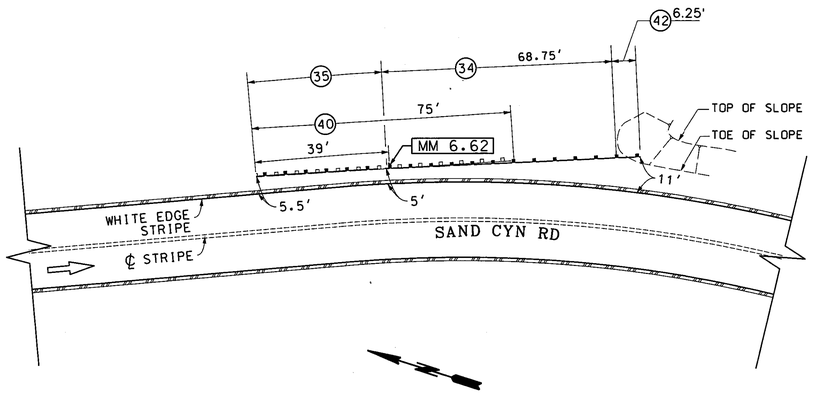

LOCATION 4

SAND CYN RD AT MM 6.62

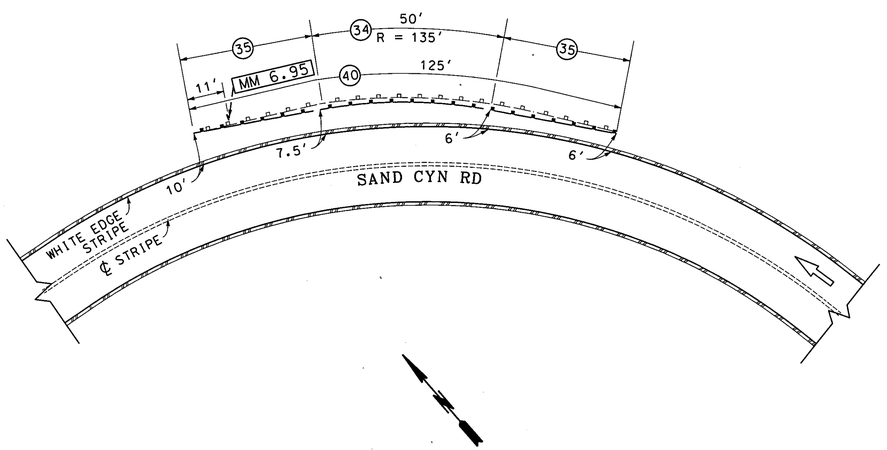

LOCATION 5

SAND CYN RD AT MM 6.95

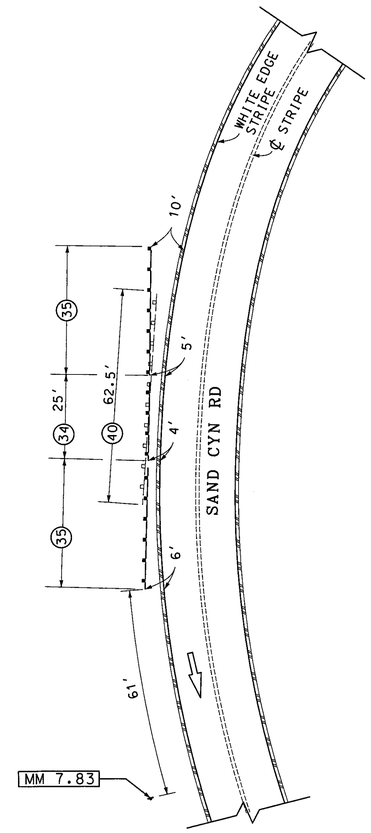

LOCATION 6

SAND CYN RD AT MM 7.83

PH085227

PLAN

SCALE: 1" = 20'

20 0 20 40

DATE	MK	DESCRIPTION

REVISIONS

REGISTERED PROFESSIONAL ENGINEER SAMUEL ORELLANA No. C 62045 CIVIL STATE OF CALIFORNIA

PROJECT ENGINEER 9-19-16 DATE

COUNTY OF LOS ANGELES DEPARTMENT OF PUBLIC WORKS

SAND CYN FIRE GUARDRAIL REPLACEMENT (2016 SANDFR)

SAND CYN RD AT MM 6.62, 6.95, & 7.83

PROJECT ID NO. RDC0016192

PCA | DWG PH085227 | SHEET 5 OF 15

PS-DH 12/10

DRAFTER J.NOORPARVAR | DESIGNER J.NOORPARVAR | CHECKER M. ORELLANA | CADD PROJECT FILE NAME RDC0016192 GROUP 2.DGN | REVIEWED BY | DATE 9-19-2016

PROPOSED FOR CONSTRUCTION: DATE | AS BUILT: DATE

DATE. $DATE$ TIME. $TIME$ FILE. $FILES$