Tract #:

Issued By: GASANCHEZ
Issued Date: 22-APR-13

Permit #: **PCFL 201300609**

Permit Office: 6

PC-CATBASI
CONSTRUCT CATCH BASIN

COUNTY OF LOS ANGELES-DPW
Department Of Public Works
Alhambra, CA 91803 - (626)458-3129

Flood Control District Permit

Individual's / Company Name	Address / City, State Zip	Work Phone	Home Phone
(APP) CITY OF CALABASAS PUBLIC WO ALEX FARASSATI	100 CIVIC CENTER WAY CALABASAS, CA 91302	818 224-1680	
(CNT) G2 CONSTRUCTION JOHN ALVARADO	13331 GARDEN GROVE BLVD., UNIT GARDEN GROVE, CA 92843	714 448-8080	

Emergency Contact

Location

Site Address:

Description: MALIBU CREEK: 156 LACFCD CATCH BASINS WITHIN CITY OF CALABASAS

Scope of Work

PERMIT PURPOSE: To authorize the work described below affecting the District catch basins in accordance with the submitted attachments, shop drawings, and catch basin identification list.

WORK DESCRIPTION: Install 156 connector pipe screens (CPS) and 156 automatic retractable screens (ARS) in District catch basins within CIty of Calabasas, per submitted shop drawings and catch basin identification list.

The proposed work shall be constructed in accordance with the conditions, provisions, and attachments provided. Permittee shall comply with the attached District maintenance and operation requirements. Work shall not start until the District has approved the contractor's insurance and Additional Insured Endorsement.

PERMITTEE MUST NOTIFY GREG GRAHAM (7:00 AM TO 3:30 PM) AT TELEPHONE (626) 447-5972 AT LEAST 5 WORKING DAYS BEFORE STARTING ANY WORK UNDER THIS PERMIT. FAILURE TO NOTIFY THE PERMIT OFFICE IS CAUSE FOR REVOCATION OF PERMIT. SHOULD PERMITTEE FAIL TO TAKE ACTION WITHIN 180 DAYS FROM DATE OF ISSUANCE OF THIS PERMIT OR FAIL TO ACTIVELY AND DILIGENTLY EXERCISE THE PRIVILEGES OF THIS PERMIT, THE PERMIT BECOMES NULL AND VOID.

ATTACHMENTS: Maintenance Agreement; (City of Calabasas) Catch Basin Identification List; Attachments A, B, & C; Appendix A-1, A-2, A-3, & A-4; Table 1 & 2 Sizing Table; CPS Shop Drawings; ARS Shop Drawings.

CC: Design (Zandieh); Flood Maintenance (West); Watershed Management (Guererro); Land Development (Office, Graham, Garcia)

SAMPLE

Permit Detail

FILE CODE NO. :	104.032
FLOOD FACILITY NAME :	DISTRICT CB'S TRIBUTARY TO MALIBU CREEK
FLOOD STATION :	VARIOUS
INSPECTION CHARGE #:	LCSR27710
INSURANCE EXPIRE	TBD
LOCATION 1:	CITY OF CALABASAS
THOMAS GUIDE :	558 & 588

Comments

EGARCIA 17-APR-13 CSR27710

Fees	Fee Code	Acount Code	Amount
PLN CHK AND INSP FLOOD PERMITS THRU CSR	PC_CSRFLD	B07_9481	$0.00
		Total Fees:	$0.00

PCFL 201300609

Report: FCDFORM

Tract #:

Permit #: **PCFL 201300609**

Issued By: GASANCHEZ
Issued Date: 22-APR-13

Permit Office: 6

Permittee is hereby permitted to perform the scope of work described above at the location described above, subject to all applicable provisions of the Flood Control Channels Ordinance (Chapter 20.94 of Title 20, Los Angeles County Code), the Flood Control District Code, and/or any municipal code or ordinance governing the area where this work is to be done. Permittee's activities in connection with this Permit shall also be subject to the provisions and conditions contained in the attachments to this Permit, which are incorporated herein. This Permit is revocable by the District if the District determines that the public interest and welfare require such revocation and shall be deemed void if the permittee is not in compliance with Section 3800 of the Labor Code.

Performance of the work of activity under this permit is tantamount to agreeing to the conditions of this permit. A copy of this permit shall be kept at the work site during the period of operation within District right of way and shall be shown to the District's representative or any law enforcement officer upon demand.

INSPECTION REQUIRED

CALL PERMIT OFFICE AT LEAST ONE (1) WORKING DAY BEFORE STARTING WORK UNDER THIS PERMIT. FAILURE TO DO SO IS CAUSE FOR REVOCATION OF THIS PERMIT. THIS PERMIT IS VOID IF WORK IS NOT STARTED WITHIN 180 DAYS FROM THE DATE OF ISSUANCE.

PERMIT OFFICE NO. 3
Westchester Office
5530 WEST 83RD STREET
WESTCHESTER, CA 90045
PHONE NO. 310-649-6300
FAX NO. 310-215-3952

SAMPLE

PCFL 201300609

Report: FCDFORM

AGREEMENT BETWEEN CITY OF CALABASAS AND LOS ANGELES COUNTY FLOOD CONTROL DISTRICT (LACFCD) FOR THE ONGOING MAINTENANCE OF LACFCD-OWNED CATCH BASINS WITH INSTALLED TRASH EXCLUDERS WITHIN THE CITY OF CALABASAS

OPTION 2

This AGREEMENT, is entered into on March 7, 2013, by and between the LOS ANGELES COUNTY FLOOD CONTROL DISTRICT, a body corporate and politic (hereinafter referred to as the LACFCD), and the CITY OF CALABASAS a municipal corporation (hereinafter referred to as CITY).

RECITALS

WHEREAS, California Regional Water Quality Control Board, Los Angeles Region, has promulgated water-quality regulations, including a Total Maximum Daily Load for Trash (Trash TMDL) for the Malibu Creek, applicable to cities located in the Malibu Creek Watershed; and

WHEREAS, CITY desires to achieve compliance with the Trash TMDL by installing TRASH EXCLUDERS (as hereafter defined) within catch basins owned by the LACFCD, located within CITY streets; and

WHEREAS, CITY will administer the procurement and installation of said TRASH EXCLUDERS;

NOW, THEREFORE, in consideration of the mutual covenants herein contained, the LACFCD and CITY hereto mutually agree as follows:

SAMPLE

(1) DEFINITION:

a. TRASH EXCLUDER, as referred to in this AGREEMENT, shall mean any device, which partially blocks the opening or outlet of a catch basin to prevent trash from entering the storm drain system, including Automatic Retractable Screen devices (ARS) and Connector Pipe Screen (CPS) devices, installed by CITY at the opening of or inside any catch basin owned by the LACFCD. Exhibit A identifies the locations of TRASH EXCLUDERS within CITY.

b. STORM SEASON, as referred to in this AGREEMENT, shall mean the period beginning October 1 and ending April 30 of each year.

c. MAJOR STORM EVENT, as referred to in this AGREEMENT, shall mean a storm with an intensity of 1 inch or more of rainfall per 12 hours, occurring within CITY. Countywide, an average storm season produces 4 major storm events.

d. DRY SEASON, as referred to in this AGREEMENT, shall mean the period beginning May 1 and ending September 30 of each year.

(2) CITY AGREES AS FOLLOWS:

a. CITY shall provide Exhibit A identifying the locations of TRASH EXCLUDERS.

b. CITY shall inspect all catch basins fitted with TRASH EXCLUDERS. If, during an inspection, CITY discovers damage to any catch basin other than damage to the TRASH EXCLUDER, CITY shall report said damage to the LACFCD within 14 calendar days from the date of the inspection.

c. CITY shall maintain all TRASH EXCLUDERS so as to function properly during storm events and so as not to prevent storm flows from entering the catch basin. CITY shall promptly repair or replace damaged TRASH EXCLUDERS.

d. CITY shall remove all trash and debris from each catch basin fitted with a TRASH EXCLUDER at least once each year. CITY shall stencil the appropriate month and year of cleanout on each catch basin.

e. CITY shall be authorized to remove the existing manhole covers as required to access the inside of the catch basins fitted with TRASH EXCLUDERS and shall reinstall the manhole covers wherever the catch basins are left unattended. Damaged screws and bolts shall be replaced. CITY shall thoroughly clean all debris from the manhole frame and cover.

f. CITY shall patrol areas in which any TRASH EXCLUDERS have been installed, during storm events, to verify that all TRASH EXCLUDERS are functioning properly, and shall relieve any instances of plugging of any catch basin fitted with a TRASH EXCLUDER.

g. CITY shall indemnify, defend, and hold the LACFCD and the County of Los Angeles, and their agents, officers, and employees, harmless from and against any and all claims, demands, liability, damages or costs arising from the breach by CITY of any obligation under this Agreement, or from the installation, operation or maintenance of any TRASH EXCLUDER.

h. CITY shall include the LACFCD within the protection of any indemnification clause contained in any ancillary contract relating to the TRASH EXCLUDERS.

//
//
//
//

SAMPLE

(3) LACFCD AGREES AS FOLLOWS:

a. To permit CITY to utilize catch basins owned by the LACFCD and located within CITY, as identified in Exhibit A, for the purpose of installing, operating, and maintaining TRASH EXCLUDERS.

b. To pay CITY the amount of $15.25 in 2012 dollars, adjusted annually according to the Consumer Price Index for all urban consumers in the Anaheim, Los Angeles, and Riverside areas, as published by the U.S. Government Bureau of Labor Statistics, per year, for each catch basin identified in Exhibit A. This amount represents the annual amount the LACFCD would otherwise have had to incur for removing trash and debris from the catch basins identified in Exhibit A, had CITY not installed TRASH EXCLUDERS in those catch basins.

(4) IT IS MUTUALLY UNDERSTOOD AND AGREED AS FOLLOWS:

a. The TRASH EXCLUDERS are the property of CITY. The LACFCD shall retain ownership of the catch basins, exclusive of the TRASH EXCLUDERS.

b. Termination

(i) CITY may request the LACFCD to perform the inspection and maintenance of the TRASH EXCLUDERS, or any of them, on CITY's behalf. If the LACFCD, in its sole discretion, determines to do so, the parties shall enter into a new agreement providing for said inspection and maintenance by the LACFCD, on CITY's behalf. Upon the execution of the new agreement by both CITY and the LACFCD, this AGREEMENT shall be deemed terminated.

(ii) CITY may unilaterally terminate this AGREEMENT without cause, in CITY'S sole discretion, at any time, by giving a thirty (30)-day prior written notice to the LACFCD. In the event this AGREEMENT is terminated, pursuant to this Section (4)b.(ii), the LACFCD may, in its sole discretion, provide CITY with a written notice to remove the TRASH EXCLUDERS or any of them, and restore the affected catch basin(s) to a condition similar to or better than that which existed prior to installation of the TRASH EXCLUDERS. If the LACFCD provides CITY with such a notice, CITY shall complete all work required to comply with the notice within ninety (90) days. If CITY fails to do so, the LACFCD may, in its sole discretion, complete said work at CITY'S expense.

SAMPLE

(iii) If CITY fails to comply with any of the terms or conditions of this AGREEMENT, the LACFCD may, in its sole discretion, terminate this AGREEMENT and provide CITY with a written notice to remove the TRASH EXCLUDERS, or any of them, and restore the catch basin(s) to a condition similar to or better than that which existed prior to installation of the TRASH EXCLUDERS. If the LACFCD provides CITY with such a notice, CITY shall complete all work required to comply with the notice within ninety (90) days. If CITY fails to do so, the LACFCD may, in its sole discretion, complete said work at CITY'S expense.

(iv) If the LACFCD removes any TRASH EXCLUDER pursuant to Sections (4)b.(ii) or (4)b.(iii), the LACFCD shall submit a billing invoice to CITY indicating the costs and expenses incurred by the LACFCD in connection with the removal of the TRASH EXCLUDER, specifically including any work required to restore the affected catch basin to a condition similar or better than that which existed prior to installation of the TRASH EXCLUDER, and CITY shall reimburse the LACFCD all such costs and expenses within thirty (30) days of the billing invoice.

c. The LACFCD is not responsible for assisting CITY with any regulatory compliance activities related to the operation or maintenance of the TRASH EXCLUDERS including, for example, conducting monitoring, weighing of trash, and reporting amounts of trash collected from inside catch basins where TRASH EXCLUDERS have been installed.

d. Requests for Service coming to the LACFCD to clean any catch basin identified in Exhibit A will be forwarded to CITY for their prompt handling, action, and closure.

e. The LACFCD may remove any TRASH EXCLUDER, if the LACFCD determines, in its reasonable discretion, that removal of the TRASH EXCLUDER is necessary to prevent or mitigate flooding of any public or private property. CITY expressly releases the LACFCD from, and waives, all claims for any damages, loss, costs, or expenses resulting from the LACFCD'S removal of any TRASH EXCLUDER pursuant to this section. In such case, CITY may thereafter reinstall the TRASH EXCLUDER only after first consulting with the LACFCD with regards to the reasons for the removal. If CITY thereafter chooses to reinstall the TRASH EXCLUDER, it must do so at its sole expense.

f. This AGREEMENT may be modified only by the mutual written consent of both parties.

SAMPLE

g. This AGREEMENT contains the complete and final understanding of the parties in connection with the subject matter herein and shall supersede any and all previous contemporaneous oral or written agreements between the parties regarding said subject matter.

h. The provisions of this AGREEMENT shall be interpreted and enforced pursuant to the laws of the State of California.

i. Any correspondence, communication, or contact concerning this AGREEMENT, shall be directed to the following:

CITY:

City of Calabasas
100 Civic Center Way
Calabasas, CA 91302
Attn: Alex Farassati
Environmental Services Supervisor
Telephone: (818) 224-1680
Fax: (818) 225-7335

LACFCD:

Mr. Gary Hildebrand
County of Los Angeles
Department of Public Works
Watershed Management Division, 11th Floor
P.O. Box 1460
Alhambra, CA 91802-1460
Telephone: (626) 458-4300
Fax: (626) 457-1526
For emergencies, contact 626-458-HELP (4337)

SAMPLE

//
//
//
//
//
//
//
//
//
//

IN WITNESS WHEREOF, the parties hereto have caused this AGREEMENT to be duly executed by their respective duly authorized officers, by the CITY OF CALABASAS on MARCH 7, 2013, and by the LOS ANGELES COUNTY FLOOD CONTROL DISTRICT, on _____, 2013.

LOS ANGELES COUNTY FLOOD CONTROL DISTRICT, a body corporate and politic

By _____
Chief Engineer

APPROVED AS TO FORM:

JOHN F. KRATTLI
County Counsel

By _____
Deputy

CITY OF CALABASAS:

By _____
Anthony Coroalles, City Manager

ATTEST:

By: _____
Maricela Hernandez, City Clerk

APPROVED AS TO FORM:

By _____
Scott Howard, Interim City Attorney

SAMPLE

RJG:sw
P:\wmpub\Secretarial\2012 Documents\Board Letters\Catch Basin\Option 2.docx

Exhibit A

No	Street	Nearest Cross Street	Side Location	Closest Street Address	Coordinates X	Coordinates Y
1	Lost Hills Rd.	Las Virgenes Rd	Southside	3701	34°07.627	118°42.440
2	Lost Hills Rd.	Las Virgenes Rd	Center Median	3701	34°07.630	118°42.434
3	Lost Hills Rd.	Las Virgenes Rd	Northside	3701	34°07.636	118°42.428
4	Lost Hills Rd.	Meadow Creek Ln.	Northside		34°07.767	118°42.486
5	Lost Hills Rd.	Meadow Creek Ln.	Median		34°07.766	118°42.493
6	Lost Hills Rd.	Meadow Creek Ln	Southside		34°07.765	118°42.503
7	Lost Hills Rd	Meadow Creek Ln	Northside		34°07.764	118°42.505
8	Lost Hills Rd	Cold Springs	Southside		34°07.904	118°42.478
9	Lost Hills Rd	Cold Springs	Northside		34°08.026	118°42.423
10	Lost Hills Rd	Meadow Creek Ln	Southside		34°07.904	118°42.478
11	Lost Hills Rd	Meadow Creek Ln	Northside		34°07.874	118°42.469
12	Lost Hills Rd	Steeplechase	Northside	4240	34°08.107	118°42.416
13	Lost Hills Rd	Steeplechase	Southside	4240	34°08.110	118°42.431
14	Lost Hills Rd	Malibu Hills Rd	Northside	4240	34°08.249	118°42.447
15	Lost Hills Rd	Malibu Hills Rd	Southside		34°08.245	118°42.834
16	Agoura Rd	Malibu Hills Rd	Southside	27001	34°08.289	118°42.826
17	Agoura Rd	Malibu Hills Rd	Northside	27050	34°08.277	118°42.838
18	Agoura Rd	Malibu Hills Rd	Northside	27050	34°08.281	118°42.829
19	Agoura Rd		Northside	26801	34°08.306	118°42.668
20	Agoura Rd		Northside	26801	34°08.312	118°42.648
21	Agoura Rd		Northside	26801	34°08.317	118°42.628
22	Agoura Rd		Northside	26850	34°08.299	118°42.642
22	Agoura Rd		Southside	26610	34°08.494	118°42.209
24	Agoura Rd		Northside	26601	34°08.508	118°42.213
25	Agoura Rd		Northside	26601	34°08.513	118°42.209
26	Agoura Rd	Las Virgenes Rd	Southside	26500	34°08.628	118°42.002
27	Agoura Rd	Las Virgenes Rd	Northside	26521	34°08.643	118°41.997
28	Mureau Rd	Las Virgenes Rd	Southside	26025	34°09.147	118°41.783
29	Mureau Rd	Las Virgenes Rd	Northside	26025	34°09.148	118°41.705
30	Mureau Rd	Las Virgenes Rd	Northside	26135	34°09.156	118°41.820
31	T.O. Blvd	Las Virgenes Rd	Southside		34°09.617	118°42.105
32	T.O. Blvd	Las Virgenes Rd	Northside		34°09.624	118°42.120
33	T.O. Blvd	Las Virgenes Rd	Southside		34°09.632	118°42.062

SAMPLE

No	Street	Nearest Cross Street	Side Location	Closest Street Address	Coordinates X	Coordinates Y
34	T.O. Blvd	Ruthwood Dr	Eastside		34°09.638	118°41.985
35	T.O. Blvd	Parkmore	Median		34°09.591	118°41.825
36	T.O. Blvd	Parkmore	Northside		34°09.606	118°41.838
37	T.O. Blvd	Parkmore	Median		34°09.562	118°41.710
38	T.O. Blvd	Parkmore	Northside		34°09.566	118°41.711
39	Las Virgenes Rd	L.V. Open space	Eastside	6002 N. Las Virgenes Rd	34°10.073	118°42.166
40	Las Virgenes Rd	n/a	Eastside	5940 N. Las Virgenes Rd	34°09.989	118°42.158
41	Las Virgenes Rd	T.O. Blvd	Eastside		34°09.631	118°42.145
42	Las Virgenes Rd	T.O. Blvd	Median		34°09.625	118°42.148
43	Las Virgenes Rd	T.O. Blvd	Westside		34°09.620	118°42.158
44	Las Virgenes Rd	T.O. Blvd	Median		34°09.625	118°42.148
45	Las Virgenes Rd	T.O Blvd	Eastside		34°09.673	118°42.158
46	Las Virgenes Rd	T.O Blvd	Median		34°09.672	118°42.164
47	Las Virgenes Rd	Mont Calabasas Drive	Median	5758 N Las Virgenes Rd	34°09.741	118°42.169
48	Las Virgenes Rd	Mont Calabasas Drive	Median	5758 N Las Virgenes Rd	34°09.741	118°42.169
49	Las Virgenes Rd	Saddle Ridge	Eastside		34°09.437	118°42.007
50	Las Virgenes Rd	Fire station	Westside		34°09.074	118°41.838
51	Las Virgenes Rd	Fire station	Eastside		34°09.009	118°41.862
52	Las Virgenes Rd	Fire station	Median		34°09.074	34°09.074
53	Las Virgenes Rd	101 Freeway	Eastside		34°08.961	118°41.872
54	Las Virgenes Rd	101 Freeway	Median		34°08.811	118°864
55	Las Virgenes Rd	101 Freeway Onramp	Eastside		34°08.757	118°41.868
56	Las Virgenes Rd		Westside	4937 LV	34°08.818	118°41.875
57	Las Virgenes Rd		Westside	4937 LV Rd	34°08.794	118°41.881
58	Las Virgenes Rd		Westside	4937 LV Rd	34°08.790	118°41.882
59	Las Virgenes Rd	Agoura Rd.	Westside		34°08.592	118°41.927
60	Las Virgenes Rd	Colony Gate	Eastside		34°08.537	118°41.959
61	Las Virgenes Rd	La Paz	Eastside		34°08.499	118°41.997
62	Las Virgenes Rd	Lost Hills Rd.	Eastside		34°07.614	118°42.273
63	Las Virgenes Rd	AE Wright	Eastside		34°08.077	118°42.163
64	Las Virgenes Rd	AE Wright	Eastside		34°08.040	118.42.172
65	Parkmor	L.V. Rd.	Southside		34°09.212	118°41.814
66	Parkmor	L.V. Rd	Northside		34°09.216	118°41.817
67	Parkmor	T.O. Blvd	Westside		34°09.580	118°41.727
68	Parkmor	T.O. Blvd	Eastside		34°09.577	118°41.721
69	Parkmor	T.O. Blvd	Eastside		34°09.582	118°41.720

SAMPLE

No	Street	Nearest Cross Street	Side Location	Closest Street Address	Coordinates X	Coordinates Y
70	Alizia Canyon	Ruthwood	Northside	26200	34°09.844	118°42.015
71	Alizia Canyon	Ruthwood	Southside	26200	34°09.838	118°42.012
72	Alizia Canyon	Parkmore	Southside		34°09.855	118°41.981
73	Aliza Canyon	Parkmore	Northside		34°09.875	118°41.971
74	Aliza Canyon	Condos	Southside		34°09.909	118°41.910
75	Aliza Canyon	Condos	Southside		34°09.926	118°41.875
76	Aliza Canyon	Condos	Northside		34°09.911	118°41.917
77	Adamor	Parkmor	Westside		34°09.714	118°41.910
78	Adamor	Parkmor	Westside		34°09.709	118°41.917
79	Adamor	Parkmor	Westside		34°09.705	118°41.918
80	Adamor	Parkmor	Eastside		34°09.701	118°41.914
81	Adamor	Parkmor	Eastside		34°09.704	118°41.911
82	Adamor	Parkmor	Eastside		34°09.709	118°41.906
83	Ruthwood	Alizia Cyn	Westside	5908	34°09.850	118°42.027
84	Ruthwood	Alizia Cyn	Eastside		34°09.851	118°42.021
85	Ruthwood	T.O. Blvd	Eastside		34°09.665	118°42.955
86	Ruthwood	T.O. Blvd	Eastside		34°09.656	118°41.994
87	Ruthwood	T.O. Blvd	Westside		34°09.659	118°42.003
88	Ruthwood	Roymor	Westside	5509	34°09.420	118°42.875
89	Ruthwood	Roymor	Eastside	5510	34°09.421	118°42.870
90	Ruthwood	Hatmor	Westside	5569	34°09.503	118°41.937
91	Ruthwood	Roymor Dr	Eastside	5524	34°09.436	118°41.879
92	Ruthwood	Hatmor	Eastside	5612	34°09.518	118°41.939
93	Roymor	Ruthwood	Eastside		34°09.433	118°42.872
94	Edgeware	De Berry	Southside	5207	34°68.647	118°42.725
95	Edgeware	De Berry	Northside	26900	34°08.640	118°42.720
96	De Berry	Ambridge	Southside		34°08.600	118°42.850
97	De Berry	Ambridge	Southside		34°08.598	118°42.853
98	De Berry	Ambridge	Northside		34°08.612	118°42.829
99	De Berry	Ambridge	Northside	27001	34°08.605	118°42.851
100	Helmond	Ambridge	Southside	27019	34°08.546	118°42.854
101	Helmond	Ambridge	Northside	27014	34°08.540	118°42.854
102	Helmond	Parkville	Northside	26909	34°08.590	118°42.687
103	Canwood	Ambridge	Northside		34°08.404	118°42.826
104	Ambridge	Canwood	Westside	5001	34°08.412	118°42.816
105	Canwood	Ambridge	Northside		34°08.413	118°42.795

SAMPLE

No	Street	Nearest Cross Street	Side Location	Closest Street Address	Coordinates X	Coordinates Y
106	Garret Dr.	Ambridge	Southside		34°08.449	118°42.812
107	Garret Dr.	Ambridge	Southside		34°08.454	118°42.809
108	Parville	Canwood	Westside		34°08.488	118°42.677
109	Ambridge	Garret	Eastside		34°08.458	118°42.817
110	Dantes View Dr.	End	Southside	5002	34°08.422	118°42.932
111	Malibu Hills	Lost Hills	Southside		34°08.214	118°42.502
112	Malibu Hills	Lost Hills	Northside		34°08.224	118°42.502
113	Malibu Hills	Calabasas Hills	Northside		34°08.198	118°42.616
114	Malibu Hills	Calabasas Hills	Southside		34°08.187	118°42.613
115	Malibu Hills	Calabasas Hills	Southside		34°08.185	118°42.619
116	Malibu Hills	Lost Hills	Northside		34°08.241	118°42.429
117	Malibu Hills	Lost Hills	Northside		34°08.244	118°42.429
118	Malibu Hills	Lost Hills	Southside		34°08.235	118°42.430
119	Malibu Hills	Lost Hills	Eastside	26950 Agoura Road	34°08.192	118°42.729
120	Malibu Hills	Lost Hills	Westside	27040 Malibu Hills	34°08.189	118°42.760
121	Calabasas Hills	Lost Hills	Southside		34°07.752	118°42.505
122	Calabasas Hills	Lost Hills	Northside		34°07.757	118°42.509
123	Calabasas Hills	Lost Springs	Northside		34°07.765	118°42.552
124	Calabasas Hills	Peacock Ridge	Westside		34°08.865	118°42.644
125	Calabasas Hills	N/A	Westside		34°08.045	118°42.653
126	Calabasas Hills	N/A	Southside		34°08.043	118°42.647
127	Calabasas Hills	Cold Springs St.	Westside		34°08.104	118°42.602
128	Shadow Hills Rd.	The End			34°08.074	118°42.712
129	Shadow Hills Rd	Malibu Hills	Southside		34°08.176	118°42.746
130	Shadow Hills Rd	Malibu Hills	Northside		34°08.183	118°42.753
131	Lost Springs Dr.	Calabasas Hills	Eastside		34°07.778	118°42.534
132	Lost Springs Dr.	Calabasas Hills	Westside		34°07.770	118°42.540
133	Lost Springs Dr.	Cottonwood Grove	Eastside		34°07.821	118°42.530
134	Lost Springs Dr.	Cottonwood Grove	Eastside		34°07.833	118°42.527
135	Lost Springs Dr.	Cottonwood Grove	Westside		34°07.836	118°42.534
136	Cottonwood Grove	Lost Springs	Northside		34°07.833	118°42.545
137	Raven Ct	Cotton Wood Grove			34°07.825	118°42.565
138	Cottonwood Grove	Raven Ct	Southside		34°07.832	118°42.571
139	Lost Springs Dr.	Cottonwood Grove	Westside		34°07.842	118°42.533
140	Lost Springs Dr.	Cold Springs	Westside		34°08.047	118°42.470
141	Lost Springs Dr.	Cold Springs	Eastside	4102	34°08.048	118°42.464

SAMPLE

No	Street	Nearest Cross Street	Side Location	Closest Street Address	Coordinates X	Coordinates Y
142	Lost Springs Dr.	Cold Springs	Eastside	4106	34°08.055	118°42.464
143	Cottonwood Grove	Lost Springs	Southside	4050	34°09.062	118°42.905
144	Cottonwood Grove	Lost Springs	Northside	4043	34°07.999	118°42.501
145	Cottonwood Grove	Lost Springs	Southside	4044	34°07.996	118°42.500
146	Lost Springs	Cold Springs	Eastside	4040	34°08.024	118°42.470
147	Lost Springs	Cold Springs	Eastside		34°08.029	118°42.476
148	Lost Springs	Cottonwood Grve	Westside		34°08.005	118°42.484
149	Cold Springs	Lost Hills	Northside		34°08.036	118°42.449
150	Cold Springs	Lost Springs	Southside		34°08.033	118°42.486
151	Cold Springs	Arroyo Willow	Southside		34°08.055	118°42.470
152	Cold Springs	Lost Springs	Northside		34°08.040	118°42.486
153	Cold Springs	Arroyo Willow Ln	Northside		34°08.075	118°42.548
154	Arroyo Willow Ln	Cold Springs	Westside		34°08.084	118°42.529
155	Arroyo Willow L.	Cold Springs	Eastside		34°08.078	118°42.525
156	Arroyo Willow Ln	Cold Springs	Westside	4103	34°08.078	118°42.531
157	Redbluff	Parkmor	Eastside		34°09.217	118°42.747
158	Redbluff	Parkmor	Westside		34°09.214	118°42.750
159	Oakglen	N/A	Westside	4325	34°08.302	118°42.131
160	Oakglen	N/A	Eastside	4318	34°08.308	118°42.128
161	Willow Glen	Oakglen	Eastside	4391	34°08.376	118°42.045
162	Willow Glen	Oakglen	Westside	4392	34°08.379	118°42.050
163	Willow Glen	Oakglen	Southside	4327	34°08.300	118°42.171
164	Willow Glen	Oakglen	Northside	4328	34°08.305	118°42.168
165	Meadow Creek Ln	Lost Hills Rd	Eastside		34°07.759	118°42.452
166	Meadow Creek Ln	Lost Hills Rd	Westside		34°07.762	118°42.471
167	Meadow Creek Ln	Lost Hills Rd	Westside		34°07.763	118°42.453
168	Meadow Creek Ln	Lost Hills Rd	Eastside		34°07.755	118°42.472
169	Orchid Ln	Meadow Creek Ln.	Northside		34°07.758	118°42.428
170	Lupine Ln	Meadow Creek Ln.	Southside		34°07.782	118°42.380
171	Lupine Ln	Meadow Creek Ln.	Northside		34°07.787	118°42.373
172	Lupine Ln	Meadow Creek Ln.	Southside		34°07.795	118°42.383
173	Lupine Ln	Meadow Creek Ln.	Northside		34°07.897	118°42.388
174	Ceanothus Place	Meadow Creek Ln.	Westside		34°07.834	118°42.327
175	Ceanothus Place	Meadow Creek Ln.	Eastside		34°07.833	118°42.324
176	Poppyseed Ln	Meadow Creek Ln.	Eastside		34°07.763	118°42.278
177	Poppyseed Ln	Meadow Creek Ln.	Westside		34°07.837	118°42.277

SAMPLE

No	Street	Nearest Cross Street	Side Location	Closest Street Address	Coordinates X	Coordinates Y
178	Poppyseed Ln	Meadow Creek Ln.	Eastside		34°07.835	118°42.271
179	Poppyseed Ln	Meadow Creek Ln.	Eastside		34°07.844	118°42.272
180	Poppyseed Ln	Meadow Creek Ln.	Westside		34°07.850	118°42.278

SAMPLE

CITY OF CALABASAS

DEVICE TO BE INSTALLED	CATCH BASIN ID	NO.	OWNED BY	PRIORITY	STREET	NEAREST CROSS STREET	LOCATION OF CORNER	ADDRESS	T.G.	CATCH BASIN WIDTH (FT)	OUTLET PIPE SIZE (IN)	OUTLET PIPE LOCATION	COMMERCIAL OR INDUSTRY AREA	TYPE OF CATCH BASIN
CPS & ARS	1117	001	COUNTY		LAS VIRGENES RD	MONT CALABASAS DR	NE	6002, BLD#62	558-H3	14	18	6		300-2
CPS & ARS	1117	002	COUNTY		LAS VIRGENES RD	MONT CALABASAS DR	NE	5940, BLD#50	558-H3	21	18	6		300-2
CPS & ARS	1117	010	COUNTY		LAS VIRGENES RD	MONT CALABASAS DR	NE	5736	558-H3	21	18	6		300-2
CPS & ARS	1117	XXX	COUNTY		LAS VIRGENES RD	THOUSAND OAKS BLVD	CNE	ACROSS CB 1117010	558-H4	2	18	7		300-2
CPS & ARS	1117	012	COUNTY		ADAMOR RD	PARKMOR RD	NW	26273	558-H3	7	24	2		301-2
CPS & ARS	1117	013	COUNTY		ADAMOR RD	PARKMOR RD	NW2	26273	558-H3	7	24	2		301-2
CPS & ARS	1117	014	COUNTY		ADAMOR RD	PARKMOR RD	NW3	26273	558-H3	11.5	18	2		301-2
CPS & ARS	1117	015	COUNTY		ADAMOR RD	PARKMOR RD	NE	ACROSS CB 1117012	558-H3	7	24	5		301-2
CPS & ARS	1117	016	COUNTY		ADAMOR RD	PARKMOR RD	NE2	ACROSS CB 1117013	558-H3	7	24	6		301-2
CPS & ARS	1117	017	COUNTY		ADAMOR RD	PARKMOR RD	NE3	ACROSS CB 1117014	558-H3	15	24	6		301-2
CPS & ARS	1117	018	COUNTY		ALIZIA CANYON DR	PARKMOR RD	SE		558-H3	14	18	4		300-2
CPS & ARS	1117	019	COUNTY		ALIZIA CANYON DR	PARKMOR RD	NE	ACROSS 26272	558-H3	7	18	4		300-2
CPS & ARS	1117	020	COUNTY		ALIZIA CANYON DR	RUTHWOOD DR	SE		558-H3	7	18	4		300-2
CPS & ARS	1117	021	COUNTY		ALIZIA CANYON DR	RUTHWOOD DR	NE		558-H3	7	18	4		300-2
CPS & ARS	1117	022	COUNTY		RUTHWOOD DR	ALIZIA CANYON DR	NE		558-H3	12	18	4		301-2
CPS & ARS	1117	023	COUNTY		RUTHWOOD DR	ALIZIA CANYON DR	NW		558-H3	12	24	1		301-2
CPS & ARS	1117	024	COUNTY		ALIZIA CANYON DR	PARKMOR RD	SE2	26214	558-H3	14	18	4		300-2
CPS & ARS	1117	025	COUNTY		ALIZIA CANYON DR	PARKMOR RD	NE2	ACROSS 26214	558-H3	14	18	4		300-2
CPS & ARS	1117	028	COUNTY		RUTHWOOD DR	THOUSAND OAKS BLVD	NW		558-H3	7	18	2		301-2
CPS & ARS	1117	029	COUNTY		RUTHWOOD DR	THOUSAND OAKS BLVD	NE2		558-H3	7	18	6		300-2
CPS & ARS	1117	030	COUNTY		RUTHWOOD DR	THOUSAND OAKS BLVD	NE		558-H3	3.5	18	4		300-2
CPS & ARS	1117	031	COUNTY		THOUSAND OAKS BLVD	RUTHWOOD DR	SE		558-H4	12	18	4		301-2
CPS & ARS	1117	032	COUNTY		RUTHWOOD DR	HATMOR DR	NE		558-H4	14	24	5		300-2
CPS & ARS	1117	035	COUNTY		THOUSAND OAKS BLVD	LAS VIRGENES RD	NE		558-H4	3.5	18	4		300-2
CPS & ARS	1117	036	COUNTY		LAS VIRGENES RD	THOUSAND OAKS BLVD	NE		558-H4	21	18	6		300-2
CPS & ARS	1117	XXX	COUNTY		LAS VIRGENES RD	THOUSAND OAKS BLVD	CNE	ACROSS CB 1117036	558-H4	7	18	2		300-2
CPS & ARS	1117	XXX	COUNTY		LAS VIRGENES RD	THOUSAND OAKS BLVD	CNW	ACROSS CB 1117036	558-H4	7	18	6		300-2
CPS & ARS	1117	XXX	COUNTY		LAS VIRGENES RD	THOUSAND OAKS BLVD	NW	ACROSS CB 1117036	558-H4	3.5	18	2		300-2
CPS & ARS	1117	037	COUNTY		THOUSAND OAKS BLVD	LAS VIRGENES RD	SE		558-H4	21	24	4		300-2
CPS & ARS	1117	038	COUNTY		THOUSAND OAKS BLVD	RUTHWOOD DR	SW	AT PD 1522 GATE	558-H4	7	18	6		300-2
CPS & ARS	1117	043	COUNTY		RUTHWOOD DR	HATMOR DR	SW	5603	558-H4	14	30	8		300-2
CPS & ARS	1117	045	COUNTY		RUTHWOOD DR	ROYMOR DR	NE	5524	558-H4	7	18	6		300-2
CPS & ARS	1117	046	COUNTY		ROYMOR DR	RUTHWOOD DR	NE		558-H4	7	18	2		300-2
CPS & ARS	1117	047	COUNTY		RUTHWOOD DR	ROYMOR DR	SE	5510	558-H4	7	24	4		300-2
CPS & ARS	1117	048	COUNTY		RUTHWOOD DR	ROYMOR DR	SW	5509	558-H4	7	24	8		300-2
CPS & ARS	1117	050	COUNTY		LAS VIRGENES RD	SADDLERIDGE LN	SE		558-H4	14	24	8		300-2
CPS & ARS	1117	054	COUNTY		PARKMOR RD	LAS VIRGENES RD	SE	5304	558-H4	14	26	4		300-2
CPS & ARS	1117	055	COUNTY		PARKMOR RD	LAS VIRGENES RD	NE	ACROSS 5304	558-H4	14	26	4		300-2
CPS & ARS	1117	058	COUNTY		LAS VIRGENES RD	MUREAU RD	SW	5215	558-H5	7	18	4		300-2
CPS & ARS	1118	001	COUNTY		DE BERRY DR	EDGEWARE DR	SE	26900	558-G6	14	24	8		300-2
CPS & ARS	1118	002	COUNTY		EDGEWARE DR	DE BERRY DR	NW	5207	558-G6	10	18	4		300-2
CPS & ARS	1118	003	COUNTY		HELMOND DR	PARKVILLE RD	NW	26909	558-G6	3.5	18	8		300-2
CPS & ARS	1118	004	COUNTY		PARKVILLE RD	CANWOOD ST	NW		558-G6	7	48	4		300-2
CPS & ARS	1118	016	COUNTY		WILLOW GLEN ST	OAK GLEN ST	NW	4392	558-H6	3.5	18	4		300-2
CPS & ARS	1118	017	COUNTY		WILLOW GLEN ST	OAK GLEN ST	NE	4391	558-H6	3.5	16	4		300-2
CPS & ARS	1118	018	COUNTY		OAK GLEN ST	WILLOW GLEN ST	NE	4318	558-H6	3.5	18	4		300-2
CPS & ARS	1118	019	COUNTY		OAK GLEN ST	WILLOW GLEN ST	NW	ACROSS 4318	558-H6	3.5	18	4		300-2
CPS & ARS	1118	020	COUNTY		WILLOW GLEN ST	OAK GLEN ST	NW	4328	558-H6	7	18	4		300-2
CPS & ARS	1118	021	COUNTY		WILLOW GLEN ST	OAK GLEN ST	SW	4329	558-H6	7	18	2		300-2
CPS & ARS	1118	030	COUNTY		DE BERRY DR	AMBRIDGE DR	NE		558-F6	15	18	4		300-2
CPS & ARS	1118	031	COUNTY		DE BERRY DR	AMBRIDGE DR	SE	26960	558-F6	7	20	6		300-2
CPS & ARS	1118	034	COUNTY		DE BERRY DR	AMBRIDGE DR	SW	27000	558-F6	21	36	1		300-2
CPS & ARS	1118	035	COUNTY		DE BERRY DR	AMBRIDGE DR	NW	27001	558-F6	21	24	8		300-2
CPS & ARS	1118	036	COUNTY		HELMOND DR	AMBRIDGE DR	NW	27019	558-F6	7	18	11		300-2
CPS & ARS	1118	037	COUNTY		HELMOND DR	AMBRIDGE DR	SW	27014	558-F6	14	18	10		300-2

SAMPLE

CITY OF CALABASAS

DEVICE TO BE INSTALLED	CATCH BASIN ID	NO.	OWNED BY	PRIORITY	STREET	NEAREST CROSS STREET	LOCATION OF CORNER	ADDRESS	T.G.	CATCH BASIN WIDTH (FT)	OUTLET PIPE SIZE (IN)	OUTLET PIPE LOCATION	COMMERCIAL OR INDUSTRY AREA	TYPE OF CATCH BASIN
CPS & ARS	1118	038	COUNTY		GARRET DR	AMBRIDGE DR	NE	26945	558-G6	7	18	4		300-2
CPS & ARS	1118	039	COUNTY		GARRET DR	AMBRIDGE DR	SE	26952	558-G6	7	24	6		300-2
CPS & ARS	1118	040	COUNTY		AMBRIDGE DR	GARRET DR	NE	ACROSS 5037	558-G6	7	18	4		300-2
CPS & ARS	1118	041	COUNTY		CANWOOD ST	AMBRIDGE DR	NE		558-G6	7	18	6		300-2
CPS & ARS	1118	043	COUNTY		AMBRIDGE DR	CANWOOD ST	NW	5001	558-F6	14	18	2		300-2
CPS & ARS	1118	044	COUNTY		CANWOOD ST	AMBRIDGE DR	NW		558-F6	14	24	6		300-2
CPS & ARS	1118	045	COUNTY		DANTES VIEW DR	HELMOND DR	SE	5002	558-F6	7	18	8		300-2
CPS & ARS	1118	112	COUNTY		POPPYSEED PL	MEADOW CREEK LN	NW2	3909	588-H1	14	18	4		300-2
CPS & ARS	1118	113	COUNTY		POPPYSEED PL	MEADOW CREEK LN	NW	3903	588-H1	7	18	4		300-2
CPS & ARS	1118	114	COUNTY		POPPYSEED PL	MEADOW CREEK LN	NE2		588-H1	14	18	6		300-2
CPS & ARS	1118	115	COUNTY		POPPYSEED PL	MEADOW CREEK LN	NE		588-H1	3.5	18	4		300-2
CPS & ARS	1118	116	COUNTY		CEANOTHUS PL	MEADOW CREEK LN	NE		588-G1	7	18	6		300-2
CPS & ARS	1118	117	COUNTY		CEANOTHUS PL	MEADOW CREEK LN	NW		588-G1	7	18	2		300-2
CPS & ARS	1118	119	COUNTY		POPPYSEED PL	MEADOW CREEK LN	SE		588-H1	7	18	4		300-2
CPS & ARS	1118	121	COUNTY		OLEANDER CT	MEADOW CREEK LN	NE		588-G1	7	18	6		300-2
CPS & ARS	1118	122	COUNTY		OLEANDER CT	MEADOW CREEK LN	NW		588-G1	3.5	18	2		300-2
CPS & ARS	1118	123	COUNTY		LUPINE LN	MEADOW CREEK LN	SE		588-G1	7	18	4		300-2
CPS & ARS	1118	124	COUNTY		LUPINE LN	MEADOW CREEK LN	SW		588-G1	7	18	4		300-2
CPS & ARS	1118	125	COUNTY		ORCHID LN	MEADOW CREEK LN	SE		588-G1	7	18	2		300-2
CPS & ARS	1118	126	COUNTY		LOST HILLS RD	EL ENCANTO DR	CNE	ACROSS 3701	588-G1	7	18	2		300-2
CPS & ARS	1118	127	COUNTY		LOST HILLS RD	EL ENCANTO DR	NE	3701	588-G1	7	24	8		300-2
CPS & ARS	1118	128	COUNTY		LOST HILLS RD	EL ENCANTO DR	NW	ACROSS 3701	588-G1	7	18	4		300-2
CPS & ARS	1118	129	COUNTY		CALABASAS HILLS RD	LOST HILLS RD	SW		588-G1	3.5	18	4		300-2
CPS & ARS	1118	130	COUNTY		CALABASAS HILLS RD	LOST HILLS RD	NW		588-G1	7	29	4		300-2
CPS & ARS	1118	132	COUNTY		CALABASAS HILLS RD	LOST SPRINGS DR	NW	3805	588-G1	7	2	5		301-2
CPS & ARS	1118	133	COUNTY		CALABASAS HILLS RD	LOST SPRINGS DR	NE	3806	588-G1	10	18	4		300-2
CPS & ARS	1118	134	COUNTY		LOST HILLS RD	MEADOW CREEK LN	NW		588-G1	7	18	4		300-2
CPS & ARS	1118	135	COUNTY		LOST HILLS RD	MEADOW CREEK LN	CNW		588-G1	3.5	18	6		300-2
CPS & ARS	1118	136	COUNTY		LOST HILLS RD	MEADOW CREEK LN	NE		588-G1	14	18	6		300-2
CPS & ARS	1118	137	COUNTY		MEADOW CREEK LN	LOST HILLS RD	NE		588-G1	7	18	4		300-2
CPS & ARS	1118	138	COUNTY		MEADOW CREEK LN	ORCHID LN	NW		588-G1	3.5	18	4		300-2
CPS & ARS	1118	139	COUNTY		MEADOW CREEK LN	LOST HILLS RD	SE		588-G1	7	18	8		300-2
CPS & ARS	1118	140	COUNTY		MEADOW CREEK LN	ORCHID LN	SW		588-G1	7	18	4		300-2
CPS & ARS	1118	141	COUNTY		COTTONWOOD GROVE TR	RAVEN CT	SW		588-G1	21	18	4		300-2
CPS & ARS	1118	142	COUNTY		COTTONWOOD GROVE TR	LOST HILLS RD	NW		588-G1	14	18	6		300-2
CPS & ARS	1118	143	COUNTY		RAVEN CT	COTTONWOOD GROVE TR	SW	3815	588-G1	3.5	18	6		300-2
CPS & ARS	1118	144	COUNTY		LOST SPRINGS DR	COTTONWOOD GROVE TR	NW	3843	588-G1	3.5	18	4		300-2
CPS & ARS	1118	145	COUNTY		LOST SPRINGS DR	COTTONWOOD GROVE TR	NW2	3843	588-G1	14	18	4		300-2
CPS & ARS	1118	146	COUNTY		LOST SPRINGS DR	COTTONWOOD GROVE TR	NE	3840	588-G1	14	18	2		300-2
CPS & ARS	1118	147	COUNTY		LOST SPRINGS DR	COTTONWOOD GROVE TR	SE	3832	588-G1	10	18	4		300-2
CPS & ARS	1118	148	COUNTY		LOST HILLS RD	CALABASAS HILLS RD	NW	870' NW/O CORNER	588-G1	7	24	2		300-2
CPS & ARS	1118	149	COUNTY		LOST HILLS RD	MEADOW CREEK LN	NE2	670' NE/O CORNER	588-G1	7	18	6		300-2
CPS & ARS	1118	150	COUNTY		LOST SPRINGS DR	COTTONWOOD GROVE TR	NW	ACROSS 4024	558-G7	14	18	4		300-2
CPS & ARS	1118	151	COUNTY		COTTONWOOD GROVE TR	LOST SPRINGS DR	NW	4051	588-G7	14	18	4		300-2
CPS & ARS	1118	152	COUNTY		COTTONWOOD GROVE TR	LOST SPRINGS DR	SW	4050	588-G7	7	18	4		300-2
CPS & ARS	1118	153	COUNTY		COTTONWOOD GROVE TR	LOST SPRINGS DR	SW2	4044	588-G7	14	18	2		300-2
CPS & ARS	1118	154	COUNTY		LOST SPRINGS DR	COLD SPRINGS ST	SW	ACROSS 4040	588-G7	7	18	4		300-2
CPS & ARS	1118	155	COUNTY		LOST SPRINGS DR	COLD SPRINGS ST	SE	4040	588-G7	7	18	4		300-2
CPS & ARS	1118	156	COUNTY		COLD SPRINGS ST	LOST SPRINGS DR	SW	26802	588-G7	7	18	4		300-2
CPS & ARS	1118	157	COUNTY		COLD SPRINGS ST	LOST SPRINGS DR	NW	26803	588-G7	7	18	4		300-2
CPS & ARS	1118	158	COUNTY		COLD SPRINGS ST	LOST HILLS RD	NW		588-G7	3.5	18	4		300-2
CPS & ARS	1118	160	COUNTY		MALIBU HILLS RD	LOST HILLS RD	NE2	26775	558-G7	21	24	2		300-2
CPS & ARS	1118	161	COUNTY		MALIBU HILLS RD	LOST HILLS RD	NE	26775	558-G7	21	24	2		300-2
CPS & ARS	1118	162	COUNTY		MALIBU HILLS RD	LOST HILLS RD	SE		558-G7	21	18	6		300-2
CPS & ARS	1118	163	COUNTY		LOST HILLS RD	MALIBU HILLS RD	NE	ACROSS 4301	558-G7	21	18	6		300-2

SAMPLE

CITY OF CALABASAS

DEVICE TO BE INSTALLED	CATCH BASIN ID	NO.	OWNED BY	PRIORITY	STREET	NEAREST CROSS STREET	LOCATION OF CORNER	ADDRESS	T.G.	CATCH BASIN WIDTH (FT)	OUTLET PIPE SIZE (IN)	OUTLET PIPE LOCATION	COMMERCIAL OR INDUSTRY AREA	TYPE OF CATCH BASIN
CPS & ARS	1118	164	COUNTY		LOST HILLS RD	MALIBU HILLS RD	NW	4301	558-G7	28	18	2		300-2
CPS & ARS	1118	166	COUNTY		MALIBU HILLS RD	LOST HILLS RD	NW	26855	588-G7	21	24	4		300-2
CPS & ARS	1118	167	COUNTY		MALIBU HILLS RD	LOST HILLS RD	SW	ACROSS 26855	588-G7	7	18	4		300-2
CPS & ARS	1118	168	COUNTY		MALIBU HILLS RD	CALABASAS HILLS RD	NW		588-G7	14	18	4		300-2
CPS & ARS	1118	169	COUNTY		MALIBU HILLS RD	CALABASAS HILLS RD	SW		558-G7	21	24	4		300-2
CPS & ARS	1118	170	COUNTY		MALIBU HILLS RD	CALABASAS HILLS RD	SW2		558-G7	21	18	2		300-2
CPS & ARS	1118	171	COUNTY		MALIBU HILLS RD	SHADOW HILLS RD	NE	26901	558-G7	28	24	4		300-2
CPS & ARS	1118	172	COUNTY		MALIBU HILLS RD	SHADOW HILLS RD	SW	27040	558-G7	28	20	4		300-2
CPS & ARS	1118	173	COUNTY		CALABASAS HILLS RD	COLD SPRINGS ST	SW		558-G7	10	18	4		300-2
CPS & ARS	1118	174	COUNTY		CALABASAS HILLS RD	COLD SPRINGS ST	SE	400' SE/O CORNER	558-G7	7	18	5		300-2
CPS & ARS	1118	175	COUNTY		CALABASAS HILLS RD	COLD SPRINGS ST	SW2	ACROSS CB 1118174	588-G1	7	18	4		300-2
CPS & ARS	1118	181	COUNTY		COLD SPRINGS ST	ARROYO WILLOW LN	SW	26842	588-G7	7	18	4		300-2
CPS & ARS	1118	182	COUNTY		COLD SPRINGS ST	ARROYO WILLOW LN	NW	ACROSS 26842	588-G7	7	18	4		300-2
CPS & ARS	1118	183	COUNTY		ARROYO WILLOW LN	COLD SPRINGS ST	NW	4103	588-G7	3.5	18	2		300-2
CPS & ARS	1118	184	COUNTY		ARROYO WILLOW LN	COLD SPRINGS ST	NW2	4109	588-G7	14	18	2		300-2
CPS & ARS	1118	185	COUNTY		ARROYO WILLOW LN	COLD SPRINGS ST	NE	4102	588-G7	7	18	6		300-2
CPS & ARS	1118	186	COUNTY		LOST SPRINGS DR	COLD SPRINGS ST	NW	ACROSS 4102	588-G7	14	18	2		300-2
CPS & ARS	1118	187	COUNTY		LOST SPRINGS DR	COLD SPRINGS ST	NE	4102	588-G7	14	18	6		300-2
CPS & ARS	1118	188	COUNTY		LOST SPRINGS DR	COLD SPRINGS ST	NE2	4106	588-G7	7	18	6		300-2
CPS & ARS	1118	189	COUNTY		LOST HILLS RD	COLD SPRINGS ST	NW		558-G7	7	18	2		300-2
CPS & ARS	1118	190	COUNTY		LOST HILLS RD	COLD SPRINGS ST	SE		558-G7	7	18	2		300-2
CPS & ARS	1118	191	COUNTY		LOST HILLS RD	COLD SPRINGS ST	NE		558-G7	7	18	4		300-2
CPS & ARS	1118	192	COUNTY		LOST HILLS RD	COLD SPRINGS ST	NW2	440' NW/O CORNER	558-G7	7	18	4		300-2
CPS & ARS	1118	197	COUNTY		AGOURA RD	MALIBU HILLS RD	NW	26801	558-G6	28	18	6		300-2
CPS & ARS	1118	198	COUNTY		AGOURA RD	MALIBU HILLS RD	NW2	26801	558-G6	14	18	8		300-2
CPS & ARS	1118	199	COUNTY		AGOURA RD	MALIBU HILLS RD	NW3	26850	558-G6	28	22	3		300-2
CPS & ARS	1118	200	COUNTY		AGOURA RD	MALIBU HILLS RD	SW	26850	558-G6	14	18	4		300-2
CPS & ARS	1118	207	COUNTY		AGOURA RD	MALIBU HILLS RD	NW	27001	558-G7	3.5	17	4		300-2
CPS & ARS	1118	208	COUNTY		AGOURA RD	MALIBU HILLS RD	SW	27050	558-G7	21	20	2		300-2
CPS & ARS	1118	209	COUNTY		AGOURA RD	MALIBU HILLS RD	SW2	27050	558-G7	21	18	2		300-2
CPS & ARS	1118	217	COUNTY		SHADOW HILLS RD	MALIBU HILLS RD	SW	ACROSS CB 1118218	558-G7	3.5	18	4		300-2
CPS & ARS	1118	218	COUNTY		SHADOW HILLS RD	MALIBU HILLS RD	SE	4200	558-G7	7	18	4		300-2
CPS & ARS	1118	228	COUNTY		CALABASAS HILLS RD	PEACOCK RIDGE RD	NW		588-G1	7	18	1		301-2
CPS & ARS	1118	233	COUNTY		AGOURA RD	LAS VIRGENES RD	SW	26630	558-H6	28	18	2		300-2
CPS & ARS	1118	238	COUNTY		AGOURA RD	LAS VIRGENES RD	NW	26601	558-H6	21	39	4		300-2
CPS & ARS	1118	239	COUNTY		AGOURA RD	LAS VIRGENES RD	NW2	26601	558-H6	28	36	6		300-2
CPS & ARS	1118	XXX	COUNTY		LAS VIRGENES RD	AE WRIGHT	SE	4029	558-H7	3.5	18	4		301-2
CPS & ARS	1152	087	COUNTY		THOUSAND OAKS BLVD	PARKMOR RD	NE		558-H4	14	18	3		300-2
CPS & ARS	1152	088	COUNTY		PARKMOR RD	THOUSAND OAKS BLVD	NE	ACROSS 5609	558-J4	3.5	24	5		300-2
CPS & ARS	1152	089	COUNTY		PARKMOR RD	THOUSAND OAKS BLVD	NW	5609	558-J4	7	18	2		300-2
CPS & ARS	1152	090	COUNTY		PARKMOR RD	THOUSAND OAKS BLVD	NE2	ACROSS 5609	558-J4	14	18	6		300-2
CPS & ARS	1152	091	COUNTY		THOUSAND OAKS BLVD	PARKMOR RD	NW		558-H4	14	18	4		300-2
CPS & ARS	1152	153	COUNTY		MUREAU RD	LAS VIRGENES RD	NE	26025	558-H5	7	18	4	YES	300-2
CPS & ARS	1152	154	COUNTY		MUREAU RD	LAS VIRGENES RD	SE	26134	558-H5	7	18	4	YES	300-2
CPS & ARS	1152	156	COUNTY		RED BLUFF DR	PARKMOR RD	SE	26078	558-J4	14	24	2		300-2
CPS & ARS	1152	157	COUNTY		RED BLUFF DR	PARKMOR RD	NE		558-J4	14	24	6		300-2

DRAFT

Attachment A

Automatic Retractable Screens (ARS) Requirements

The ARS prevents trash and debris from entering a catch basin during dry weather and moderate storm flows by keeping the trash and debris in the street gutter for collection by street sweepers. ARS are not allowed on CBs connecting to drains of less than 4-year frequency design storm.

The City and its contractor shall adhere to the requirements, conditions, and provisions listed below and on the Permit:

1. The City's contractor will be required to perform a field operational test on all of the catch basins (CBs) in which ARS units were installed, as required in the Public Works' specifications for ARS contracts (Attachment B). Any units that do not open, close, and lock closed automatically under the test conditions, shall be repaired or replaced and retested. This process shall be repeated until the failed unit passes the test.
2. The exposed ends of the protection bar, when removed, must be drilled out to a minimum depth of 1/4-inch and refilled with neat "Sikadur 32, Hi-Mod" or Agency-approved equal. When CB protection bars are removed, each ARS unit shall be fitted with a permanent, fixed horizontal, 3/4-inch diameter solid stainless steel bar located at the same distance above the flow line as the existing protection bar. Butt welding of the protection bar will not be allowed. The new protection bar shall remain fixed when the unit opens and shall not protrude beyond the projected curb face. However, the protection bar replacement will be waived when both of the following conditions are met:
   - Where CB curb face height is 12 inches or less.
   - When the opening, between the ARS unit, in fully open position, and the flow line is such that a sphere of 4 inches in diameter cannot pass through.
3. The City shall, during storm events; patrol the locations where ARS units are installed and clear any trash lodged on the screen to allow storm flows to enter the catch basin.

SAMPLE

Attachment A (cont.)

Connector Pipe Screen (CPS) Requirements

The CPS prevents trash and debris from entering the storm drain system during dry weather and moderate storm flows by keeping the trash and debris inside the catch basin.

The CPS shall be designed to retain all trash larger than 5 mm (0.197 inches) in the catch basin, and shall comply with the following items:

1. The CPS shall be sized, fabricated and installed conforming to the configurations shown in the CPS Sizing Table 1, Appendices A-1, A-2, and A-3.
2. The CPS shall not interfere with the operation of an existing or proposed ARS.
3. The CPS unit shall have a sufficient structural integrity to withstand a lateral force of standing water (62.4 lb/ft^3) within the catch basin area when the screen becomes 100% clogged. The CPS unit shall be bolted to the catch basin walls.
4. The CPS shall be configured with deflector plates or screens preventing trash from falling between the screen and connector pipe. The deflector plate shall be designed to withstand a vertical load of 10 lbs per square foot.
5. The gap at the bottom, sides, and joints of the CPS unit shall not exceed 5mm (0.197 inches).
6. The perimeter of the CPS shall include a structural frame for stiffness, a bolting surface to fasten the CPS to the wall of the catch basin, and support for the upper portion of the CPS unit referred to as the "bypass" (see Appendix A-1).
7. All parts/components of the CPS unit must be sized to fit through the catch basin's manhole opening.
8. When the CPS unit encroaches more than 4 inches into the manhole opening, the Contractor shall install a Removable CPS unit. The Removable CPS unit shall be designed and installed with a removable panel allowing access into the catch basin. The removable panel shall be easily disengaged from the rest of CPS assembly upon entry or from the outside of the catch basin. The Contractor shall submit shop drawings for review and approval of the Agency. It is the responsibility of the Contractor to field verify the location and dimensions of these basins.
9. The CPS frame shall be fabricated from S-304 stainless steel, or an Agency approved equal stainless steel alloy. The Structural members shall have a minimum thickness of 3/16 inches.
10. The CPS screen shall be fabricated from perforated metal of Type S-304 stainless steel, or an Agency approved equal stainless steel alloy. The screen shall have a minimum thickness of fourteen (14) gauge (0.0781 inches) The geometrical opening shape shall have a diameter of 5mm (0.197 inches).

SAMPLE

Attachment A (cont.)

11. The screen material used shall have at least 45% open area.
12. Any edge of the CPS that is not flush with the wall or floor of the catch basin shall be smooth with no prongs or jagged edges.
13. The assembly bolts, screws, nuts, and washers shall be fabricated entirely from S-316 stainless steel. The concrete anchor bolts shall use a Red Head Multi-Set II drop-in anchor, SSRM-38, with Type 316 stainless steel threaded rods, nuts and washers, or Agency approved equal.

Preliminary Measurement. The Contractor shall make detailed measurements of each catch basin, including the size and location of the connector pipe, for the proper fabrication of the devices. The Contractor shall submit written records of its measurements to the District for review and approval prior to fabrication of the CPS units. Improper fabrication of devices due to errors in the measurements shall be corrected at the Contractor's expense.

Cleaning of Existing Catch Basins. The Contractor shall furnish all materials, equipment, tools and labor to cleanout (i.e. remove and dispose of all debris from within and around) all catch basins in which retrofit devices will be installed under this Contract to the maintenance standards specified. Cleanout shall also include the catch basin connector pipe openings and the first 6 feet thereof. The catch basin shall be clean at the time of the installation of the retrofit device. Any trash and debris that accumulates between the dates the catch basin is cleaned and the date the device will be installed shall be removed prior to installation of the device at the Contractor's expense.

SAMPLE

Maintenance Conditions and Maintenance Standards. Following are deficiencies in maintenance conditions and their corresponding maintenance standards which shall apply to this Contract. The cleanout of each catch basin shall meet the maintenance standards listed as follows:

	Description of Maintenance Condition Deficiency	Description of Maintenance Standard
1.	Trash and debris located immediately in front of curb opening or side opening of catch basin, and on top or between metal grates of grated catch basin.	No trash and debris located immediately in front of catch basin opening, and on top or between metal grates.
2.	Vegetation growing across and/or blocking the basin opening.	No vegetation blocking catch basin opening.
3.	Trash and debris in the basin.	No trash and debris within the catch basin.
4.	Trash and debris in the connector pipe opening, upstream or downstream.	No trash and debris in connector pipe opening and/or in the connector pipe for a distance of 6 feet from the opening.

Attachment A (cont.)

Trash and debris shall include, but is not limited to, mud, vegetation, and garbage.

Upon completion of a cleanout operation at a catch basin and before leaving it, the Contractor shall sweep the top surface of the catch basin and the area 2 feet around the basin, and shall remove any trash and debris resulting from the cleanout operations. No debris is to be left at a catch basin for future pick-up.

Method of Removal. All trash and debris required to be removed from the catch basins shall be removed in a manner to be determined by the Contractor. The Contractor shall not allow any trash or debris to enter the connector pipe or main line as a result of the cleanout operations.

Debris Disposal. All trash and debris removed under this Contract shall become the property of the Contractor and shall be legally disposed of away from the basin sites. The Contractor is responsible for proper disposal of the trash and debris, including obtaining approvals from all jurisdictional agencies, as applicable. The contractor shall contact LA County Animal Care and Control for pickup and disposal of dead animals. However, the Contractor shall be responsible for removing any dead animal from inside a catch basin. The Contractor shall also be responsible for contacting and coordinating with Animal Care and Control, a list of local Animal Care and Control offices may be obtained at http://animalcare.lacounty.gov/locationByCity.asp.

Staff Gauge. The contractor shall paint a staff gauge per Appendix A-2. The staff gauge shall be located such that it is visible through the curb opening or grating of the catch basin.

SAMPLE

Attachment B
Field Testing of ARS Units

Onsite Test. Each unit shall be manually operated upon completion of the installation to ensure that the screen and all moving parts move freely and the screen locks securely in the closed position. Units that are determined by Public Works to be malfunctioning shall be repaired or replaced at the sole expense of the Contractor.

All of the catch basins (CBs) in which ARS units were installed will be tested using water supplied from a fire hydrant or water truck. The Contractor shall be responsible for providing the source of water, including written approval from the water agency if a hydrant is used. Sufficient water shall be provided to cause the ARS units to open with no other assistance as follows:

Flowing Water Test

1. Sandbags shall be placed around the CBs opening to allow the water to pond in front of the CB to a depth of 3 inches-, measured from the flow line of the CB opening local depression. The sandbags shall be located 5 feet upstream and downstream of the end of the local depression. Sandbags shall also be placed 7 feet from and parallel to the curb face.
2. An impermeable rigid membrane/barrier shall be placed covering the CB opening to allow the water to pond in front of the CB. The membrane/barrier shall be capable of sealing the CB opening without leakage so that the water ponds to the depth required.
3. Once the water reaches the depth described herein, the impermeable membrane shall be removed in one quick and continuous motion to allow the ponded water to instantaneously enter the CB and cause the ARS to open. A continuous flow of water shall be provided for at least two minutes after the initial opening of the ARS units in sufficient quantity to maintain the units open. At the end of the two minutes, the flow of the water shall be stopped and the unit shall fully close automatically prior to or immediately after the flow into the CB stops.
4. This process shall be successfully completed at least two consecutive times without adjustments and/or calibration between trials.
5. Any units that do not open, close, and lock closed automatically under the test conditions, described herein, shall be repaired or replaced at the sole expense of the Contractor and retested. This process shall be repeated until the failed unit passes the test at the sole expense of the Contractor.

SAMPLE

ATTACHMENT C

1. A minimum of five (5) working days Notice to District designated representative prior to Preconstruction Meeting. A Preconstruction meeting is required before commencement of the Work authorized under this Permit.
2. The Permittee shall provide Construction Schedule to District's field representative before starting work on this Permit. The schedule shall indicate the Catch Basins that the Permittee will complete each week, identified by the assigned Identification Number listed in the attached "LOS ANGELES COUNTY FLOOD CONTROL DISTRICT CATCH BASINS IDENTIFICATION LIST". Also, Permittee shall submit to the District's representative paper copy of the updated Construction Schedule on the first working day of each month.
3. County will be administering CB Cleanout contracts within the City that may take place concurrent with City's Project. Work on District's Catch Basins, under County Contract, shall have priority and/or testing be completed without interruption.
4. Permittee shall coordinate with District designated representative to schedule inspection for selected Catch Basins. District designated representative will select the Catch Basins to be inspected and/or tested.
5. Permittee shall be responsible for enforcing Section 7-10 PUBLIC CONVENIENCE AND SAFETY of the GREENBOOK, (e.g. Traffic and Access, Safety, Confined Spaces etc.). The inspection provided by the District shall not be construed as a Safety Inspection.
6. Upon Completion of the installations and testing, Permittee shall produce Inspection Records for each Catch Basin.
7. Any damage resulting from the Permittee's operations shall be restored and/or repaired at Permittee's expense and to the satisfaction of the District's field representative.
8. When removing and reinstalling the catch basin manhole covers, the Permittee shall grease all catch basin cover screws with a high temperature thread lubricant and seal grease (Jet-Cube by Koper-Kote or equal). Screws or bolts that are missing or cannot be reused shall be replaced with new ones meeting the requirements specified in applicable Standard Plans as directed by the District's field representative. If the catch basin cover screws are frozen (e.g. rusted in place) the Contractor shall remove the frozen cover screws. If during their removal the manhole covers or screws should become damaged, it shall be the Contractor's responsibility to replace them in accordance with the applicable standard plan and to re-drill and tap new holes, if necessary.
9. Permittee shall be responsible for collecting the retaining trash and debris within the street by street sweeping and other equipment.

SAMPLE

ATTACHMENT C (cont.)

10. Permittee shall furnish eight (8) copies of a Technical Manual for ARS and CPS Units and eight (8) electronic copies on CD-Rom in Portable Document Format (PDF). The Technical Manual shall be submitted prior to field acceptance of the permitted work. Each manual shall, at minimum, include the following:

    a. Title Sheet.

    b. Table of Contents.

    c. Manufacturer, supplier, spare parts, and servicing location information including name, address, phone number of the manufacturer and local representative.

    d. Recommended installation, adjustment, calibration and troubleshooting procedures.

    e. Lubrication recommended if applicable.

    f. Recommended preventive maintenance and maintenance procedure.

    g. Complete parts list, by generic title and identification number, with isometric views and schematics of each assembly.

    h. Recommended spare parts list and list of special tools and equipment required for O&M.

    i. Disassembly, overhaul, reassembly, and realignment instructions.

    j. A discussion of the warranty and how to obtain warranty service.

11. Manufacturer's Warranty, all ARS and CPS units shall be covered by a three (3)-year manufacturer's warranty starting on the date of acceptance of the work authorized under this Permit by the District. The warranty shall cover the units against corrosion, excessive wearing of moving parts, and operational malfunction. The manufacturer shall provide, at no cost to the District, all labor, material and equipment required to repair or replace the units during the warranty period, including but not limited to calibration and adjustment of moving parts to ensure the unit operates properly.

12. Detailed shop drawings for the ARS and CPS units shall be submitted to the District. No ARS or CPS fabrication shall start until the shop drawings are approved by the District. The Shop Drawings must clearly describe the details and mechanical operation of the ARS and CPS Units, and, at a minimum, must contain:

SAMPLE

ATTACHMENT C (cont.)

a. Drawings descriptions and details of the units.
b. Materials used.
c. Connection details.
d. Assembly details.
e. Mounting details.
f. Dimensions of all parts.
g. Any other information needed to manufacture, install, and use the units.
h. Correct title of the City Project.
i. Names of the City and Permit Number(s).

13. Upon completion of the contract, the City must submit an as-built spreadsheet, for each permit, containing the following data:

    a. County approved ARS manufacturer name and contact information.
    b. ARS name and model.
    c. For each catch basin:

        i. City CB No.
        ii. County CB No.
        iii. County Drain Name.
        iv. Street Name.
        v. Nearest cross street
        vi. Thomas Guide page and coordinates.
        vii. GPS coordinates.
        viii. CB type (SPPWC Std. Plan No.).
        ix. W dimension.
        x. Number of grates.
        xi. V dimension.
        xii. Curb face height.
        xiii. Number of ARS units installed.
        xiv. Whether or not a CPS was installed.

SAMPLE

ATTACHMENT C (cont.)

14. No ARS or CPS may be installed in any CB in a sump. Any location where CB is found to be in a sump, in a cul-de-sac, or with flow entering the basin from two opposing directions, must be removed from the project.

SAMPLE

TABLE 1
CPS SIZING TABLE FOR CBs IN NON-SUMP CONDITIONS WITH NO ARS

*V-depth (ft)	CB Width (ft)	Bypass Height H_b (in)	Screen Height H_s (in)	Screen Length L (ft)	G (in)
3.0	3.5	8	14	3.0	6
	7			4.0	
	10			5.0	
	14			6.0	
	21			8.0	
	28			9.0	
3.5	3.5	10	16	3.0	8
	7			4.0	
	10			5.0	
	14			6.0	
	21			8.0	
	28			9.0	
4.0	3.5	12	20	3.0	8
	7			4.0	
	10			5.0	
	14			6.0	
	21			7.0	
	28			8.0	
4.5 or greater	3.5	12	22	3.0	10 or greater
	7			4.0	
	10			5.0	
	14			6.0	
	21			7.0	
	28			8.0	

SAMPLE

* for CBs with v-depth less than 3 feet, contact the District for H_b, H_s, L, and G values.

TABLE 2
CPS SIZING TABLE FOR CBs WITH ARS
CITY OF CALABASAS

DEVICE TO BE INSTALLED	CATCH BASIN ID	NO.	OWNED BY	STREET	NEAREST CROSS STREET	LOCATION OF CORNER	ADDRESS	CATCH BASIN WIDTH (FT)	BYPASS HEIGHT HB (IN)	SCREEN HEIGHT HS (IN)	SCREEN LENGTH L (FT)	G (IN)	OUTLET PIPE SIZE (IN)
CPS & ARS	1117	001	COUNTY	LAS VIRGENES RD	MONT CALABASAS DR	NE	6002, BLD#62	14	18	21	6	18	18
CPS & ARS	1117	002	COUNTY	LAS VIRGENES RD	MONT CALABASAS DR	NE	5940, BLD#50	21	18	24	8	18	18
CPS & ARS	1117	010	COUNTY	LAS VIRGENES RD	MONT CALABASAS DR	NE	5736	21	12	21	8	7	18
CPS & ARS	1117	XXX	COUNTY	LAS VIRGENES RD	THOUSAND OAKS BLVD	CNE	ACROSS CB 1117010	2	12	24	3	15	18
CPS & ARS	1117	012	COUNTY	ADAMOR RD	PARKMOR RD	NW	26273	7	14	24	4	16	24
CPS & ARS	1117	013	COUNTY	ADAMOR RD	PARKMOR RD	NW2	26273	7	12	24	4	14	24
CPS & ARS	1117	014	COUNTY	ADAMOR RD	PARKMOR RD	NW3	26273	11.5	12	18	6	13	18
CPS & ARS	1117	015	COUNTY	ADAMOR RD	PARKMOR RD	NE	ACROSS CB 1117012	7	14	24	4	19	24
CPS & ARS	1117	016	COUNTY	ADAMOR RD	PARKMOR RD	NE2	ACROSS CB 1117013	7	12	24	4	12	24
CPS & ARS	1117	017	COUNTY	ADAMOR RD	PARKMOR RD	NE3	ACROSS CB 1117014	15	12	24	6	8	24
CPS & ARS	1117	018	COUNTY	ALIZIA CANYON DR	PARKMOR RD	SE		14	13	18	6	8	18
CPS & ARS	1117	019	COUNTY	ALIZIA CANYON DR	PARKMOR RD	NE	ACROSS 26272	7	10	18	4	14	18
CPS & ARS	1117	020	COUNTY	ALIZIA CANYON DR	RUTHWOOD DR	SE		7	12	18	4	9	18
CPS & ARS	1117	021	COUNTY	ALIZIA CANYON DR	RUTHWOOD DR	NE		7	12	18	4	9	18
CPS & ARS	1117	022	COUNTY	RUTHWOOD DR	ALIZIA CANYON DR	NE		12	12	24	6	8	18
CPS & ARS	1117	023	COUNTY	RUTHWOOD DR	ALIZIA CANYON DR	NW		12	18	22	5	10	24
CPS & ARS	1117	024	COUNTY	ALIZIA CANYON DR	PARKMOR RD	SE2	26214	14	12	24	6	8	18
CPS & ARS	1117	025	COUNTY	ALIZIA CANYON DR	PARKMOR RD	NE2	ACROSS 26214	14	12	22	6	7	18
CPS & ARS	1117	028	COUNTY	RUTHWOOD DR	THOUSAND OAKS BLVD	NW		7	12	24	4	12	18
CPS & ARS	1117	029	COUNTY	RUTHWOOD DR	THOUSAND OAKS BLVD	NE2		7	10	18	4	12	18
CPS & ARS	1117	030	COUNTY	RUTHWOOD DR	THOUSAND OAKS BLVD	NE		3.5	12	20	3	7	18
CPS & ARS	1117	031	COUNTY	THOUSAND OAKS BLVD	RUTHWOOD DR	SE		12	14	24	5	9	18
CPS & ARS	1117	032	COUNTY	RUTHWOOD DR	HATMOR DR	NE		14	12	22	6	8	24
CPS & ARS	1117	035	COUNTY	THOUSAND OAKS BLVD	LAS VIRGENES RD	NE		3.5	12	20	3	6	18
CPS & ARS	1117	036	COUNTY	LAS VIRGENES RD	THOUSAND OAKS BLVD	NE		21	14	21	8	8	18
CPS & ARS	1117	XXX	COUNTY	LAS VIRGENES RD	THOUSAND OAKS BLVD	CNE	ACROSS CB 1117036	7	12	18	4	8	18
CPS & ARS	1117	XXX	COUNTY	LAS VIRGENES RD	THOUSAND OAKS BLVD	CNW	ACROSS CB 1117036	7	12	18	4	8	18
CPS & ARS	1117	XXX	COUNTY	LAS VIRGENES RD	THOUSAND OAKS BLVD	NW	ACROSS CB 1117036	3.5	14	24	3	18	18
CPS & ARS	1117	037	COUNTY	THOUSAND OAKS BLVD	LAS VIRGENES RD	SE		21	18	24	8	11	24
CPS & ARS	1117	038	COUNTY	THOUSAND OAKS BLVD	RUTHWOOD DR	SW	AT PD 1522 GATE	7	10	18	4	8	18
CPS & ARS	1117	043	COUNTY	RUTHWOOD DR	HATMOR DR	SW	5603	14	18	21	5	13	30
CPS & ARS	1117	045	COUNTY	RUTHWOOD DR	ROYMOR DR	NE	5524	7	12	18	4	9	18
CPS & ARS	1117	046	COUNTY	ROYMOR DR	RUTHWOOD DR	NE		7	10	18	4	17	18
CPS & ARS	1117	047	COUNTY	RUTHWOOD DR	ROYMOR DR	SE	5510	7	12	24	4	12	24
CPS & ARS	1117	048	COUNTY	RUTHWOOD DR	ROYMOR DR	SW	5509	7	12	24	4	27	24
CPS & ARS	1117	050	COUNTY	LAS VIRGENES RD	SADDLERIDGE LN	SE		14	18	24	6	37	24
CPS & ARS	1117	054	COUNTY	PARKMOR RD	LAS VIRGENES RD	SE	5304	14	12	22	6	7	26
CPS & ARS	1117	055	COUNTY	PARKMOR RD	LAS VIRGENES RD	NE	ACROSS 5304	14	12	22	6	8	26
CPS & ARS	1117	058	COUNTY	LAS VIRGENES RD	MUREAU RD	SW	5215	7	12	19	4	9.5	18
CPS & ARS	1118	001	COUNTY	DE BERRY DR	EDGEWARE DR	SE	26900	14	18	24	6	35	24
CPS & ARS	1118	002	COUNTY	EDGEWARE DR	DE BERRY DR	NW	5207	10	12	24	5	24	18
CPS & ARS	1118	003	COUNTY	HELMOND DR	PARKVILLE RD	NW	26909	3.5	12	18	3	6	18
CPS & ARS	1118	004	COUNTY	PARKVILLE RD	CANWOOD ST	NW		7	14	24	4	85	48
CPS & ARS	1118	016	COUNTY	WILLOW GLEN ST	OAK GLEN ST	NW	4392	3.5	14	24	3	18	18
CPS & ARS	1118	017	COUNTY	WILLOW GLEN ST	OAK GLEN ST	NE	4391	3.5	12	24	3	12	16
CPS & ARS	1118	018	COUNTY	OAK GLEN ST	WILLOW GLEN ST	NE	4318	3.5	12	21	3	10	18
CPS & ARS	1118	019	COUNTY	OAK GLEN ST	WILLOW GLEN ST	NW	ACROSS 4318	3.5	10	16	3	8	18

SAMPLE

TABLE 2
CPS SIZING TABLE FOR CBs WITH ARS
CITY OF CALABASAS

DEVICE TO BE INSTALLED	CATCH BASIN ID	NO.	OWNED BY	STREET	NEAREST CROSS STREET	LOCATION OF CORNER	ADDRESS	CATCH BASIN WIDTH (FT)	BYPASS HEIGHT HB (IN)	SCREEN HEIGHT HS (IN)	SCREEN LENGTH L (FT)	G (IN)	OUTLET PIPE SIZE (IN)
CPS & ARS	1118	020	COUNTY	WILLOW GLEN ST	OAK GLEN ST	NW	4328	7	14	24	4	16	18
CPS & ARS	1118	021	COUNTY	WILLOW GLEN ST	OAK GLEN ST	SW	4329	7	14	24	4	15	18
CPS & ARS	1118	030	COUNTY	DE BERRY DR	AMBRIDGE DR	NE		15	18	21	6	17	18
CPS & ARS	1118	031	COUNTY	DE BERRY DR	AMBRIDGE DR	SE	26960	7	14	24	4	122	20
CPS & ARS	1118	034	COUNTY	DE BERRY DR	AMBRIDGE DR	SW	27000	21	18	24	8	114	36
CPS & ARS	1118	035	COUNTY	DE BERRY DR	AMBRIDGE DR	NW	27001	21	18	24	8	21	24
CPS & ARS	1118	036	COUNTY	HELMOND DR	AMBRIDGE DR	NW	27019	7	14	24	3	17	18
CPS & ARS	1118	037	COUNTY	HELMOND DR	AMBRIDGE DR	SW	27014	14	18	24	6	41	18
CPS & ARS	1118	038	COUNTY	GARRET DR	AMBRIDGE DR	NE	26945	7	14	24	4	16	18
CPS & ARS	1118	039	COUNTY	GARRET DR	AMBRIDGE DR	SE	26952	7	14	24	4	28	24
CPS & ARS	1118	040	COUNTY	AMBRIDGE DR	GARRET DR	NE	ACROSS 5037	7	14	24	4	16	18
CPS & ARS	1118	041	COUNTY	CANWOOD ST	AMBRIDGE DR	NE		7	10	18	4	16	18
CPS & ARS	1118	043	COUNTY	AMBRIDGE DR	CANWOOD ST	NW	5001	14	12	24	6	8	18
CPS & ARS	1118	044	COUNTY	CANWOOD ST	AMBRIDGE DR	NW		14	18	21	6	17	24
CPS & ARS	1118	045	COUNTY	DANTES VIEW DR	HELMOND DR	SE	5002	7	14	24	3	17	18
CPS & ARS	1118	112	COUNTY	POPPYSEED PL	MEADOW CREEK LN	NW2	3909	14	18	24	6	27	18
CPS & ARS	1118	113	COUNTY	POPPYSEED PL	MEADOW CREEK LN	NW	3903	7	14	24	4	29	18
CPS & ARS	1118	114	COUNTY	POPPYSEED PL	MEADOW CREEK LN	NE2		14	18	21	6	15	18
CPS & ARS	1118	115	COUNTY	POPPYSEED PL	MEADOW CREEK LN	NE		3.5	14	24	3	19	18
CPS & ARS	1118	116	COUNTY	CEANOTHUS PL	MEADOW CREEK LN	NE		7	18	24	4	16	18
CPS & ARS	1118	117	COUNTY	CEANOTHUS PL	MEADOW CREEK LN	NW		7	10	18	4	18	18
CPS & ARS	1118	119	COUNTY	POPPYSEED PL	MEADOW CREEK LN	SE		7	12	18	4	9	18
CPS & ARS	1118	121	COUNTY	OLEANDER CT	MEADOW CREEK LN	NE		7	14	24	4	47	18
CPS & ARS	1118	122	COUNTY	OLEANDER CT	MEADOW CREEK LN	NW		3.5	12	24	3	51	18
CPS & ARS	1118	123	COUNTY	LUPINE LN	MEADOW CREEK LN	SE		7	14	24	4	15	18
CPS & ARS	1118	124	COUNTY	LUPINE LN	MEADOW CREEK LN	SW		7	14	24	4	27	18
CPS & ARS	1118	125	COUNTY	ORCHID LN	MEADOW CREEK LN	SE		7	10	18	4	18	18
CPS & ARS	1118	126	COUNTY	LOST HILLS RD	EL ENCANTO DR	CNE	ACROSS 3701	7	18	24	4	16	18
CPS & ARS	1118	127	COUNTY	LOST HILLS RD	EL ENCANTO DR	NE	3701	7	14	24	4	37	24
CPS & ARS	1118	128	COUNTY	LOST HILLS RD	EL ENCANTO DR	NW	ACROSS 3701	7	14	24	4	18	18
CPS & ARS	1118	129	COUNTY	CALABASAS HILLS RD	LOST HILLS RD	SW		3.5	14	24	3	20	18
CPS & ARS	1118	130	COUNTY	CALABASAS HILLS RD	LOST HILLS RD	NW		7	12	24	4	28	29
CPS & ARS	1118	132	COUNTY	CALABASAS HILLS RD	LOST SPRINGS DR	NW	3805	7	12	24	4	26	2
CPS & ARS	1118	133	COUNTY	CALABASAS HILLS RD	LOST SPRINGS DR	NE	3806	10	18	22	5	12	18
CPS & ARS	1118	134	COUNTY	LOST HILLS RD	MEADOW CREEK LN	NW		7	12	24	4	24	18
CPS & ARS	1118	135	COUNTY	LOST HILLS RD	MEADOW CREEK LN	CNW		3.5	12	24	3	25	18
CPS & ARS	1118	136	COUNTY	LOST HILLS RD	MEADOW CREEK LN	NE		14	18	24	6	40	18
CPS & ARS	1118	137	COUNTY	MEADOW CREEK LN	LOST HILLS RD	NE		7	14	24	4	48	18
CPS & ARS	1118	138	COUNTY	MEADOW CREEK LN	ORCHID LN	NW		3.5	12	24	3	28	18
CPS & ARS	1118	139	COUNTY	MEADOW CREEK LN	LOST HILLS RD	SE		7	14	24	4	76	18
CPS & ARS	1118	140	COUNTY	MEADOW CREEK LN	ORCHID LN	SW		7	14	24	4	29	18
CPS & ARS	1118	141	COUNTY	COTTONWOOD GROVE TR	RAVEN CT	SW		21	18	24	8	16	18
CPS & ARS	1118	142	COUNTY	COTTONWOOD GROVE TR	LOST HILLS RD	NW		14	18	21	6	14	18
CPS & ARS	1118	143	COUNTY	RAVEN CT	COTTONWOOD GROVE TR	SW	3815	3.5	12	24	3	12	18
CPS & ARS	1118	144	COUNTY	LOST SPRINGS DR	COTTONWOOD GROVE TR	NW	3843	3.5	14	24	3	16	18
CPS & ARS	1118	145	COUNTY	LOST SPRINGS DR	COTTONWOOD GROVE TR	NW2	3843	14	14	24	6	9	18
CPS & ARS	1118	146	COUNTY	LOST SPRINGS DR	COTTONWOOD GROVE TR	NE	3840	14	18	21	6	13	18

SAMPLE

TABLE 2
CPS SIZING TABLE FOR CBs WITH ARS
CITY OF CALABASAS

DEVICE TO BE INSTALLED	CATCH BASIN ID	NO.	OWNED BY	STREET	NEAREST CROSS STREET	LOCATION OF CORNER	ADDRESS	CATCH BASIN WIDTH (FT)	BYPASS HEIGHT HB (IN)	SCREEN HEIGHT HS (IN)	SCREEN LENGTH L (FT)	G (IN)	OUTLET PIPE SIZE (IN)
CPS & ARS	1118	147	COUNTY	LOST SPRINGS DR	COTTONWOOD GROVE TR	SE	3832	10	18	22	5	12	18
CPS & ARS	1118	148	COUNTY	LOST HILLS RD	CALABASAS HILLS RD	NW	870' NW/O CORNER	7	18	24	4	17	24
CPS & ARS	1118	149	COUNTY	LOST HILLS RD	MEADOW CREEK LN	NE2	670' NE/O CORNER	7	18	24	4	17	18
CPS & ARS	1118	150	COUNTY	LOST SPRINGS DR	COTTONWOOD GROVE TR	NW	ACROSS 4024	14	14	24	6	8	18
CPS & ARS	1118	151	COUNTY	COTTONWOOD GROVE TR	LOST SPRINGS DR	NW	4051	14	18	24	6	24	18
CPS & ARS	1118	152	COUNTY	COTTONWOOD GROVE TR	LOST SPRINGS DR	SW	4050	7	18	24	4	16	18
CPS & ARS	1118	153	COUNTY	COTTONWOOD GROVE TR	LOST SPRINGS DR	SW2	4044	14	18	21	6	12	18
CPS & ARS	1118	154	COUNTY	LOST SPRINGS DR	COLD SPRINGS ST	SW	ACROSS 4040	7	14	24	4	18	18
CPS & ARS	1118	155	COUNTY	LOST SPRINGS DR	COLD SPRINGS ST	SE	4040	7	14	24	4	19	18
CPS & ARS	1118	156	COUNTY	COLD SPRINGS ST	LOST SPRINGS DR	SW	26802	7	12	24	4	25	18
CPS & ARS	1118	157	COUNTY	COLD SPRINGS ST	LOST SPRINGS DR	NW	26803	7	14	24	4	17	18
CPS & ARS	1118	158	COUNTY	COLD SPRINGS ST	LOST HILLS RD	NW		3.5	14	24	3	18	18
CPS & ARS	1118	160	COUNTY	MALIBU HILLS RD	LOST HILLS RD	NE2	26775	21	18	24	8	19	24
CPS & ARS	1118	161	COUNTY	MALIBU HILLS RD	LOST HILLS RD	NE	26775	21	18	24	8	30	24
CPS & ARS	1118	162	COUNTY	MALIBU HILLS RD	LOST HILLS RD	SE		21	18	24	8	6	18
CPS & ARS	1118	163	COUNTY	LOST HILLS RD	MALIBU HILLS RD	NE	ACROSS 4301	21	18	24	8	14	18
CPS & ARS	1118	164	COUNTY	LOST HILLS RD	MALIBU HILLS RD	NW	4301	28	18	24	8	28	18
CPS & ARS	1118	166	COUNTY	MALIBU HILLS RD	LOST HILLS RD	NW	26855	21	18	24	8	32.5	24
CPS & ARS	1118	167	COUNTY	MALIBU HILLS RD	LOST HILLS RD	SW	ACROSS 26855	7	10	16	4	8	18
CPS & ARS	1118	168	COUNTY	MALIBU HILLS RD	CALABASAS HILLS RD	NW		14	12	18	6	9	18
CPS & ARS	1118	169	COUNTY	MALIBU HILLS RD	CALABASAS HILLS RD	SW		21	18	24	8	37	24
CPS & ARS	1118	170	COUNTY	MALIBU HILLS RD	CALABASAS HILLS RD	SW2		21	18	24	8	17	18
CPS & ARS	1118	171	COUNTY	MALIBU HILLS RD	SHADOW HILLS RD	NE	26901	28	18	24	8	10	24
CPS & ARS	1118	172	COUNTY	MALIBU HILLS RD	SHADOW HILLS RD	SW	27040	28	18	24	8	22	20
CPS & ARS	1118	173	COUNTY	CALABASAS HILLS RD	COLD SPRINGS ST	SW		10	18	24	5	21	18
CPS & ARS	1118	174	COUNTY	CALABASAS HILLS RD	COLD SPRINGS ST	SE	400' SE/O CORNER	7	10	18	4	18	18
CPS & ARS	1118	175	COUNTY	CALABASAS HILLS RD	COLD SPRINGS ST	SW2	ACROSS CB 1118174	7	12	24	4	10.5	18
CPS & ARS	1118	181	COUNTY	COLD SPRINGS ST	ARROYO WILLOW LN	SW	26842	7	14	24	4	16	18
CPS & ARS	1118	182	COUNTY	COLD SPRINGS ST	ARROYO WILLOW LN	NW	ACROSS 26842	7	14	24	4	16	18
CPS & ARS	1118	183	COUNTY	ARROYO WILLOW LN	COLD SPRINGS ST	NW	4103	3.5	12	24	3	26	18
CPS & ARS	1118	184	COUNTY	ARROYO WILLOW LN	COLD SPRINGS ST	NW2	4109	14	18	21	6	17	18
CPS & ARS	1118	185	COUNTY	ARROYO WILLOW LN	COLD SPRINGS ST	NE	4102	7	18	24	4	17	18
CPS & ARS	1118	186	COUNTY	LOST SPRINGS DR	COLD SPRINGS ST	NW	ACROSS 4102	14	18	21	6	16	18
CPS & ARS	1118	187	COUNTY	LOST SPRINGS DR	COLD SPRINGS ST	NE	4102	14	12	22	6	8	18
CPS & ARS	1118	188	COUNTY	LOST SPRINGS DR	COLD SPRINGS ST	NE2	4106	7	10	18	5	17	18
CPS & ARS	1118	189	COUNTY	LOST HILLS RD	COLD SPRINGS ST	NW		7	18	24	4	16	18
CPS & ARS	1118	190	COUNTY	LOST HILLS RD	COLD SPRINGS ST	SE		7	18	24	4	16	18
CPS & ARS	1118	191	COUNTY	LOST HILLS RD	COLD SPRINGS ST	NE		7	14	24	4	27	18
CPS & ARS	1118	192	COUNTY	LOST HILLS RD	COLD SPRINGS ST	NW2	440' NW/O CORNER	7	12	24	4	27	18
CPS & ARS	1118	197	COUNTY	AGOURA RD	MALIBU HILLS RD	NW	26801	28	18	24	8	30	18
CPS & ARS	1118	198	COUNTY	AGOURA RD	MALIBU HILLS RD	NW2	26801	14	12	18	6	8	18
CPS & ARS	1118	199	COUNTY	AGOURA RD	MALIBU HILLS RD	NW3	26850	28	14	18	8	7	22
CPS & ARS	1118	200	COUNTY	AGOURA RD	MALIBU HILLS RD	SW	26850	14	12	18	6	13	18
CPS & ARS	1118	207	COUNTY	AGOURA RD	MALIBU HILLS RD	NW	27001	3.5	12	21	3	11	17
CPS & ARS	1118	208	COUNTY	AGOURA RD	MALIBU HILLS RD	SW	27050	21	18	24	8	31	20
CPS & ARS	1118	209	COUNTY	AGOURA RD	MALIBU HILLS RD	SW2	27050	21	18	24	8	14	18
CPS & ARS	1118	217	COUNTY	SHADOW HILLS RD	MALIBU HILLS RD	SW	ACROSS CB 1118218	3.5	12	24	3	36	18

SAMPLE

TABLE 2
CPS SIZING TABLE FOR CBs WITH ARS
CITY OF CALABASAS

DEVICE TO BE INSTALLED	CATCH BASIN ID	NO.	OWNED BY	STREET	NEAREST CROSS STREET	LOCATION OF CORNER	ADDRESS	CATCH BASIN WIDTH (FT)	BYPASS HEIGHT HB (IN)	SCREEN HEIGHT HS (IN)	SCREEN LENGTH L (FT)	G (IN)	OUTLET PIPE SIZE (IN)
CPS & ARS	1118	218	COUNTY	SHADOW HILLS RD	MALIBU HILLS RD	SE	4200	7	12	24	4	25	18
CPS & ARS	1118	228	COUNTY	CALABASAS HILLS RD	PEACOCK RIDGE RD	NW		7	12	24	4	16	18
CPS & ARS	1118	233	COUNTY	AGOURA RD	LAS VIRGENES RD	SW	26630	28	15	19	9	8	18
CPS & ARS	1118	238	COUNTY	AGOURA RD	LAS VIRGENES RD	NW	26601	21	18	24	8	41	39
CPS & ARS	1118	239	COUNTY	AGOURA RD	LAS VIRGENES RD	NW2	26601	28	18	24	8	16	36
CPS & ARS	1118	XXX	COUNTY	LAS VIRGENES RD	AE WRIGHT	SE	4029	3.5	12	21	3	7.5	18
CPS & ARS	1152	087	COUNTY	THOUSAND OAKS BLVD	PARKMOR RD	NE		14	10	14	7	8	18
CPS & ARS	1152	088	COUNTY	PARKMOR RD	THOUSAND OAKS BLVD	NE	ACROSS 5609	3.5	12	21	3	10	24
CPS & ARS	1152	089	COUNTY	PARKMOR RD	THOUSAND OAKS BLVD	NW	5609	7	12	18	4	8	18
CPS & ARS	1152	090	COUNTY	PARKMOR RD	THOUSAND OAKS BLVD	NE2	ACROSS 5609	14	12	22	6	6	18
CPS & ARS	1152	091	COUNTY	THOUSAND OAKS BLVD	PARKMOR RD	NW		14	12	22	6	7	18
CPS & ARS	1152	153	COUNTY	MUREAU RD	LAS VIRGENES RD	NE	26025	7	12	18	4	9	18
CPS & ARS	1152	154	COUNTY	MUREAU RD	LAS VIRGENES RD	SE	26134	7	14	24	4	40	18
CPS & ARS	1152	156	COUNTY	RED BLUFF DR	PARKMOR RD	SE	26078	14	17	24	6	22	24
CPS & ARS	1152	157	COUNTY	RED BLUFF DR	PARKMOR RD	NE		14	17	18	6	10	24

SAMPLE

APPENDIX A-1: CPS CONFIGURATION

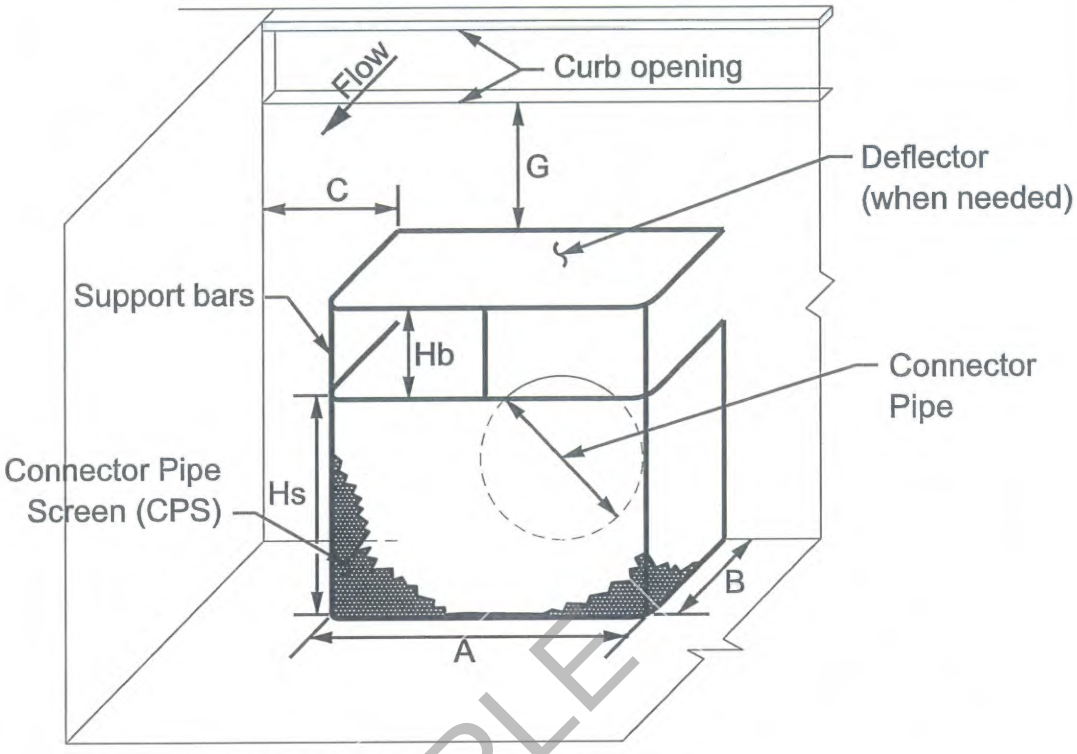

CATCH BASIN INTERIOR VIEW
(Not to scale)

SAMPLE

CPS Length	L = A + 2B
CPS Height	Hs
Bypass Height	Hb
Minimum Wall Clearance	C = 4 inches
Minimum Interior Spacing	B = 10 inches
Minimum Distance from Street Flow Line	G

NOTES

1. The CPS shown above is for illustrative purposes only. The catch basin connector pipe location and the shape and design of the CPS may deviate from the above example.
2. For L, Hs, Hb, and G values see attached CPS sizing Table 1.

APPENDIX A-2: STAFF GAUGE

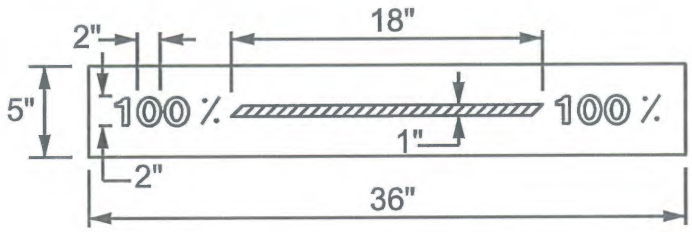

100% STRIPE
(Red Stripe and Numbers on White Background)

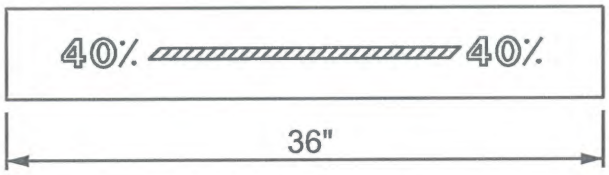

40% STRIPE
(Red Stripe and Numbers on White Background)

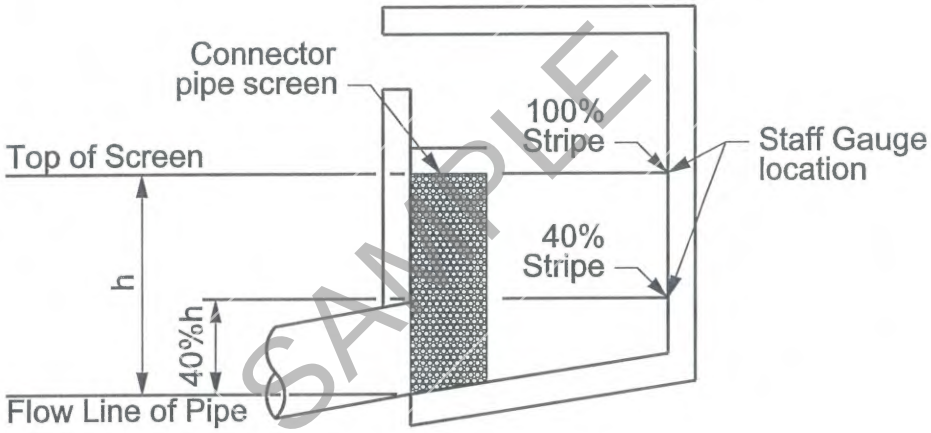

SAMPLE

EXAMPLE LAYOUT

"THE PAINT TYPE AND SPECIFICATIONS MUST BE SUBMITTED TO THE DISTRICT FOR REVIEW AND APPROVAL PRIOR TO USE."

1. The Contractor shall paint a staff gauge as shown on an externally visible interior wall of each catch basin.
2. The Contractor shall paint red stripes and numbers on white background labeling 40% and 100% screen height as shown above.
3. Surfaces must be clean, dry and free from all contaminants including rust that may impair adhesion.

Revised 07/21/2010

APPENDIX A-3: EXAMPLE CPS LAYOUTS

CURB OPENING CATCH BASINS (TYPES 300, 306)

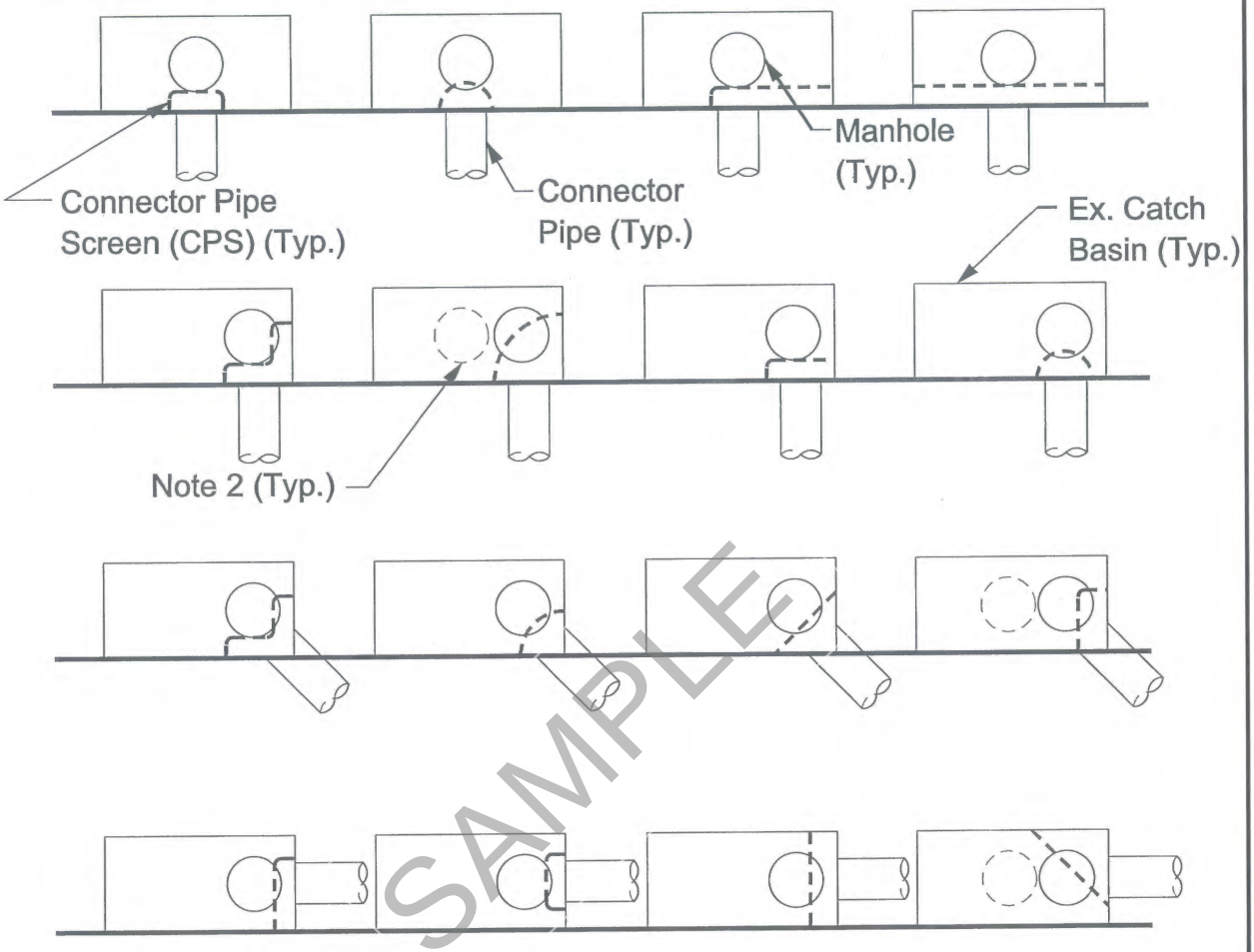

SAMPLE

CURB OPENING CATCH BASINS WITH GRATES (TYPES 301, 302)

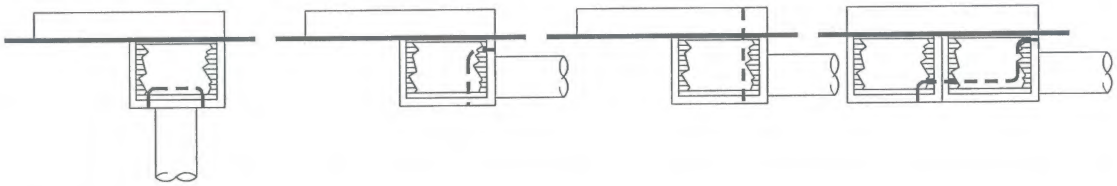

NOTES: 1. The CPS configurations shown above are for illustrative purposes only. This is not a comprehensive list.

2. When the CPS unit enchoaches more than 4 iches into the manhole opening, the Contractor shall install a Removable CPS unit per Attachment A, CPS Requirements, item 8.

APPENDIX A-3: EXAMPLE CPS LAYOUTS (CONT.)

CURB OPENING CATCH BASINS (TYPES 300)

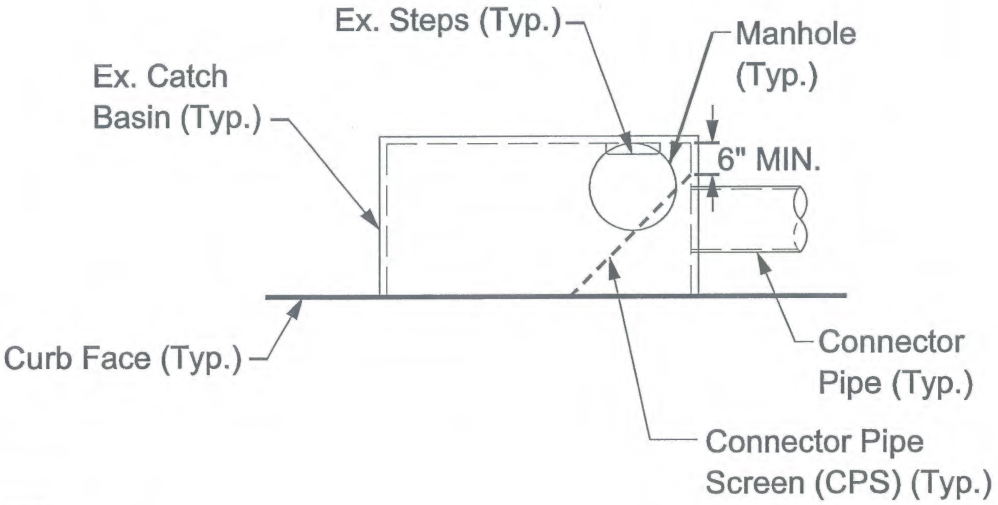

NOTES:

1. The CPS configurations shown above are for illustrative purposes only. This is not a comprehensive list.

2. The CPS unit shall not enchroach more than 4 inches into the manhole opening.

SAMPLE

APPENDIX A-4: CONNECTOR PIPE LOCATION KEY

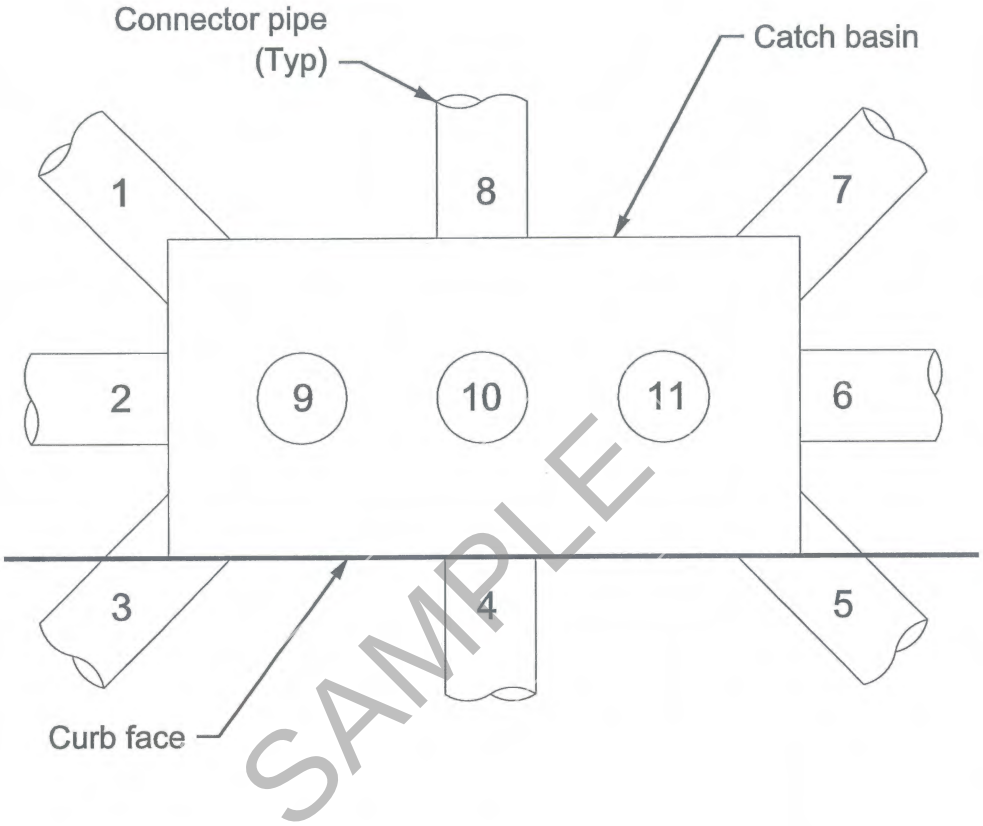

SAMPLE

NOTE

1. This illustration shall be used to identify the location of a catch basin's connector pipe. The number chosen shall be that which most nearly represents the actual location of the connector pipe.

ALL G2 DRAWINGS

EXEMPT FROM
CA. PUBLIC RECORDS ACT
(DO NOT DISTRIBUTE)

CASE # 1.- FRONT WALL WITH DEFLECTOR

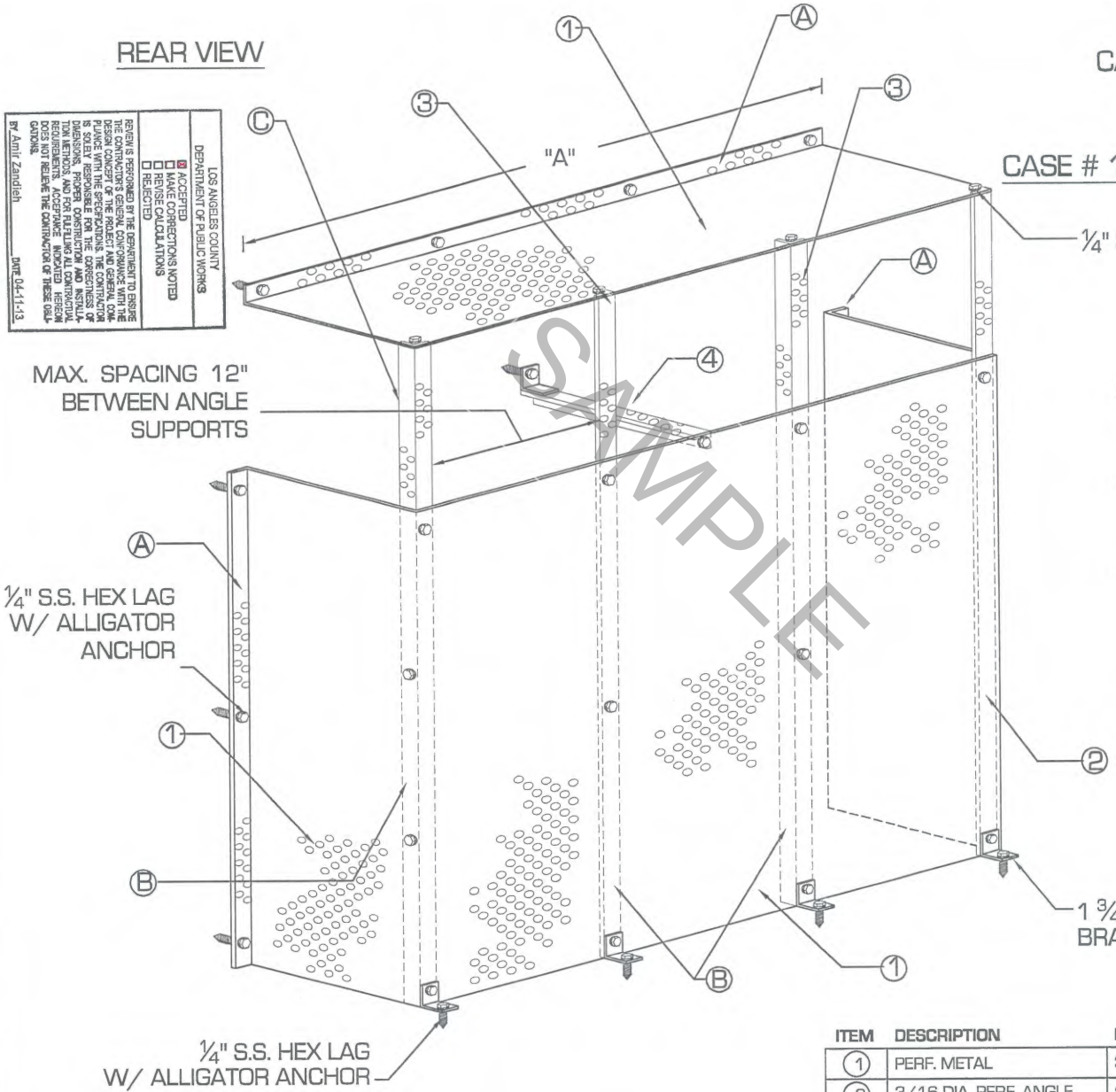

LOS ANGELES COUNTY
DEPARTMENT OF PUBLIC WORKS
☒ ACCEPTED
☐ MAKE CORRECTIONS NOTED
☐ MAKE CALCULATIONS
☐ REJECTED
REVIEW IS PERFORMED BY THE DEPARTMENT TO ENSURE THE CONTRACTOR'S GENERAL CONFORMANCE WITH THE DESIGN CONCEPT OF THE PROJECT AND COMPLIANCE WITH THE SPECIFICATIONS. THE CONTRACTOR IS SOLELY RESPONSIBLE FOR THE CORRECTNESS OF DIMENSIONS, PROPER CONSTRUCTION AND INSTALLATION METHODS, AND FOR FULFILLING ALL CONTRACTUAL REQUIREMENTS. ACCEPTANCE INDICATED HEREON DOES NOT RELIEVE THE CONTRACTOR OF THESE OBLIGATIONS.
BY Amir Zandieh DATE 04-11-13

NOTES

Ⓐ - PERFORATED METAL TO BE 90° BENT WITH 1 ½" OVERLAP EACH WAY.

Ⓑ - FRONT PERFORATED SHEETS TO BE SIZED WITH 1 ½" OVERLAP

Ⓒ - ANGLE SUPPORT MEMBERS TO BE PERFORATED METAL 90° BENT 1 ½" X 1 ½"

ALL ANCHORING BOLTS TO BE S.S. ¼" HEX LAGS W/ ALLIGATOR ANCHOR.

ALL FASTENING NUTS/BOLTS TO BE S.S. ¼".

ITEM	DESCRIPTION	MATERIAL	SIZE
1	PERF. METAL	304 STAINLESS STEEL	3/16" DIA 14 GAUGE
2	3/16 DIA. PERF. ANGLE	304 STAINLESS STEEL	1 1/2" X 1 1/2" X H
3	3/16 DIA. PERF. ANGLE	304 STAINLESS STEEL	1 1/2" X 1 1/2" X H
4	3/16 DIA. PERF. ANGLE	304 STAINLESS STEEL	1 1/2" X 1 1/2" X H

[ENTIRE UNIT CONSTRUCTED OF 3/16 DIA. PERF. METAL]

SAMPLE

Manufactured and Installed Exclusively by:
G2 Construction, Inc.
(714) 748- 42- 42
info@g2construction.com
CA Lic. # 801253 A, C-8
13331 Garden Grove Blvd, Suite H
Garden Grove, CA 92843

ALL G2 DRAWINGS

EXEMPT FROM
CA. PUBLIC RECORDS ACT
(DO NOT DISTRIBUTE)

LOS ANGELES COUNTY
DEPARTMENT OF PUBLIC WORKS
☒ ACCEPTED
☐ MAKE CORRECTIONS NOTED
☐ REVISE CALCULATIONS
☐ REJECTED

REVIEW IS PERFORMED BY THE DEPARTMENT TO ENSURE THE CONTRACTOR'S GENERAL CONFORMANCE WITH THE DESIGN CONCEPT OF THE PLANS AND SPECIFICATIONS. PURSUANT TO THE SPECIFICATIONS, THE CONTRACTOR IS SOLELY RESPONSIBLE FOR THE CORRECTNESS OF DIMENSIONS, PROPER CONSTRUCTION AND INSTALLATION METHODS, AND FOR FULFILLING ALL CONTRACTUAL REQUIREMENTS. ACCEPTANCE INDICATED HEREIN DOES NOT RELIEVE THE CONTRACTOR OF THESE OBLIGATIONS.

BY Amir Zandieh DATE 04-11-13

CASE # 1.- FRONT WALL WITH DEFLECTOR

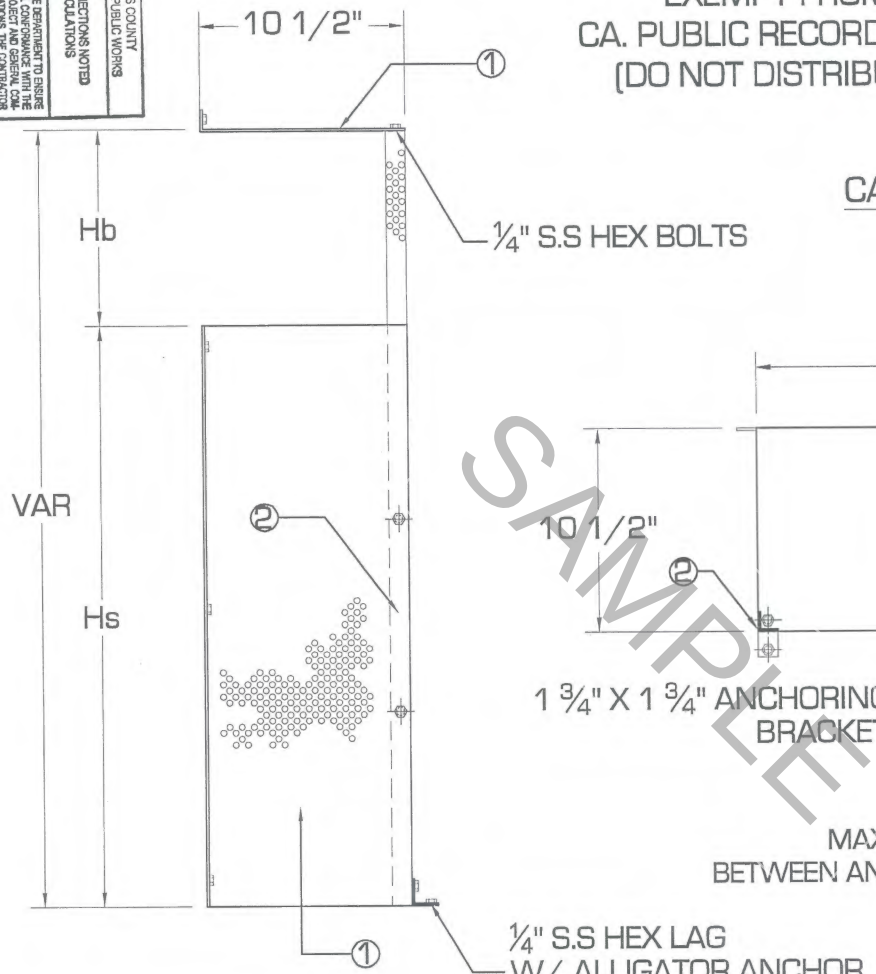

SIDE VIEW

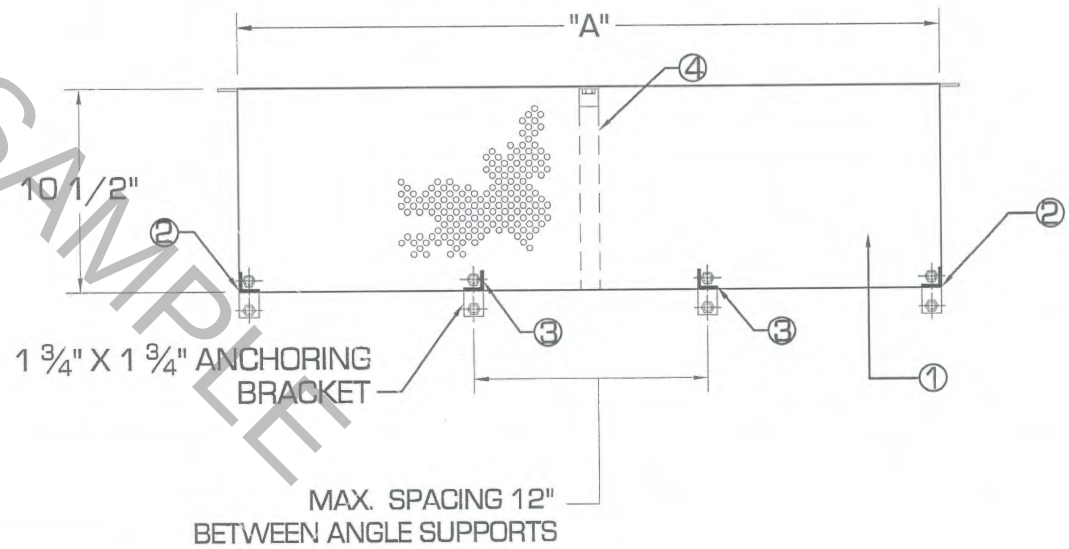

PLAN VIEW

SAMPLE

DRAWINGS NOT TO SCALE

[ENTIRE UNIT CONSTRUCTED OF 3/16 DIA. PERF. METAL]

ITEM	DESCRIPTION	MATERIAL	SIZE
①	PERF. METAL	304 STAINLESS STEEL	3/16" DIA 14 GAUGE
②	3/16 DIA. PERF. ANGLE	304 STAINLESS STEEL	1 1/2" X 1 1/2" X H
③	3/16 DIA. PERF. ANGLE	304 STAINLESS STEEL	1 1/2" X 1 1/2" X H
④	3/16 DIA. PERF. ANGLE	304 STAINLESS STEEL	1 1/2" X 1 1/2" X H

Manufactured and Installed Exclusvely by:
G2 Construction, Inc.
(714) 748- 42- 42
info@g2construction.com
CA Lic. # 801253 A, C-8
13331 Garden Grove Blvd, Suite H
Garden Grove, CA 92843

ALL G2 DRAWINGS

EXEMPT FROM
CA. PUBLIC RECORDS ACT
(DO NOT DISTRIBUTE)

CASE # 1.- FRONT WALL WITH DEFLECTOR

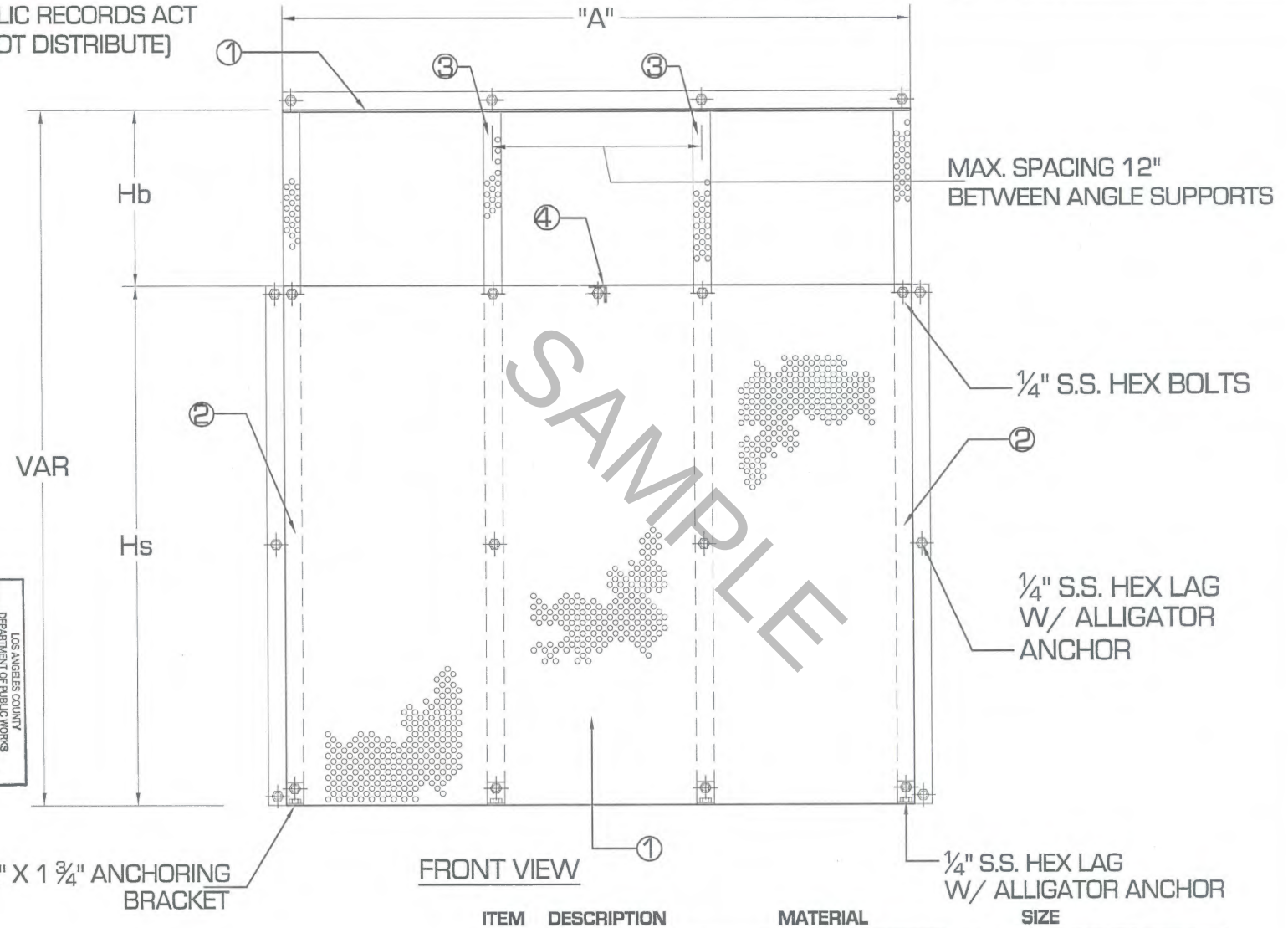

FRONT VIEW

SAMPLE

LOS ANGELES COUNTY
DEPARTMENT OF PUBLIC WORKS
☒ ACCEPTED
☐ MAKE CORRECTIONS NOTED
☐ REVISE CALCULATIONS
☐ REJECTED

REVIEW IS PERFORMED BY THE DEPARTMENT TO ENSURE THE CONTRACTOR'S GENERAL CONFORMANCE WITH THE DESIGN CONCEPT OF THE PROJECT AND GENERAL COMPLIANCE WITH THE SPECIFICATIONS. THE CONTRACTOR IS SOLELY RESPONSIBLE FOR THE CORRECTNESS OF DIMENSIONS, PROPER CONSTRUCTION AND INSTALLATION METHODS, AND FOR FULFILLING ALL CONTRACTUAL REQUIREMENTS. ACCEPTANCE INDICATED HEREON DOES NOT RELIEVE THE CONTRACTOR OF THESE OBLIGATIONS.

BY Amir Zandieh DATE 04-11-13

DRAWINGS NOT TO SCALE

(ENTIRE UNIT CONSTRUCTED OF 3/16 DIA. PERF. METAL)

ITEM	DESCRIPTION	MATERIAL	SIZE
1	PERF. METAL	304 STAINLESS STEEL	3/16" DIA 14 GAUGE
2	3/16 DIA. PERF. ANGLE	304 STAINLESS STEEL	1 1/2" X 1 1/2" X H
3	3/16 DIA. PERF. ANGLE	304 STAINLESS STEEL	1 1/2" X 1 1/2" X H
4	3/16 DIA. PERF. ANGLE	304 STAINLESS STEEL	1 1/2" X 1 1/2" X H

Manufactured and Installed Exclusvely by:
G2 Construction, Inc.
(714) 748- 42- 42
info@g2construction.com
CA Lic. # 801253 A, C-8
13331 Garden Grove Blvd, Suite H
Garden Grove, CA 92843

ALL G2 DRAWINGS

EXEMPT FROM
CA. PUBLIC RECORDS ACT
(DO NOT DISTRIBUTE)

CASE # 2.- FRONT WALL CORNER WITH DEFLECTOR

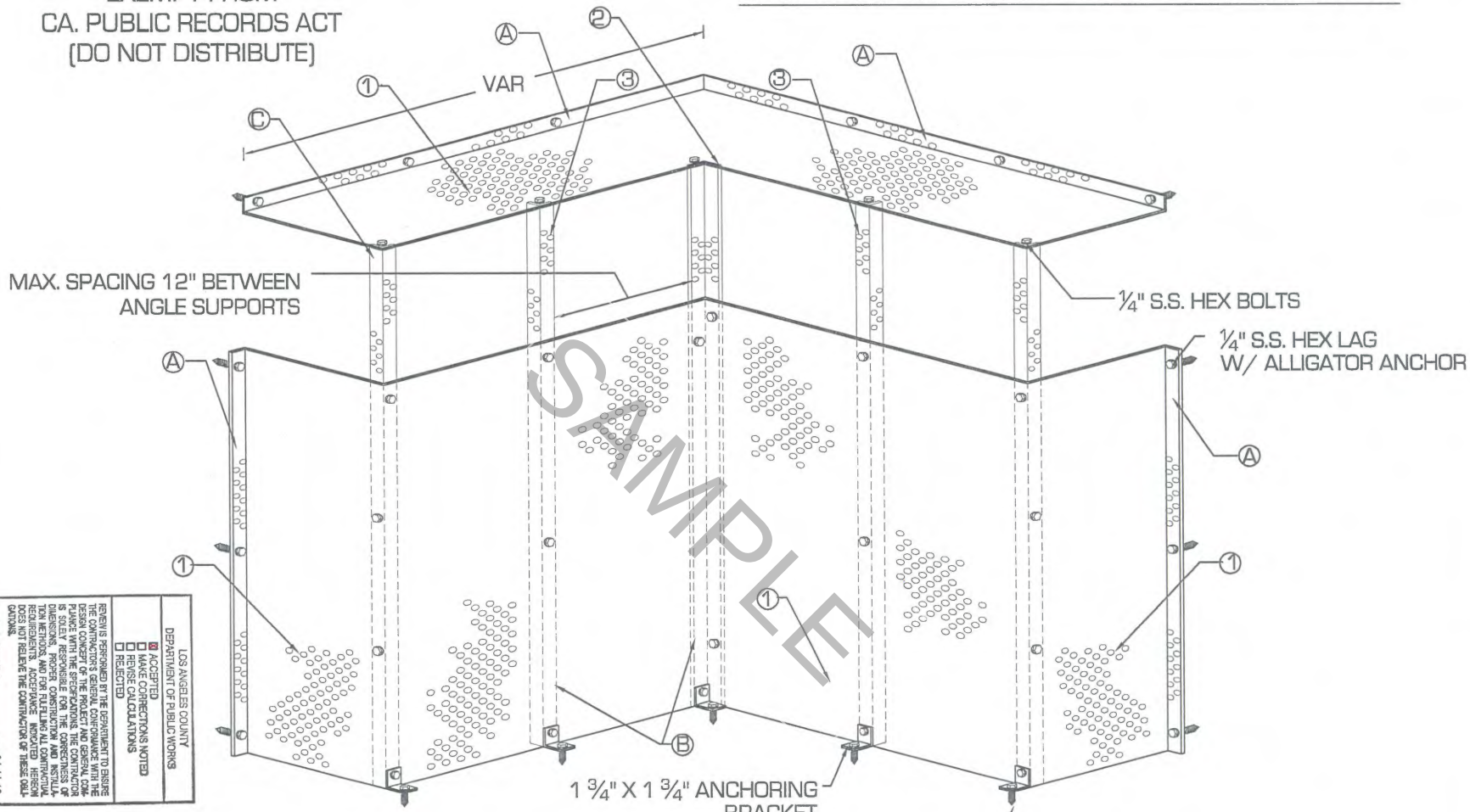

SAMPLE

LOS ANGELES COUNTY
DEPARTMENT OF PUBLIC WORKS
☒ ACCEPTED
☐ MAKE CORRECTIONS NOTED
☐ REVISE CALCULATIONS
☐ REJECTED

REVIEW IS PERFORMED BY THE DEPARTMENT TO ENSURE THE CONTRACTOR'S GENERAL CONFORMANCE WITH THE DESIGN CONCEPT OF THE PROJECT AND GENERAL COMPLIANCE WITH THE SPECIFICATIONS. THE CONTRACTOR IS SOLELY RESPONSIBLE FOR THE CORRECTNESS OF DIMENSIONS, PROPER CONSTRUCTION AND INSTALLATION METHODS, AND FOR FULFILLING ALL CONTRACTUAL REQUIREMENTS. ACCEPTANCE INDICATED HEREON DOES NOT RELIEVE THE CONTRACTOR OF THESE OBLIGATIONS.

BY Amir Zandieh DATE 04-11-13

REAR VIEW

(ENTIRE UNIT CONSTRUCTED OF 3/16 DIA. PERF. METAL)

NOTES

Ⓐ- PERFORATED METAL TO BE 90° BENT WITH 1 ½" OVERLAP EACH WAY.

Ⓑ- FRONT PERFORATED SHEETS TO BE SIZED WITH 1 ½" OVERLAP

Ⓒ- ANGLE SUPPORT MEMBERS TO BE PERFORATED METAL 90° BENT 1 ½" X 1 ½"

ALL ANCHORING BOLTS TO BE S.S. ¼" HEX LAGS. W/ ALLIGATOR ANCHOR.

ALL FASTENING NUTS/BOLTS TO BE S.S. 3/16".

ITEM	DESCRIPTION	MATERIAL	SIZE
1	PERF. METAL	304 STAINLESS STEEL	3/16" DIA 14 GAUGE
2	3/16 DIA. PERF. ANGLE	304 STAINLESS STEEL	1 1/2" X 1 1/2" X H
3	3/16 DIA. PERF. ANGLE	304 STAINLESS STEEL	1 1/2" X 1 1/2" X H

Manufactured and Installed Exclusvely by:
G2 Construction, Inc.
(714) 748- 42- 42
info@g2construction.com
CA Lic. # 801253 A, C-8
13331 Garden Grove Blvd, Suite H
Garden Grove, CA 92843

ALL G2 DRAWINGS

EXEMPT FROM
CA. PUBLIC RECORDS ACT
(DO NOT DISTRIBUTE)

LOS ANGELES COUNTY
DEPARTMENT OF PUBLIC WORKS

☒ ACCEPTED
☐ MAKE CORRECTIONS NOTED
☐ REVISE CALCULATIONS
☐ REJECTED

REVIEW IS PERFORMED BY THE DEPARTMENT TO ENSURE THE CONTRACTOR'S GENERAL CONFORMANCE WITH THE DESIGN CONCEPT OF THE PROJECT AND GENERAL COMPLIANCE WITH THE SPECIFICATIONS. THE CONTRACTOR IS SOLELY RESPONSIBLE FOR THE ADEQUACY OF THE DESIGN, FABRICATION AND INSTALLATION METHODS, AND FOR FULFILLING ALL CONTRACTUAL REQUIREMENTS. ACCEPTANCE INDICATED HEREON DOES NOT RELIEVE THE CONTRACTOR OF THESE OBLIGATIONS.

BY Amir Zandieh DATE 04-11-13

CASE # 2.- FRONT WALL CORNER WITH DEFLECTOR

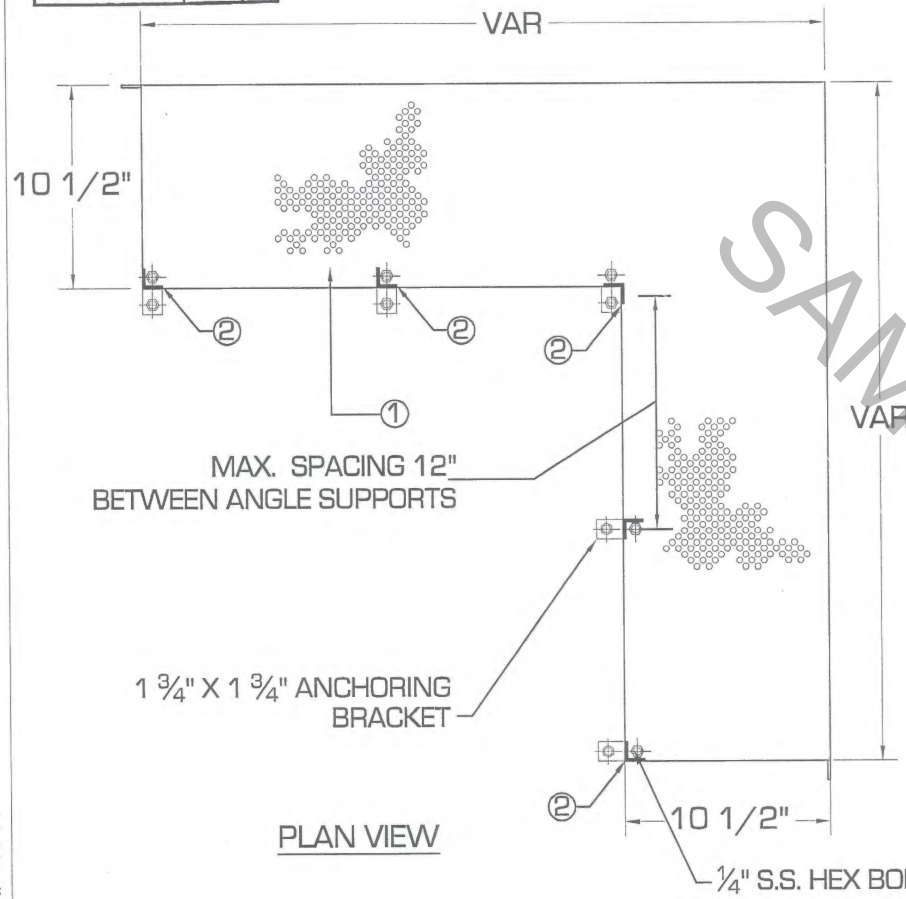

PLAN VIEW

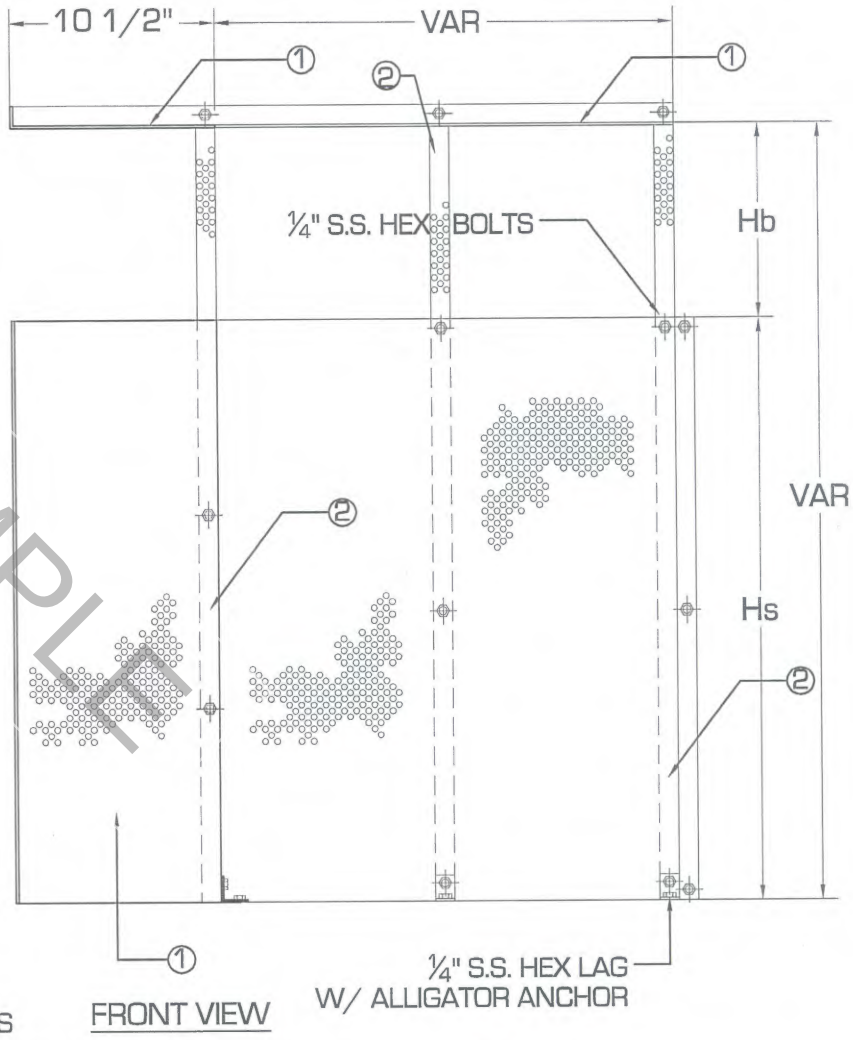

FRONT VIEW

DRAWINGS NOT TO SCALE

(ENTIRE UNIT CONSTRUCTED OF 3/16 DIA. PERF. METAL)

ITEM	DESCRIPTION	MATERIAL	SIZE
1	PERF. METAL	304 STAINLESS STEEL	3/16" DIA 14 GAUGE
2	3/16 DIA. PERF. ANGLE	304 STAINLESS STEEL	1 1/2" X 1 1/2" X H
3	3/16 DIA. PERF. ANGLE	304 STAINLESS STEEL	1 1/2" X 1 1/2" X H

SAMPLE

Manufactured and Installed Exclusively by:
G2 Construction, Inc.
(714) 748- 42- 42
info@g2construction.com
CA Lic. # 801253 A, C-8
13331 Garden Grove Blvd, Suite H
Garden Grove, CA 92843

CURB OPENING CATCH BASINS

ALL G2 DRAWINGS

EXEMPT FROM
CA. PUBLIC RECORDS ACT
(DO NOT DISTRIBUTE)

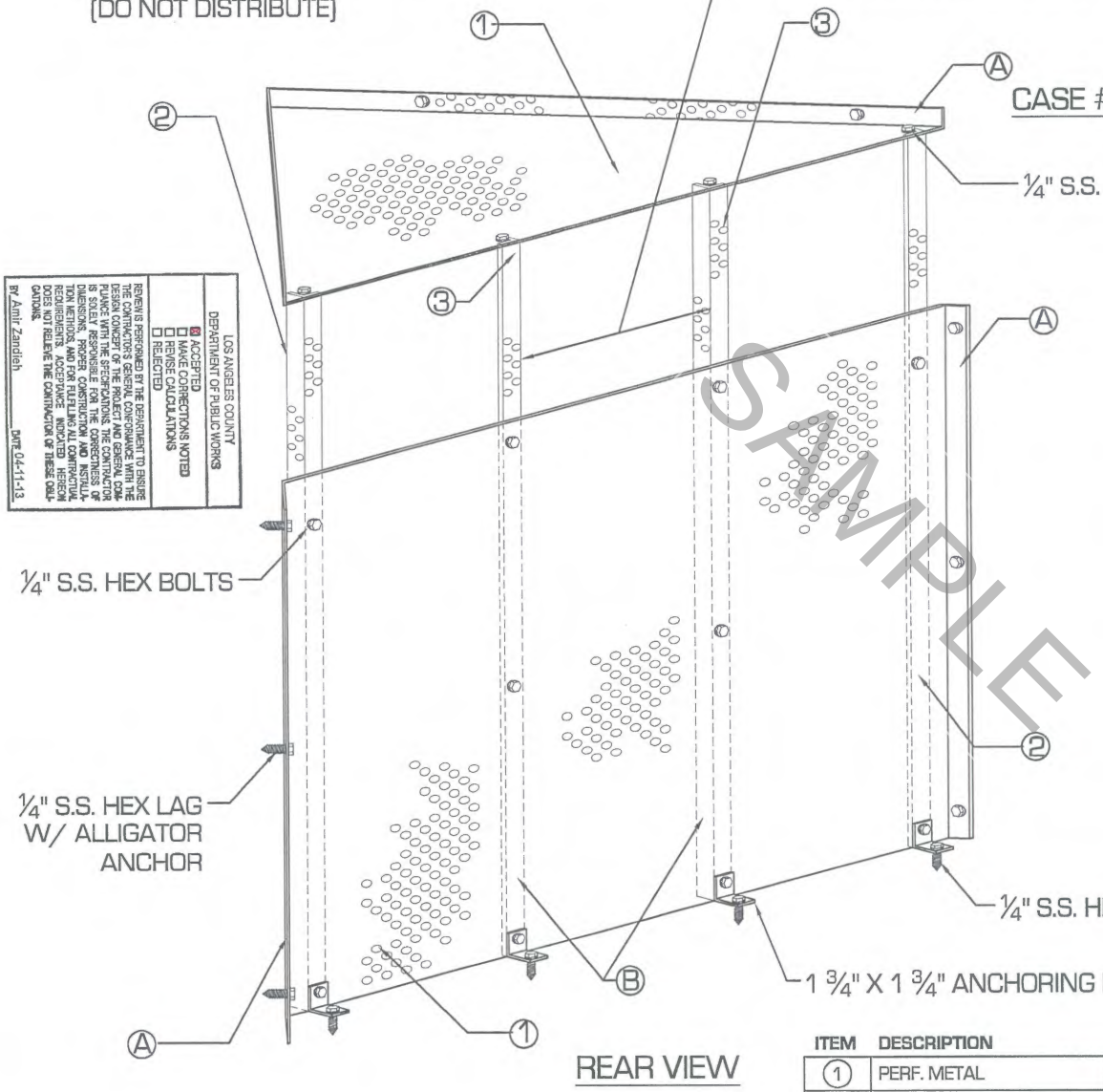

LOS ANGELES COUNTY
DEPARTMENT OF PUBLIC WORKS
☒ ACCEPTED
☐ MAKE CORRECTIONS NOTED
☐ REVISE CALCULATIONS
☐ REJECTED
REVIEW IS PERFORMED BY THE DEPARTMENT TO ENSURE THE CONTRACTOR'S GENERAL CONFORMANCE WITH THE DESIGN CONCEPT OF THE PROJECT AND GENERAL COMPLIANCE WITH THE SPECIFICATIONS, PLANS, CALCULATIONS, ELEVATIONS, CORRECTNESS OF DIMENSIONS, PROPER CONSTRUCTION AND INSTALLATION METHODS, AND FOR ENFORCING ALL CONTRACTUAL REQUIREMENTS. ACCEPTANCE INDICATED HEREON DOES NOT RELIEVE THE CONTRACTOR OF THESE OBLIGATIONS.
by Amir Zandieh DATE 04-11-13

CASE # 4.- FRONT CORNER WITH DEFLECTOR

NOTES

Ⓐ - PERFORATED METAL TO BE 90° BENT WITH 1 ½" OVERLAP EACH WAY.

Ⓑ - FRONT PERFORATED SHEETS TO BE SIZED WITH 1 ½" OVERLAP

Ⓒ - ANGLE SUPPORT MEMBERS TO BE PERFORATED METAL 90° BENT 1 ½" X 1 ½"

ALL ANCHORING BOLTS TO BE S.S. ¼" HEX LAGS W/ ALLIGATOR ANCHOR.

ALL FASTENING NUTS/BOLTS TO BE S.S. 3/16".

REAR VIEW

ITEM	DESCRIPTION	MATERIAL	SIZE
1	PERF. METAL	304 STAINLESS STEEL	3/16" DIA 14 GAUGE
2	3/16 DIA. PERF. ANGLE	304 STAINLESS STEEL	1 1/2" X 1 1/2" X H
3	3/16 DIA. PERF. ANGLE	304 STAINLESS STEEL	1 1/2" X 1 1/2" X H

[ENTIRE UNIT CONSTRUCTED OF 3/16 DIA. PERF. METAL]

Manufactured and Installed Exclusively by:
G2 Construction, Inc.
(714) 748- 42- 42
info@g2construction.com
CA Lic. # 801253 A, C-8
13331 Garden Grove Blvd, Suite H
Garden Grove, CA 92843

CURB OPENING CATCH BASINS

ALL G2 DRAWINGS

EXEMPT FROM
CA. PUBLIC RECORDS ACT
(DO NOT DISTRIBUTE)

CASE # 4.- FRONT CORNER WITH DEFLECTOR

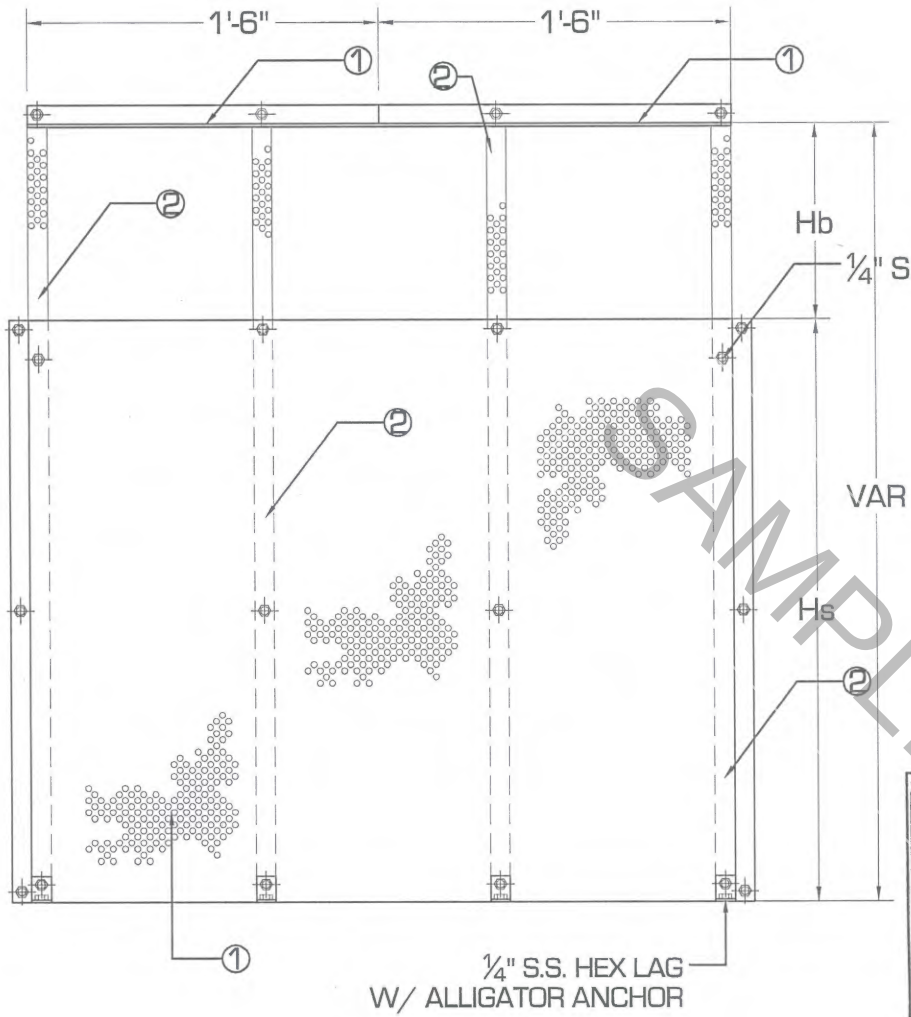

FRONT VIEW

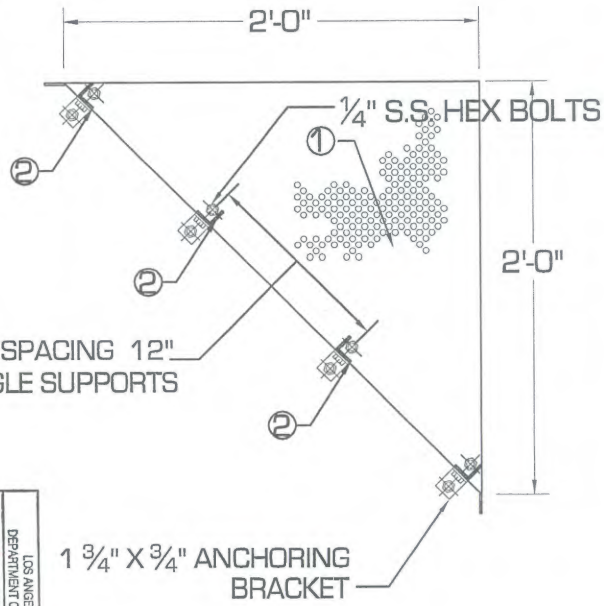

PLAN VIEW

LOS ANGELES COUNTY
DEPARTMENT OF PUBLIC WORKS
☒ ACCEPTED
☐ MAKE CORRECTIONS NOTED
☐ REVISE CALCULATIONS
☐ REJECTED

REVIEW IS PERFORMED BY THE DEPARTMENT TO ENSURE THE DRAWINGS ARE IN GENERAL CONFORMANCE WITH THE DESIGN CONCEPT OF THE PROJECT AND GENERAL COMPLIANCE WITH THE SPECIFICATIONS. THE CONTRACTOR IS SOLELY RESPONSIBLE FOR THE CORRECTNESS OF DIMENSIONS, PROPER CONSTRUCTION AND INSTALLATION METHODS, AND FOR FULFILLING ALL CONTRACTUAL REQUIREMENTS. ACCEPTANCE HEREOF DOES NOT RELIEVE THE CONTRACTOR OF THESE OBLIGATIONS.

by Amir Zandieh date 04-11-13

SAMPLE

ITEM	DESCRIPTION	MATERIAL	SIZE
1	PERF. METAL	304 STAINLESS STEEL	3/16" DIA 14 GAUGE
2	3/16 DIA. PERF. ANGLE	304 STAINLESS STEEL	1 1/2" X 1 1/2" X H
3	3/16 DIA. PERF. ANGLE	304 STAINLESS STEEL	1 1/2" X 1 1/2" X H

DRAWINGS NOT TO SCALE

[ENTIRE UNIT CONSTRUCTED OF 3/16 DIA. PERF. METAL]

Manufactured and Installed Exclusively by:
G2 Construction, Inc.
(714) 748- 42- 42
info@g2construction.com
13331 Garden Grove Blvd, Suite H
Garden Grove, CA 92843
CA Lic. # 801253 A, C-8

G2 Construction, Inc.

Model: CL12

Patent Pending

EXEMPT FROM CA.
PUBLIC RECORDS ACT
DO NOT DISTRIBUTE

REAR VIEW "G2 CAM LOCK SYSTEM 2012"

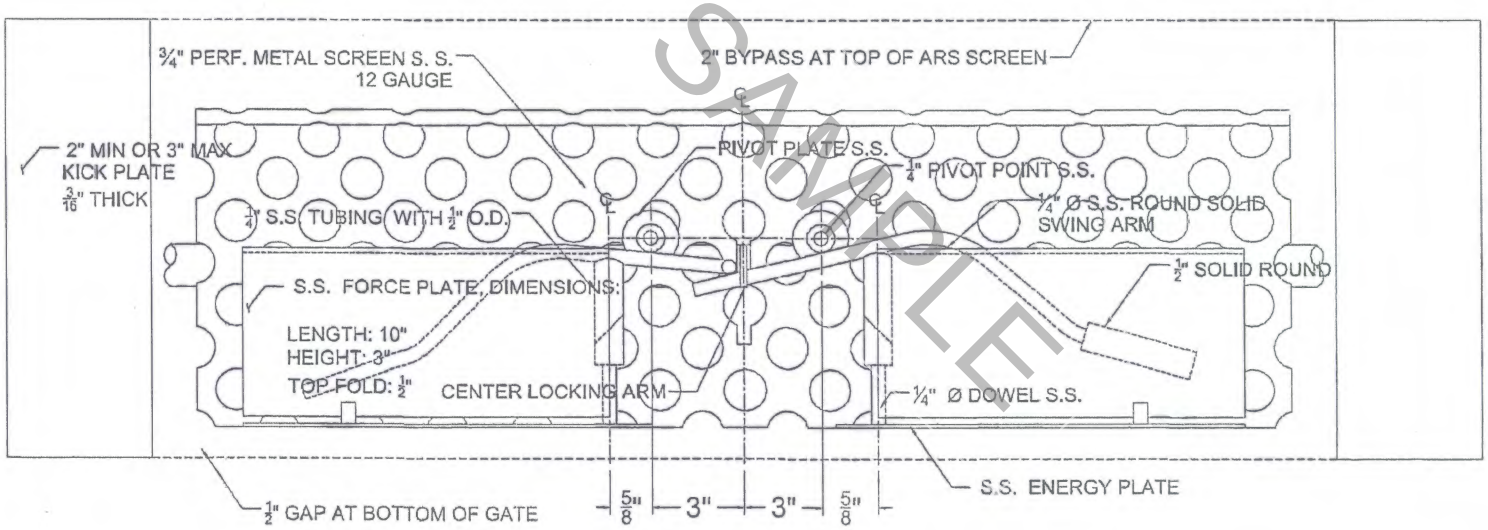

SAMPLE

DATE: 10/23/2012
DRAWINGS NOT TO SCALE
PATENT PENDING

DRAWING: 1 OF 3

PROPRIETORY PROPERTY
DOUBLE CAM LOCKING TECHNOLOGY

LOS ANGELES COUNTY
DEPARTMENT OF PUBLIC WORKS

☒ ACCEPTED
☐ MAKE CORRECTIONS NOTED
☐ REVISE CALCULATIONS
☐ REJECTED

REVIEW IS PERFORMED BY THE DEPARTMENT TO ENSURE THE CONTRACTOR'S GENERAL CONFORMANCE WITH THE DESIGN CONCEPT OF THE PROJECT AND GENERAL COMPLIANCE WITH THE SPECIFICATIONS. THE CONTRACTOR IS SOLELY RESPONSIBLE FOR THE CORRECTNESS OF DIMENSIONS, PROPER CONSTRUCTION AND INSTALLATION METHODS, AND FOR FULFILLING ALL CONTRACTUAL REQUIREMENTS. ACCEPTANCE INDICATED HEREON DOES NOT RELIEVE THE CONTRACTOR OF THESE OBLIGATIONS.

BY Amir Zandieh DATE 04-11-13

Manufactured and Installed Exclusvely by:
G2 Construction, Inc.
(714) 748-4242 - OFFICE
(714) 448-8080 - CELL
jalvarado@g2construction.com
CA Lic. # 801253 A, C-8, C-60
13331 Garden Grove Blvd, Suite K
Garden Grove, CA 92843

ISOMETRIC VIEW "G2 CAM LOCK SYSTEM 2012"

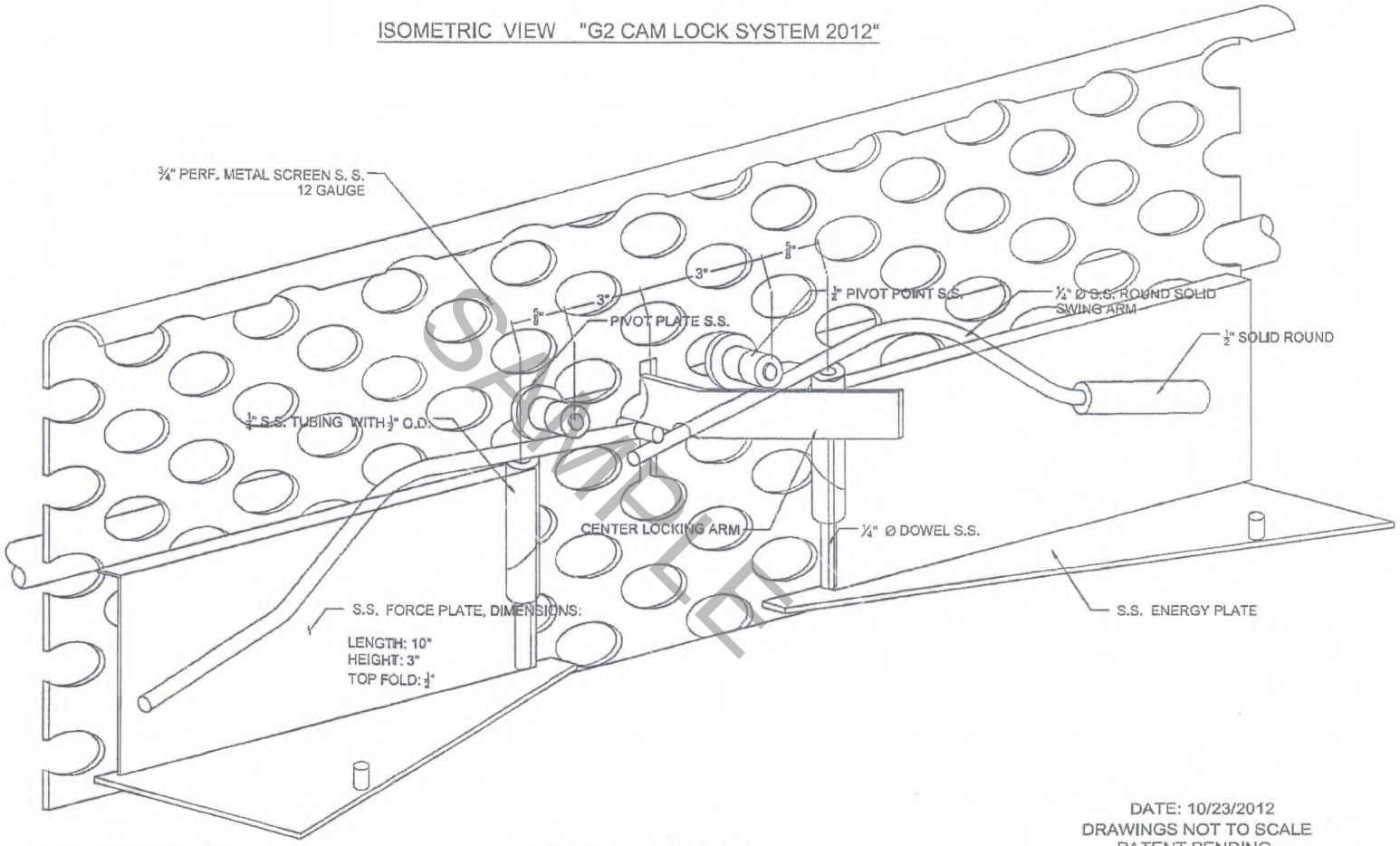

SAMPLE

DATE: 10/23/2012
DRAWINGS NOT TO SCALE
PATENT PENDING

G2 Construction, Inc.

Model: CL12

Patent Pending

EXEMPT FROM CA.
PUBLIC RECORDS ACT
DO NOT DISTRIBUTE

DRAWING: 2 OF 3

PROPRIETORY PROPERTY
DOUBLE CAM LOCKING TECHNOLOGY

LOS ANGELES COUNTY
DEPARTMENT OF PUBLIC WORKS

☒ ACCEPTED
☐ MAKE CORRECTIONS NOTED
☐ REVISE CALCULATIONS
☐ REJECTED

REVIEW IS PERFORMED BY THE DEPARTMENT TO ENSURE THE CONTRACTOR'S GENERAL CONFORMANCE WITH THE DESIGN CONCEPT OF THE PROJECT AND GENERAL COMPLIANCE WITH THE SPECIFICATIONS. THE CONTRACTOR IS SOLELY RESPONSIBLE FOR THE CORRECTNESS OF DIMENSIONS, PROPER CONSTRUCTION AND INSTALLATION METHODS, AND FOR FULFILLING ALL CONTRACTUAL REQUIREMENTS. ACCEPTANCE INDICATED HEREON DOES NOT RELIEVE THE CONTRACTOR OF THESE OBLIGATIONS.

BY Amir Zandieh DATE 04-11-13

Manufactured and Installed Exclusvely by:
G2 Construction, Inc.
(714) 748-4242 - OFFICE
(714) 448-8080 - CELL
jalvarado@g2construction.com
CA Lic. # 801253 A, C-8, C-60
13331 Garden Grove Blvd, Suite K
Garden Grove, CA 92843

G2 Construction, Inc.

Model: CL12

Patent Pending

EXEMPT FROM CA.
PUBLIC RECORDS ACT
DO NOT DISTRIBUTE

SIDE VIEW "G2 CAM LOCK SYSTEM 2012"

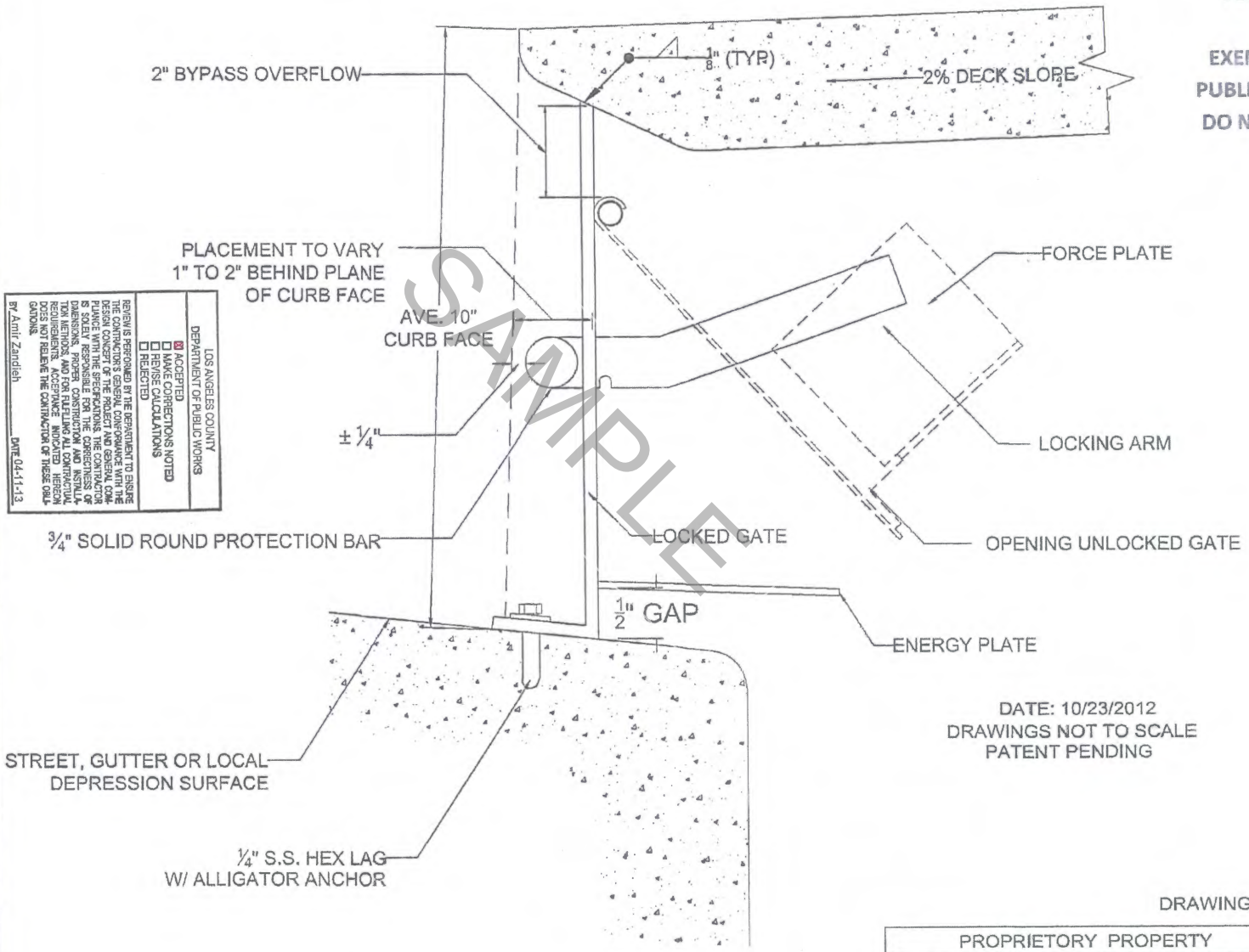

LOS ANGELES COUNTY
DEPARTMENT OF PUBLIC WORKS

☒ ACCEPTED
☐ MAKE CORRECTIONS NOTED
☐ REVISE CALCULATIONS
☐ REJECTED

REVIEW IS PERFORMED BY THE DEPARTMENT TO ENSURE THE CONTRACTOR'S GENERAL CONFORMANCE WITH THE DESIGN CONCEPT OF THE PROJECT AND GENERAL COMPLIANCE WITH THE SPECIFICATIONS. THE CONTRACTOR IS SOLELY RESPONSIBLE FOR THE CORRECTNESS OF DIMENSIONS, PROPER CONSTRUCTION AND INSTALLATION METHODS, AND FOR FULFILLING ALL CONTRACTUAL REQUIREMENTS. ACCEPTANCE INDICATED HEREON DOES NOT RELIEVE THE CONTRACTOR OF THESE OBLIGATIONS.

BY Amir Zandieh DATE 04-11-13

DATE: 10/23/2012
DRAWINGS NOT TO SCALE
PATENT PENDING

DRAWING: 3 OF 3

PROPRIETORY PROPERTY
DOUBLE CAM LOCKING TECHNOLOGY

SAMPLE

Manufactured and Installed Exclusvely by:
G2 Construction, Inc.
(714) 748- 4242 - OFFICE
(714) 448- 8080 - CELL
jalvarado@g2construction.com
CA Lic. # 801253 A, C-8, C-60
13331 Garden Grove Blvd, Suite K
Garden Grove, CA 92843