Omit this ← Print this

Trim to this line

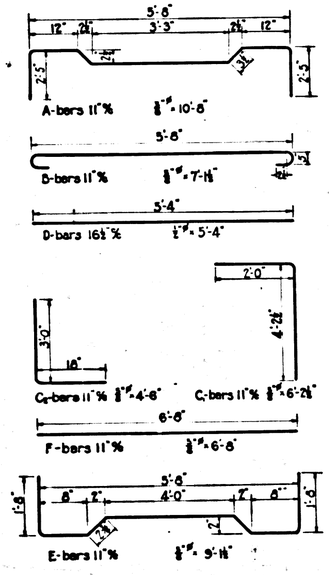

27 - ½" ϕ tie bars required

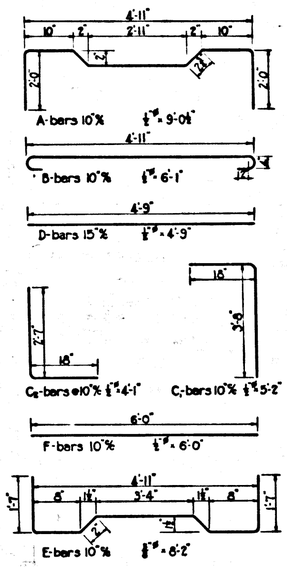

26 - ½" ϕ tie bars required.

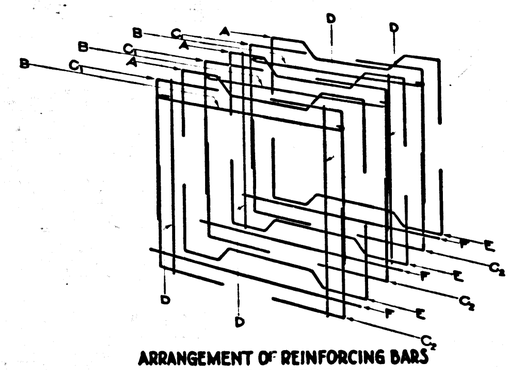

ARRANGEMENT OF REINFORCING BARS
SINGLE BOX SECTIONS
Tie bars not shown

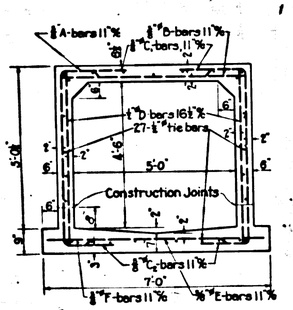

Top Slab Cover 7": Truck Loading
Concrete 0.48 cu.yd. per lin. ft.
Reinf. Steel 86 lbs. per lin. ft.

SECTION L
REINF. CONC. BOX 5'-0"×4'-6"
YUKON AVE. LINE
FROM STATION 102+70 TO STA. 109+30
Scale ½"=1'-0"

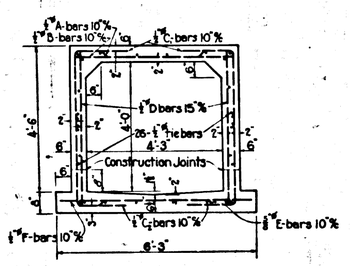

Top Slab Cover 2": Truck Loading.
Concrete 0.40 cu.yd. per lin. ft.
Reinf. Steel 64 lbs. per lin. ft.

SECTION M
REINF. CONC. BOX 4'-3"×4'-0"
YUKON AVE. LINE
FROM STATION 109+40 TO STA. 116+09.82
Scale ½"=1'-0"

NOTES:

All Reinforced Concrete shall be Class A-1 Concrete.

Dimensions for depth of Reinforcing Steel are from face of concrete to center of box.

Reinforcing bars shall be round, deformed bars of intermediate grade, billet steel or rail steel, unless otherwise specified, and at all splices shall be lapped 36 bar diameters.

Weep holes ¾ inch in diameter, spaced not more than 5 feet each way, shall be placed in each sidewall of box section unless otherwise specified.

CSB-1164-10
A 10 OF A 2

LENNOX DRAINAGE SYSTEM

OF THE COUNTY OF LOS ANGELES, CALIFORNIA

DETAILS OF BOX SECTIONS

SECTIONS G,H,I,J,K,L&M

FOR

YUKON AVENUE LINE

SHEET 10 OF 10 SHEETS

SCALES AS SHOWN — JUNE 1937

ALFRED JONES — COUNTY SURVEYOR

RECOMMENDED [signature] CHIEF DEPUTY — APPROVED [signature] COUNTY SURVEYOR

REFERENCE			
	DESIGNED	J.A. Pedigo L.B. Knox	JUNE 1937
Revised: 7-23-38	TRACED	J.A. Pedigo	JUNE 1937
	CHECKED	L.B. Knox J.A. Pedigo	JUNE 1937

(10)

Trim to this line

COUNTY SURVEYORS MAP NO. B-1164
SHEET NO. 10 OF 10 SHEETS

Trim to this line

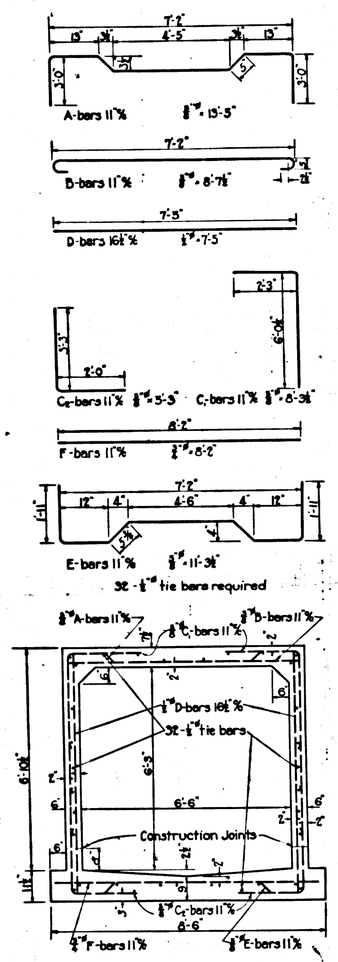

Top Slab Cover 6" ; Truck Loading
Concrete 0.69 cu.yd. per lin. ft.
Reinf. Steel 111. lbs. per lin. ft.

SECTION G
REINF. CONC. BOX 6'-6" × 6'-3"
YUKON AVE. LINE
FROM STATION 48+50 TO STA. 74+00
Scale ½" = 1'-0"

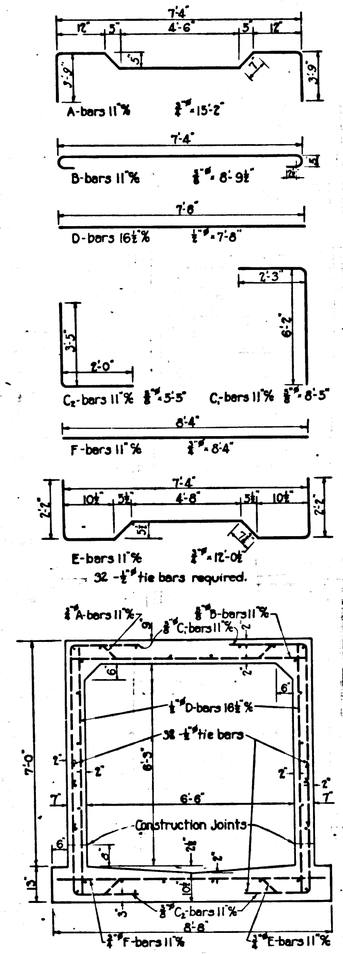

Top Slab Cover 11" ; Truck Loading
Concrete 0.81 cu.yd. per lin. ft.
Reinf. Steel 129. lbs. per lin. ft.

SECTION H
REINF. CONC. BOX 6'-6" × 6'-3"
YUKON AVE. LINE
FROM STATION 74+00 TO STA. 78+10
Scale ½" = 1'-0"

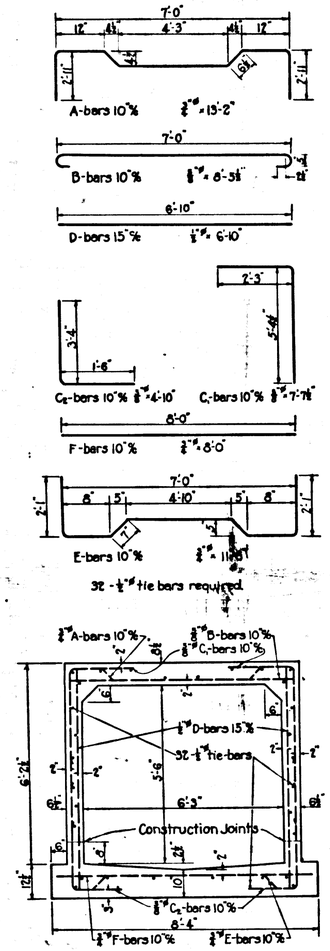

Top Slab Cover 11" ; Truck Loading
Concrete 0.72 cu.yd. per lin. ft.
Reinf. Steel 129. lbs. per lin. ft.

SECTION I
REINF. CONC. BOX 6'-3" × 5'-6"
YUKON AVE. LINE
FROM STATION 78+20 TO STA. 89+50
Scale ½" = 1'-0"

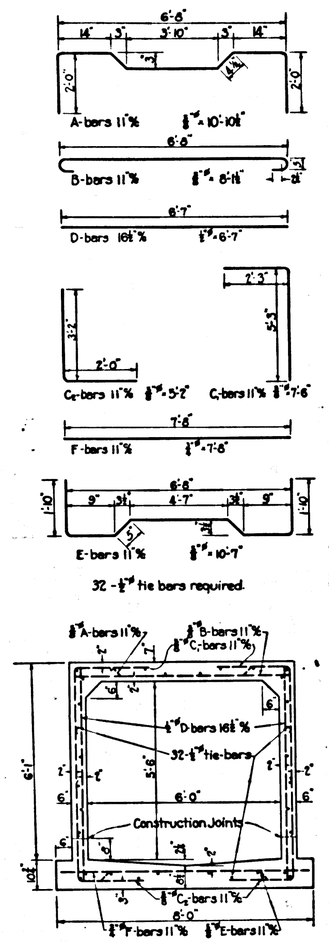

Top Slab Cover 6" ; Truck Loading
Concrete 0.61 cu.yd. per lin. ft.
Reinf. Steel 103 lbs. per lin. ft.

SECTION J
REINF. CONC. BOX 6'-0" × 5'-6"
YUKON AVE. LINE
FROM STATION 89+60 TO STA. 98+90
Scale ½" = 1'-0"

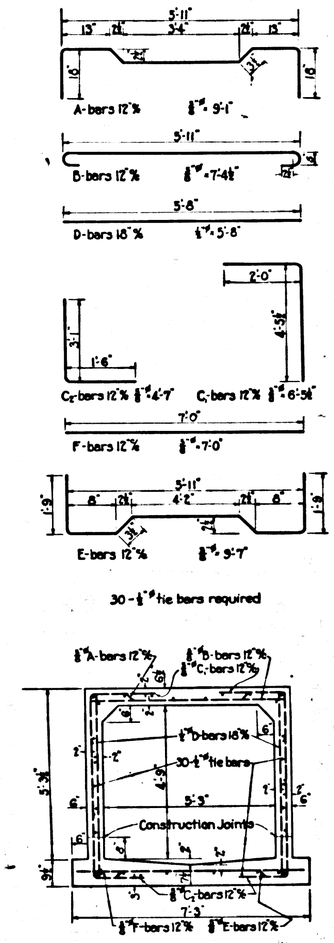

Top Slab Cover 6" ; Truck Loading
Concrete 0.51 cu.yd. per lin. ft.
Reinf. Steel 83 lbs. per lin. ft.

SECTION K
REINF. CONC. BOX 5'-3" × 4'-9"
YUKON AVE. LINE
FROM STATION 99+00 TO STA. 102+60
Scale ½" = 1'-0"

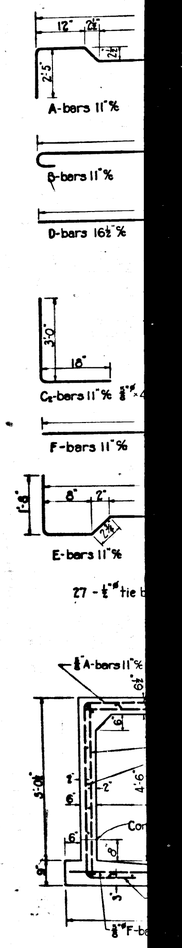

Top Slab Cov
Concrete
Reinf. Steel

SE
REINF. C
YUK
FROM STATI

CSB-1164-10
A2 OF A2