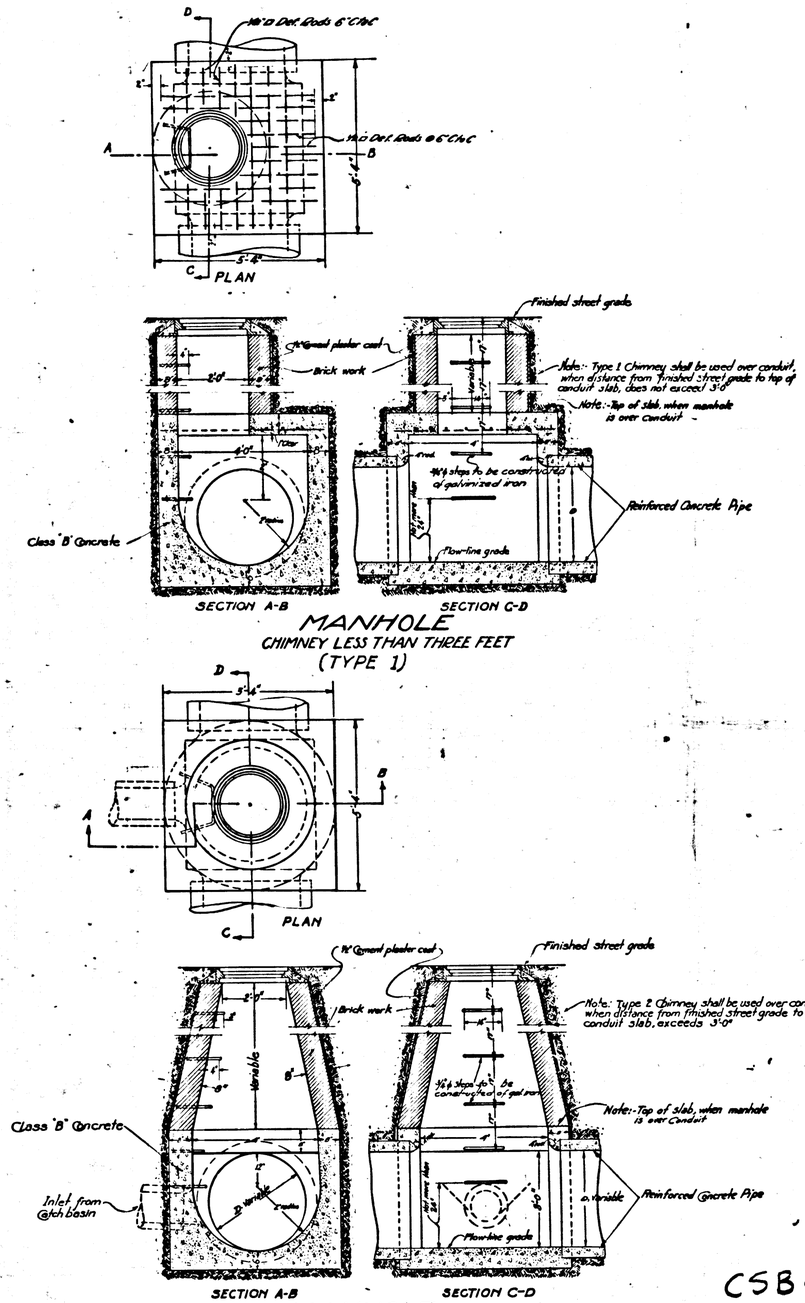

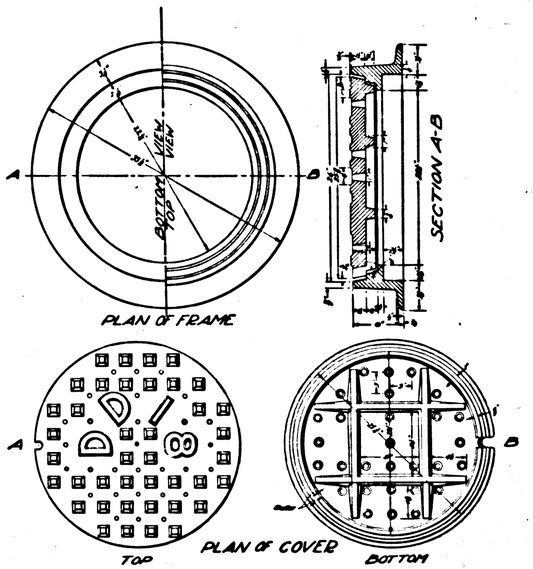

DRAINAGE DISTRICT IMPROVEMENT No 8

OF THE

COUNTY OF LOS ANGELES

DETAILS OF

MANHOLES

SEPTEMBER 1923

J.E. ROCKHOLD COUNTY SURVEYOR

SHEET 8 OF 12 SHEETS

Submitted: A L Warren, Senior Engineer

Approved: J.E. Rockhold, County Surveyor

Drawn by H.S. Duey - Checked by O.D. Reese

Approved as to form.
Edward T. Bishop
County Counsel
by E. R. Cunningham
Deputy

CSB-1180-8

A1 OF A1

COUNTY SURVEYOR'S MAP No B-1180
SHEET No 8 OF 12 SHEETS