ORM 13539 - 140
25

PACIFIC ELECTRIC RAILWAY COMPANY
TO
CITY OF LONG BEACH

140

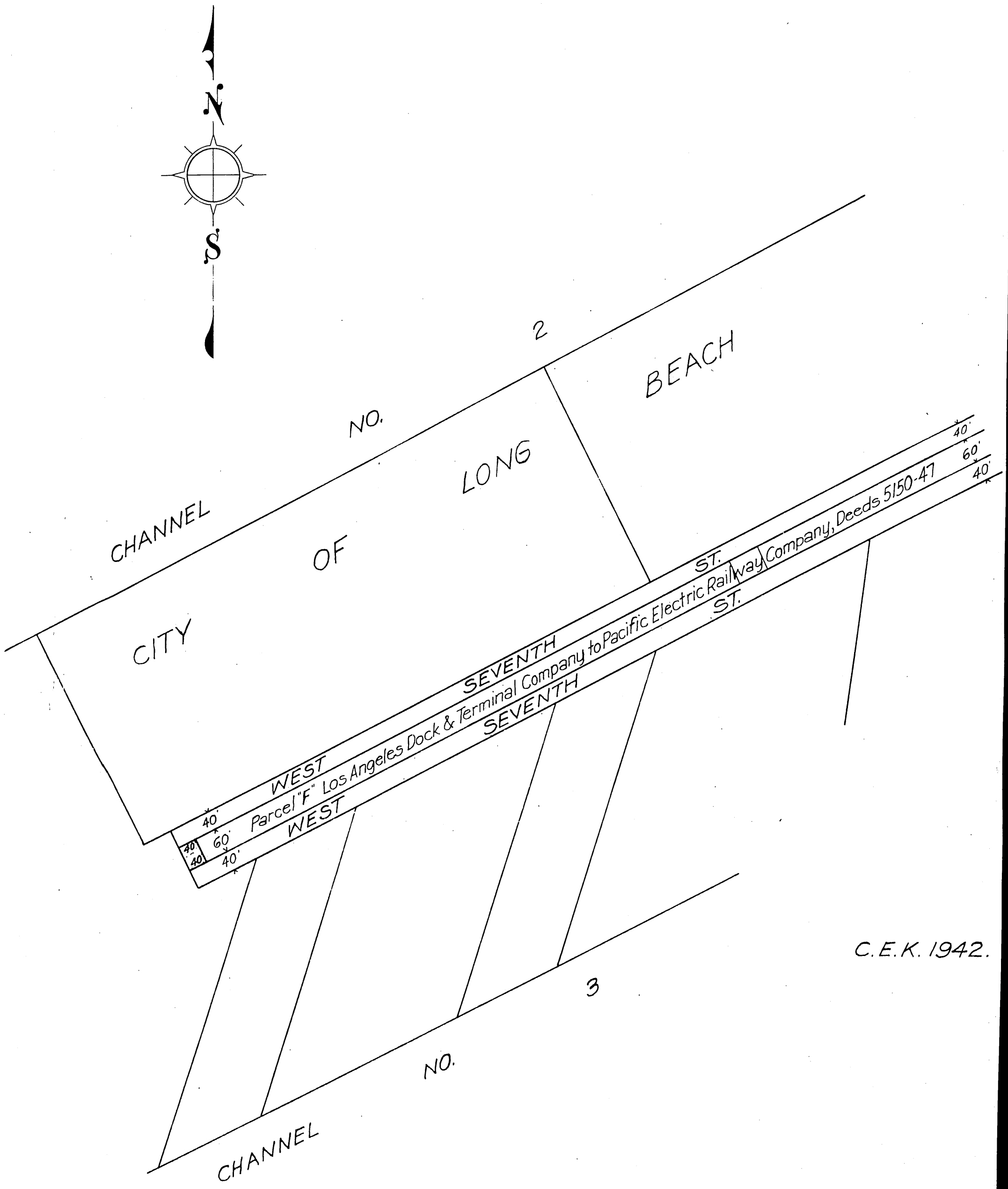


C.E.K. 1942.

E.P.
COMP. R.F.S.

INDEX 30
E:4-111
RECORDED — JULY 17, 1935.

O.R. 13539