Initial Study/
Mitigated Negative Declaration

Pacoima Spreading Grounds Improvement Project
City of Los Angeles, California

Prepared for

Los Angeles County Flood Control District
900 South Fremont Avenue
Alhambra, California 91803-1331

Prepared by

BonTerra Psomas
225 South Lake Avenue, Suite 1000
Pasadena, California 91101
T: (626) 351-2000

January 2016

TABLE OF CONTENTS

Section **Page**

Section 1.0 Introduction 1-1
1.1 Purpose of the Initial Study/Mitigated Negative Declaration 1-1
1.2 CEQA Process 1-1
1.3 Organization of the Initial Study/Mitigated Negative Declaration 1-2

Section 2.0 Environmental Setting and Project Description 2-1
2.1 Project Location 2-1
2.2 Project Background and Need 2-1
2.3 Project Site and Surrounding Area Characteristics 2-2
2.4 Project Description 2-3
2.5 Project Operation and Maintenance 2-7
2.6 Anticipated Project Approvals 2-7

Section 3.0 Environmental Checklist Form 3-1
3.1 Aesthetics 3-3
3.2 Agriculture and Forest Resources 3-5
3.3 Air Quality 3-7
3.4 Biological Resources 3-22
3.5 Cultural Resources 3-26
3.6 Geology and Soils 3-30
3.7 Greenhouse Gas Emissions 3-34
3.8 Hazards/Hazardous Materials 3-37
3.9 Hydrology and Water Quality 3-46
3.10 Land Use and Planning 3-51
3.11 Mineral Resources 3-53
3.12 Noise 3-54
3.13 Population and Housing 3-62
3.14 Public Services 3-64
3.15 Recreation 3-66
3.16 Transportation/Traffic 3-67
3.17 Utilities and Service Systems 3-99
3.18 Mandatory Findings of Significance 3-102

Section 4.0 Document Preparers and Contributors 4-1

Section 5.0 References 5-1

TABLES

Table **Page**

3-1 Other Agency Approvals and Requirements 2-8
3-1 California and National Ambient Air Quality Standards 3-8
3-2 Designations of Criteria Pollutants in the South Coast Air Basin 3-9
3-3 Estimated Maximum Daily Construction Emissions (lbs/day) 3-13
3-4 Screening of Maximum Localized Construction Emissions (lbs/day) 3-14
3-5 Local Fugitive Dust Concentrations 3-15
3-6 DPM Concentrations at Receptors and Cancer Risk 3-19
3-7 Annual GHG Emissions 3-36
3-9 Existing Noise Conditions 3-57
3-9 FTA Construction Noise Criteria 3-59
3-10 Maximum Construction Noise Levels 3-60
3-11 City of Los Angeles Intersection Impact Criteria 3-71
3-12 Project Trip Generation 3-72
3-13 Related Projects 3-74
3-14 Summary of Intersection Capacity Analysis – Alternative 1 (Concurrent Use of All Three Disposal Sites) 3-77
3-15 Summary of Intersection Capacity Analysis – Alternative 2 (Using Only Boulevard Pit) 3-81
3-16 Summary of Intersection Capacity Analysis – Alternative 3 (Using Only Sheldon Pit) 3-85
3-17 Summary of Intersection Capacity Analysis – Alternative 4 (Using Only Cal-Mat Pit) 3-89
3-18 Supplemental Intersection Analysis Summary 3-93
3-19 Supplemental Caltrans Freeway Segment Analysis Summary 3-95
3-20 Supplemental Caltrans Ramp Queuing Analysis Summary 3-96

EXHIBITS

Exhibit **Follows Page**

2-1 Regional Location and Local Vicinity 2-1
2-2 On-Site and Surrounding Conditions 2-1
2-3 Existing Facilities and Work Description 2-3
2-4 Proposed Site Plan 2-3
2-5 Intake Canal Detail 2-3
2-6 Outlet Weir Detail 2-3
2-7 Proposed Sediment Haul Routes 2-4
3-1 Air Dispersion Model Source and Receptor Locations Near the Project Site 3-18
3-2 Air Dispersion Model Source and Receptor Locations Near the Pits 3-18
3-3 Vegetation Types 3-23
3-4 Soil Boring Locations 3-39
3-5 Noise Monitoring Locations 3-56
3-6 Traffic Study Intersections 3-68

APPENDICES

Appendix

A Air Quality, Greenhouse Gas, and Health Risk Assessment
B Biological Technical Report
C-1 Cultural Resources Investigation
C-2 Phase I Paleontological Resources Assessment
D-1 Phase I Environmental Site Assessment
D-2 Phase II Environmental Site Assessment
E Noise Impact Analysis
F Traffic Impact Study

This page intentionally left blank

SECTION 1.0 INTRODUCTION

1.1 PURPOSE OF THE INITIAL STUDY/MITIGATED NEGATIVE DECLARATION

In accordance with the California Environmental Quality Act (CEQA) (*California Public Resources Code* §21000 et seq.) and the State CEQA Guidelines (*California Code of Regulations,* Title 14, §15000 et seq.), this Initial Study (IS) has been prepared as documentation for a Mitigated Negative Declaration (MND) for the proposed Los Angeles County Flood Control District (LACFCD) Pacoima Spreading Grounds Improvement Project (Project). This IS/MND includes a description of the Project; the location of the Project site; an evaluation of the potential environmental impacts of Project implementation; and recommended mitigation measures to lessen or avoid impacts on the environment.

Pursuant to Section 15367 of the State CEQA Guidelines, the LACFCD, now administered by the County of Los Angeles Department of Public Works (LACDPW), is the Lead Agency for the Project. The Lead Agency is the public agency that has the principal responsibility for carrying out a project and also has the authority to approve the Project and its accompanying environmental documentation. In addition to addressing the potential environmental impacts that would result from the Project, this IS/MND serves as the primary environmental document for future activities associated with the Project, including discretionary approvals requested or required for Project implementation.

The LACFCD, as the Lead Agency, has reviewed and revised, as necessary, all submitted drafts and technical studies and has commissioned the preparation of this IS/MND to reflect its independent judgment. Data for this IS/MND was obtained from on-site field observations and review of available technical studies, reports, guidelines, and data. The LACFCD has the authority to approve the Project and to adopt this IS/MND.

This IS/MND evaluates the potential environmental impacts of Project implementation; it includes significance determinations from the environmental analyses; it identifies regulatory requirements (RRs) that must be implemented and sets forth mitigation measures (MMs) that will lessen or avoid potentially significant Project impacts on the environment. The LACFCD will incorporate all MMs into the Mitigation Monitoring and Reporting Program (MMRP). Prior to mitigation, implementation of the Project would result in potentially significant impacts to Biological Resources, Cultural Resources, Noise, and Traffic. Implementation of MM BIO-1, MM CUL-1, MM NOI-1, and MM TRA-1, as detailed in Section 3.0, would reduce the potentially significant impacts related to these topical areas to a less than significant level. There would be no impact or less than significant impacts for all other topical areas.

1.2 CALIFORNIA ENVIRONMENTAL QUALITY ACT PROCESS

A preliminary draft Initial Study was prepared in 2014 for the Project and was posted to the LACFCD's website for public review and consideration. This 2016 IS/MND and its associated technical appendices replaces and supersedes the 2014 Initial Study.

A Notice of Intent to Adopt an MND (NOI) was mailed to the State Clearinghouse and affected responsible and trustee agencies and interested organizations and individuals, and it is on file at the Los Angeles County Registrar-Recorder/County Clerk in the City of Norwalk. A summary of the NOI was published in the *Los Angeles Times* on January 11, 2016 to announce the public review period. The IS/MND and associated technical reports are available online at http://dpw.lacounty.gov/wrd/Projects/PacoimaSG. Hard copies are available for public review during business hours at the Los Angeles County Department of Public Works (LACDPW) Headquarters (900 South Fremont Avenue, 2nd Floor in Alhambra, California) and at the Pacoima

Headquarters (900 South Fremont Avenue, 2nd Floor in Alhambra, California) and at the Pacoima Branch Library located at 13605 Van Nuys Boulevard in Los Angeles, California, during business hours.

There will be a 45-day public review period for the IS/MND, in accordance with and exceeding the requirements of Section 15073 of the State CEQA Guidelines. In reviewing the IS/MND, the reviewer should focus on the sufficiency of the document in identifying and analyzing the potential impacts on the environment and ways in which the potentially significant effects of the Project are avoided or lessened. Comments or questions on this IS/MND must be postmarked by 5:00 PM on February 25, 2016 and can be sent in writing by mail to the LACFCD at the address below; via email to SpreadingGrounds@dpw.lacounty.gov; or by fax to (626) 979-5436. Please include "Pacoima Spreading Grounds Improvement Project" in the subject line. Comments can be mailed to the following address:

Los Angeles County Flood Control District
900 South Fremont Avenue
Alhambra, California 91803
Attn: Pacoima Spreading Grounds Improvement Project

In accordance with Section 15074 of the State CEQA Guidelines, prior to approving the Project, the Los Angeles County Board of Supervisors (Board), acting as governing body of the LACFCD, will consider the proposed IS/MND together with any comments received during the public review process. The Board will adopt the proposed MND only if it finds that that there is no substantial evidence that the Project will have a significant effect on the environment and that the MND reflects the independent judgment and analysis of the Board.

1.3 ORGANIZATION OF THE INITIAL STUDY/MITIGATED NEGATIVE DECLARATION

This IS/MND is organized into the following sections:

Section 1, Introduction: This section provides an introduction to the purpose of an IS/MND and the CEQA process; it also provides an outline of the IS/MND organization.

Section 2, Environmental Setting and Project Description: This section provides a description of the Project's location, existing environmental setting, the background and need for the Project; and Project's components, construction scenario, operational and maintenance needs; and required Project-related approvals.

Section 3, Environmental Checklist Form: The completed CEQA checklist form provides an overview of the potential impacts that may result from Project implementation. The environmental checklist form also includes "mandatory findings of significance", in accordance with CEQA requirements. This section contains the analysis of environmental impacts identified in the environmental checklist and identifies mitigation measures to eliminate potential significant effects or to reduce them to a less than significant level.

Section 4, Document Preparers and Contributors: This section includes a list of those persons who participated in writing this document.

Section 5, References: This section identifies the references used to prepare the IS/MND.

SECTION 2.0 ENVIRONMENTAL SETTING AND PROJECT DESCRIPTION

2.1 PROJECT LOCATION

The Project site is the approximate 169-acre, County-owned Pacoima Spreading Grounds located in the City of Los Angeles (City) in the north-central portion of the San Fernando Valley at the intersection of Paxton Street and Arleta Avenue. The Los Angeles community of Mission Hills is located generally to the northwest of the site, and the community of Arleta is located generally to the southeast. The intersection of Interstate (I) 5 and State Route (SR) 118 is located less than one-quarter mile to the north of the site. Primary access to the site is via the Paxton Street from I-5 located immediately east of the site, as depicted in Exhibit 2-1, Regional Location and Local Vicinity. Vehicular access to the Pacoima Spreading Grounds by the Los Angeles County Flood Control District (LACFCD) is via Arleta Avenue and Devonshire Street.

2.2 PROJECT BACKGROUND AND NEED

The Pacoima Spreading Grounds was built in the early 1930s and was first used in the 1932–1933 storm season. Major reconfigurations to the basins, located south of Arleta Avenue, occurred in 1942, 1984, and most significantly in 1986–1991, resulting in the current basin configuration of 12 basins, including 10 spreading basins and 2 desilting basins. Modifications to the headworks, located north of Arleta Avenue, occurred in 1939, 1953, and 1986. The most significant modification to the headworks was in 1953, when the U.S. Army Corps of Engineers (USACE) constructed the Pacoima Diversion Channel and the radial gate was installed in the channel.

The Pacoima Spreading Grounds facility is one of the major water conservation facilities that recharge the San Fernando Valley Groundwater Basin (Basin). The facility is comprised of 12 basins with interbasin spillways and related structures; maintenance roads (both paved and dirt); an overflow weir for emergencies; and the headworks, including the intake canal and radial gate. The existing Pacoima Spreading Grounds conditions are illustrated on Exhibit 2-2, On-Site and Surrounding Conditions. Currently, water is diverted from the Pacoima Diversion Channel using the radial gate located at the northeast end of the site. The water then flows through the intake canal, passing through pipes under Arleta Avenue to the basins to be percolated into the groundwater basin.

The Pacoima Spreading Grounds infiltrate water that is supplied by the Metropolitan Water District of Southern California (i.e., imported water); local storm flows; controlled releases from Pacoima Dam, partially controlled flow from Lopez Flood Control Basin and Pacoima Wash; and uncontrolled flows from East Canyon. The Basin is experiencing a decline in groundwater levels. Concurrently, the Pacoima Spreading Grounds' ability to provide water recharge to the Basin is limited by its water storage capacity and its percolation rate. The facility's existing water storage capacity is 530 acre-feet (af). The existing percolation rate of 65 cubic feet per second (cfs) is currently limited due to relatively continuous clay-rich lenses with low permeability that underlie the recharge area. Also, the intake at the headworks located in the northeast portion of the site is limited to 600 cfs because higher flows can cause the intake canal to overtop and flood Arleta Avenue. The LACFCD has determined that the Project is needed to increase water conservation; to eliminate localized flooding; and to improve the efficiency of operations and maintenance.

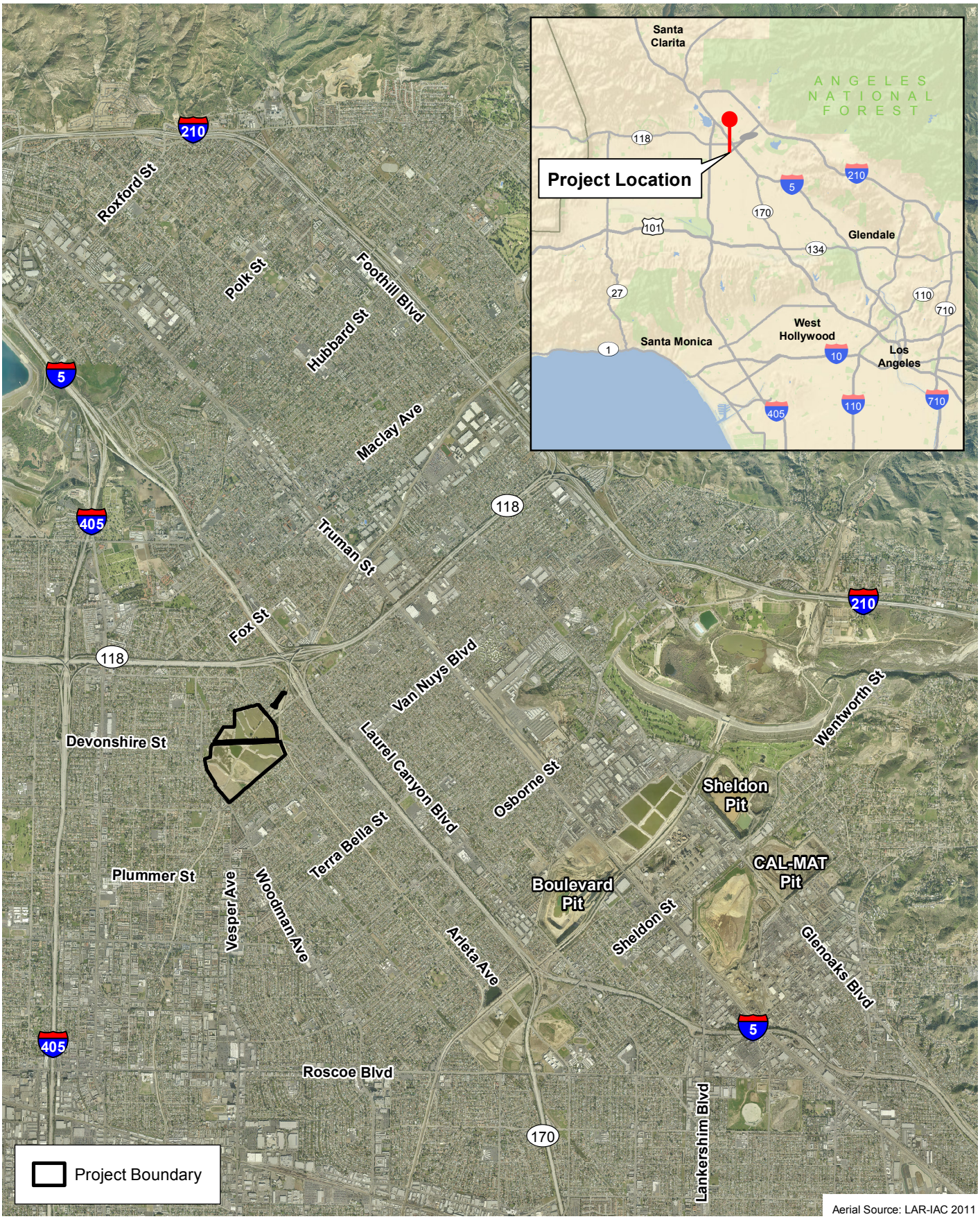

Aerial Source: LAR-IAC 2011

D:\Projects\COLADPW\J272\MXDs\MND\ex_RL_LV.mxd

Regional Location and Local Vicinity

Exhibit 2-1

Pacoima Spreading Grounds Improvement Project

N W E S

1 0.5 0 1 Miles

BonTerra PSOMAS

(Rev: 8-13-2015 JAZ) H:\Projects\CoLADPW (DPW)\J272\Graphics\MND\ex2-1_RL_LV.pdf

Aerial Source: LAR-IAC 2011

D:\Projects\COLADPW\J272\MXDs\MND\Ex_OnSiteAndSurroundingConditions_20160107.mxd

On-Site and Surrounding Conditions

Exhibit 2-2

Pacoima Spreading Grounds Improvement Project

N W E S

900 450 0 900 Feet

BonTerra PSOMAS

(Rev: 01-07-2016 LEW) R:\Projects\CoLADPW (DPW)\J272\Graphics\MND\Ex2-2_OnSiteAndSurroundingConditions_20160107.pdf

2.3 PROJECT SITE AND SURROUNDING AREA CHARACTERISTICS

2.3.1 LAND USES

The City of Los Angeles' General Plan land use designations for the site include Open Space and Public Facilities, and the zoning includes OS-1XL-O (Open Space) and PF-1XL-O (Public Facilities) (City of Los Angeles 2015b). There are existing Los Angeles Department of Water and Power (LADWP) (underground) and Southern California Edison (SCE) (aboveground) utility easements traversing the site (see Exhibit 2-3 below).

The Project site is situated in a densely developed, urban, and primarily single-family residential area. The Los Angeles community of Mission Hills is located generally to the northwest of the site, and the community of Arleta is located generally to the southeast (see Exhibit 2-2). Also, there are two parks, commercial land uses, and a church located near the site.

The Project site is irregularly shaped and is transected by public (City) roads. Specifically, the Pacoima Spreading Grounds is transected by Devonshire Street and by Arleta Avenue. The site is bound by residential land uses along the northern boundary, generally with the rear yards backing into the site; by Pacoima Wash or Arleta Avenue to the east; by Filmore Street to the south; and by Woodman Avenue, residential land uses, a church, or Devonwood Park to the west. Devonwood Park is located in the southeastern corner of the Devonshire Street and Woodman Avenue intersection, and abuts the Project site. The recently developed Devonshire Arleta Park is located in the northeastern corner of the intersection of Devonshire Street and Pacoima Wash, approximately 150 feet northeast of the site at the nearest points. The East San Fernando Valley Nature Parkway is a beautification project that was implemented by neighborhood groups in 2012 through the planting, and subsequent maintenance, of native plants in the median between the road and the bike lane running along the south side of Devonshire Street.

Topography and Geology

The Project site has elevations ranging from approximately 960 feet above mean sea level (msl) in the northeast portion of the site to approximately 910 feet above msl in the southwest portion, with an average elevation of approximately 935 feet above msl. The site is generally flat with a gentle slope towards the south-southwest.

The site is located in the portion of the Los Angeles Basin consisting of the sediments deposited by Pacoima Wash and Tujunga Wash. The sediments include sand, silt, gravel and clays that have formed during the weathering of surrounding mountains. Alluvium predominantly containing sand, silt, and gravel was observed during previous subsurface investigations at the site. The results of these investigations also identified a clay layer that appeared to dip south-southwest. The thickness of this clay layer was reported to vary from 3 feet to 10 feet. The depth to the top of the clay layer was observed to range from 5 to 15 feet below ground surface (bgs) (Geosyntec 2015).

Biological Resources

There are four vegetation communities on the Project site: Ruderal, Developed, Disturbed, and Ornamental Landscaping. The majority of the site is comprised of Ruderal vegetation communities, which are dominated by non-native, weedy species that are adapted to frequent disturbances. Species observed in this community on the site include common knotweed (*Polygonum arenastrum*), English plantain (*Plantago lanceolata*), and white sweetclover (*Melilotus alba*). Developed areas are those that have been altered by humans and display man-made structures; Developed areas found within the Project site include paved and graded roads.

Disturbed areas are often barren and lack vegetation due to clearing or grading, and are often dominated by pioneer herbaceous species that readily colonize disturbed ground. Species observed on the site in this community include wild lettuce (*Lactuca virosa*), prickly sow-thistle (*Sonchus asper*), and common sow-thistle (*Sonchus oleraceus*). Ornamental Landscaping includes areas where the vegetation is dominated by non-native horticultural plants; species observed on the site in this community include non-native pine (*Pinus* sp.), eucalyptus (*Eucalyptus* sp.), and palm trees (*Washingtonia robusta*)(Chambers 2013a).

2.4 PROJECT DESCRIPTION

The Project would involve several improvements to the existing facilities, as discussed in Section 2.4.1 below, including replacing the intake canal with underground pipelines; deepening and combining the basins to remove the underlying clay layer and to increase basin capacity; and constructing new interbasin structures and a new overflow structure/outlet weir based on the new basin configuration. These improvements would increase the water holding capacity of the spreading grounds from 530 af to 1,197 af; would increase the percolation rate of the spreading basins from 65 cfs to 142 cfs; would eliminate localized flooding on Arleta Avenue; and would improve the efficiency of operations and maintenance. It is estimated the Project would result in an additional 10,500 af per year of water conservation in a wet year. The Project components are depicted on Exhibit 2-3, Existing Facilities and Work Description; Exhibit 2-4, Proposed Site Plan; Exhibit 2-5; Intake Canal Detail; and Exhibit 2-6, Outlet Weir Detail.

2.4.1 PROJECT COMPONENTS

Intake Canal Replacement

The existing open, earthen-bottom and concrete-sided intake canal would be demolished and replaced with four (two pairs) 54-inch-diameter reinforced concrete pipes (RCPs) that would connect to the four existing 54-inch-diameter RCPs and then the existing 8.5-foot-wide and 3-foot-tall reinforced concrete boxes (RCBs) that cross beneath Arleta Avenue and outfall in the spreading basins (see Exhibit 2-4). The new pipelines would be backfilled with approximately 28,000 cubic yards (cy) of sediment excavated from the spreading basins to the existing ground level in the headworks area and the ground surface would remain earthen. As shown on Exhibits 2-3 and 2-4, the intake canal replacement would also involve modification of the concrete diversion structure connecting the canal to Pacoima Wash and the removal of the two diversion structures at the south end of the existing open canal that direct diverted flows into either the east or west RCPs and under Arleta Avenue. As shown on Exhibit 2-4, installation of the new RCPs would require removing one, and possibly two, existing trees that lie directly in the pipeline alignment. These trees, and all trees on the Project site, are non-native ornamental species. There are additional mature trees along the LACFCD's western property line (Exhibit 2-5); these are not proposed to be removed. The improved intake design would accommodate 600 cfs even when high flows are present in Pacoima Diversion Channel and eliminate the potential for flooding onto Arleta Avenue.

Basin Reconfiguration and Interbasin Structures

The majority of the Project site is comprised of the spreading basins, identified as Basins 1 through 12 on Exhibit 2-3. Two of these basins (Basins 1 and 6) function as desilting basins. The improvements to the spreading basins include both deepening the basins and combining the basins so that they operate with a total of eight basins. With the basin reconfiguration, Basin 1 would become the East Settling Basin and Basin 6 would become to West Settling Basin. The remaining basins, generally located south of the SCE easement that traverses the site (Exhibits 2-3 and 2-4), would become Basins 1 through 6. The basin reconfiguration to fewer,

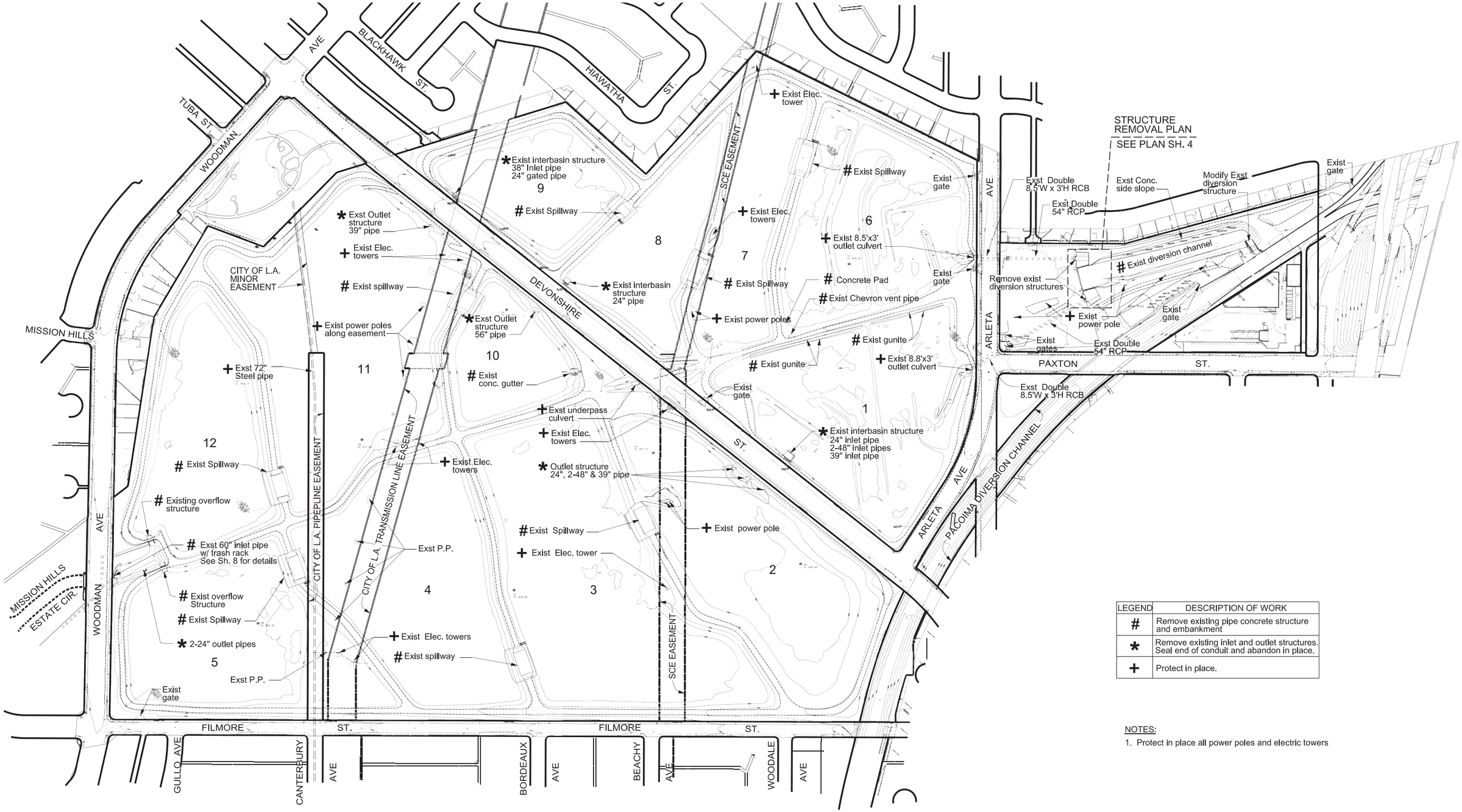

LEGEND	DESCRIPTION OF WORK
#	Remove existing pipe concrete structure and embankment
*	Remove existing inlet and outlet structures. Seal end of conduit and abandon in place.
+	Protect in place.

NOTES:

1. Protect in place all power poles and electric towers

Source: Los Angeles County Flood Control District 2015

Existing Facilities and Work Description

Exhibit 2-3

Pacoima Spreading Grounds Improvement Project

BonTerra PSOMAS

(08/11/2015 JAZ) H:\Projects\CoLADPW (DPW)\J272\Graphics\MND\ex2-3_ExistingFacilitiesAndWorkDescription.pdf

D:\Projects\COLADPW\J272\Graphics\MND\ex_ExistingFacilitiesAndWorkDescription.ai

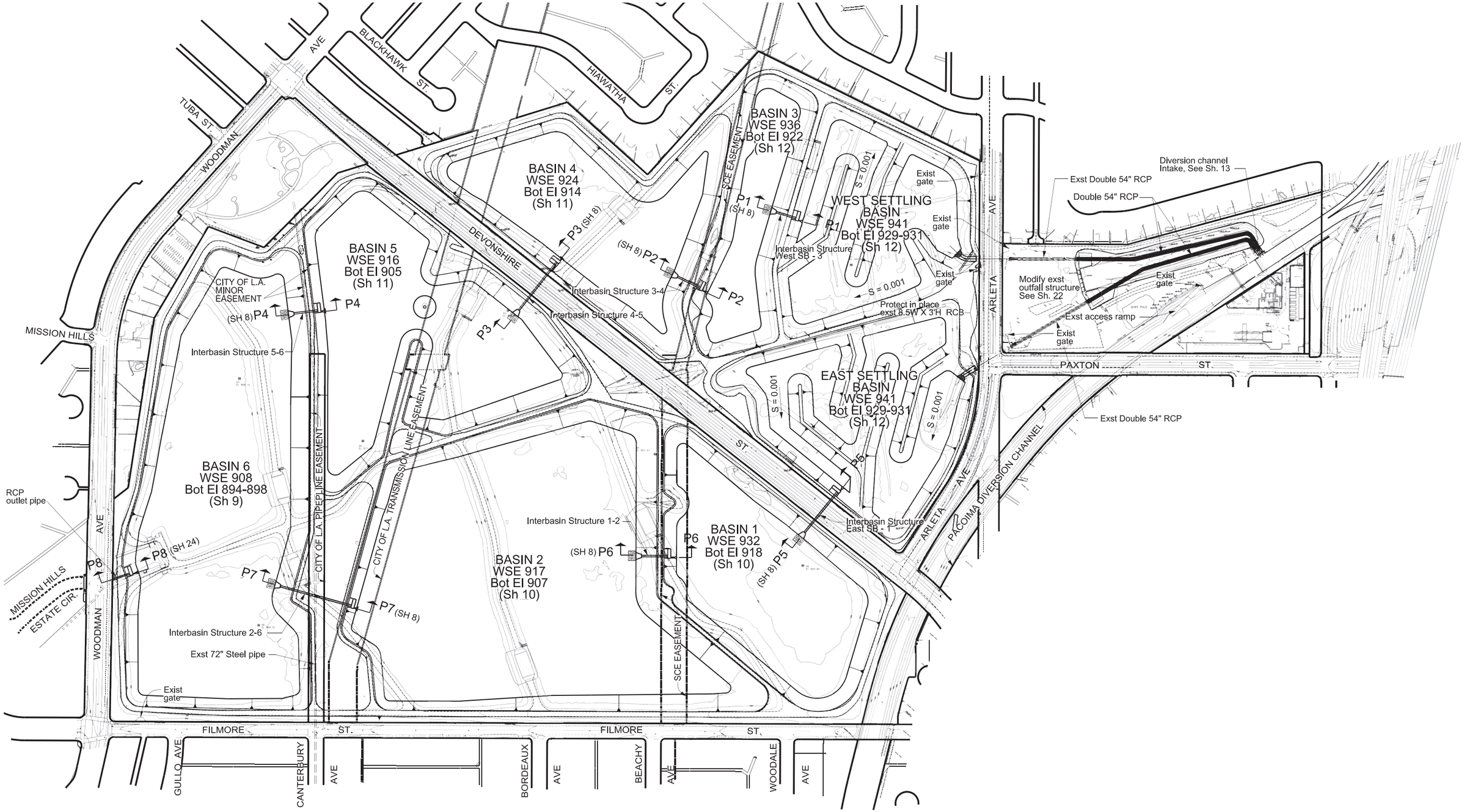

Source: Los Angeles County Flood Control District 2015

Proposed Site Plan

Exhibit 2-4

Pacoima Spreading Grounds Improvement Project

BonTerra PSOMAS

(08/11/2015 JAZ) H:\Projects\CoLADPW (DPW)\J272\Graphics\MND\ex2-4_ProposedSitePlan.pdf

D:\Projects\COLADPW\J272\Graphics\MND\ex_ProposedSitePlan.ai

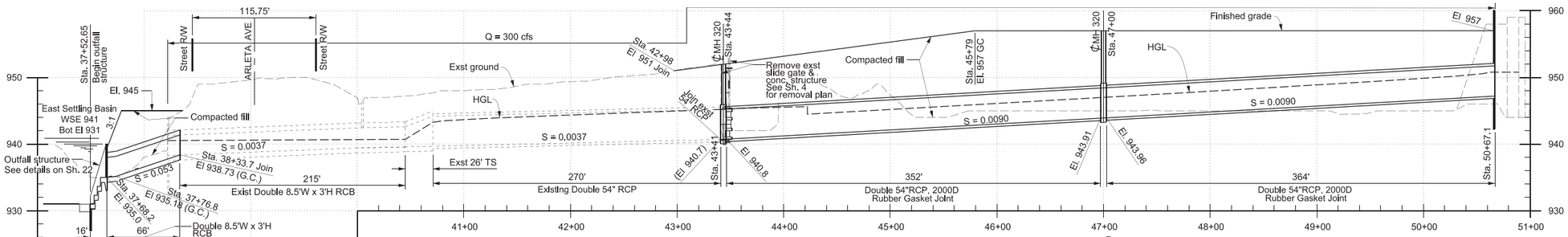

PROFILE P10-P10
EAST DOUBLE 54" RCP

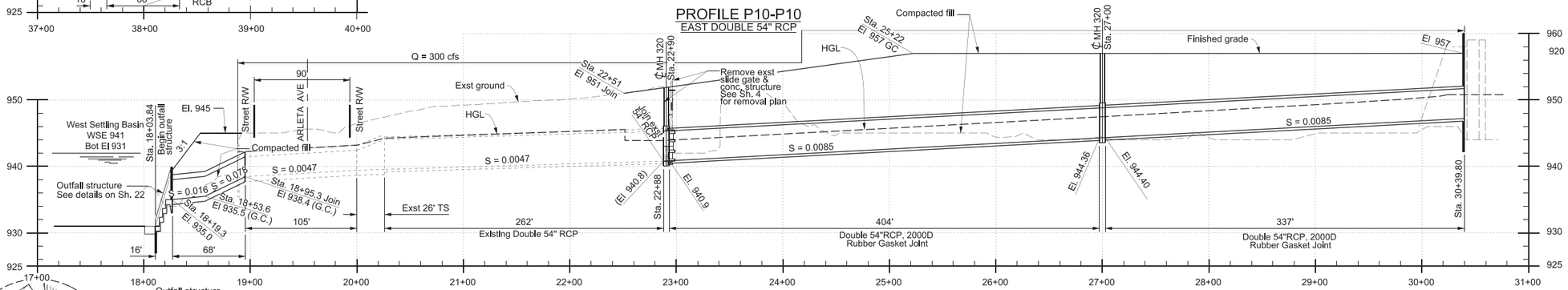

PROFILE P9-P9
WEST DOUBLE 54" RCP

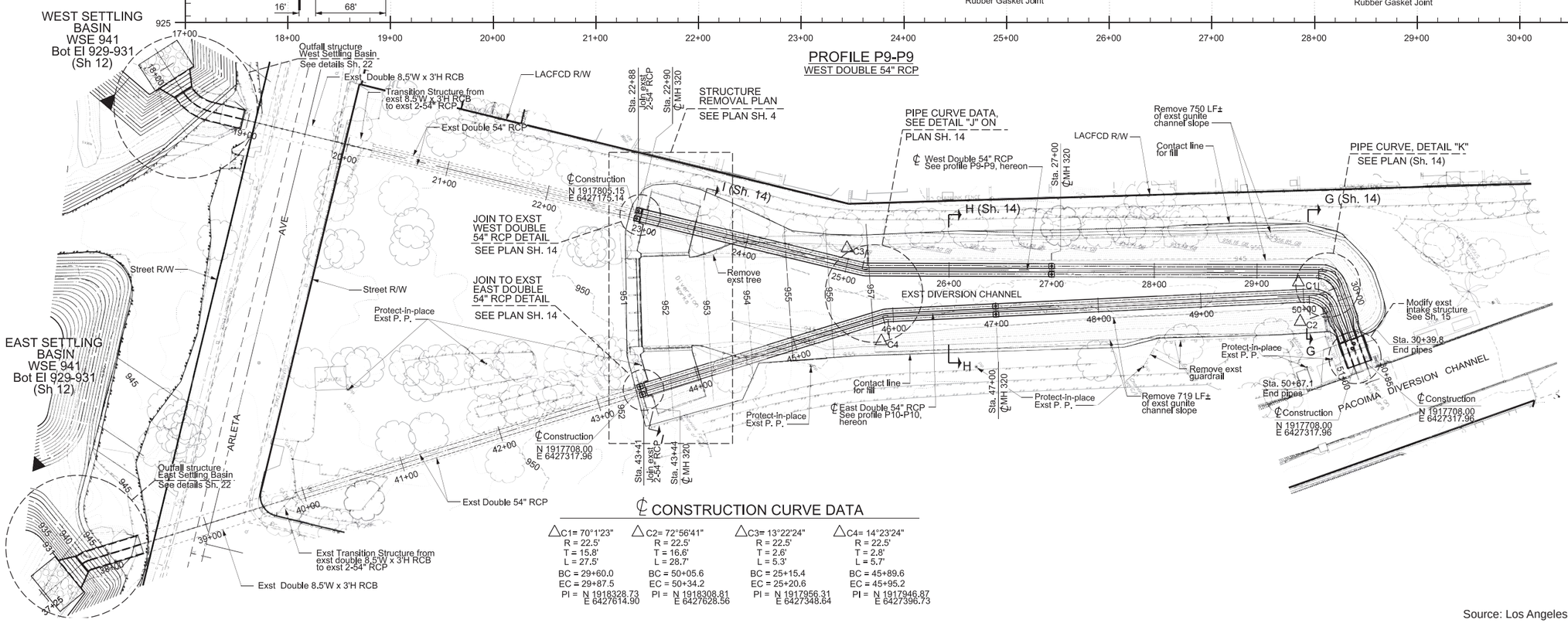

℄ CONSTRUCTION CURVE DATA

C1	C2	C3	C4
△ = 70°1'23"	△ = 72°56'41"	△ = 13°22'24"	△ = 14°23'24"
R = 22.5'	R = 22.5'	R = 22.5'	R = 22.5'
T = 15.8'	T = 16.6'	T = 2.6'	T = 2.8'
L = 27.5'	L = 28.7'	L = 5.3'	L = 5.7'
BC = 29+60.0	BC = 50+05.6	BC = 25+15.4	BC = 45+89.6
EC = 29+87.5	EC = 50+34.2	EC = 25+20.6	EC = 45+95.2
PI = N 1918328.73 E 6427614.90	PI = N 1918308.81 E 6427628.56	PI = N 1917956.31 E 6427348.64	PI = N 1917946.87 E 6427396.73

Source: Los Angeles County Flood Control District 2015

Intake Canal Detail

Exhibit 2-5

Pacoima Spreading Grounds Improvement Project

BonTerra PSOMAS

(08/11/2015 JAZ) H:\Projects\CoLADPW (DPW)\J272\Graphics\MND\ex2-5_IntakeCanalDetail.pdf

D:\Projects\COLADPW\J272\Graphics\MND\ex_IntakeCanalDetail.ai

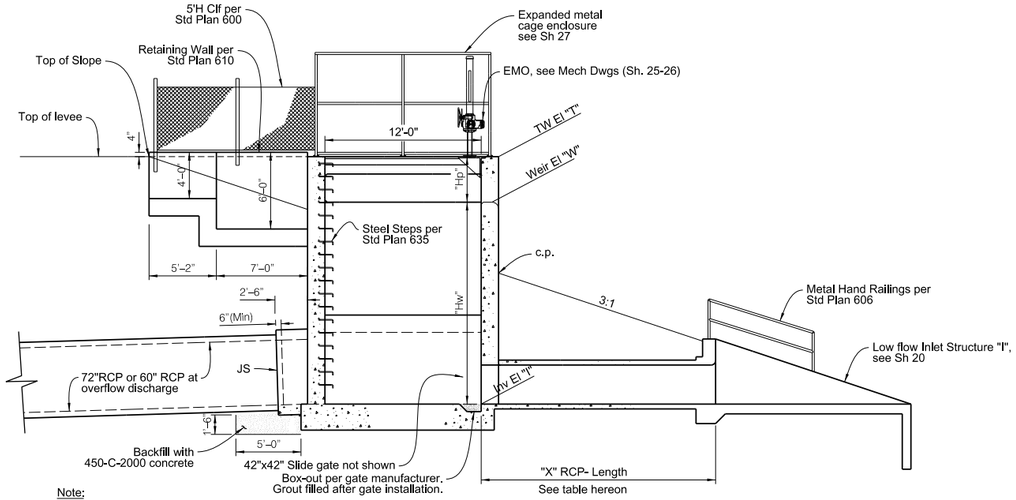

Note:
For structural reinforcement schedule, see Sh.18

SECTION D1-D1

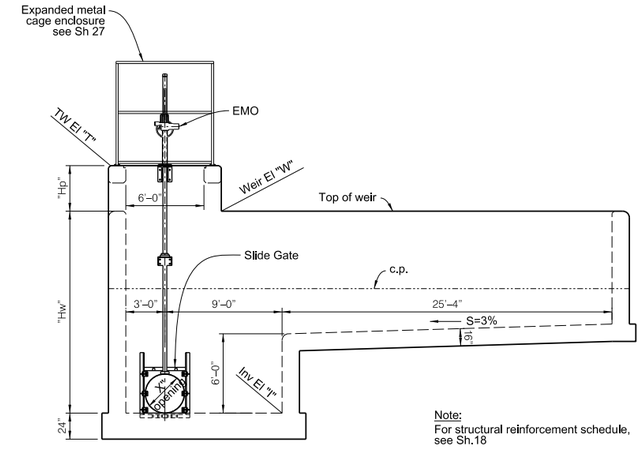

Note:
For structural reinforcement schedule, see Sh.18

SECTION D2-D2
FRONT WALL

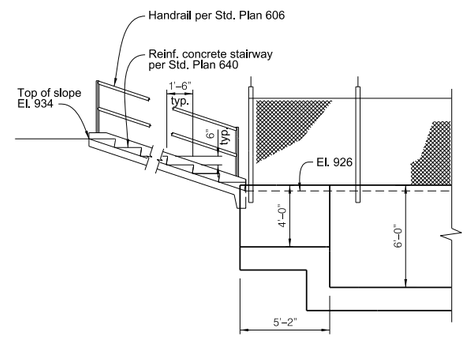

WEIR STRUCTURE 4-5
STAIRWAY DETAIL

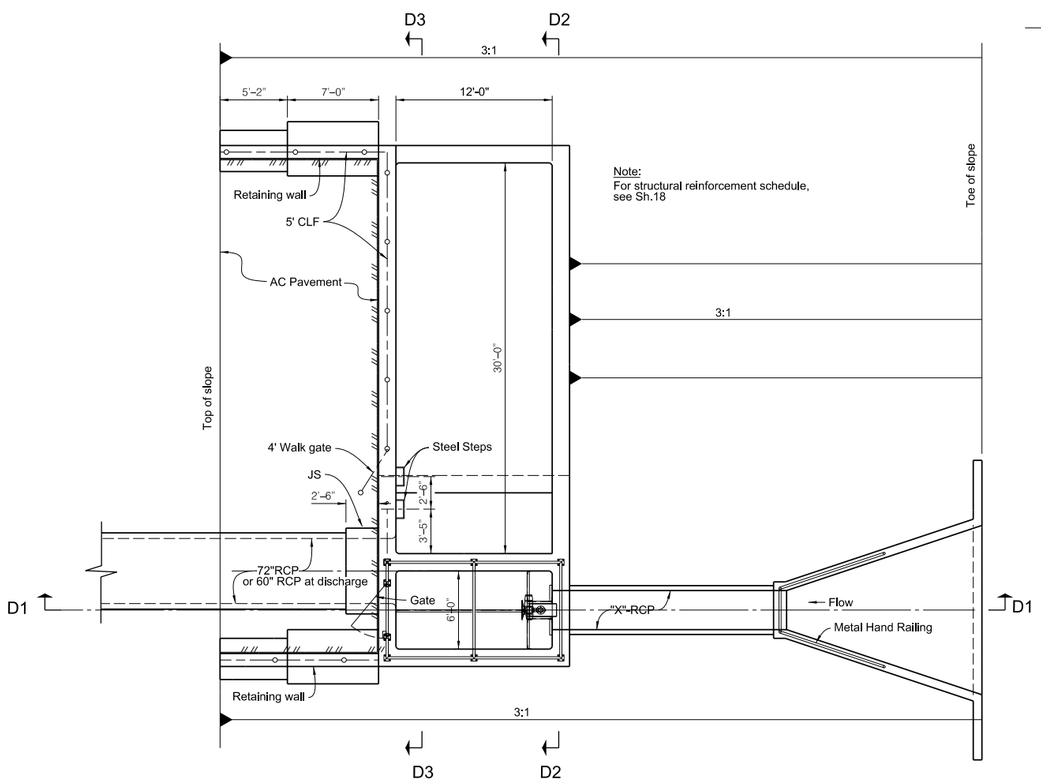

Note:
For structural reinforcement schedule, see Sh.18

PLAN
WEIR STRUCTURE (SH. 9 thru 12)

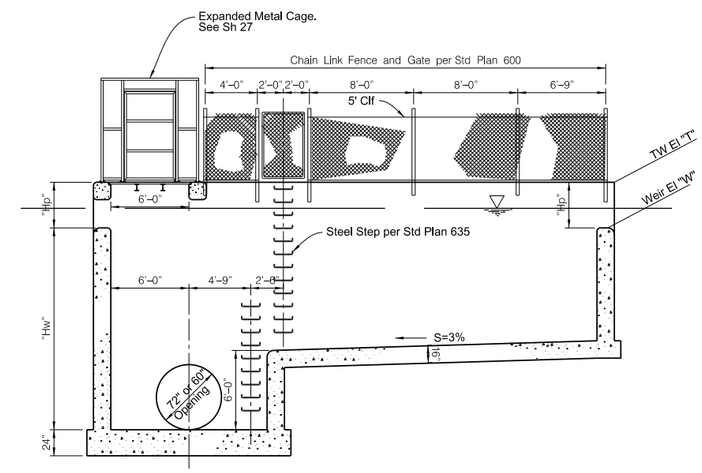

SECTION D3-D3
BACK WALL

Source: Los Angeles County Flood Control District 2015

Outlet Weir Detail

Exhibit 2-6

Pacoima Spreading Grounds Improvement Project

BonTerra PSOMAS

(08/11/2015 JAZ) H:\Projects\CoLADPW (DPW)\J272\Graphics\MND\ex2-6_OutletWeirDetail.pdf

D:\Projects\COLADPW\J272\Graphics\MND\ex_OutletWeirDetail.ai

larger basins contributes to a greater area available for groundwater recharge and a larger storage volume.

As shown in Exhibits 2-3 and 2-4, there are existing concrete spillways, inlet and outlet pipes, and culverts, which are collectively referred to as “interbasin structures” in this document. In addition, there is an existing concrete outlet weir located between Basins 5 and 12 and abutting Woodman Avenue, and there is gunite along between Basins 1 and 6. The existing spillways would be demolished and inlet/outlet pipes would either be (1) removed and recycled or (2) sealed and abandoned in place (Exhibit 2-3). For security, the new weir structure would be enclosed within five-foot-high chain-link fence, and the aboveground electrical and mechanical equipment would be enclosed within an expanded metal cage. A total of seven new interbasin structures would be constructed. The existing overflow structure and associated 60-inch-diameter inlet pipe with trash rack would be demolished and replaced with a new 72 inch RCPs with an elevation and placement based on the reconfigured basins. The new overflow structure would be the same structure as the interbasin structures, but with a new 60 RCP outlet. The typical interbasin structure and overflow structure design is illustrated on Exhibit 2-6. These concrete structures would not appear substantively different than the existing spillways, in so much as they would be isolated concrete structures among the earthen basins.

Sediment Disposal

The off-site export of approximately 1.37 million cy of sediment is expected to generate up to 240 round trips from 14-cy haul trucks or 180 round trips from 18-cy haul trucks per day. Excavated materials would be transported to one of the following Vulcan-owned sediment disposal sites: Cal Mat Pit, Boulevard Pit, and Sheldon Pit. These sites are all located in the Sun Valley area of Los Angeles, approximately 5.7 miles southeast of the Pacoima Spreading Grounds, and are shown on Exhibit 2-7, Proposed Sediment Haul Routes. The LACFCD has coordinated with Vulcan to ascertain that these facilities have the capability to accept and process this volume of sediment in the expected time frame, discussed under “Construction Scenario” below. Any sediment at the site which does not meet the requirements for disposal at Vulcan facilities would be taken to an alternative local disposal facility, such as Sunshine Canyon Landfill. Sediment deliveries to an alternative disposal site are anticipated to be sporadic and limited to small quantities. For the purposes of the analysis in this IS/MND, it was conservatively assumed that 100 percent of the sediment would be taken to the Vulcan disposal sites utilizing the two designated haul routes (A and B).

Based on the preliminary traffic analysis, two haul routes from the Pacoima Spreading Grounds site to the sediment disposal sites have been identified—Haul Route A (60 percent of trips) and Haul Route B (40 percent of trips). These haul routes are shown on Exhibit 2-7 and are described below. Portions of these routes overlap in two places: near the Project site and near the Vulcan pits.

Haul Route A would involve traveling east on Devonshire Street, north on Arleta Avenue, and northeast on Paxton Street to access I-5 southbound, taking the Sheldon Street exit, and either continuing north on Laurel Canyon Boulevard or turning right to head northeast on Sheldon Street to access either the Sheldon Pit or the Cal Mat Pit. By continuing north on Laurel Canyon Boulevard, trucks can turn east (right) on Branford Street to access the Boulevard Pit.

Haul Route B involves traveling east on Devonshire Street, north on Arleta Avenue, and northeast on Paxton Street, same as Haul Route A, but continuing on Paxton Street to access San Fernando Road. Heading south (right) on San Fernando Road, the trucks would either turn northeast (left) on Sheldon Street to access the Sheldon Pit or the Cal Mat Pit or turn southwest (right) on Sheldon Street and then head north (right) on Laurel Canyon Boulevard to turn east (right) on Branford

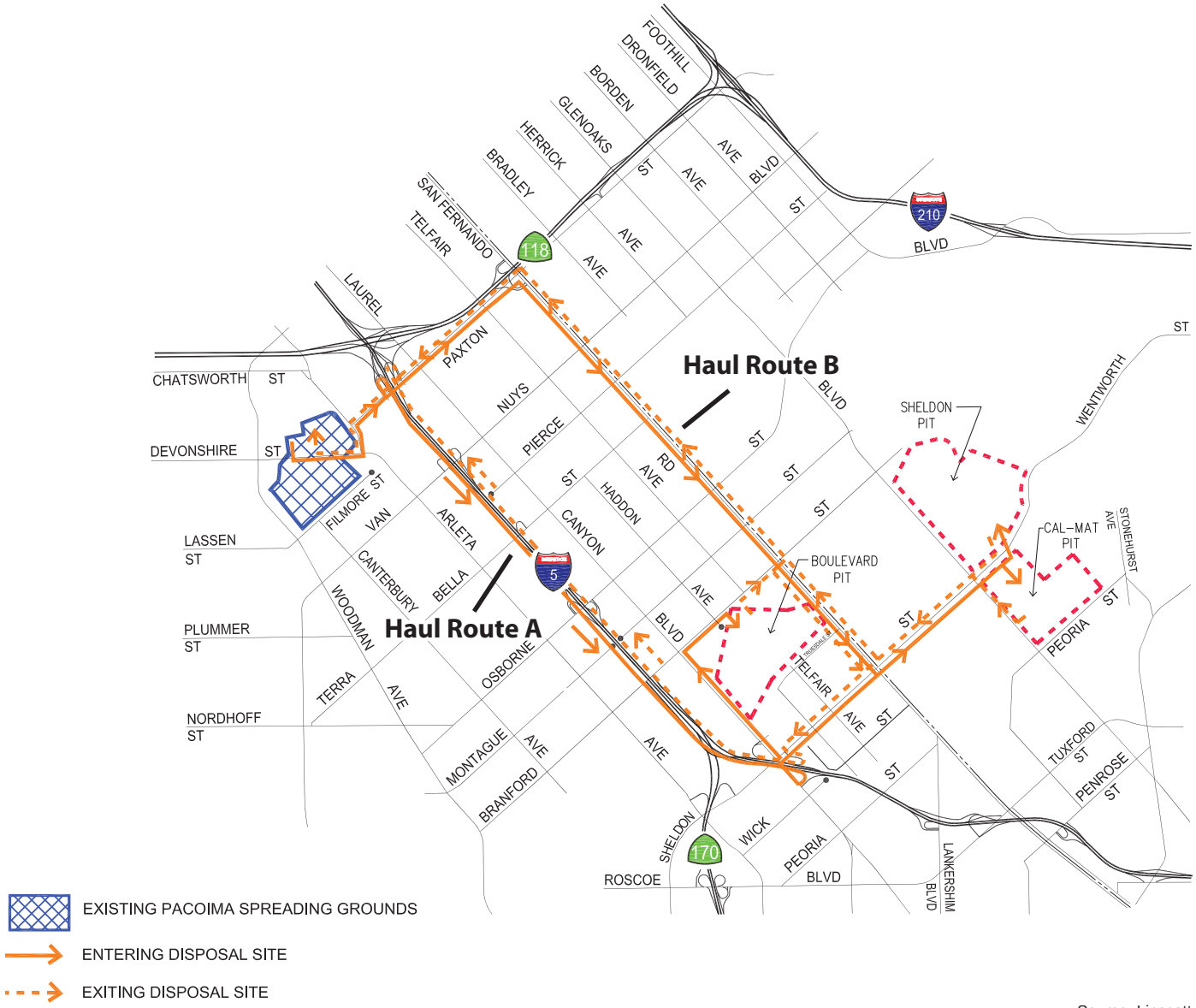

Source: Linscott, Law & Greenspan, Engineers 2015

Proposed Sediment Haul Routes

Exhibit 2-7

Pacoima Spreading Grounds Improvement Project

BonTerra PSOMAS

(08/13/2015 JAZ) H:\Projects\CoLADPW (DPW)\J272\Graphics\MND\ex2-7_ProposedSedimentHaulRoutes.pdf

D:\Projects\COLADPW\J272\Graphics\MND\ex_ProposedSedimentHaulRoutes.ai

Street to access the Boulevard Pit. Truck traffic from the proposed Project's sediment removal is expected to be distributed between the two haul routes.

To provide an analysis of all sediment disposal contingencies as they relate to haul truck traffic, the Traffic Impact Study prepared for the Project (Appendix F) assessed impacts for the following four scenarios:

- Alternative 1: Concurrent Use of All Three Sediment Disposal Sites
- Alternative 2: Use of Boulevard Pit Only
- Alternative 3: Use of Sheldon Pit Only
- Alternative 4: Use of Cal Mat Pit Only

It is noted these are not "alternatives" as defined in Section 15126.6 of the State CEQA Guidelines. Based on the Traffic Impact Study, it was determined that use of the Cal Mat Pit only would result in a significant intersection impact. Therefore, the County has committed to a mitigation measure (MM) that eliminates the possibility of using this site alone; sediment disposal at Cal Mat Pit would only be in combination with one or both of the other pits. Sediment hauling activities would be coordinated to reduce loading and unloading wait time for trucks.

Sensitive Receptors

The sensitive receptors near each portion of the Project site are detailed below, and the distance to each receptor is based on the distance from the proposed disturbed areas on the site to the nearest structure for homes and the church and the nearest use area for parks (Vista 2015a).

West Settling Basin

The proposed West Settling Basin is located on the northern side of the Project site and is bound by Arleta Avenue to the northeast. The nearby sensitive receptors consist of single-family homes located on the south side of San Jose Street as near as 40 feet north of the proposed improvements and single-family homes located on the northeast side of Arleta Avenue as near as 130 feet northeast of the proposed improvements to the West Settling Basin.

East Settling Basin

The proposed East Settling Basin is located on the eastern side of the Project site and is bound by Arleta Avenue to the northeast and Devonshire Street to the south. The nearby sensitive receptors consist of Devonshire Arleta Park, which is located as near as 220 feet east of the proposed improvements and single-family homes located on the east side of Pacoima Diversion Channel as near as 280 feet east of the proposed improvements to the East Settling Basin.

Individual Basins

The proposed Basin 1 is located on the eastern corner of the Project site and is bound by Devonshire Street to the north, Pacoima Diversion Channel to the east and Filmore Street to the southeast. The nearby sensitive receptors consist of Devonshire Arleta Park, which is located as near as 220 feet northeast of the proposed improvements; single-family homes located on the east side of Pacoima Diversion Channel as near as 170 feet east of the proposed improvements; and single- and multi-family homes located on the southeast side of Filmore Street as near as 125 feet southeast of the proposed improvements to Basin 1.

The proposed Basin 2 is located on the southeastern side of the Project site and is bound by Devonshire Street to the north and Filmore Street to the southeast. The nearby sensitive receptors consist of single-family homes located on the southeast side of Filmore Street as near as 120 feet southeast of the proposed improvements to Basin 2.

The proposed Basin 3 is located on the northern side of the Project site and is bound by the West Settling Basin to the east and the SCE Easement to the west. The nearby sensitive receptors consist of single-family homes located on the south side of San Jose Street as near as 70 feet north of the proposed improvements and single-family homes on the east side of Hiawatha Street as near as 70 feet west of the proposed improvements to Basin 3.

The proposed Basin 4 is located on the northwestern corner of the Project site and is bound by the SCE Easement to the east and Devonshire Street to the south. The nearby sensitive receptors consist of single-family homes located on the south side of Hiawatha Street as near as 50 feet north of the proposed improvements and single-family homes at the terminus of Blackhawk Street as near as 60 feet west of the proposed improvements to Basin 4.

The proposed Basin 5 is located on the western side of the Project site and is bound by Devonshire Street to the north and Devonwood Park to the west. The nearby sensitive receptors consist of Devonwood Park, located as near as 30 feet west of the proposed improvements, and single-family homes located on the north side of Devonshire Street as near as 135 feet north of the proposed improvements to Basin 5.

The proposed Basin 6 is located on the southwest corner of the Project site and is bound by Devonwood Park to the north, Woodman Avenue to the southwest, and Filmore Street to the southeast. The nearby sensitive receptors consist of Devonwood Park, located as near as 40 feet north of the proposed improvements; the New Apostolic Church located on the east side of Woodman Avenue as near as 30 feet west of the proposed improvements; and single-family homes located on the east side of Woodman Avenue as near as 30 feet west of the proposed improvements to Basin 6.

Diversion Channel Intake

The proposed diversion channel intake improvements are located on the northeast corner of the Project site and is bound by the Pacoima Diversion Channel to the east and Arleta Avenue to the southwest. The nearby sensitive receptors consist of single-family homes located on the east side of Minnehaha Street as near as 40 feet west of the proposed improvements to the diversion channel intake.

Haul Routes

The proposed haul routes would consist of the haul trucks traveling from the Project site on Paxton Street to either I-5 where they would exit at Sheldon Street or to stay on Paxton Street to San Fernando Avenue. Other streets that may be utilized by the haul trucks include Laurel Canyon Boulevard, Branford Street, and Glenoaks Boulevard.

The nearby sensitive receptors on Paxton Street consist of single- and multi-family homes that are located as near as 20 feet from the travel lanes; Ritchie Valens Park, which is located as close as 15 feet from the travel lanes; and Telfair Elementary School, which is located as near as 25 feet from the travel lanes of Paxton Street. The nearby sensitive receptors on San Fernando Road consist of single- and multi-family homes as near as 110 feet from the travel lanes and Pacifica Hospital of the Valley, which is located as near as 180 feet from the San Fernando Road travel lanes. The nearby sensitive receptors on Sheldon Street consist of single- and multi-family homes

as near as 20 feet from the travel lanes and Sun Valley High School, which is located as near as 25 feet from the Sheldon Street travel lanes. The nearby sensitive receptors on Laurel Canyon Boulevard consist of multi-family and mobile homes as near as 25 feet from the travel lanes and Fernangeles Recreation Center, which is located as near as 15 feet from the Laurel Canyon Boulevard travel lanes. The nearby sensitive receptors on Branford Street consist of single- and multi-family homes as near as 25 feet from the Branford Street travel lanes. There are no sensitive receptors in the vicinity of Glenoaks Boulevard that would be utilized by the haul trucks for the Project.

2.4.2 CONSTRUCTION SCENARIO

The Project would be constructed in one phase lasting approximately 18 months, beginning in spring 2017. Construction activities would take place year-round and, as noted previously, the Pacoima Spreading Grounds would be off-line (i.e., not in use) for the duration including one wet season. Construction of the Project is estimated to generate approximately 18 worker trips per day. All construction equipment staging and parking would be on site. Although the City of Los Angeles permits construction activity from 7:00 AM to 9:00 PM Monday through Sunday, the LACFCD would plan to implement the Project using 8-hour days within the 12-hour period between 7:00 AM and 7:00 PM on Monday through Friday and 8:00 AM to 5:00 PM on Saturday (i.e., 6 days a week) with no activity on Sunday.

2.5 PROJECT OPERATION AND MAINTENANCE

Once the Project is complete, there would be no long-term changes to the regular inspection and maintenance operations at the Pacoima Spreading Grounds.

2.6 ANTICIPATED PROJECT APPROVALS

This IS/MND is intended to serve as the primary environmental document pursuant to CEQA for actions associated with the Pacoima Spreading Grounds Improvement Project, including discretionary approvals required to implement the Project. In addition, this IS/MND is the primary reference document for the formulation and implementation of a mitigation monitoring and reporting program for the Project, in accordance with Section 15097 of the State CEQA Guidelines.

As the governing board of LACFCD, the Los Angeles County Board of Supervisors (Board), may adopt the IS/MND if it finds, on the basis of the whole Project record, that there is no substantial evidence that the Project would have a significant effect on the environment. Discretionary actions subject to County of Los Angeles Board of Supervisors review and approval include, but are not limited to:

- Adoption of the IS/MND
- Approval of the Pacoima Spreading Grounds Improvement Project

The IS/MND also provides environmental information to responsible agencies, trustee agencies, and other public agencies that may be required to grant approvals and permits or coordinate with the County of Los Angeles as part of Project implementation. These agencies include, but are not limited to, those listed below. Table 2-1, Other Agency Approvals and Requirements, lists all agencies with permit or other approval authority over the Project.

TABLE 2-1
OTHER AGENCY APPROVALS AND REQUIREMENTS

Agency	Approval Required
State Water Resources Control Board	Construction General Permit
City of Los Angeles Bureau of Engineering	Revocable Permit[1], Excavation Permit
[1]The City of Los Angeles issues a Revocable Permit to grant conditional encroachment of the public right-of-way.	

SECTION 3.0 ENVIRONMENTAL CHECKLIST FORM

This section includes the completed CEQA environmental checklist form, as provided in Appendix G of the State CEQA Guidelines, as well as substantiation and clarification for each checklist response. The checklist form is used to assist in evaluating the potential environmental impacts of the Pacoima Spreading Grounds Improvement Project and identifies whether the Project is expected to have potential significant impacts.

1. Project Title:	Pacoima Spreading Grounds Improvement Project
2. Lead Agency Name and Address:	Los Angeles County Flood Control District 900 South Fremont Avenue Alhambra, California 91803
3. Contact Person:	John Bodenchak Los Angeles County Flood Control District SpreadingGrounds@dpw.lacounty.gov
4. Project Location:	The Project site is the approximate 169-acre, County-owned Pacoima Spreading Grounds located at the intersection of Paxton Street and Arleta Avenue in the City of Los Angeles, Los Angeles County.
5. Project Sponsor's Name and Address:	Los Angeles County Flood Control District 900 South Fremont Avenue Alhambra, California 91803
6. General Plan Designation:	Open Space and Public Facilities
7. Zoning:	Open Space (OS-1XL-O) and Public Facilities (PF-1XL-O)

8. **Description of Project:** The Project would involve the deepening and reconfiguring of the existing spreading basins to the south of Arleta Avenue and the demolition and replacement of the existing concrete intake canal with four 54-inch-diameter reinforced concrete pipes to the north of Arleta Avenue. Implementation of the Project would increase the Pacoima Spreading Grounds' capacity from 530 acre-feet (af) to 1,197 af through removal of a clay layer present at depths of 12 to 24 feet. The Project would require excavation of approximately 1.6 million cubic yards (cy) of sediment, with an approximate export of 1.37 million cy to 3 nearby Vulcan-owned pits over the course of the estimated 18-month construction period.

9. **Surrounding land uses and setting:** The Project site is situated in a densely developed, urban, and primarily single-family residential area. The Los Angeles community of Mission Hills is located generally to the northwest of the site, and the community of Arleta is located generally to the southeast (see Exhibit 2-2). Also, there are open space (parks) uses, commercial uses, and a church located adjacent to the site.

10. **Other public agencies whose approval may be required:**

- State Water Resources Control Board (SWRCB)
- City of Los Angeles Bureau of Engineering

ENVIRONMENTAL FACTORS POTENTIALLY AFFECTED:

The environmental factors checked below would be potentially affected by this Project, involving at least one impact that is a "Less Than Significant with Mitigation", as indicated on the following pages.

- ☐ Aesthetics
- ☐ Air Quality
- ☒ Cultural Resources
- ☐ Greenhouse Gas Emissions
- ☐ Hydrology and Water Quality
- ☐ Mineral Resources
- ☐ Population and Housing
- ☐ Recreation
- ☐ Utilities and Service Systems
- ☐ Agriculture and Forest Resources
- ☒ Biological Resources
- ☐ Geology and Soils
- ☐ Hazards and Hazardous Materials
- ☐ Land Use and Planning
- ☒ Noise
- ☐ Public Services
- ☒ Transportation/Traffic
- ☒ Mandatory Findings of Significance

DETERMINATION:

On the basis of this initial evaluation:

☐ I find that the proposed project COULD NOT have a significant effect on the environment, and a NEGATIVE DECLARATION will be prepared.

☒ I find that although the proposed project could have a significant effect on the environment, there will not be a significant effect in this case because revisions in the project have been made by or agreed to by the project proponent. A MITIGATED NEGATIVE DECLARATION will be prepared.

☐ I find that the proposed project MAY have a significant effect on the environment, and an ENVIRONMENTAL IMPACT REPORT is required.

☐ I find that the proposed project MAY have a "potentially significant impact" or "potentially significant unless mitigated" impact on the environment, but at least one effect (1) has been adequately analyzed in an earlier document pursuant to applicable legal standards, and (2) has been addressed by mitigation measures based on the earlier analysis as described on attached sheets. An ENVIRONMENTAL IMPACT REPORT is required, but it must analyze only the effects that remain to be addressed.

☐ I find that although the proposed project could have a significant effect on the environment, because all potentially significant effects (a) have been analyzed adequately in an earlier EIR or NEGATIVE DECLARATION pursuant to applicable standards, and (b) have been avoided or mitigated pursuant to that earlier EIR or NEGATIVE DECLARATION, including revisions or mitigation measures that are imposed upon the proposed project, nothing further is required.

Patricia M. Wood
Signature of Lead Agency Representative

1/06/16
Date

Patricia M. Wood
Printed name

Los Angeles County Flood Control District
Agency

3.1 AESTHETICS	**Potentially Significant Impact**	**Less than Significant with Mitigation**	**Less than Significant Impact**	**No Impact**
Would the project:				
a) Have a substantial adverse effect on a scenic vista?	☐	☐	☐	☒
b) Substantially damage scenic resources, including, but not limited to, trees, rock outcroppings, and historic buildings within a state scenic highway?	☐	☐	☐	☒
c) Substantially degrade the existing visual character or quality of the site and its surroundings?	☐	☐	☒	☐
d) Create a new source of substantial light or glare which would adversely affect day or nighttime views in the area?	☐	☐	☒	☐

IMPACT ANALYSIS

Regulatory Requirements

None required.

Impact Discussion

a) Would the project have a substantial adverse effect on a scenic vista?

No Impact. The City of Los Angeles General Plan's Conservation Element defines scenic views or vistas as "the panoramic public view access to natural features, including views of the ocean, striking or unusual natural terrain, or unique urban or historic features. Public access to these views is from park lands, private and publicly owned sites and public rights-of-way" (City of Los Angeles 2001). The Project site is an existing, engineered flood control facility and is primarily surrounded by residential land uses. The site and surrounding area are generally flat; distant mountain views are available to the north and northeast. There are no ocean views, unusual terrain, or unique features, such as heritage or other unique trees, rock outcroppings, historic sites, or other landmarks on or near the site. Neither short-term construction nor long-term operation of the Project would reduce or otherwise alter distance mountain views. There would be no impact related to a scenic vista and no mitigation is required.

b) Would the project substantially damage scenic resources, including, but not limited to, trees, rock outcroppings, and historic buildings within a state scenic highway?

No Impact. The nearest designated or eligible State scenic highway is the segment of I-210 running northwest from its intersection with the I-710, and located approximately 4.5 miles to the northeast at the nearest point (Caltrans 2013). The Transportation Element of the City of Los Angeles General Plan also designates scenic highways; the nearest City-designated scenic highway is a segment of West Sepulveda Boulevard located approximately 1.25 miles west of the site (City of Los Angeles 1999a). The Project site would not be visible from I-210 or West Sepulveda Boulevard due to distance and intervening development. Therefore, there would be no impact related to views from a scenic highway, and no mitigation is required.

c) Would the project substantially degrade the existing visual character or quality of the site and its surroundings?

Less Than Significant Impact. Public views of the Project site are available primarily from adjoining roadways, including Arleta Avenue, Devonshire Street, Paxton Street, Filmore Street, and Woodman Avenue and from the adjacent Devonwood Park and Devonshire Arleta Park. The site is also visible from the private residences surrounding the Project site.

The visual character of the Project site would be altered by the presence of the construction equipment and activities for a period of approximately 18 months. Views of construction activities are common in dense urban areas such as the Project vicinity. Also, Project construction would be mobile (i.e., moving around the site) and it would not involve cranes or other high-profile or unusually large equipment. With Project implementation, the spreading basins would appear essentially the same as the existing condition, as no new facilities would be constructed that raise the profile or visual prominence of the facility. The headworks area would have a different visual character with the Project due to the removal of the concrete channel; replacement with underground pipelines; and creation of a new earthen surface. This change would generally be considered a positive effect due to the creation of an earthen (i.e., naturalized) surface. Therefore, the Project would not be considered to substantially degrade the visual character of the site or surroundings. There would be a less than significant impact and no mitigation is required.

d) Would the project create a new source of substantial light or glare which would adversely affect day or nighttime views in the area?

Less Than Significant Impact. Construction-related activities would not introduce new sources of light or glare to the Project site or the surrounding area. No construction activities are proposed during the nighttime hours beyond 7:00 PM, as the sun can set as early as 5:00 PM in the winter. The Project would include installation of floodlights at the interbasin structures. These lights would be used during nighttime storm operations. Also, each floodlight would be shielded and directed into the adjacent basin, and not towards surrounding land uses. The infrequent use of one or more floodlights, which would be shielded and directed away from surrounding receptors, would not be considered a new source of substantial light and glare. Therefore, there would be a less than significant impact and no mitigation is required.

MITIGATION MEASURES

There would be no significant impacts related to aesthetics; therefore, no mitigation measures are required.

3.2 AGRICULTURE AND FOREST RESOURCES	**Potentially Significant Impact**	**Less than Significant with Mitigation**	**Less than Significant Impact**	**No Impact**
Would the project:				
a) Convert Prime Farmland, Unique Farmland, or Farmland of Statewide Importance (Farmland), as shown on the maps prepared pursuant to the Farmland Mapping and Monitoring Program of the California Resources Agency, to non-agricultural use?	☐	☐	☐	☒
b) Conflict with existing zoning for agricultural use, or a Williamson Act contract?	☐	☐	☐	☒
c) Conflict with existing zoning for, or cause rezoning of, forest land (as defined in Public Resources Code section 12220[g]), timberland (as defined by Public Resources Code section 4526), or timberland zoned Timberland Production (as defined by Government Code section 51104[g])?	☐	☐	☐	☒
d) Result in the loss of forest land or conversion of forest land to non-forest use?	☐	☐	☐	☒
e) Involve other changes in the existing environment which, due to their location or nature, could result in conversion of Farmland, to non-agricultural use or conversion of forest land to non-forest use?	☐	☐	☐	☒

IMPACT ANALYSIS

Regulatory Requirements

None required.

Impact Discussion

a) Would the project convert Prime Farmland, Unique Farmland, or Farmland of Statewide Importance (Farmland), as shown on the maps prepared pursuant to the Farmland Mapping and Monitoring Program of the California Resources Agency, to non-agricultural use?

b) Would the project conflict with existing zoning for agricultural use, or a Williamson Act contract?

c) Would the project conflict with existing zoning for, or cause rezoning of, forest land (as defined in Public Resources Code, Section 12220[g]), timberland (as defined by Public Resources Code, Section 4526), or timberland zoned Timberland Production (as defined by Government Code, Section 51104[g])?

d) Would the project result in the loss of forest land or conversion of forest land to non-forest use?

e) Would the project involve other changes in the existing environment which, due to their location or nature, could result in conversion of Farmland to non-agricultural use or conversion of forest land to non-forest use?

No Impact. The Project site and surrounding area do not support any agricultural uses, forest lands, or timberland production activities. The City of Los Angeles land use designations for the site include Open Space and Public Facilities and the zoning includes OS-1XL-O (Open Space) and PF-1XL-O (Public Facilities) (City of Los Angeles 2015b). Review of maps by the California Department of Conservation Farmland Mapping and Monitoring Program shows that the site is not designated as Prime Farmland, Unique Farmland, or Farmland of Statewide Importance (FMMP 2015). Accordingly, there are no Williamson Act contracts applicable to the Project site.

Therefore, no conversion of farmland or forest land or conflict with agricultural or forest zoning would occur with the Project. Because the Project is not growth-inducing, it would not indirectly result in conversion of agriculture or forest lands. There would be no impact to agriculture and forest resources.

MITIGATION MEASURES

There would be no impacts to agriculture and forest resources; therefore, no mitigation measures are required.

3.3 AIR QUALITY	**Potentially Significant Impact**	**Less than Significant with Mitigation**	**Less than Significant Impact**	**No Impact**
Would the project:				
a) Conflict with or obstruct implementation of the applicable air quality plan?	☐	☐	☐	☒
b) Violate any air quality standard or contribute substantially to an existing or Projected air quality violation?	☐	☐	☒	☐
c) Result in a cumulatively considerable net increase of any criteria pollutant for which the Project region is in non-attainment under an applicable federal or state ambient air quality standard (including releasing emissions which exceed quantitative thresholds for ozone precursors)?	☐	☐	☒	☐
d) Expose sensitive receptors to substantial pollutant concentrations?	☐	☐	☒	☐
e) Create objectionable odors affecting a substantial number of people?	☐	☐	☒	☐

Information in this section is derived from the *Air Quality, Greenhouse Gas Emissions, and Health Risk Assessment Impact Analysis* (Air Quality Report) dated August 2015 and prepared by Vista Environmental (Vista 2015a). This report is provided in its entirety in Appendix A.

IMPACT ANALYSIS

Regulatory Setting

The Project site is located in the City of Los Angeles and within the Los Angeles County portion of the South Coast Air Basin (SoCAB). For air quality regulation and permitting, it is under the jurisdiction of the South Coast Air Quality Management District (SCAQMD). Both the U.S. Environmental Protection Agency (USEPA) and the State of California (State) have established health-based Ambient Air Quality Standards (AAQS) for air pollutants, which are known as “criteria pollutants”. The AAQS are designed to protect the health and welfare of the populace within a reasonable margin of safety. The federal and State AAQS are shown in Table 3-1.

TABLE 3-1
CALIFORNIA AND NATIONAL AMBIENT AIR QUALITY STANDARDS

Pollutant	Averaging Time	California Standards	Federal Standards	
			Primary[a]	Secondary[b]
O_3	1 Hour	0.09 ppm	–	–
	8 Hour	0.070 ppm	0.075 ppm	Same as Primary
PM10	24 Hour	50 µg/m^3	150 µg/m^3	Same as Primary
	Annual	20 µg/m^3	–	Same as Primary
PM2.5	24 Hour	–	35 µg/m^3	Same as Primary
	Annual	12 µg/m^3	12 µg/m^3	Same as Primary
CO	1 Hour	20 ppm	35 ppm	–
	8 Hour	9.0 ppm	9 ppm	–
NO_2	Annual	0.030 ppm	0.053 ppm	Same as Primary
	1 Hour	0.18 ppm	0.100 ppm	–
SO_2	24 Hour	0.04 ppm	–	–
	Annual	–	0.14 ppm	–
	1 Hour	0.25 ppm	75 ppb	–
Lead	30-day Avg.	1.5 µg/m^3	–	–
	3-month Rolling Avg.	–	0.15 µg/m^3	
Visibility Reducing Particles	8 Hour	Extinction coefficient of 0.23 per km – visibility ≥ 10 miles when relative humidity ≤ 70%	**No Federal Standards**	
Sulfates	24 Hour	25 µg/m^3		

O_3: ozone; ppm: parts per million; PM10: respirable particulate matter with a diameter of 10 microns or less; µg/m^3: micrograms per cubic meter; PM2.5: fine particulate matter with a diameter of 2.5 microns or less; CO: carbon monoxideNO_2: nitrogen dioxide; SO_2: sulfur dioxide; ppb: parts per billion; km: kilometer; –: No Standard.

[a] *National Primary Standards:* The levels of air quality necessary, within an adequate margin of safety, to protect the public health.
[b] *National Secondary Standards:* The levels of air quality necessary to protect the public welfare from any known or anticipated adverse effects of a pollutant.

Note: More detailed information in the data presented in this table can be found at the CARB website (www.arb.ca.gov).

Source: Vista 2015a (Appendix A).

Regional air quality is defined by whether the area has attained or not attained State and federal air quality standards, as determined by air quality data from various monitoring stations. Areas that are considered in “nonattainment” for federal standards must prepare and submit a State Implementation Plan (SIP) that demonstrates the means to bring the region into “attainment”. The SIP must integrate federal, State, and local components and regulations to identify specific measures to reduce pollution, using a combination of performance standards and market-based programs within the timeframe identified in the SIP. When an area has been reclassified from nonattainment to attainment for a federal standard, the status is identified as “maintenance”, and there must be a plan and measures established that will keep the region in attainment for the following ten years. Table 3-2 summarizes the attainment status of the SoCAB for the criteria pollutants.

TABLE 3-2
DESIGNATIONS OF CRITERIA POLLUTANTS IN THE SOUTH COAST AIR BASIN

Pollutant	State	Federal
O_3 (1-hour; State only)	Nonattainment	Extreme Nonattainment
O_3 (8-hour)		
PM10	Nonattainment	Attainment (Maintenance)
PM2.5	Nonattainment	Nonattainment
CO	Maintenance	Attainment (Maintenance)
NO_2	Attainment	Attainment (Maintenance)
SO_2	Attainment	Attainment
Lead	Attainment	Nonattainment (Partial)

O_3: ozone; PM10: respirable particulate matter with a diameter of 10 microns or less; PM2.5: fine particulate matter with a diameter of 2.5 microns or less; CO: carbon monoxide; NO_2: nitrogen dioxide; SO_2: sulfur dioxide.

Source: Vista 2015a (Appendix A).

Toxic Air Contaminants

Toxic air contaminant (TAC) is a term defined under the California Clean Air Act and consists of the same substances that are defined as Hazardous Air Pollutants (HAPs) in the Federal Clean Air Act. In order to determine the SoCAB-wide risks associated with major airborne carcinogens, the SCAQMD conducted the Multiple Air Toxics Exposure Study (MATES). According to the SCAQMD's MATES-III study, the northern portion of the Project site has an estimated cancer risk of 630 in 1 million and the southern portion of the Project site has an estimated cancer risk of 749 in one million. In comparison, the average cancer risk for the SCAQMD portion of Los Angeles County is 912 in one million. The primary sources of TACs in the study area are from diesel emissions from trucks operating on SR-170 and I-5.

In order to provide a perspective of risk, it is often estimated that the incidence in cancer over a lifetime for the U.S. population will affect 25 percent of all persons, or a risk of about 250,000 per million persons. The MATES-III study referenced a Harvard Report on Cancer Prevention, which estimated that, of cancers associated with known risk factors, about 30 percent were related to tobacco, about 30 percent were related to diet and obesity, and about 2 percent were associated with environmental pollution related exposures that includes hazardous air pollutants (i.e., TACs).

Sensitive Receptors

The sensitive receptors nearby each portion of the Project derived from the Air Report are detailed in Section 2.4.1, Project Components.

Regulatory Requirements

RR AQ-1 All construction activities shall be conducted in compliance with all applicable South Coast Air Quality Management District (SCAQMD) rules and permitting requirements, including:

- SCAQMD Rule 403, Fugitive Dust, for controlling fugitive dust and avoiding nuisance. Compliance with this rule will reduce short-term particulate pollutant emissions. Contractor compliance with Rule 403 requirements shall be mandated in the contractor's specifications.
- SCAQMD Rule 402, Nuisance, which states that a Project shall not "discharge from any source whatsoever such quantities of air contaminants or other material which cause injury, detriment, nuisance, or annoyance to any considerable number of persons or to the public, or which endanger the comfort, repose, health or safety of any such persons or the public, or which cause, or have a natural tendency to cause, injury or damage to business or property".

Impact Discussion

a) Would the project conflict with or obstruct implementation of the applicable air quality plan?

No Impact. The project is located in Los Angeles County, in the South Coast Air Basin (SoCAB), where the SCAQMD is the agency principally responsible for comprehensive air pollution control. A regional agency, the SCAQMD works directly with the Southern California Association of Governments (SCAG), County transportation commissions, and local governments and cooperates actively with all federal and State government agencies. The SCAQMD develops rules and regulations; establishes permitting requirements for stationary sources; inspects emissions sources; and enforces such measures through educational programs or fines, when necessary.

The SCAQMD is directly responsible for reducing emissions from stationary (area and point), mobile, and indirect sources. It has responded to this requirement by preparing a sequence of Air Quality Management Plans (AQMPs). An AQMP establishes a program of rules and regulations directed at attaining the National Ambient Air Quality Standards (NAAQS) and California Ambient Air Quality Standards (CAAQS). The regional plan applicable to the proposed Project is the SCAQMD's AQMP. The 2012 AQMP is the current Air Quality Management Plan.

The SCAQMD CEQA Handbook states that "New or amended GP Elements (including land use zoning and density amendments), Specific Plans, and significant projects must be analyzed for consistency with the AQMP". Strict consistency with all aspects of the plan is usually not required. A project should be considered to be consistent with the AQMP if it furthers one or more policies and does not obstruct other policies. The SCAQMD's CEQA Handbook identifies two key indicators of consistency, which are evaluated below:

(1) Whether the project will result in an increase in the frequency or severity of existing air quality violations or cause or contribute to new violations, or delay timely attainment of air quality standards or the interim emission reductions specified in the AQMP.

As shown in Threshold 3.3(b) below, short-term regional construction air emissions would not result in significant impacts based on SCAQMD thresholds of significance for regional, local, or TAC emissions. Operation of the Project would not generate any additional air pollutant emissions compared to the existing condition of maintenance activities.

(2) Whether the project will exceed the assumptions in the AQMP or increments based on the year of project buildout and phase.

The emphasis of this criterion is to ensure that the analyses conducted for the Project are based on the same forecasts as the AQMP. The *2012–2035 Regional Transportation/Sustainable Communities Strategy* prepared by SCAG consists of three sections: Core Chapters, Ancillary Chapters, and Bridge Chapters. The Growth Management, Regional Mobility, Air Quality, Water Quality, and Hazardous Waste Management chapters constitute the Core Chapters of the document. These chapters currently respond directly to federal and State requirements placed on SCAG. Local governments are required to use these as the basis of their plans for purposes of consistency with applicable regional plans under CEQA.

For this project, the City of Los Angeles Land Use Plan defines the assumptions that are represented in the AQMP. The Project would not change the current use as a spreading ground and is consistent with the current land use designation and zoning. Therefore, the Project would not exceed the AQMP assumptions for the Project site, based on applicable local and regional planning documents, and is found to be consistent with the AQMP for the second criterion. Therefore, no conflict with the 2012 AQMP would occur with the Project. There would be no impact and no mitigation is required.

b) Would the project violate any air quality standard or contribute substantially to an existing or projected air quality violation?

Less than Significant Impact. The SCAQMD establishes significance thresholds to assess the regional and local impact of Project-related air pollutant emissions in the SCAQMD. A project with emissions rates below these thresholds is considered to have a less than significant effect on air quality. In addition, a Health Risk Analysis (HRA) was prepared for the Project to determine the impact of the TAC emissions during construction. These analyses are summarized below.

Construction Impacts – Regional Air Quality

The SCAQMD has established methods to quantify air emissions associated with construction activities such as air pollutant emissions generated by operation of on-site construction equipment; fugitive dust emissions related to earthwork activities; and mobile (tailpipe) emissions from construction worker vehicles and haul/delivery truck trips. Emissions vary from day to day, depending on the level of activity; the specific type of construction activity occurring; and, for fugitive dust, prevailing weather conditions. Emissions were calculated using the California Emissions Estimator Model (CalEEMod) Version 2013.2.2 emissions inventory model. CalEEMod is a computer program published by the SCAQMD for estimating anticipated emissions associated with land development projects in California. CalEEMod has separate databases for specific counties and air districts, and the Los Angeles County database was used for the Project. It is noted that a construction initiation of spring 2016, rather than 2017, was assumed at the time the air quality modeling was prepared. Therefore, this analysis presents a similar or more conservative picture of worst-case construction emissions because the mix of construction equipment would be the same or would have newer equipment, and emissions factors (amount of pollutant per horsepower hour) for newer equipment would be the same or less than for the replaced equipment. Similarly, on-road vehicles for material hauling and worker commute may be newer and less polluting with a later start of construction.

A construction-period mass emissions inventory was compiled based on an estimate of construction equipment as well as daily schedule and activity assumptions, as detailed below. The mass emissions SCAQMD thresholds are based on the rate of emissions (i.e., pounds of pollutants emitted per day). Therefore, the quantity, duration, and the intensity of construction activities are important in assuring analysis of worst case (i.e., maximum daily emissions) scenarios.

The Project would be constructed in one phase lasting approximately 18 months. This analysis assumes that on-site equipment would consist of the simultaneous operation of two bulldozers, two excavators, one sediment shaker/sifter, three water trucks, and one street sweeper. The bulldozers, excavators, and sediment shaker were modeled as operating eight hours per day and the water trucks and street sweeper were modeled as operating four hours per day. Either a mounted impact hammer or hoe-ram would also be utilized during the demolition of the existing intake structure; however, the hoe-ram would most likely be mounted on an excavator that has been accounted for above, so no separate equipment was modelled for the hoe-ram.

The model assumes application of SCAQMD Rule 403, Fugitive Dust (RR AQ-1). Based on the Traffic Impact Study (TIS) prepared for the Project (Appendix F), the export of approximately 1.37 million cy of sediment would generate either 240 daily 14-cy haul truck trips or 180 daily 18-cy haul truck round trips and would generate approximately 18 worker trips per day based on a 6 days a week schedule. To account for the fugitive dust emissions that would occur from the segment of on-site dirt road travel, estimated to be an average $^{1}/_{8}$-mile of each haul truck trip by the LACFCD, the model was set to 97.8 percent paved roads with unpaved roads with a moisture content of 12 percent and a mean vehicle speed of 15 miles per hour. Finally, the Project would include the removal of approximately 614 cy of concrete from the removal of the existing intake canal that would generate a total of approximately 77 haul truck trips traveling 8 miles to Sunshine Canyon Landfill. As the most conservative scenario, these haul truck trips were modeled as occurring all in one day.

The maximum daily criteria pollutant emissions from Project construction with the use of either 14- or 18-cy haul trucks are shown in Table 3-3, Estimated Maximum Daily Construction Emissions. As shown, the maximum daily construction emissions would be below the SCAQMD thresholds. Therefore, a less than significant regional air quality impact would occur and no mitigation is required.

TABLE 3-3
ESTIMATED MAXIMUM DAILY CONSTRUCTION EMISSIONS
(LBS/DAY)

	VOC	NOx	CO	SOx	PM10	PM2.5
On-Site Equipment	5.71	59.97	40.93	0.06	8.31	5.31
Worker Trips	0.14	0.19	2.08	0.00	0.34	0.09
Demolition Haul Trucks	0.00	0.02	0.03	0.00	0.03	0.00
14-cy Haul Trucks	3.37	27.48	32.53	0.07	27.22	5.01
18-cy Haul Trucks	3.73	34.42	61.48	0.08	23.28	4.46
Total Emissions*	**9.58**	**94.60**	**104.52**	**0.14**	**35.90**	**10.49**
SCAQMD Thresholds	*75*	*100*	*550*	*150*	*150*	*55*
Exceeds Threshold?	**No**	**No**	**No**	**No**	**No**	**No**

lbs/day: pounds per day; VOC: volatile organic compound(s); NOx: nitrogen oxides; CO: carbon monoxide; SOx: sulfur oxides; PM10: respirable particulate matter with a diameter of 10 microns or less; PM2.5: fine particulate matter with a diameter of 2.5 microns or less; cy: cubic yards; SCAQMD: South Coast Air Quality Management District.

* Based on highest of either 14-cy or 18-cy haul truck emissions.

Source: Vista 2015a (Appendix A).

Construction Impacts – Localized Air Quality

The localized effects from the on-site portion of daily emissions were evaluated at sensitive receptor locations according to the SCAQMD's localized significance threshold (LST) method, which applies to the following criteria pollutants: nitrogen dioxide (NO_2), carbon dioxide (CO_2), respirable particulate matter with a diameter of 10 microns or less (PM10), and fine particulate matter with a diameter of 2.5 microns or less (PM2.5). The LST Method is a two-step process. To determine if any of these pollutants require a detailed analysis (i.e., dispersion modeling), each phase of construction was first screened using the SCAQMD's Mass Rate LST Look-Up Tables. The Look-Up Tables were developed by the SCAQMD in order to readily determine if the daily on-site emissions of CO, nitrogen oxides (NOx), PM10, and PM2.5 from a project could result in a significant impact to the local air quality.

Specifically, LSTs represent the maximum on-site emissions from a project that are not expected to cause or contribute to an exceedance of the most stringent applicable federal or State ambient air quality standard, and are developed based on the ambient concentrations of that pollutant for each source receptor area and distance to the nearest sensitive receptor. When quantifying mass emissions for localized analysis, only emissions that occur on site are considered. Consistent with the SCAQMD's LST guidelines, emissions related to off-site delivery/haul truck activity and employee trips are not considered in the evaluation of localized impacts.

The LST emission thresholds applied to the Project were calculated based on the East San Fernando Valley source receptor area and a disturbance of five acres, which is the largest acreage available in the Look-Up Tables. The nearest off-site sensitive receptors to the Project area located as near as 30 feet. In accordance with the LST Method, any receptor located closer than 25 meters (82 feet) shall be based on the 25-meter thresholds. The results of the LST analysis with the use of either 14-cy or 18-cy haul trucks are shown in Table 3-4, Screening of Maximum Localized Construction Emissions.

TABLE 3-4
SCREENING OF MAXIMUM LOCALIZED CONSTRUCTION EMISSIONS (LBS/DAY)

	NOx	CO	PM10	PM2.5
On-Site Construction Equipment	59.97	40.93	8.31	5.39
On-Site 14-cy Haul Trucks	0.60	0.71	0.60	0.11
On-Site Dirt Roads with 14-cy Trucks	0.00	0.00	24.17	3.80
On-Site 18-cy Haul Trucks	0.75	1.35	0.51	0.10
On-Site Dirt Roads with 18-cy Trucks	0.00	0.00	20.86	3.92
Total Emissions*	**60.72**	**42.28**	**33.08**	**9.41**
SCAQMD LSTs for Screening	*172*	*1,434*	*14*	*8*
Exceeds Threshold?	**No**	**No**	**Yes**	**Yes**

lbs/day: pounds per day; NOx: nitrogen oxides; CO: carbon monoxide; PM10: respirable particulate matter with a diameter of 10 microns or less; PM2.5: fine particulate matter with a diameter of 2.5 microns or less; cy: cubic yards; SCAQMD: South Coast Air Quality Management District; LST: Localized Significance Threshold

* Based on highest of either 14-cy or 18-cy haul truck emissions.

Source: Vista 2015a (Appendix A).

As shown, localized emissions for NOx and CO would not exceed their respective SCAQMD LSTs, and emissions of PM10 and PM2.5 would exceed the screening-level LSTs and therefore require detailed analysis in the form of dispersion modeling, discussed below. It is noted that exceedance of the screening threshold does not indicate a significant localized impact, but that additional dispersion modeling and analysis is required.

Fugitive Dust Dispersion Modeling

The 24-hour average concentrations of PM10 and PM2.5 at the nearby sensitive receptors were calculated using dispersion modeling, using the same model (AERMOD) and parameters as applied in the analysis of TACs detailed in Threshold 3.3(d) below, except the emission source was changed to an area source (rather than line or point source) that covered a majority of the Project site at 154 acres (623,862 square meters [m^2]).[1] Table 3-5, Local Fugitive Dust Concentrations, summarizes the calculated PM10 and PM2.5 levels at 11 sensitive receptor locations near the Project site.

[1] The area source for PM10 emissions was based on an emission rate of 5.567E-07 grams per second (g/s), which was calculated by converting the on-site PM10 emissions of 33.08 lbs/day (Table 3-4) to g/s over a 12-hour period and then dividing by 623,862 m^2. The area source for PM2.5 emissions was based on an emission rate of 2.242E-07 g/s, which was calculated by converting the on-site PM2.5 emissions of 13.32 lbs/day (Table 3-4) to g/s over a 12-hour period and then dividing by 623,862 m^2.

TABLE 3-5
LOCAL FUGITIVE DUST CONCENTRATIONS

Receptor ID	Receptor Description	Receptor Location[a]		24-Hour Concentrations ($\mu g/m^3$)	
		X	Y	PM10	PM2.5
1	SFR – NW of Intake Structure	367,030	3,792,240	2.24	0.90
2	SFR – N of Spreading Grounds	366,644	3,792,082	3.37	1.36
3	SFR – NW of Spreading Grounds	366,494	3,791,913	3.51	1.41
4	SFR – W of Spreading Grounds	366,294	3,791,729	3.51	1.41
5	Devonwood Park – W of Spreading Grounds	366,214	3,791,536	3.37	1.36
6	SFR – SW of Spreading Grounds	366,272	3,791,136	2.28	0.92
7	SFR – SE of Spreading Grounds	366,526	3,790,962	1.99	0.80
8	SFR – E of Spreading Grounds	367,107	3,791,450	3.62	1.46
9	SFR – E of Spreading Grounds	367,095	3,791,634	4.40	1.77
10	SFR – SE of Paxton St	367,081	3,791,995	3.07	1.24
11	MFR – SE of Paxton St	367,267	3,792,154	1.73	0.70
			Threshold of Significance[b]	10.4	10.4
			Exceeds Threshold?	**No**	**No**

$\mu g/m^3$: micrograms per cubic meter; PM10: respirable particulate matter with a diameter of 10 microns or less; PM2.5: fine particulate matter with a diameter of 2.5 microns or less; SFR: single-family residential; MFR: multi-family residential; NW: northwest; N: north; W: west; SW: southwest; SE: southeast; E: east.

[a] Based on World Geodetic System 1984 (WGS84), Universal Transverse Mercator (UTM).
[b] SCAQMD Thresholds of Significance (taken from http://www.aqmd.gov/docs/default-source/ceqa/handbook/scaqmd-air-quality-significance-thresholds.pdf?sfvrsn=2).

Source: Vista 2015a (Appendix A).

As shown in Table 3-5, the calculated local PM10 and PM2.5 concentrations at each nearby sensitive receptor would be below the SCAQMD's local threshold of significance of 10.4 micrograms per cubic meter ($\mu g/m^3$) during construction activities. Therefore, a less than significant local air quality impact would occur and no mitigation is required.

Operational Impacts – Regional and Localized Air Quality

The Pacoima Spreading Grounds currently requires periodic visits from LACFCD staff and results in air emissions from the vehicle transporting the workers to and from the site. Implementation of the Project would not result in additional site visits from LACFCD staff. Therefore, there would be no change in long-term, operational regional and local criteria pollutant emissions, as maintenance activities would be essentially the same as the existing condition. There would be no impact and no mitigation is required.

c) Would the project result in a cumulatively considerable net increase of any criteria pollutant for which the project region is in non-attainment under an applicable federal or state ambient air quality standard (including releasing emissions which exceed quantitative thresholds for ozone precursors)?

Less than Significant Impact. Cumulative projects include local development as well as general growth in the Project area. However, as with most development, the greatest source of emissions is from mobile sources (i.e., vehicles) that travel throughout the local area. Therefore, from an air quality standpoint, the cumulative analysis would extend beyond any local projects, and when

wind patterns are considered would cover an even larger area. Accordingly, the cumulative analysis for the Project's air quality must be generic by nature.

As discussed previously, the Project area is out of attainment for ozone (O_3), PM10 (State only), and PM2.5. In accordance with Section 15130(b) of the State CEQA Guidelines, the analysis incorporates a three-tiered approach to assess cumulative air quality impacts, each of which are addressed below:

(1) Consistency with the SCAQMD's project-specific thresholds;

(2) Project consistency with existing air quality plans; and

(3) Assessment of the cumulative health effects of the pollutants.

Consistency with the South Coast Air Quality Management District's Thresholds

The regional and local emissions of volatile organic compounds (VOC) and NOx (ozone precursors), PM10, and PM2.5 during construction of the Project are shown in Tables 3-3 through 3-5 above. As shown, the Project's emissions would be less than each pollutant's respective threshold. Therefore, construction of the Project would result in a less than significant cumulative impact for all criteria pollutants for which the SoCAB is out of attainment and no mitigation is required.

As discussed above, there would be no change in long-term emissions associated with Project operation; therefore, there would no cumulative impact and no mitigation is required.

Consistency with Air Quality Management Plans

As discussed above, the site is currently designated as Open Space and is also zoned Open Space (OS-1XL-O). The Project would not require a change to the land use planning for the site. As such, the Project is not anticipated to exceed the AQMP assumptions for the site and is found to be consistent with SCAQMD's 2012 AQMP. Therefore, there would be no cumulative impact and no mitigation is required.

Cumulative Health Impacts

The SoCAB is designated as nonattainment for O_3, PM10, and PM2.5, which means that the background levels of those pollutants are at times higher than the ambient air quality standards. The air quality standards were set to protect public health, including the health of sensitive individuals (elderly, children, and the sick). Therefore, when the concentrations of those pollutants exceeds the standard, it is likely that some sensitive individuals in the population would experience health effects. The analysis presented in Threshold 3.3(b) determined the Project would not exceed the SCAQMD regional significance thresholds for VOC and NOx (ozone precursors), PM10, and PM2.5. Therefore, the Project would result in a less than significant cumulative health impact and no mitigation is required.

d) Would the project expose sensitive receptors to substantial pollutant concentrations?

Less than Significant Impact. The majority of the estimated health risk from TACs can be attributed to relatively few compounds, the most important of which is diesel particulate matter (diesel PM). Diesel PM is a subset of PM2.5 because the size of diesel particles are typically 2.5 microns and smaller. The primary sources of TACs in the study area are from diesel emissions from trucks operating on SR-170 and I-5. Because implementation of the Project would involve

ongoing diesel equipment operations, an HRA was performed based on dispersion modeling of anticipated TAC emissions.

Health Risk Analysis Modeling Parameters

Important issues that affect the dispersion modeling of TAC emissions include the following: (1) Model Selection, (2) Source Treatment, (3) Meteorological Data, and (4) Receptor Grid, each of which is summarized below. Please refer to the Air Quality, Greenhouse Gas, and Health Risk Analysis in Appendix A for the complete description of all HRA modeling parameters.

Model Selection

The AERMOD View Version 8.9.0 Model was used for all dispersion modeling. Key dispersion modeling options selected include the regulatory default option and urban modeling option based on a population of 9,862,049 for Los Angeles County. For each analysis area, the AERMOD model was run twice, once for PM10 emissions and once for total organic gases (which includes VOC emissions) in order to calculate both the cancer and non-cancer acute and chronic health risks. The Project's TAC emissions were calculated for two separate geographical locations: (1) the area including the spreading basins and the truck route to I-5 and (2) the area from I-5 to the Sheldon and Cal-Mat Pits.

Source Treatment

Implementation of the Project would require the use of diesel powered off-road equipment as well as diesel powered haul trucks, whose emissions sources have been analyzed separately. All of the sources were modelled based on being operational between 7:00 AM and 7:00 PM, from Monday through Saturday. The construction activities would be limited to an 8-hour window within this time period; however, since the exact timing of construction activities is not known, the analysis of the 12-hour period provides for a worst-case analysis of the meteorological conditions over this entire timeframe.

The on-site diesel equipment was modeled as six point sources located around the perimeter of the Project site with total emission rates based on the CalEEMod results for the Project. As discussed, the export of sediment would generate either 240 daily 14-cy haul truck round trips or 180 daily 18-cy haul truck round trips, based on operating 6 days a week for 18 months. The on-site haul truck emissions have been analyzed separately for truck travel and truck idling. The location of the haul truck loading on the site would be constantly changing, and efforts would be made to limit the use of the perimeter road for truck loading. However, to provide a conservative analysis, half of the trucks were modeled as making a loop around the portion of the spreading basin located north of Devonshire Street and half were modeled as making a loop around the portion of the spreading basin located south of Devonshire Street. The on-site diesel truck travel was modeled by using two, line volume sources. The off-site diesel truck travel to the Sheldon and Cal-Mat Pits was also modeled as a single line volume source.

The truck travel on public roads was also modeled for the area of the spreading basins from the middle of the Project site on Devonshire Street to north on Arleta Avenue to north on Paxton Street to I-5. For the area from I-5 to the Sheldon and Cal-Mat Pits, the truck travel was modeled from I-5 off-ramp to Laurel Canyon Boulevard to north on Sheldon Street to the turn off for the Sheldon and Cal-Mat pits. This route was chosen since it was considered as a worst-case scenario, since it would place all of the haul trucks on the route that runs nearest to the sensitive receptors. In accordance with SCAQMD guidance, the truck travel on I-5 was not analyzed as the Project would make a negligible change in TAC emissions along I-5. Specifically, according to the California Department of Transportation's (Caltrans') *2013 Annual Average Daily Truck Traffic on*

the California State Highway System, I-5 at SR-118 has 21,291 daily trucks and the Project would represent 2.3 percent of the truck traffic on I-5.

Diesel truck idling was modeled as point sources. For the model run of the spreading basins, the truck idling was modeled based on two point sources with one placed in the central portion of the spreading basins located north of Devonshire Street and one placed in the central portion of the spreading basins located south of Devonshire Street. For the model run of the area near the pits, truck idling was also modeled based on two point sources, with one placed at the central portion of the Sheldon Pit and one placed at the central portion of the Cal-Mat Pit. The analysis was based on half of the 180 daily truck round trips idling for 7.5 minutes at each idling location.

Meteorological Data

Meteorological data from the SCAQMD's Burbank monitoring site was selected for this modeling application. Five full years (i.e., beginning of first year through end of fifth year) of sequential meteorological data was collected at the Burbank Station from 2008 to 2012 by the SCAQMD.

Receptor Grid

As discussed previously, the nearest off-site sensitive receptors to the spreading basins consist of multi-family homes as near as 35 feet to the southwest and single-family homes as near as 40 feet to the north and west of the proposed improvements to the spreading grounds, and Devonwood Park, which is as near as 30 feet west of the proposed improvements to the spreading grounds. Single-family homes are as near as 50 feet north of the intake canal improvements, and single-family and multi-family homes are as near as 25 feet from haul truck routes on the roads near the site. Discrete receptors (Receptors 1 through 11) were placed at the locations of the representative off-site residential structures and the park, and grid receptors were used out to 500 meters (1,640 feet). The locations of the sources and receptors near the Project site modeled in the AERMOD model is shown in Exhibit 3-1, Air Dispersion Model Source and Receptor Locations Near the Project Site.

The nearest sensitive receptors to the haul route from I-5 to the Sheldon and Cal Mat Pits consist of single-family and multi-family homes located as near as 20 feet from the travel lanes of Sheldon Street and 25 feet from the nearest structures at Sun Valley High School; Pacifica Hospital of the Valley, located as near as 180 feet from the San Fernando Road travel lanes; and Fernangeles Recreation Center located as near as 15 feet from the Laurel Canyon Boulevard travel lanes. Discrete receptors (Receptors 12 through 19) were placed at the locations of representative residential structures, at the high school, at the hospital, and at Fernangeles Recreation Center. The locations of the sources and receptors for the area near the pits, as modeled in the AERMOD model, are shown in Exhibit 3-2, Air Dispersion Model Source and Receptor Locations Near the Pits.

Health Risk Analysis Results

Health risks from TACs are twofold. First, TACs are carcinogens according to the State of California. Second, short-term acute and long-term chronic exposure to TACs can cause health effects to the respiratory system and other organs. Each of these health risks has been analyzed and is discussed below.

Cancer Risks

According to SCAQMD methodology, health effects from carcinogenic air toxics are usually described in terms of individual cancer risk. "Individual Cancer Risk" is the likelihood that a person

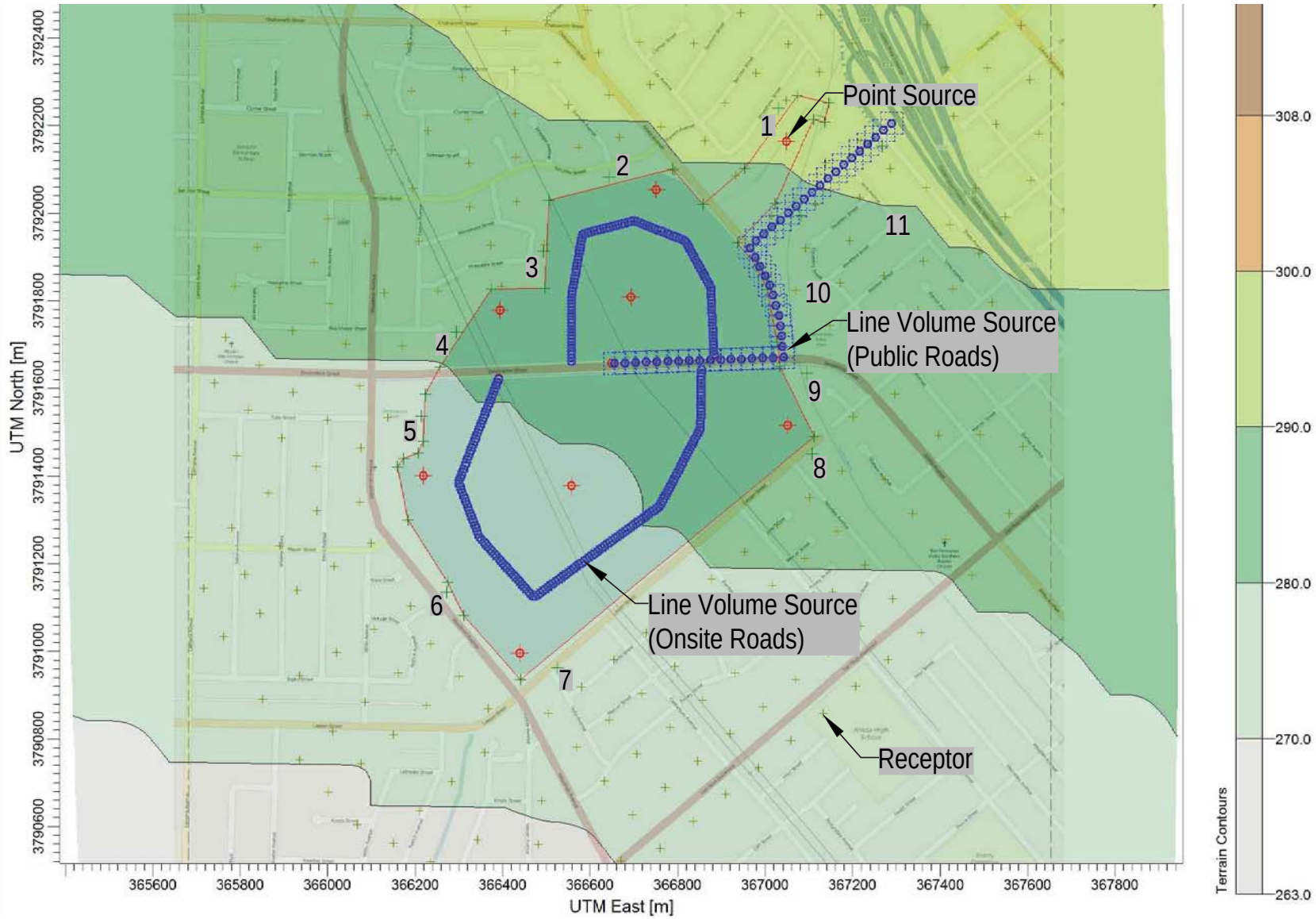

Source: Vista Enviromental 2015

Air Dispersion Model Source and Receptor Locations Near the Project Site

Exhibit 3-1

Pacoima Spreading Grounds Improvement Project

N
W E
S

BonTerra PSOMAS

(08/11/2015 JAZ) H:\Projects\CoLADPW (DPW)\J272\Graphics\MND\ex3-1_AirDispersionModelSourceAndReceptorLocationsNearTheProjectSite.pdf

D:\Projects\COLADPW\J272\Graphics\MND\ex_AirDispersionModelSourceAndReceptorLocationsNearTheProjectSite.ai

Source: Vista Enviromental 2015

Air Dispersion Model Source and Receptor Locations Near the Pits

Exhibit 3-2

Pacoima Spreading Grounds Improvement Project

N
W E
S

BonTerra PSOMAS

(08/11/2015 JAZ) H:\Projects\CoLADPW (DPW)\J272\Graphics\MND\ex3-2_AirDispersionModelSourceAndReceptorLocationsNearThePits.pdf

D:\Projects\COLADPW\J272\Graphics\MND\ex_AirDispersionModelSourceAndReceptorLocationsNearThePits.ai

exposed to TAC concentrations over a 70-year lifetime will contract cancer, based on the use of standard risk-assessment method. As shown in Table 3-6, Diesel Particulate Matter Concentrations at Receptors and Cancer Risk, all calculated cancer risks from TAC emissions were found to be well below the 10.0 in 1 million cancer risk threshold, with ranges from 0.0 to 0.9 people per million.

TABLE 3-6
DIESEL PARTICULATE MATTER CONCENTRATIONS AT RECEPTORS AND CANCER RISK

Receptor ID	Receptor Description	Receptor Location*		Annual Diesel PM Concentration ($\mu g/m^3$)	Cancer Risk Per Million People
		X	Y		
Project Site Area					
1	SFR – NW of Intake Structure	367,030	3,792,240	2.24	0.90
2	SFR – N of Spreading Grounds	366,644	3,792,082	3.37	1.36
3	SFR – NW of Spreading Grounds	366,494	3,791,913	3.51	1.41
4	SFR – W of Spreading Grounds	366,294	3,791,729	3.51	1.41
5	Devonwood Park – W of Spreading Grounds	366,214	3,791,536	3.37	1.36
6	SFR – SW of Spreading Grounds	366,272	3,791,136	2.28	0.92
7	SFR – SE of Spreading Grounds	366,526	3,790,962	1.99	0.80
8	SFR – E of Spreading Grounds	367,107	3,791,450	3.62	1.46
9	SFR – E of Spreading Grounds	367,095	3,791,634	4.40	1.77
10	SFR – SE of Paxton Street	367,081	3,791,995	3.07	1.24
11	MFR – SE of Paxton Street	367,267	3,792,154	1.73	0.70
Pits Area					
12	Pacifica Hospital of the Valley – W of San Fernando Rd	371,616	3,789,567	0.0001	0.0
13	MFR – SE of El Dorado Ave	371,489	3,789,404	0.0000	0.0
14	SFR – W of Tamarack Ave	371,383	3,789,358	0.0001	0.0
15	Sun Valley High School – SE of Cayuga Ave	371,258	3,789,220	0.0000	0.0
16	SFR – W of Oneida Ave	371,084	3,789,095	0.0000	0.0
17	SFR – SW of Haddon Ave	371,013	3,789,012	0.0000	0.0
18	SFR – NE of Rincon Ave	370,795	3,788,858	0.0000	0.0
19	Fernangeles Recreation Center – W of Laurel Canyon Blvd	370,889	3,788,529	0.0001	0.0
				Threshold of Significance	10.0
				Exceeds Threshold?	**No**

$\mu g/m^3$: micrograms per cubic meter; Diesel PM: diesel particulate matter; SFR: single-family residential; MFR: multi-family residential; NW; northwest; N: north; W: west; SW: southwest; SE: southeast; E: east.

* Based on World Geodetic System 1984 (WGS84), Universal Transverse Mercator (UTM).

Source: Vista 2015a (Appendix A).

Chronic Health Impacts

Chronic health effects are characterized by prolonged or repeated exposure to a TAC over many days, months, or years. Symptoms from chronic health impacts may not be immediately apparent and are often irreversible. This risk is measured with the Chronic Hazard Index, an expression of potential for non-cancer health effects; SCAQMD's significance threshold for chronic TAC exposure is a Hazard Index increase of one or more. Based on the highest annual concentration of diesel PM at the nearest sensitive receptor calculated by the AERMOD model, the Chronic Hazard Index for proposed on-site activities would be 0.027. This is well below the 1.0 threshold for a significant chronic health risk. Therefore, a less than significant non-cancer chronic health risk would result from implementation of the Project and no mitigation is required.

Acute Health Impacts

Acute health effects are characterized by sudden and severe exposure and rapid absorption of a TAC and, normally, a single, large exposure is involved. Acute health effects are often treatable and reversible. This risk is measured with the Acute Hazard Index, an expression of potential for non-cancer health effects; SCAQMD's significance threshold for acute TAC exposure is a Hazard Index increase of one or more. The Acute Hazard Index was calculated for each TAC pollutant from diesel emissions that has the potential to cause acute health risks, and the combined total Acute Health Index is 0.0107. This is well below the 1.0 threshold for a significant acute health risk. Therefore, a less than significant non-cancer acute health risk would result from implementation of the Project and no mitigation is required.

Operations-Related Sensitive Receptor Impacts

As discussed under Threshold 3.3(b), implementation of the Project would not result in additional site visits from LACFCD staff or other changes in long-term operations. Therefore, the continued operation of the Pacoima Spreading Grounds after Project implementation would not expose sensitive receptors in the site vicinity to substantial pollutant concentrations. There would be no impact and no mitigation is required.

e) Would the project create objectionable odors affecting a substantial number of people?

Less than Significant Impact. Individual responses to odors are highly variable and can result in a variety of effects. Generally, the impact of an odor results from a variety of factors such as frequency, duration, offensiveness, location, and sensory perception. The SCAQMD receives and investigates odor complaints from nearby residents to a project and, if six or more odor events are reported in a year, the SCAQMD will consider the odor impact a nuisance and has the authority to require the offender to implement measures to reduce the odor impacts. If the Project results in a violation of Rule 402 with regards to odor impacts, this would be considered a significant odor impact.

Construction-Related Odor Impacts

Potential sources that may emit odors during construction activities include the application of materials; emissions associated with the operation of diesel equipment; and possibly from disturbing decaying organic material during earth-moving activities. The diesel equipment utilized on site would be constantly moving around, and any odors created from diesel equipment would be temporary at any one location and would not likely be noticeable for extended periods of time beyond the Project site's boundaries. In addition, the application of materials such as asphalt pavement would be installed over a couple of days for any one location and would result in

temporary odor impacts that would not likely be noticeable for extended periods of time beyond the Project site's boundaries. The potential odor impacts associated with excavation activities would be caused by release of material that contain even small amounts of sulfur or organic material. Sulfur compounds have very low odor threshold levels. For instance, hydrogen sulfide can be detected by humans at concentrations from 0.5 parts per billion (ppb, which is noticeable by 2 percent of the population) to 40 ppb (which is qualified as annoying by 50 percent of the population). It should be noted that the Project site has been utilized as spreading grounds since the 1930s and vegetation has been removed from the spreading grounds on regular intervals for the entire duration of operations, so the amount of organic material in the soil should be minimal. Furthermore, soil in the Project vicinity is not known to contain high levels of sulfur so odor from sulfur in the accumulated soil is unlikely to occur. Therefore, there would be a less than significant impact related to odors during construction of the Project and no mitigation is required.

Operations-Related Odor Impacts

As discussed under Threshold 3.3(b), implementation of the Project would not result in additional site visits from LACFCD staff or other changes in long-term operations. Therefore, the continued operation of the Pacoima Spreading Grounds after Project implementation would not introduce any new sources of odors to the project site, nor would it reconfigure any existing sources of odors on the project site. There would be no impact and no mitigation is required.

MITIGATION MEASURES

There would be no significant impacts to air quality; therefore, no mitigation measures are required.

3.4 BIOLOGICAL RESOURCES	**Potentially Significant Impact**	**Less than Significant with Mitigation**	**Less than Significant Impact**	**No Impact**
Would the project:				
a) Have a substantial adverse effect, either directly or through habitat modification, on any species identified as a candidate, sensitive, or special status species in local or regional plans, policies, or regulations, or by the California Department of Fish and Game or U.S. Fish and Wildlife Service?	☐	☐	☐	☒
b) Have a substantial adverse effect on any riparian habitat or other sensitive natural community identified in local or regional plans, policies, regulations, or by the California Department of Fish and Game or U.S. Fish and Wildlife Service?	☐	☐	☐	☒
c) Have a substantial adverse effect on federally protected wetlands as defined by Section 404 of the Clean Water Act (including, but not limited to, marsh, vernal pool, coastal, etc.) through direct removal, filling, hydrological interruption, or other means?	☐	☐	☐	☒
d) Interfere substantially with the movement of any native resident or migratory fish or wildlife species or with established native resident or migratory wildlife corridors, or impede the use of native wildlife nursery sites?	☐	☒	☐	☐
e) Conflict with any local policies or ordinances protecting biological resources, such as a tree preservation policy or ordinance?	☐	☐	☐	☒
f) Conflict with the provisions of an adopted Habitat Conservation Plan, Natural Community Conservation Plan, or other approved local, regional, or state habitat conservation plan?	☐	☐	☐	☒

Information in this section is derived from the *Biological Technical Report for the Pacoima Spreading Grounds Improvement Project, Los Angeles County, California* (Biological Report) dated November 2013 and prepared by Chambers Group, Inc. (Chambers 2013a), and consultation with the LACFCD. This report is provided in its entirety in Appendix B.

IMPACT ANALYSIS

Regulatory Requirements

None required.

Impact Discussion

a) Would the project have a substantial adverse effect, either directly or through habitat modification, on any species identified as a candidate, sensitive, or special status species in local or regional plans, policies, or regulations, or by the California Department of Fish and Wildlife or U.S. Fish and Wildlife Service?

No Impact. The biological survey identified four vegetation communities on the Project site: Ruderal, Developed, Disturbed, and Ornamental Landscaping. Exhibit 3-3, Vegetation Types,

illustrates the distribution and acreage of vegetation types throughout the Project site. The majority of the site is comprised of Ruderal vegetation communities, which are dominated by non-native, weedy species that are adapted to frequent disturbances. Species observed in this community on the site include common knotweed, English plantain, and white sweetclover. Developed areas are those that have been altered by humans and display man-made structures; Developed areas found within the Project site include paved and graded roads. Disturbed areas are often barren and lack vegetation due to clearing or grading, and are often dominated by pioneer herbaceous species that readily colonize disturbed ground. Species observed on the site in this community include wild lettuce, prickly sow-thistle, and common sow-thistle. Ornamental Landscaping includes areas where the vegetation is dominated by non-native horticultural plants; species observed on the site in this community include non-native pine, eucalyptus, and palm trees.

Database searches resulted in a list of 17 federally and/or State-listed Threatened, Endangered, or Rare plant species documented to occur in the vicinity of the Project site. All 17 plant species were determined to be absent from the Project site. Factors used to determine the potential for occurrence included the quality of habitat, elevation, the location of prior California Natural Diversity Database (CNDDB) records of occurrence, and the results of the reconnaissance survey. A database search resulted in a list of 25 federally and/or State-listed Endangered or Threatened, Species of Concern, or otherwise sensitive wildlife species that may potentially occur on the Project site. Based on a literature review and the assessment of the various habitat types on the site, it was determined that all 25 sensitive wildlife species are considered absent from the site. No sensitive plant or wildlife species were observed on the Project site.

There is no potential for any Candidate, Sensitive, or Special Status plant or wildlife species to occur on the Project site. Therefore, there would be no impacts to special status species identified in local or regional plans, policies, or regulations; no mitigation is required.

b) Would the project have a substantial adverse effect on any riparian habitat or other sensitive natural community identified in local or regional plans, policies, regulations, or by the California Department of Fish and Game or U.S. Fish and Wildlife Service?

No Impact. As described above, no native vegetation types occur on the Project site. As a result, there are no riparian habitats or sensitive natural communities identified by regional plans, policies, regulations, or agencies on the Project site. There would be no impact and no mitigation is required.

c) Would the project have a substantial adverse effect on federally protected wetlands as defined by Section 404 of the Clean Water Act (including, but not limited to, marsh, vernal pool, coastal, etc.) through direct removal, filling, hydrological interruption, or other means?

No Impact. The LACFCD owns and operates numerous groundwater infiltration basins, which were designed to recharge underground aquifers with storm water, recycled water, and imported water. Each year the Pacoima Spreading Grounds recharges an average of 5,142 af of water, which is equivalent to the annual water needs of 12,900 single-family homes. The San Fernando Groundwater Basin represents a vital part of the drinking water portfolio in Los Angeles County, where many communities obtain the majority of their drinking water from underground aquifers. Per the Clean Water Rule published by the USEPA on June 29, 2015 (effective August 28, 2015), groundwater recharge basins are excluded from the definition of “waters of the United States” and are therefore not subject to federal jurisdiction under the Clean Water Act (USEPA and USACE 2015). There would be no impact to federally protected wetlands and no mitigation is required.

Source: Chambers Group 2013

Vegetation Types

Exhibit 3-3

Pacoima Spreading Grounds Improvement Project

480 240 0 480 Feet

BonTerra PSOMAS

(08/11/2015 JAZ) H:\Projects\CoLADPW (DPW)\J272\Graphics\MND\ex3-3_VegetationTypes.pdf

D:\Projects\COLADPW\J272\Graphics\MND\ex_VegetationTypes.ai

d) Would the project interfere substantially with the movement of any native resident or migratory fish or wildlife species or with established native resident or migratory wildlife corridors, or impede the use of native wildlife nursery sites?

Less than Significant Impact with Mitigation. The Project site is surrounded by urban development, and the area is not an established migratory wildlife corridor.

The federal Migratory Bird Treaty Act of 1918 (MBTA) protects the nests of all native bird species, including common species such as mourning dove (*Zenaida macroura*), Anna's hummingbird (*Calypte anna*), and house finch (*Carpodacus mexicanus*). Nesting birds and raptors have the potential to occur in natural and non-natural features within and adjacent to the Project site. In addition to the MBTA, Sections 3503 and 3503.5 of the *California Fish and Game Code* protect nesting migratory birds and raptors, and impacts to nesting birds, both on and adjacent to the Project site, would be considered a significant impact prior to mitigation.

As Project implementation necessitates that construction activities be initiated during the breeding season for nesting birds (March 1–September 15) and nesting raptors (January 1–July 31), MM BIO-1 requires a pre-construction nesting bird/raptor survey prior to construction to ensure compliance with the MBTA and describes the process for protecting any active nests identified while construction is ongoing. With implementation of MM BIO-1, potential impacts to nesting migratory birds and raptors during their breeding seasons would be reduced to a less than significant impact. If construction activities are initiated during the non-breeding season, implementation of MM BIO-1 would not be required, and there would be no potential impact to nesting birds and raptors.

e) Would the project conflict with any local policies or ordinances protecting biological resources, such as a tree preservation policy or ordinance?

No Impact. The Project does not involve the removal or trimming of any City of Los Angeles protected tree species, which includes oak trees (*Quercus* sp. excluding scrub oak), Southern California black walnut (*Juglans californica* var. *californica*), western sycamore (*Platanus racemosa*), and California bay (*Umbellularia californica*), as defined in Section 46.01 of the Municipal Code. The Biological Report prepared for the Project identified only non-native tree species on the site. There would be no impact and no mitigation is required.

f) Would the project conflict with the provisions of an adopted Habitat Conservation Plan, Natural Community Conservation Plan, or other approved local, regional, or state habitat conservation plan?

No Impact. There is no habitat conservation plan or natural community conservation plan for the Project area. Also, the Project site is not located within a designated Significant Ecological Area (SEA) under the County's SEA program (LACDRP 2015). There would be no impact and no mitigation is required.

MITIGATION MEASURES

MM BIO-1 The Project shall be conducted in compliance with the conditions set forth in the Migratory Bird Treaty Act (MBTA) and *California Fish and Game Code* with methods approved by the U.S. Fish and Wildlife Service (USFWS) and California Department of Fish and Wildlife (CDFW) to protect active bird/raptor nests. As the Project requires that work be initiated during the breeding season for nesting birds (March 1–September 15) and nesting raptors (January 1–July 31), a pre-construction survey for nesting birds and/or raptors shall be conducted by a

qualified Biologist within 3 days prior to any construction activities on the Project site and in the immediately surrounding area (i.e., within 50 feet for nesting birds and within 500 feet for nesting raptors). If the Biologist does not find any active nests in or immediately adjacent to the Project site, the construction work shall be allowed to proceed and no further mitigation is required.

If the Biologist finds an active nest in or immediately adjacent to the Project site and determines that the nest may be impacted or breeding activities substantially disrupted due to planned construction activities, the Biologist shall delineate an appropriate buffer zone around the nest depending on the sensitivity of the species and the nature of the construction activity. Any nest found during survey efforts shall be mapped on the construction plans. The active nest shall be protected until nesting activity has ended. To protect any nest site, the following restrictions to construction activities shall be required until nests are no longer active, as determined by a qualified Biologist: (1) construction limits shall be established within a buffer around any occupied nest (the buffer shall be 25–100 feet for nesting birds and 300–500 feet for nesting raptors), unless otherwise determined by a qualified Biologist and (2) access and surveying shall be restricted within the buffer of any occupied nest, unless otherwise determined by a qualified Biologist. Encroachment into the buffer area around a known nest shall only be allowed if the Biologist determines that the proposed activity would not disturb the nest occupants. Construction in a buffer area can proceed when the qualified Biologist has determined that fledglings have left the nest or the nest has failed.

3.5 CULTURAL RESOURCES	**Potentially Significant Impact**	**Less than Significant with Mitigation**	**Less than Significant Impact**	**No Impact**
Would the project:				
a) Cause a substantial adverse change in the significance of a historical resource as defined in Section 15064.5?	☐	☐	☒	☐
b) Cause a substantial adverse change in the significance of an archaeological resource pursuant to Section 15064.5?	☐	☐	☒	☐
c) Cause a substantial adverse change in the significance of a tribal cultural resource pursuant to Section 21074?	☐	☐	☒	☐
d) Directly or indirectly destroy a unique paleontological resource or site or unique geologic feature?	☐	☒	☐	☐
e) Disturb any human remains, including those interred outside of formal cemeteries?	☐	☐	☒	☐

Information in this section is derived from the *Cultural Resources Investigation for Pacoima Spreading Grounds Improvement Project, Los Angeles County, California* (Cultural Resources Report) dated November 2013 and prepared by Chambers Group (Chambers 2013b) and the *Phase I Paleontological Resources Assessment, Pacoima Spreading Grounds Improvement Project, Los Angeles, Los Angeles County, California* (Paleontology Report) dated July 2015 and prepared by BonTerra Psomas (BonTerra Psomas 2015). These reports are provided in their entirety in Appendices C-1 and C-2, respectively.

IMPACT ANALYSIS

Regulatory Requirements

RR CUL-1 Should archaeological resources be found during ground-disturbing activities for the Project, an Archaeologist shall be hired to first determine whether it is a "Tribal Cultural Resource" pursuant to Section 21074 of the *California Public Resources Code*, a "unique archaeological resource" pursuant to Section 21083.2(g) of the *California Public Resources* Code, or a "historical resource" pursuant to Section 15064.5(a) of the California Environmental Quality Act (CEQA) Guidelines. If the archaeological resource is determined to be a "Tribal Cultural Resource", "unique archaeological resource", or a "historical resource", the Archaeologist shall formulate a mitigation plan in consultation with the Los Angeles County Flood Control District that satisfies the requirements of the above-referenced sections. Upon approval of the mitigation plan by the Los Angeles County Director of Public Works, the Project shall be implemented in compliance with the mitigation plan. If the Archaeologist determines that the archaeological resource is not a "Tribal Cultural Resource", "unique archaeological resource", or "historical resource", s/he may record the site and submit the recordation form to the California Historic Resources Information System at the South Central Coastal Information Center at California State University, Fullerton.

RR CUL-2 If human remains are encountered during excavation activities, all work shall halt in the immediate vicinity of the discovery and the County Coroner shall be notified (*California Public Resources Code* §5097.98). The Coroner shall determine

whether the remains are of forensic interest. If the Coroner, with the aid of the Archaeologist approved by the Los Angeles County Flood Control District, determines that the remains are prehistoric, s/he will contact the Native American Heritage Commission (NAHC). The NAHC shall be responsible for designating the most likely descendant (MLD), who will be responsible for the ultimate disposition of the remains, as required by Section 7050.5 of the *California Health and Safety Code.* The MLD shall make his/her recommendation within 48 hours of being granted access to the site. The MLD's recommendation shall be followed if feasible, and may include scientific removal and non-destructive analysis of the human remains and any items associated with Native American burials (*California Health and Safety Code,* § 7050.5). If the landowner rejects the MLD's recommendations, the landowner shall rebury the remains with appropriate dignity on the property in a location that will not be subject to further subsurface disturbance (*California Public Resources Code* §5097.98).

Impact Discussion

a) Would the project cause a substantial adverse change in the significance of a historical resource as defined in Section 15064.5?

Less than Significant Impact. Construction of the Pacoima Spreading Grounds began in the early 1930s, and the first season of operation was 1932–1933. Based on the age of the facility, the Pacoima Spreading Grounds was evaluated for historic significance by Chambers as part of the Cultural Resources Report. Pacoima Spreading Grounds was concluded not to be eligible for the National Register of Historic Places (NRHP), California Register of Historic Resources (CRHR), or for consideration as an historical resources for purposes of CEQA due to the considerable alterations the facility has undergone since its construction. These alterations include deepening and reconfiguring the basins; improving the headworks and floodgates; and removing several levees and diversion structures. The evaluation concludes that the historic integrity of the property appears to have been undermined and the significant modifications that have taken place since the 1930s have affected the property's ability to convey a level of historical significance to warrant eligibility for listing to either the NRHP or CRHR. Therefore, impacts to historic resources would be less than significant and no mitigation is required.

b) Would the project cause a substantial adverse change in the significance of an archaeological resource pursuant to Section 15064.5?

c) Would the project cause a substantial adverse change in the significance of a tribal cultural resource pursuant to Section 21074?

Less than Significant Impact. The Cultural Resources Report did not identify any previously recorded prehistoric or historic archaeological sites or historic buildings and structures in the Project area or within a ½-mile radius of the study area. However, the absence of known cultural resources in the Project area does not preclude the possible presence of undiscovered cultural resources that may lie in the subsurface. The exposure of historic and archaeological resources during ground-disturbing activities is addressed by adherence to Section 21083.2(g) of the *California Public Resources Code* (RR CUL-1).

In addition, the Project is subject to Assembly Bill (AB) 52. "AB 52" (Statutes of 2014) is applicable to projects that have filed a Notice of Preparation (NOP) of an Environmental Impact Report (EIR), or notice of a Negative Declaration (ND) or Mitigated Negative Declaration (MND) on or after July 1, 2015. AB 52 requires lead agencies to initiate consultation with California Native American Tribes that are traditionally and culturally affiliated with the geographic area of the project and have requested such consultation prior to determining the type of CEQA documentation is

applicable to the project (i.e, EIR, ND, MND). AB 52 allows Tribes 30 days after receiving notification to request consultation. Because AB 52 places the burden of initiating consultation with lead agencies on the Tribes, but the law's provisions do not require the NAHC to provide lead agency information to Tribes until July 1, 2016. The LACFCD is initiating the offer of consultation with affected Tribes on this Project. Specifically, on October 6, 2015, the LACFCD sent letters to all Tribes that have requested notice, separate from AB52, of projects located in the Project area. On October 19, 2015, the Fernandeño Tataviam Band of Mission Indians accepted the offer of consultation pursuant to AB 52; an on-site meeting between the Tribe and LACFCD representatives was subsequently held in early November. AB 52 states that consultation ends with either: (1) an agreement is reached regarding avoidance of or mitigation measures to reduce a significant impact on a Tribal Cultural Resource or (2) a party concludes in good faith and after reasonable effort that mutual agreement cannot be reached. As of the circulation of this IS/MND, the consultation is ongoing, and will be completed in accordance with all AB52 requirements.

As of the circulation of this IS/MND, the consultation is ongoing, and will be completed in accordance with all AB 52 requirements. As stated in the Cultural Resources Investigation (Appendix C-1), no potentially significant impacts to archaeological resources, including impacts to tribal cultural resources, as defined by Public Resources Code Section 21074, have been identified. As such, no mitigation is proposed at this time. If additional measures are agreed to through the AB 52 consultation process, including the requirements in Public Resources Code 21084.3, those measures would be recorded in the Project's Mitigation Monitoring and Reporting Program (MMRP).

d) Would the project directly or indirectly destroy a unique paleontological resource or site or unique geologic feature?

Less than Significant with Mitigation. The Paleontological Resources Report did not identify any known paleontological resources in the Project area. However, based on the literature review and a records search from the Natural History Museum of Los Angeles (NHMLA) performed for the Paleontological Resources Report, there is a potential for paleontological resources to be present in the native sediments underlying the site.

The majority of the site is underlain by Quaternary gravel, and a narrow belt of Quaternary alluvium is present along the site's northern and southern boundaries. The literature indicates that in similar Late Pleistocene-aged sediments, remains of large extinct mammals were recovered as well as remains of extant smaller fish, amphibians, reptiles, birds, and mammals. The vertebrate fossil records of the NHMLA identify fossil localities from similar sediments within approximately ten miles of the site that included specimens of bison, mastodon, horse, mammoth, and camel. Dr. Sam McLeod of the NHMLA concludes that shallow excavations in the younger Quaternary Alluvium exposed throughout the Project site are unlikely to produce significant fossil vertebrate remains, but that deeper excavations that extend into older Quaternary deposits may encounter significant vertebrate fossils. The upper horizons of the Quaternary sediments are disturbed to a depth of approximately ten feet from past excavations on the Pacoima Spreading Grounds.

Therefore, MM CUL-1 requires that County staff (e.g., the County inspector(s), geologist(s) and the construction crew) be trained by a qualified Paleontologist to perform monitoring of excavations into native soils of approximately ten feet or deeper pursuant to the monitoring protocol establish by the Paleontologist. The monitoring protocol shall require that any discovered resources be reported to a qualified Paleontologist for evaluation, and, if the resource is determined to be significant, to determine the appropriate actions for further exploration and/or salvage of the resource. The County Monitor must be adequately trained by a qualified

Paleontologist in the recognition of paleontological resources. These and other requirements of MM CUL-1 would reduce the impact related to encountering unknown paleontological resources to a less than significant level.

e) Would the project disturb any human remains, including those interred outside of formal cemeteries?

Less than Significant Impact. There is no indication that human remains are present in the Project area, including those interred outside formal cemeteries. In the unlikely event of an unanticipated encounter with human remains in Project site, the *California Health and Safety Code* and the *California Public Resources Code* require that any activity in the area of a potential find be halted and the Los Angeles County Coroner be notified, as described in RR CUL-2. Compliance with RR CUL-2 would ensure that impacts would be less than significant.

MITIGATION MEASURES

MM CUL-1 Prior to the start of sediment removal, a qualified Paleontologist shall be present at the pre-grading conference to establish procedures for temporarily halting or redirecting work to permit the sampling, identification, and evaluation of newly discovered paleontological resources found during excavation activities. The paleontologist shall conduct a training for construction personnel and on-site County staff on the identification of possible paleontological resources that may be present in the area. A monitoring protocol shall be established to identify and salvage any paleontological resources that may be unearthed through excavation activities. Monitoring shall only be required for soil disturbance into native soils that have the potential for resources, which occur approximately ten feet or deeper below the surface soils. The County Monitors must be adequately trained by a qualified Paleontologist in the recognition of paleontological resources. Any discovered resources shall be reported to a qualified Paleontologist for evaluation. If the resource is found to be significant, the Paleontologist shall determine appropriate actions, in cooperation with the County, for further exploration and/or salvage. A Disposition of the Recovered Paleontological Resources and Mitigation Report shall be prepared by the qualified Paleontologist and submitted to the County. Any recovered fossils shall be deposited in an accredited institution or museum, such as the Natural History Museum of Los Angeles County.

3.6 GEOLOGY AND SOILS	**Potentially Significant Impact**	**Less than Significant with Mitigation**	**Less than Significant Impact**	**No Impact**
Would the project:				
a) Expose people or structures to potential substantial adverse effects, including the risk of loss, injury, or death involving:				
i) Rupture of a known earthquake fault, as delineated on the most recent Alquist-Priolo Earthquake Fault Zoning Map issued by the State Geologist for the area or based on other substantial evidence of a known fault? Refer to Division of Mines and Geology Special Publication 42.	☐	☐	☐	☒
ii) Strong seismic ground shaking?	☐	☐	☐	☒
iii) Seismic-related ground failure, including liquefaction?	☐	☐	☐	☒
iv) Landslides?	☐	☐	☐	☒
b) Result in substantial soil erosion or the loss of topsoil?	☐	☐	☒	☐
c) Be located on a geologic unit or soil that is unstable, or that would become unstable as a result of the Project, and potentially result in onsite or offsite landslide, lateral spreading, subsidence, liquefaction, or collapse?	☐	☐	☐	☒
d) Be located on expansive soil, as defined in Table 18-1-B of the Uniform Building Code (1994), creating substantial risks to life or property?	☐	☐	☒	☐
e) Have soils incapable of adequately supporting the use of septic tanks or alternative waste water disposal systems where sewers are not available for the disposal of waste water?	☐	☐	☐	☒

IMPACT ANALYSIS

Regulatory Requirements

RR HYD-1, provided in Section 3.9, Hydrology and Water Quality, is applicable to the analysis of topsoil loss below.

Impact Discussion

a) Would the project expose people or structures to potential substantial adverse effects, including the risk of loss, injury, or death involving:

i) Rupture of a known earthquake fault, as delineated on the most recent Alquist-Priolo Earthquake Fault Zoning Map issued by the State Geologist for the area or based on other substantial evidence of a known fault? Refer to Division of Mines and Geology Special Publication 42.

iii) Seismic-related ground failure, including liquefaction?

iv) Landslides?

No Impact. The Project site is not within an Alquist-Priolo Earthquake Fault Zone and there are no known faults traversing the site (CGS 1979; LACDPW 2009). Therefore, the risk of surface rupture at the Project site is considered remote.

According to the Seismic Hazard Zones Map for the San Fernando Quadrangle prepared by the California Geological Survey (CGS), the Project site is not identified as susceptible to liquefaction or landslides (CGS 1999). The site is relatively flat, sloping gently toward the south-southwest. The historic high groundwater level in the vicinity of the Project site is approximately 210 feet below ground surface, and depth to groundwater fluctuated between 300 feet and 350 feet below ground surface between the years 2004 and 2008 (LACDPW 2009). These conditions correlate to an absence of liquefaction and landslide risk. The Project would not expose people or structures to potential substantial adverse effects, including the risk of loss, injury, or death involving rupture of a known earthquake fault, liquefaction, or landslides. There would be no impact and no mitigation is required.

a) Would the project expose people or structures to potential substantial adverse effects, including the risk of loss, injury, or death involving:

ii) Strong seismic ground shaking?

No Impact. The Project site is located within the San Fernando Valley and is bound by the Verdugo, Santa Susana, and San Gabriel mountains to the north and the Santa Monica Mountains to the south (LACDPW 2009).Various unnamed faults are located to the north and northeast of the site; however, none of the unnamed faults traverse the site. The nearest named faults include the Mission Hills, Verdugo, and Northridge Hills Faults to the northwest, east, and southwest, respectively. Consistent with its location in a seismically active region, the site may be subject to strong ground shaking resulting from a major earthquake on one or more faults in the area within the lifetime of the Project. Seismic ground shaking from major earthquakes in the region is not anticipated to be greater than at any other sites in Southern California. The potential for strong ground shaking is an existing seismic hazard that affects the site, and the Project would not exacerbate this condition. Also, the Project would not involve construction of habitable structures or structures whose height, mass, or materials would pose a hazard in the event of an earthquake. There would be no impacts due to exposure to substantial adverse effects from seismic ground shaking and no mitigation is required.

b) Would the project result in substantial soil erosion or the loss of topsoil?

Less than Significant Impact. The largest source of erosion and topsoil loss, particularly in a developed environment, is uncontrolled drainage during construction. Since the Project site is greater than one acre, compliance with the State Water Resources Control Board's (SWRCB's) National Pollutant Discharge Elimination System (NPDES) General Permit for Storm Water

Discharges Associated with the Construction and Land Disturbance Activities[2] (Construction General Permit) would be required (RR HYD-1). Pursuant to the Construction General Permit, the LACFCD would be required to prepare, or have prepared by the Construction Contractor, a Storm Water Pollution Prevention Plan (SWPPP) that would include erosion-control Best Management Practices (BMPs). It is noted that the exposed soils in the basins do not represent topsoil, which was historically removed during construction of the Pacoima Spreading Grounds in the 1930s. Also, implementation of the Project would result in an increase in pervious surface area, where the concrete-sided intake canal is replaced with underground RCPs and an earthen surface. This surface would be contiguous with, and managed the same as, the existing earthen surface in the headworks area. This area does not experience substantial soil erosion. All excavation activities would occur below grade (e.g., within the channel, spreading basins) and, therefore, would not result in off-site transport of sediment (i.e., erosion). Through compliance with RR HYD-1 during construction, there would be a less than significant impact related to soil erosion and loss of topsoil and no mitigation is required.

c) Would the project be located on a geologic unit or soil that is unstable, or that would become unstable as a result of the project, and potentially result in onsite or offsite landslide, lateral spreading, subsidence, liquefaction, or collapse?

No Impact. Liquefaction and landslides are addressed under Thresholds 3.6(a)(iii) and 3.6(a)(iv) above, and there would be no impact associated with these conditions. Because liquefaction is not expected at the Project site, there would also be no impacts related to lateral spreading, a liquefaction-related phenomena. Land subsidence and collapse occur due to the loss of surface elevation due to the removal of subsurface support, such as removal of water, oil, or gas. The Project would not involve the removal of water or other media that would result in subsidence. As discussed, the Project does not include any habitable structures or structures whose height, mass, or materials would pose a hazard in the presence of unstable geologic materials. Therefore, there would be would be no impact related to the potential presence of unstable geologic units and no mitigation is required.

d) Would the project be located on expansive soil, as defined in Table 18-1-B of the Uniform Building Code (1994), creating substantial risks to life or property?

Less than Significant Impact. Expansive soils are soils that swell when they absorb water and shrink as they dry, such as pure clay soils and claystone. The hazard associated with expansive soils is that they can overstress and cause damage to the foundation of buildings set on top of them. There are known clay layers underlying the Project site. However, these layers would be removed throughout the spreading basins to facilitate a greater rate and volume of groundwater infiltration. Where clay layers would remain beneath the site, such as the headworks area, the Project would not involve construction of any structures that would pose a substantial risk due to location on expansive soil. There would be a less than significant impact related to expansive soils and no mitigation is required.

e) Would the project have soils incapable of adequately supporting the use of septic tanks or alternative waste water disposal systems where sewers are not available for the disposal of waste water?

No Impact. The Project does not include the construction of any septic systems. The construction crew would be served by portable toilets that would be brought to the site during construction

[2] Order No. 2009-0009-DWQ, NPDES No. CAS000002, adopted by the SWRCB on September 2, 2009 (effective for all project sites on July 1, 2010) and most recently amended by Order No. 2012-0006-DWQ on July 17, 2012.

activities and removed at the end of construction activities. There would be no impact and no mitigation is required.

MITIGATION MEASURES

There would be no significant impacts related to geology and soils; therefore, no mitigation is required.

3.7 GREENHOUSE GAS EMISSIONS	Potentially Significant Impact	Less Than Significant with Mitigation	Less than Significant Impact	No Impact
Would the project:				
a) Generate greenhouse gas emissions, either directly or indirectly, that may have a significant impact on the environment?	☐	☐	☒	☐
b) Conflict with an applicable plan, policy or regulation adopted for the purpose of reducing the emissions of greenhouse gases?	☐	☐	☒	☐

Information in this section is derived from the *Air Quality, Greenhouse Gas Emissions, and Health Risk Assessment Impact Analysis* (Air Quality Report) dated June 2015 and prepared by Vista Environmental (Vista 2015a). This report is provided in its entirety in Appendix A.

IMPACT ANALYSIS

Regulatory Setting

State

The State currently has no regulations that establish ambient air quality standards for greenhouse gas (GHG) emissions. However, the State has passed numerous laws directing the California Air Resources Board (CARB) to develop actions to reduce GHG emissions. Those most germane to the analysis of the Project's GHG emissions are listed below; please refer to the Air Quality Report in Appendix A for a complete listing of all GHG-related regulations.

Executive Order S-3-05

In June 2005, the California Governor issued Executive Order S 3-05, GHG Emissions, which established the following reduction targets:

- 2010: Reduce greenhouse gas emissions to 2000 levels.
- 2020: Reduce greenhouse gas emissions to 1990 levels.
- 2050: Reduce greenhouse gas emissions to 80 percent below 1990 levels.

The executive order directed the secretary of the California Environmental Protection Agency (CalEPA) to coordinate a multi-agency effort to reduce GHG emissions to the target levels. To comply with the Executive Order, the secretary of CalEPA created the California Climate Action Team (CAT), made up of members from various State agencies and commissions. In March 2006, the team released its first report, which proposed to achieve the targets by building on the voluntary actions of businesses, local governments, and communities and through State incentive and regulatory programs.

Assembly Bill 32

In 2006, the California State Legislature adopted Assembly Bill 32 (AB 32), the California Global Warming Solutions Act of 2006. AB 32 requires CARB to adopt rules and regulations that would achieve GHG emissions equivalent to statewide levels in 1990 by 2020 through an enforceable statewide emission cap which was phased in starting in 2012. The 2020 target of 427 million metric tons of carbon dioxide equivalent ($MMTCO_2e$) requires the reduction of 169 $MMTCO_2e$, or

approximately 30 percent from the State's projected 2020 business as usual emissions of 596 $MMTCO_2e$.

Executive Order S-1-07

Executive Order S-1-07 was issued in 2007 and proclaims that the transportation sector is the main source of GHG emissions in the State, since it generates more than 40 percent of the State's GHG emissions. It establishes a goal to reduce the carbon intensity of transportation fuels sold in the State by at least ten percent by 2020. In 2009, CARB approved the proposed regulation to implement a low carbon fuel standard which was anticipated to reduce GHG emissions by about 16 million metric tons (MMT) per year by 2020. It is anticipated that compliance with the low carbon fuel standard will be based on a combination of both lower carbon fuels and more efficient vehicles.

Regional

South Coast Air Quality Management District Working Group

Since neither CARB nor the Office of Planning and Research (OPR) had developed GHG emissions threshold, in 2008 the SCAQMD convened a Greenhouse Gas Significance Threshold Working Group to provide guidance to local lead agencies on determining the significance for GHG emissions in their CEQA documents. At the September 28, 2010, Working Group meeting, the SCAQMD released its most current version of the draft GHG emissions thresholds, which recommends a tiered approach that either provides a quantitative annual threshold of 3,500 metric tons of carbon dioxide equivalent ($MTCO_2e$) for residential uses, 1,400 $MTCO_2e$ for commercial uses, and 3,000 $MTCO_2e$ for mixed uses. An alternative annual threshold of 3,000 $MTCO_2e$ for all land use types is also proposed.

City of Los Angeles

Green LA/Climate LA

In May 2007, the City of Los Angeles released the climate action plan *Green LA: An Action Plan to Lead the Nation in Fighting Global Warming* (GreenLA), which outlines over 50 action items to reduce emissions to the goal of 35 percent below 1990 levels by 2030 as well as measures to adapt to the effects of climate change. In 2008, *ClimateLA* was published as the implementation program that provides detailed information about each action item discussed in the GreenLA framework.

Regulatory Requirements

There are no regulatory requirements applicable to the analysis of the Project's GHG emissions.

Impact Discussion

a) Would the project generate greenhouse gas emissions, either directly or indirectly, that may have a significant impact on the environment?

Less than Significant Impact. The GHG emissions resulting from implementation of the Project were calculated using CalEEMod using the same model inputs as described for the calculation of criteria pollutants in Section 3.3, Air Quality. As with the analysis in Section 3.3, the worst-case annual GHG emissions were calculated from use of either 14-cy or 18-cy haul trucks. Table 3-7,

Annual Greenhouse Gas Emissions, summarizes the results of the GHG emissions modeling for construction of the Project.

TABLE 3-7
ANNUAL GREENHOUSE GAS EMISSIONS

	Annual GHG Emissions ($MTCO_{2e}$)
On-Site Construction Equipment	695.86
Worker Trips	42.23
Demolition Haul Trucks	0.61
14-cy Haul Trucks	946.97
18-cy Haul Trucks	1,135.43
Worst-CaseTotal Emissions*	**1,874.13**
SCAQMD Threshold	*3,000*
Exceeds Threshold?	**No**

GHG: greenhouse gas; $MTCO_2e$: metric tons of carbon dioxide equivalent

* Based on highest of either 14- or 18-cy haul truck emissions.

Source: Vista 2015a (Appendix A).

As shown, the Project would generate approximately 1,874.13 $MTCO_2e$ for the worst-case construction year. As discussed above, the SCAQMD Working Group has proposed an alternative annual threshold for a cumulative global climate change impact of 3,000 $MTCO_2e$ for all land use types. It is noted that this threshold is intended for permanent land use changes, rather than temporary construction activities. However, based on the 18-month construction period and to provide a conservative analysis of GHG emissions, the 3,000 $MTCO_2e$ per year threshold has been applied to construction of the Project. As indicated, the worst-case annual construction GHG emissions would be well below the 3,000 $MTCO_2e$ per year threshold. Therefore, Project implementation would not result in a cumulative impact related to GHG emissions. There would be a less than significant impact and no mitigation is required.

b) Would the project conflict with an applicable plan, policy or regulation adopted for the purpose of reducing the emissions of greenhouse gases?

Less than Significant Impact. As discussed above, the City of Los Angeles has adopted a climate action plan (GreenLA) and the associated *ClimateLA.* GreenLA details Action W3, which requires the City to implement an innovative water and wastewater integrated resources plan that will maximize use of recycled water including capture and reuse of storm water. The Project would increase the water-holding capacity of the spreading grounds from 530 af to 1,197 af and would increase the percolation rate of the spreading basins from 65 cfs to 142 cfs. As such, the Project promotes the implementation of the City's climate action plan, which meets and exceeds the AB 32 GHG emissions reduction targets. Therefore, the Project would not conflict with any applicable plan, policy, or regulation of an agency adopted for the purpose of reducing GHG emissions. There would be a less than significant impact and no mitigation is required.

MITIGATION MEASURES

There would be no significant impacts related to GHG emissions; therefore, no mitigation measures are required.

3.8 HAZARDS/HAZARDOUS MATERIALS	**Potentially Significant Impact**	**Less than Significant with Mitigation**	**Less than Significant Impact**	**No Impact**
Would the project:				
a) Create a significant hazard to the public or the environment through the routine transport, use, or disposal of hazardous materials?	☐	☐	☐	☒
b) Create a significant hazard to the public or the environment through reasonably foreseeable upset and accident conditions involving the release of hazardous materials into the environment?	☐	☐	☒	☐
c) Emit hazardous emissions or handle hazardous or acutely hazardous materials, substances, or waste within one-quarter-mile of an existing or proposed school?	☐	☐	☒	☐
d) Be located on a site which is included on a list of hazardous materials sites compiled pursuant to Government Code Section 65962.5 and, as a result, would it create a significant hazard to the public or the environment?	☐	☐	☐	☒
e) For a Project located within an airport land use plan or, where such a plan has not been adopted, within two miles of a public airport or public use airport, would the Project result in a safety hazard or people residing or working in the Project area?	☐	☐	☐	☒
f) For a Project within the vicinity of a private airstrip, would the Project result in a safety hazard for people residing or working in the Project area?	☐	☐	☐	☒
g) Impair implementation of or physically interfere with an adopted emergency response plan or emergency evacuation plan?	☐	☐	☒	☐
h) Expose people or structures to a significant risk of loss, injury, or death involving wildland fires, including where wildlands are adjacent to urbanized areas or where residences are intermixed with wildlands?	☐	☐	☐	☒

Information in this section is derived in part from the *Phase I Environmental Site Assessment*, Pacoima Spreading Grounds, Los Angeles, California (Phase I ESA) dated June 2015 and prepared by Geosyntec Consultants (Geosyntec 2015a); and the *Phase II Environmental Site Assessment, Pacoima Spreading Grounds Headwords, Los Angeles California* (Phase II ESA) dated October 2015 and prepared by Geosyntec Consultants Geosyntec Consultants 2015b). These reports are provided in their entirety in Appendices D-1 and D-2, respectively.

IMPACT ANALYSIS

Regulatory Requirements

RR HAZ-1 Construction activities at the Project site shall comply with existing federal, State, and local regulations regarding hazardous material use, storage, disposal, and transport to prevent Project-related risks to public health and safety. All on-site generated waste that meets hazardous waste criteria shall be stored, manifested, transported, and disposed of in accordance with the *California Code of Regulations*

(Title 22) and in a manner to the satisfaction of the local Certified Unified Program Agency (CUPA), the Los Angeles County Fire Department.

Additionally, RR TRA-1 from Section 3.16, Traffic and Transportation, related to temporary traffic control would be applicable to the analysis of emergency response and evacuation plans.

Impact Discussion

a) Would the project create a significant hazard to the public or the environment through the routine transport, use, or disposal of hazardous materials?

No Impact. Operation of the Project would not involve the routine transport, use, or disposal of hazardous materials beyond what is used for the current operation of the Pacoima Spreading Grounds, such as fuels, paints, and solvents. There would be no impact and no mitigation is required.

b) Would the project create a significant hazard to the public or the environment through reasonably foreseeable upset and accident conditions involving the release of hazardous materials into the environment?

Less than Significant Impact. Construction of the Project would involve the limited transport, storage, use, and/or disposal of common construction-related hazardous materials, including oil and grease, solvents, diesel fuel, and other chemicals in vehicles, trucks, and heavy equipment. These materials could be released into the environment in small amounts in the event of an accident. Construction of the Project would not require the use of acutely hazardous materials or substances. To prevent environmental hazards, the handling of hazardous materials used in construction equipment would have to be conducted in accordance with existing regulations (RR HAZ-1). These regulations include the transport of hazardous materials; on-site storage and use of hazardous materials; and procedures to implement in the event of a spill. In addition, under RR HYD-1, the Project would be constructed in compliance with Construction General Permit requirements.

Phase I ESA

A Phase I ESA was prepared for the Project site to determine whether any Recognized Environmental Conditions (RECs) related to past or present land uses on and around the site could present a hazard during construction of the Project. The Phase I ESA identified three RECs at the site:

1. The closed San Fernando City Landfill and abandoned oil and gas wells located adjacent to the site (to the northeast) are potential sources of gas migration to the site.
2. The 2 former underground storage tanks (250 gallons each) for gasoline that were located on site at 10450 Arleta Avenue (northeast portion of the site within the headworks).
3. The petroleum hydrocarbons and lead detected in soil samples during a 2003 Phase II ESA performed in the northeast portion of the site (i.e., the headworks).

Based on these findings, a Phase II ESA was performed in the headworks area.

Phase II ESA

The Phase II ESA involved advancing seven soil borings to a depth of 10 below ground surface (bgs); collecting soil samples at approximate depths of 1, 3, 7, and 10 feet bgs from each boring location for analysis of total petroleum hydrocarbons (TPH) and California Title 22 metals;

installation of soil vapor probes at a depth of 10 feet bgs at 2 boring locations (SV-1 and SV-7); and collecting soil vapor samples from both soil vapor probe locations for analysis of volatile organic compounds (VOCs) and fixed gases. Laboratory testing of the soil samples from depths of 1 and 10 feet bgs was completed initially, with the soil samples from depths of 3 and 7 feet bgs retained for testing as a contingency. Based on the laboratory test results, the soil samples from approximate depths of 3 and 7 feet bgs at two locations (S-2 and S-3) were submitted for testing. The soil boring locations from the Phase II ESA are shown on Exhibit 3-4, Soil Boring Locations; and the results of the soil and soil vapor testing is discussed below. Refer to the Phase II ESA in Appendix D-2 of this IS/MND for further description of the methodology, results, and conclusions of the Phase II ESA.

Total Petroleum Hydrocarbon Soil Sampling Results

Table 3-8, TPH Soil Sampling Results, presents the results of laboratory testing for motor oil-, diesel-, and gasoline-range TPH at approximate depths of 1 and 10 feet bgs.

TABLE 3-8
TPH SOIL SAMPLING RESULTS

Boring ID and Depth (feet)			SV-1		S-2		S-3		S-4		S-5		S-6		SV-7	
Screening Value (mg/kg)	**RSL (I)**	**RSL (R)**	**1**	**9**	**1**	**10**	**1.5**	**9**	**1**	**9**	**1**	**10.5**	**1**	**9**	**1**	**10**
TPH as Motor Oil	3,500,000	230,000	260	ND	86	ND	160	ND	ND	ND	ND	ND	ND	ND	ND	ND
TPH as Diesel	3,500,000	230,000	25	ND	21	ND	19	ND	ND	ND	ND	ND	ND	ND	ND	ND
TPH as Gasoline	–	–	ND	ND	ND	ND		ND	ND	ND	ND	ND	ND	ND	ND	ND

Mg/kg: milligrams per kilogram; RSL: Regional Screening Levels; (I): industrial soil; (R): residential soil; ND: Not Detected.
Source: Geosyntec 20105b. (Appendix D-2)

As shown, TPH was not detected at concentrations in any samples near or above the U.S. Environmental Protection Agency's (USEPA) Regional Screening Levels for both industrial and residential land uses. Specifically, TPH was not detected in any of the soil samples except for SV-1, S-2, and S-3 at approximately 1 foot bgs; these concentrations are well below the screening levels. Therefore, TPH is not considered a contaminant of concern at the Project site.

Title 22 Metals Soil Sampling Results

Table 3-9, Total Metals Soil Sampling Results, and Table 3-10, Soluble Metals Soil Sampling Results, presents the results of laboratory testing for the California Title 22 Metals, so named because they are listed in Title 22 of the California Code of Regulations [Section 66261.24(a)(2)(A)] at approximate depths of 1 and 10 feet bgs for all constituents and also at approximate depths of 3 and 7 feet bgs for lead only. As shown in Table 3-9, Title 22 metals were detected in soil samples collected from borings SV-1, S-2, S-3, S-4, S-5, S-6, and SV-7. With the exception of arsenic and lead, concentrations of all metals detected were below the USEPA Regional Screening Levels (RSLs) for both industrial and residential land uses.

Legend

- Soil Sampling Location
- Soil and Soil Vapor Sampling Location
- Indicating Potential Area of Concern

ft bgs = feet below ground surface
Service Layer Credits: Google Earth: May 2015

Source: Geosyntec Consultants 2015

D:\Projects\COLADPW\J272\Graphics\MND\ex_SoilBoringLocations.ai

Soil Boring Locations

Exhibit 3-4

Pacoima Spreading Grounds Improvement Project

N W E S

150 75 0 150 Feet

BonTerra PSOMAS

(11/20/2015 JAZ) H:\Projects\CoLADPW (DPW)\J272\Graphics\MND\ex3-4_SoilBoringLocations.pdf

TABLE 3-9
TOTAL METALS SOIL SAMPLING RESULTS

Boring ID and Depth (feet)						SV-1		S-2				S-3				S-4		S-5		S-6		SV-7	
Screening Value	**RSL (I) (mg/kg)**	**RSL (R) (mg/kg)**	**TTLC (mg/kg)**	**STLC (mg/l)**	**10x STLC (mg/l)**	**1**	**9**	**1**	**3**	**7**	**10**	**1.5**	**3**	**7**	**9**	**1**	**9**	**1**	**10.5**	**1**	**9**	**1**	**10**
Antimony	470	31	500	15	150	ND	ND	ND	–	–	ND	ND	–	–	ND	ND	ND	ND	ND	ND	ND	ND	ND
Arsenic	3	1	500	5	50	ND	ND	ND	–	–	ND	0.896	–	–	ND	1.35	ND	ND	ND	ND	ND	ND	ND
Barium	220,000	15,000	10,000	100	1,000	212	105	312	–	–	71.7	306	–	–	147	134	86.4	128	123	242	91.7	180	223
Beryllium	2300	160	75	0.75	7.5	0.352	ND	ND	–	–	ND	ND	–	–	ND	ND	ND	ND	ND	0.434	ND	ND	0.349
Cadmium	980	70	100	1	10	1.69	0.732	1.69	–	–	0.655	2.84	–	–	1.01	1.01	0.719	0.903	0.855	1.81	0.673	1.02	1.39
Chromium	120,000	1,800,000	2,500	560/ 5.0*	50**	22.7	7.23	10.5	–	–	9.31	11.6	–	–	14.7	12.3	6.36	11.4	11.0	26.2	5.66	11.1	17.1
Cobalt	350	23	8,000	80	800	17.8	8.45	8.88	–	–	6.22	13.6	–	–	11.4	11.3	7.39	10.6	9.86	20.4	7.56	11.7	16.2
Copper	47,000	3,100	2,500	25	250	28.1	11.8	27.8	–	–	9.94	108	–	–	14.7	20.0	11.0	16.5	40.7	37.7	10.8	18.9	19.8
Lead	800	400	350	5	50	***53.6***	0.518	***117***	***173***	1.05	0.663	***515***	***58.6***	15.9	4.18	7.42	0.681	2.25	20.7	***66.6***	0.897	3.49	1.73
Mercury	40	9	20	0.2	2	ND	ND	ND	–	–	ND	ND	–	–	ND	ND	ND	ND	ND	ND	ND	ND	ND
Molybdenum	5,800	390	3,500	350	3,500	ND	ND	ND	–	–	1.86	ND	–	–	ND	ND	ND	ND	0.715	ND	ND	ND	ND
Nickel	22,000	1,500	2,000	20	200	20.1	5.62	14.9	–	–	3.95	13.4	–	–	10.2	9.72	4.67	8.65	10.9	20.3	4.3	8.51	12.5
Selenium	5,800	390	100	1	10	ND	ND	ND	–	–	ND	ND	–	–	ND	ND	ND	ND	ND	ND	ND	ND	ND
Silver	5,800	390	500	5	50	ND	ND	ND	–	–	ND	ND	–	–	ND	ND	ND	ND	ND	ND	ND	ND	ND
Thallium	1	12	700	7	70	ND	ND	ND	–	–	ND	ND	–	–	ND	ND	ND	ND	ND	ND	ND	ND	ND
Vanadium	5,800	390	2,400	24	240	48.6	15.5	23.5	–	–	11.9	14.4	–	–	24.3	25.1	13.2	19.1	26.2	50.1	13.2	22.2	30.9
Zinc	34,000	350,000	5,000	250	2,500	97.2	26.9	232	–	–	19.8	383	–	–	43.8	49.6	22.6	39.2	37.3	104	24.1	44.1	46.2

Note: values in ***bold italics*** exceed screening value

*Must meet both the STLC limit at 560 and USEPA toxicity characteristic leaching procedure (TCLP) limit; ** 10 times the TCLP value of 5 mg/l

Mg/kg: milligrams per kilogram; mg/l: milligrams per liter; RSL: Regional Screening Levels; (I): industrial soil; (R): residential soil; TTLC: Total Threshold Limit Concentration; STLC: Soluble Threshold Limit Concentration; ND: Not Detected; –: sample not tested for this constituent.

Source: Geosyntec 20105b. (Appendix D-2)

Arsenic was detected at concentrations above the USEPA RSL for residential land uses, but not industrial land uses, in the soil sample collected at a depth of 1 foot bgs at location S-4. It is noted that the soils samples were compared to both the residential RSLs, in addition to the industrial RSLs, in light of the potential for a portion of the headworks area to be developed as a public recreation area in the future. However, the detected concentration of arsenic is within the background values for Southern California soils. The California Department of Toxic Substances Control (DTSC) document *Evaluation of Arsenic as a Chemical of Potential Concern at Proposed School Sites in the Los Angeles Area* reports the 95 percent Upper Confidence Limit of the 99th percentile concentration (CUL0.95(X0.99)) for arsenic in the Los Angeles Unified School District as 11.3 mg/kg and states that "If all the onsite samples are less than the CUL0.95(X0.99) then arsenic can be eliminated as a chemical of potential concern at the site." The highest reported arsenic concentration in the soil samples analyzed from the Project site is 1.35 mg/kg. Therefore, arsenic is not considered a contaminant of concern at the Project site.

Lead was detected at concentrations above the USEPA RSL for residential land uses in the soil sample collected at a depth of 1.5 feet bgs at location S-3. Also, lead was detected at concentrations of higher than 10xSTLC (Soluble Threshold Limit Concentration) in soil samples collected at an approximate depth of 1 foot bgs in locations SV-1, S-2, S-3 and S-6.

Based on these results, the Waste Extraction Test (WET) analysis was subsequently performed on these samples. The WET analysis resulted in lead concentrations of higher than the STLC action level (i.e., 5 mg/l) only in the soil samples collected at an approximate depth of 1 foot bgs at locations S-2 and S-3.

Based on these results (i.e. WET analysis), to delineate the vertical extent of lead, the soil samples collected at depths of 3 and 7 feet bgs at locations S-2 and S-3 were analyzed for both total lead (see Table 3-9) and soluble lead (see Table 3-10).

TABLE 3-10
SOLUBLE METALS SOIL SAMPLING RESULTS

Boring ID and Depth (feet)		**SV-1**	**S-2**			**S-3**			**S-6**
Screening Value (mg/l)	**STLC**	**1**	**1**	**3**	**7**	**1.5**	**3**	**7**	**1**
Lead	5	0.733	***11.7***	***11.5***	ND	***15.6***	***5.89***	0.275	0.969

Note: values in ***bold italics*** exceed screening value
Mg/l: milligrams per liter; STLC: Soluble Threshold Concentration Limit; ND: Not Detected.
Source: Geosyntec 20105b. (Appendix D-2)

As shown, the samples from an approximate depth of 3 feet bgs at locations S-2 and S-3 had lead concentrations of higher than the STLC action level (i.e., 5 mg/l), whereas the samples collected at an approximate depth of 7 feet bgs did not have lead concentrations of higher than the STLC action level. Locations S-2 and S-3 are near the hazardous materials storage area, which is primarily used to store paint, and are consistent with the results of the Phase II ESA performed in 2003.

Based on the results of the Phase II ESA, the LACFCD arranged for the delineation of lead-impacted soils by the Geotechnical and Materials and Engineering Division of the Los Angeles County Department of Public Works (LACDPW), for eventual excavation and disposal. The LACDPW completed the delineation of the lead-impacted area was in October 2015. While the delineation and excavation of lead-impacted soils has been triggered by the investigations

necessary to complete the Project, this activity is not part of the Project and is will be completed separately, and prior to, the Project. The delineation was performed by hand augering soil borings, and collecting soil samples, in a "step-out" pattern that surrounds the area of known impact until laboratory testing indicates the horizontal and vertical limits of contamination are reached on all sides. Based on this delineation, the LACDPW will be arranging for the excavation and appropriate disposal of the localized, shallow area of lead-impacted soils by a qualified consultant. This excavation will be scheduled to occur prior to initiation of earth-moving activities associated with the Project, and the excavated area will be backfilled with clean fill soils. This approach is to ensure that lead adsorbed to soil particles is not inadvertently released into the environment and potentially affect the construction crew or surrounding residents and other receptors.

Soil Vapor Sampling Results

Table 3-11, Soil Vapor Sampling Results, presents the results of laboratory testing of soil vapor samples collected at the two soil vapor probes locations (SV-1 and SV-7) installed at approximate depths of 10 feet bgs.

TABLE 3-11
SOIL VAPOR SAMPLING RESULTS

	Boring ID and Depth (feet)		SV-1	SV-7
Screening Value ($\mu g/m^3$)	**RSL (I)**	**RSL (R)**	**10**	**10**
VOCs				
Acetone	280,000,000	32,000,000	22	14
Benzene	3,200	360	36	ND
2-Butanone	NL	NL	8.5	7.7
1,4-Dichlorobenzene	2,200	260	5.0	7.1
Dochlorodiflouromethane	880,000	100,000	2.7	ND
Ethylbenzene	9,800	1,100	15	ND
4-Ethyltoluene	NL	NL	8.7	ND
Tetrachloroethene	94,000	11,000	47	21
Toluene	44,000,000	5,200,000	200	ND
1,2,4-Trimethylbenzene	62,000	7,300	23	ND
1,3,5-Trimethylbenzene	NL	NL	7.9	ND
o-Xylene	880,000	100,000	26	ND
p/m-Xylene	880,000	100,000	100	ND
Fixed Gases				
Carbon Dioxide	NA	NA	1.95	2.48
Oxygen (+Argon)	NA	NA	21.2	20.6
Nitrogen	NA	NA	76.9	76.9

µg/m3: micrograms per cubic meter; RSL: Regional Screening Levels; (I): industrial soil; (R): residential soil; NL: Not Listed; NA: Not Applicable; ND: Not Detected.

Source: Geosyntec 20105b. (Appendix D-2)

As shown, a total of 13 VOCs were detected in the soil vapor samples. The number of detected VOCs as well as the concentrations (with the exception of 1,4-Dichlorobenzene) at SV-1 are higher than those at SV-7. However, all VOCs were detected at microgram per cubic meter (ug/m3) levels, below industrial guidance thresholds (e.g., California Human Health Screening

Levels). The VOC concentrations detected in the headworks area are below actionable thresholds given the current use of the site (i.e., the headworks) and potential future use as recreational open space.

Also as shown in Table 3-11, three fixed gases were detected in soil vapor samples. Methane was not detected at the sampling locations. The absence of detectable levels of methane at the two soil vapor sampling locations provides additional evidence that the closed landfill and nearby oil wells do not appear to be of significant environmental concern to the site.

Spreading Grounds Soil Sampling for Disposal

The Pacoima Spreading Grounds, south of the headworks, receives surface water and debris from a large subwatershed area in the San Gabriel Mountains and the San Fernando Valley urban areas. Because of this, there is potential for pollutants common in urban areas (e.g., oils, metals, and pesticides) to enter the facility in runoff and collect in the sediment. However, the spreading grounds operated by LACFCD bypass what is referred to as the "first flush" of storm water runoff, generally about the first ¾-inch of rain, that contains the majority of pollutants that runoff can collect. Regardless, prior to sediment being accepted at the Vulcan-owned pits, soil samples must be collected and laboratory tested to confirm it is not a hazardous material. This testing will be performed during excavation activities. In summary, with completion of the remediation of lead-impacted soil in the headwords by the LACDPW, on behalf of the LACFCD, there would be less than significant impacts related to encounter of hazardous materials that could be released into the environment during excavation and other construction activities. Compliance with RR HAZ-1 and RR HYD-1 would ensure that impacts related to use of common construction-related hazardous materials would be less than significant and no mitigation is required.

c) Would the project emit hazardous emissions or handle hazardous or acutely hazardous materials, substances, or waste within one-quarter-mile of an existing or proposed school?

Less than Significant Impact. There are no schools within ¼ mile of the Project site; however, there are schools within approximately ¼ mile of Haul Routes A and B. These schools include:

- Bert Corona Charter School (9400 Remick Avenue, Arleta)
- Sharp Avenue Elementary (13800 Pierce Street, Arleta)
- Mary Immaculate School (10390 Remick Avenue, Pacoima)
- Pacoima Middle School (9919 Laurel Canyon Boulevard, Pacoima)
- Telfair Elementary School (10975 Telfair Avenue, Pacoima)
- Sun Valley High School (9171 Telfair Avenue, Sun Valley)

As discussed in Section 3.2, Air Quality, local and regional emissions of criteria air pollutants would be below all SCAQMD thresholds, and TAC emissions— namely diesel particulate matter from on-site construction equipment and the haul trucks—would not result in health risks to any sensitive receptors near the Project site or the three Vulcan pits proposed for sediment disposal. These locations represent the highest concentrations of TAC emissions, because of truck idling. Therefore, the emissions of TACs from the haul trucks during travel to and from the site and the pits would be lower than that quantified in the Health Risk Assessment (Appendix A) prepared for the Project. As such, implementation of the Project would not involve emissions in quantities that could be considered hazardous in the vicinity of any school. There would be a less than significant impact and no mitigation is required.

d) Would the project be located on a site which is included on a list of hazardous materials sites compiled pursuant to Government Code Section 65962.5 and, as a result, would it create a significant hazard to the public or the environment?

No Impact. As discussed under Threshold 3.8(b), a Phase I ESA was prepared for the Project site. A Phase I ESA involves a hazardous materials records search, which includes the databases within California's Hazardous Waste and Substances List (also called the Cortese List) compiled pursuant to Section 65962.5 of the *California Government Code.* The Project site is not identified on the Cortese List. However, the site is identified on other regulatory databases related to the former underground storage tanks in the headworks area and discussed under Threshold 3.8(b). These tanks have been removed and represent no hazard to the site or the public. There would be no impact related to identification on the Cortese List or any other hazardous materials database such that a significant hazard to the public or the environmental would occur, and no mitigation is required.

e) For a project located within an airport land use plan or, where such a plan has not been adopted, within two miles of a public airport or public use airport, would the project result in a safety hazard for people residing or working in the project area?

f) For a project within the vicinity of a private airstrip, would the project result in a safety hazard for people residing or working in the project area?

No Impact. The closest airport to the Project site is Whiteman Airport, which is located approximately 1.5 miles east of the Project site at the nearest point. Whiteman Airport is owned and operated by the County of Los Angeles as a public, general aviation airport (County of Los Angeles 2015b). The site is not within the Airport Influence Area of Whiteman Airport (ALUC 2003). Also, there are no private airstrips in the Project vicinity or any other public airports within two miles of the site. There would be no impact related to air traffic and no mitigation is required.

g) Would the project impair implementation of or physically interfere with an adopted emergency response plan or emergency evacuation plan?

Less than Significant Impact. Construction activities would be staged on the Project site and would not interfere with any current emergency response plans or emergency evacuation plans for local, State, or federal agencies. As discussed in Section 3.16, Transportation, haul truck trips for sediment export were determined to result in a less than significant impact on the 24 study intersections. Additionally, any activities on or adjacent to public streets that could limit traffic flow (e.g., construction equipment delivery) would be conducted with traffic-control measures per the LACDPW Greenbook (RR TRA-1). RR TRA-1 would ensure that construction traffic would be managed in compliance with LACDPW Greenbook standards, as discussed in Section 3.16, Transportation, to ensure that existing circulation would not be impacted during Project construction in such a way that would physically impair or impede emergency response or evacuation. Therefore, compliance with RR TRA-1 would ensure that impacts related to emergency evacuation plans would be less than significant.

h) Would the project expose people or structures to a significant risk of loss, injury, or death involving wildland fires, including where wildlands are adjacent to urbanized areas or where residences are intermixed with wildlands?

No Impact. The Project site is surrounded by urban land uses and is not designated as within a Very High Fire Hazard Severity Zone (VHFHSZ) (CAL FIRE 2007). There would be no impact related to wildland fire and no mitigation is required.

MITIGATION MEASURES

There would be no significant impacts related to hazards and hazardous materials; therefore, no mitigation measures are required.

3.9 HYDROLOGY AND WATER QUALITY	**Potentially Significant Impact**	**Less than Significant with Mitigation**	**Less than Significant Impact**	**No Impact**
Would the project:				
a) Violate any water quality standards or waste discharge requirements?	☐	☐	☒	☐
b) Substantially deplete groundwater supplies or interfere substantially with groundwater recharge such that there would be a net deficit in aquifer volume or a lowering of the local groundwater table level (e.g., the production rate of pre-existing nearby wells would drop to a level which would not support existing land uses or planned uses for which permits have been granted)?	☐	☐	☒	☐
c) Substantially alter the existing drainage pattern of the site or area, including through the alteration of the course of a stream or river, in a manner which would result in substantial erosion or siltation onsite or offsite?	☐	☐	☒	☐
d) Substantially alter the existing drainage pattern of the site or area, including through the alteration of the course of a stream or river, or substantially increase the rate or amount of surface runoff in a manner which would result in flooding onsite or offsite?	☐	☐	☒	☐
e) Create or contribute runoff water which would exceed the capacity of existing or planned stormwater drainage systems or provide substantial additional sources of pollutant runoff?	☐	☐	☐	☒
f) Otherwise substantially degrade water quality?	☐	☐	☒	☐
g) Place housing within a 100-year flood hazard area as mapped on a federal Flood Hazard Boundary or Flood Insurance Rate Map or other flood hazard delineation map?	☐	☐	☐	☒
h) Place within a 100-year flood hazard area structures which would impede or redirect flood flows?	☐	☐	☐	☒
i) Expose people or structures to a significant risk of loss, injury, or death involving flooding, including flooding as a result of the failure of a levee or dam?	☐	☐	☐	☒
j) Inundation by seiche, tsunami, or mudflow?	☐	☐	☐	☒

IMPACT ANALYSIS

Regulatory Requirements

RR HYD-1 Prior to the start of construction activities, the Los Angeles County Flood Control District (LAFCD) or the Construction Contractor shall file a Permit Registration Document (PRD) with the State Water Resources Control Board (SWRCB) in order to obtain coverage under the National Pollutant Discharge Elimination System (NPDES) General Permit for Storm Water Discharges Associated with the Construction and Land Disturbance Activities (Order No. 2009-009-DWQ, NPDES No. CAS000002) or the latest approved general permit. This permit is required for construction activities (including demolition, clearing, grading, and excavation) and

other land-disturbance activities that result in the disturbance of 1.0 acre or more of total land area. The PRD consists of a Notice of Intent (NOI), Risk Assessment, Site Map, Storm Water Pollution Prevention Program (SWPPP), annual fee, and a signed certification statement. Pursuant to permit requirements, the Contractor shall develop and incorporate Best Management Practices (BMPs) for reducing or eliminating construction-related pollutants in site runoff. In addition, during construction, the LACFCD shall comply with the appropriate requirements listed in the adopted Municipal Separate Storm Sewer System (MS4) Permit (Order No. R4-2012-0175, NPDES No. CAS004001), which regulates municipal storm water and non-storm water discharges.

Impact Discussion

a) Would the project violate any water quality standards or waste discharge requirements?

f) Would the project otherwise substantially degrade water quality?

Less than Significant Impact. The Project site is within the jurisdiction of the Los Angeles (Region 4) Regional Water Quality Control Board (RWQCB). The Project could result in short-term construction impacts to surface water quality from grading and other construction-related activities (e.g., erosion, spills, and leaks from construction equipment). Compliance with RR HYD-1 regarding implementation of non-storm water management and pollution-control BMPs, as outlined in the SWPPP for the Project, would ensure the pollutant levels in runoff do not violate standards. Impacts on water quality during construction would be less than significant with compliance with RR HYD-1.

Operation of the Project would not violate any water quality standards or waste discharge requirements, as it would not generate any new land use or introduce any new sources of wastewater discharge or effluent that could adversely impact wastewater. The Project would not generate wastewater that would require conveyance or treatment in on-site septic systems or at wastewater plants in the region. Portable toilets would be provided for employees at the construction areas, and these portable toilets would be regularly cleaned and their contents disposed of offsite by an outside company. Wastewater from these portable toilets would not exceed RWQCB treatment requirements, and the Project would not need new or expanded treatment facilities. Construction and operation of the Project would not involve wastewater discharges that could violate standards or degrade water quality. There would be less than significant impacts related to surface water quality and no mitigation is required.

b) Would the project substantially deplete groundwater supplies or interfere substantially with groundwater recharge such that there would be a net deficit in aquifer volume or a lowering of the local groundwater table level (e.g., the production rate of pre-existing nearby wells would drop to a level which would not support existing land uses or planned uses for which permits have been granted)?

Less than Significant Impact. The Project site is underlain by the San Fernando Valley Groundwater Basin, and the purpose of the Pacoima Spreading Grounds is to recharge this Basin. Other facilities that recharge this Basin include the Lopez, Tujunga, and Hansen Spreading Grounds. Construction of the Project would involve the Pacoima Spreading Grounds being off-line (i.e., not accepting water diverted from Pacoima Wash) for one wet season. The LACFCD estimates the Pacoima Spreading Grounds conserve approximately 5,200 af of water in an average storm year (Bodenchak 2015b). Although Southern California is currently experiencing extreme drought and an average storm year has not occurred in several years, for purposes of

this analysis, it is assumed that construction of the Project would result in the loss of 5,200 af of water for infiltration as it would bypass the site and drain to the ocean.

The LADWP was consulted regarding the impact of this one-time net loss of groundwater recharge to the San Fernando Valley Groundwater Basin on aquifer volume and associated groundwater levels. The LADWP concluded the "temporary loss of Pacoima Spreading Grounds for one storm season during the construction of the project will not interfere substantially with groundwater recharge of the San Fernando Groundwater Basin" (Yoshida 2015).

Construction of the Project would involve limited use of water to suppress fugitive dust emissions during excavation grading activities. This water would be delivered to the site in a water truck. The Project activities would require the use of municipal water supplies during construction activities; however, the amount of water to be used for dust control would be finite and would ensure that fugitive dust emissions do not pose a hazard to construction workers or surrounding receptors. There would be less than significant impact on groundwater supplies related to fugitive dust irrigation.

In the long term, the Project is expected to increase annual water conservation by approximately 10,500 af per wet year (LACFCD 2011). This is roughly twice the average water conservation currently provided in an average wet year. Therefore, operation of the Project would be beneficial to groundwater supplies and groundwater recharge. There would be a less than significant impact on groundwater supplies from construction of the Project, and no impact during long-term operation; no mitigation is required.

c) Would the project substantially alter the existing drainage pattern of the site or area, including through the alteration of the course of a stream or river, in a manner that would result in substantial erosion or siltation onsite or offsite?

d) Would the project substantially alter the existing drainage pattern of the site or area, including through the alteration of the course of a stream or river, or substantially increase the rate or amount of surface runoff in a manner that would result in flooding onsite or offsite?

Less than Significant Impact*.* The spreading basins would be off-line during construction of the Project and an estimated 5,200 af of flows in the Pacoima Wash would bypass the site and drain to the ocean. There is existing drainage infrastructure in place to manage this runoff such that there would be no adverse downstream affects (i.e., erosion, siltation, flooding). Within the basins, the only water present would be from rain and dust-control irrigation. These water sources would percolate into the soil and would be not be in volumes necessitating flows from the outlet weir, which is only used in emergencies. At the headworks, the existing belowgrade open concrete intake canal being replaced with underground pipelines would not change the pattern of drainage, only the conveyance structure (i.e., from open culvert to closed pipelines).

Finally, as discussed under Threshold 3.9(a)(f), the Project would be required to implement non-storm water management and pollution-control BMPs, as outlined in the SWPPP for the Project (RR HYD-1), in order to manage pollutants in runoff including excess sediment. Therefore, construction of the Project would not alter the drainage pattern or increase the rate or volume of storm water runoff such that on- or off-site erosion, siltation, or flooding would occur. There would be a less than significant impact and no mitigation is required.

e) Would the project create or contribute runoff water which would exceed the capacity of existing or planned stormwater drainage systems or provide substantial additional sources of pollutant runoff?

No Impact. As discussed in Threshold 3.9(a), the Project would not result in additional sources of pollutant runoff (i.e., waste discharge). As discussed in Threshold 3.9(c) and 3.9(d) above, there is existing drainage infrastructure in place to manage the estimated 5,200 af of flows in Pacoima Wash that would bypass the site such that there would be no adverse downstream effects. Also, the Project would not create new impervious surfaces that could increase the rate or amount of storm water runoff. Therefore, the Project would have no impact on the capacity of the existing downstream storm water drainage system.

g) Would the project place housing within a 100-year flood hazard area as mapped on a federal Flood Hazard Boundary or Flood Insurance Rate Map or other flood hazard delineation map?

h) Would the project place within a 100-year flood hazard area structures which would impede or redirect flood flows?

No Impact. According to Federal Emergency Management Agency (FEMA) Flood Insurance Rate Map, the Project site is not located within a 100-year flood hazard area (FEMA 2008). Also, the Project would not involve the construction of any housing or other temporary or permanent habitable structures. There would be no impact related to placement of housing or structures in a flood zone, and no mitigation is required.

i) Would the project expose people or structures to a significant risk of loss, injury, or death involving flooding, including flooding as a result of the failure of a levee or dam?

No Impact. Due to the distance of the Project site to the Pacific Ocean (approximately 15 miles to the southwest) and the numerous structures between the Project site and the ocean, there is no risk of on-site hazard due to tsunamis (seismically induced waves). According to Exhibit G: Inundation & Tsunami Hazard Areas of the *City of Los Angeles General Plan's* Safety Element, the Project site is within the inundation area of Pacoima Reservoir (City of Los Angeles 1996). The likelihood of a seismic or other event that would result in a failure of the dam at Pacoima Reservoir during Project construction, exposing construction workers to the hazard of inundation, is not considered reasonably foreseeable and is therefore not a significant impact. The Project would not involve placing habitable structures or otherwise changing the land use for long-term operation of the site. The existing perimeter levees would not be raised, lowered, or otherwise modified as part of the Project. As such, there would be no impact related to location in an inundation area from Project operation.

j) Would the project cause inundation by seiche, tsunami, or mudflow?

No Impact. Due to the distance of the Project site to the Pacific Ocean (approximately 15 miles to the southwest) and the numerous structures between the Project site and the ocean, there is no risk of on-site hazard due to tsunamis (seismically induced waves)(City of Los Angeles 1996). The nearest large body of open water is Van Norman Lakes Reservoir, located approximately three miles to the northwest of the site. Due to distance and intervening development, a seiche at the Van Norman facility would not affect the Project site. The Pacoima Spreading Grounds holds water temporarily during percolation into the groundwater basin; however, the amount of water would not be large enough to be at risk for a seiche. The Project site and surrounding areas are essentially flat, and there are no slopes or exposed lands that could generate mudflow in the

vicinity. There would be no impacts related to tsunami, seiche, or mudflow, and no mitigation is required.

MITIGATION MEASURES

There would be no significant impacts related to hydrology or water quality; therefore, no mitigation measures are required.

3.10 LAND USE AND PLANNING	Potentially Significant Impact	Less than Significant with Mitigation	Less than Significant Impact	No Impact
Would the project:				
a) Physically divide an established community?	☐	☐	☐	☒
b) Conflict with any applicable land use plan, policy, or regulation of an agency with jurisdiction over the Project (including, but not limited to the general plan, specific plan, local coastal program, or zoning ordinance) adopted for the purpose of avoiding or mitigating an environmental effect?	☐	☐	☐	☒
c) Conflict with any applicable habitat conservation plan or natural community conservation plan?	☐	☐	☐	☒

IMPACT ANALYSIS

Regulatory Requirements

None required.

Impact Discussion

a) Would the project physically divide an established community?

No Impact. There are no residential uses or established communities on the Project site. The City of Los Angeles communities of Arleta and Missions Hills are located proximate to the site, and the Project would not involve any land use changes in the surrounding communities. There would be no impact related to dividing an established community and no mitigation is required.

b) Would the project conflict with any applicable land use plan, policy, or regulation of an agency with jurisdiction over the project (including, but not limited to the general plan, specific plan, local coastal program, or zoning ordinance) adopted for the purpose of avoiding or mitigating an environmental effect?

No Impact. Under the Arleta-Pacoima and Mission Hills-Panorama City-North Hills Community Plans, the Project site has a General Plan Land Use designation of Open Space (City of Los Angeles 2009, 2010). The Project site is zoned as Open Space (OS-1XL-O), which allows for recreational facilities, natural resource preserves, public water supply reservoirs, and percolation basins, among other uses (City of Los Angeles 2015a, 2015b). The Project would not require any change in existing land uses on the Project site and would not require a General Plan amendment or zone change. Further, as the Project site is County-owned, the Project would not be subject to the City's zoning requirements. Therefore, implementation of the Project would not conflict with any applicable land use plan, policy, or regulation of the City of Los Angeles adopted for the purpose of avoiding or mitigating an environmental effect. There would be no impact and no mitigation is required.

c) Would the project conflict with any applicable habitat conservation plan or natural community conservation plan?

No Impact. There is no habitat conservation plan or natural community conservation plan for the Project area. Also, the Project site is not located in a designated Significant Ecological Area (SEA) under the County's SEA program. There would be no impact and no mitigation is required.

MITIGATION MEASURES

There would be no impacts related to land use and planning; therefore, no mitigation measures are required.

3.11 MINERAL RESOURCES	**Potentially Significant Impact**	**Less than Significant with Mitigation**	**Less than Significant Impact**	**No Impact**
Would the project:				
a) Result in the loss of availability of a known mineral resource that would be of value to the region and the residents of the state?	☐	☐	☐	☒
b) Result in the loss of availability of a locally-important mineral resource recovery site delineated on a local general plan, specific plan, or other land use plan?	☐	☐	☐	☒

IMPACT ANALYSIS

Regulatory Requirements

None required.

Impact Discussion

a) Would the project result in the loss of availability of a known mineral resource that would be of value to the region and the residents of the state?

b) Would the project result in the loss of availability of a locally-important mineral resource recovery site delineated on a local general plan, specific plan, or other land use plan?

No Impact. The Project site has been used as a spreading basin since the 1930s and has never been used for mineral resource recovery (USGS 2015). The California Geological Survey conducted a series of mineral land classification studies under the authority of the Surface Mining and Reclamation Act of 1975. The Project site is located in a Mineral Resource Zone of MRZ-3 (DOC 1979). MRZ-3 indicates that the significance of mineral resources cannot be evaluated from available data. Although sediment would be removed from the site as part of the Project, this sediment is not of value as a mineral resource. There would be no impact and no mitigation is required.

MITIGATION MEASURES

There would be no impacts related to mineral resources; therefore, no mitigation measures are required.

3.12 NOISE	**Potentially Significant Impact**	**Less than Significant with Mitigation**	**Less than Significant Impact**	**No Impact**
Would the project result in:				
a) Exposure of persons to or generation of noise levels in excess of standards established in the local general plan or noise ordinance, or applicable standards of other agencies?	☐	☐	☒	☐
b) Exposure of persons to or generation of excessive groundborne vibration or groundborne noise levels?	☐	☐	☒	☐
c) A substantial permanent increase in ambient noise levels in the project vicinity above levels existing without the project?	☐	☐	☐	☒
d) A substantial temporary or periodic increase in ambient noise levels in the project vicinity above levels existing without the project?	☐	☒	☐	☐
e) For a project located within an airport land use plan or, where such a plan has not been adopted, within two miles of a public airport or public use airport, would the project expose people residing or working in the project area to excessive noise levels?	☐	☐	☒	☐
f) For a project within the vicinity of a private airstrip, would the project expose people residing or working in the project area to excessive noise levels?	☐	☐	☒	☐

Information in this section is derived from the *Noise Impact Analysis, Pacoima Spreading Grounds Improvement Project, City of Los Angeles* (Noise Report) dated August 2015 and prepared by Vista Environmental (Vista 2015b). This report is provided in its entirety in Appendix E.

IMPACT ANALYSIS

Regulatory Setting

Federal

Surface transportation system noise is regulated by a host of agencies, including the Federal Transit Administration (FTA). Transit noise is regulated by the federal Urban Mass Transit Administration (UMTA), while freeways that are part of the interstate highway system are regulated by the Federal Highway Administration (FHWA). Although the Project is not under the jurisdiction of the FTA, the FTA is the only agency that has defined what constitutes significant construction and transportation source noise impacts from implementing a project. The FTA standards are based on extensive studies by the FTA and other governmental agencies on the human effects and reaction to noise from construction and transportation sources. The FTA recommends developing construction noise criteria on a project-specific basis that utilizes local noise ordinances if possible. However, local noise ordinances usually relate to nuisance and hours of allowed activity and sometimes specify limits in terms of maximum levels, but are generally not practical for assessing the noise impacts of a construction project. Project construction noise criteria should take into account the existing noise environment, the absolute noise levels during construction activities, the duration of the construction, and the adjacent land uses.

State

On-Road Vehicle Noise

Sections 27200 to 27207 of the *California Vehicle Code* provide noise limits for vehicles operated in California. For vehicles over 10,000 pounds, noise is limited to 88 decibels (dB) for vehicles manufactured before 1973, 86 dB for vehicles manufactured before 1975, 83 dB for vehicles manufactured before 1988, and 80 dB for vehicles manufactured after 1987. All measurements are based at 50 feet from the vehicle. For the Project, "on-road" vehicles over 10,000 pounds would include haul trucks and construction equipment delivery trucks/tractor trailers.

Off-Road Vehicle Noise

Sections 38365 to 38380 of the *California Vehicle* provides noise limits for off-highway motor vehicles operated in California, as follows: 92 A-weighted decibels (dBA) for vehicles manufactured before 1973, 88 dBA for vehicles manufactured before 1975, 86 dBA for vehicles manufactured before 1986, and 82 dBA for vehicles manufactured after December 31, 1985. All measurements are based at 50 feet from the vehicle.

Vibration Standards

The *California Administrative Code* (Title 14, §15000) requires that all State and local agencies implement the State CEQA Guidelines, which require the analysis of exposure of persons to excessive groundborne vibration. However, no statute has been adopted by the State that quantifies the level at which excessive groundborne vibration occurs.

Caltrans issued the *Transportation- and Construction-Induced Vibration Guidance Manual* in 2004. The manual provides practical guidance to Caltrans engineers, planners, and consultants who must address vibration issues associated with the construction, operation, and maintenance of Caltrans projects. However, this manual is also used as a reference point by many lead agencies and CEQA practitioners throughout California, as it provides numeric thresholds for vibration impacts. Thresholds are established for continuous and transient sources of vibration, which found that the human response becomes distinctly perceptible at a peak particle velocity (ppv) of 0.25 inch per second for transient sources and 0.04 inch per second ppv for continuous sources.

City of Los Angeles

Although the project is located on County of Los Angeles-owned property, the noise-sensitive receptors in proximity to the site are located in the City of Los Angeles. Therefore, City of Los Angeles noise regulations, rather than County, have been applied to this analysis. Also, the County's Noise Ordinance requirements are not applicable to mobile noise sources such as automobiles or heavy trucks when traveling in a legal manner on public roadways or on private property. Mobile noise source control is preempted by the federal and State laws discussed above. The City of Los Angeles Municipal Code establishes the following applicable standards related to construction noise that are relevant to the Project.

Section 41.40, Noise Due to Construction, Excavation Work – When Prohibited, of the City Code states:

> (a) No person shall, between the hours of 9:00 PM and 7:00 AM of the following day, perform any construction or repair work of any kind upon, or any excavating for, any building or structure, where any of the foregoing entails the

> use of any power driven drill, riveting machine excavator or any other machine, tool, device or equipment which makes loud noises to the disturbance of persons occupying sleeping quarters in any dwelling hotel or apartment or other place of residence. In addition, the operation, repair or servicing of construction equipment and the job-site delivering of construction materials in such areas shall be prohibited during the hours herein specified. Any person who knowingly and willfully violates the foregoing provision shall be deemed guilty of a misdemeanor punishable as elsewhere provided in this Code.

Section 112.03, Construction Noise, of the City Code states that noise due to construction or repair work shall be regulated as provided by Section 41.40 of this Code.

Regulatory Requirements

RR NOI-1 In compliance with the City of Los Angeles Municipal Code, Project construction activities shall be limited to the hours of 7:00 AM to 9:00 PM. The Los Angeles County Flood Control District has voluntarily defined more restrictive construction hours (i.e., generally eight-hour days between the hours of 7:00 AM and 7:00 PM Monday through Friday and between 8:00 PM and 5:00 PM on Saturday) than required by City Code.

Impact Discussion

a) Would the project result in exposure of persons to or generation of noise levels in excess of standards established in the local general plan or noise ordinance, or applicable standards of other agencies?

Less than Significant Impact. Implementation of the Project would result in noise and vibration related to on-site construction equipment and haul truck traffic. The sensitive receptors considered in the following analysis are the same as described in Section 2.4.1, Project Components, of this IS/MND. The existing noise levels in the Project vicinity and the anticipated construction noise and vibration levels are discussed below.

Existing Noise Conditions

Noise measurements were taken in the vicinity of the Project site to determine the existing noise conditions. The noise monitoring locations were selected to provide a representative sampling of the noise levels created by nearby noise sources as well as experienced by nearby sensitive receptors. The field survey noted that noise in the Project area is generally characterized by vehicular traffic on Devonshire Street, Arleta Avenue, and I-5 as well as aircraft noise. Table 3-12, Existing Noise Conditions, summarizes the results of the noise monitoring and Exhibit 3-5, Noise Monitoring Locations, depicts the locations of the four noise-monitoring sites. As shown, existing average noise levels (L_{eq}) ranged from 49.6 to 67.3 dBA, with the highest noise measurements at Site 4 located near the intersection of Telfair Avenue and Sheldon Street.

Project Boundary

4 Noise Measurement Location

Source: Vista Environmental 2015

D:\Projects\COLADPW\J272\Graphics\MND\ex_NoiseMonitoringLocations.ai

Noise Monitoring Locations

Exhibit 3-5

Pacoima Spreading Grounds Improvement Project

N W E S

1 0.5 0 1 Miles

BonTerra PSOMAS

(11/20/2015 JAZ) H:\Projects\CoLADPW (DPW)\J272\Graphics\MND\ex3-5_NoiseMonitoringLocations.pdf

TABLE 3-12
EXISTING NOISE CONDITIONS

Site	Site Description	Primary Noise Source	Start Time (PM)	Noise Levels	
				dBA L_{eq}	dBA L_{max}
1	Located next to the southwest corner of the intake structure	Traffic on I-5 and aircraft	12:19	56.9	69.5
2	Located west of the spreading grounds on the south side of Devonwood Park and approximately 150 feet east of the Woodman Ave centerline	Traffic on Woodman Ave, children at the park, and aircraft	12:42	54.4	69.5
3	Located east of the spreading grounds and on the southeast side of Fillmore St, and approximately 125 feet southwest of the end of Fillmore St	Traffic on Devonshire St and aircraft	1:16	49.6	62.3
4	Located at the parking lot on the north corner of Sun Valley High School and approximately 50 feet southeast of the Sheldon St centerline and 100 feet southwest of the Telfair Ave centerline	Sheldon Street, Telfair Avenue, and children at high school	1:50	67.3	82.0

dBA: A-weighted decibels; L_{eq}: average sound level; L_{max}: maximum noise level; I: Interstate

Source: Vista 2015b (Appendix E)

On-Site Construction Equipment Noise

Section 41.40(a) of the City of Los Angeles Municipal Code exempts construction activities from the City's noise standards provided that construction activities do not take place between the hours of 9:00PM and 7:00 AM (RR NOI-1). Construction of the Project would generally involve eight-hour days between the hours of 7:00 AM and 7:00 PM Monday through Friday and between 8:00 PM and 5:00 PM on Saturday, which is consistent with and more restrictive than the City requirement. Through adherence to the limitation of allowable construction times provided in Section 41.40(a), construction-related noise would not exceed the applicable standards, in this case limited to the construction hours limitation of the City of Los Angeles Municipal Code.

The City's construction noise standards do not provide any limits to the noise levels that may be created from construction activities. Even with adherence to the City standards, the resultant construction noise levels may result in a substantial temporary noise increase to the nearby off-site receptors. This is addressed under Threshold 3.12(d) below.

Off-Site Vehicular Noise

The Project would require the removal of 1.37 million cy of sediment from the Project site that would generate up to 240 round trips with 14-cy haul trucks or 180 round trips with 18-cy haul trucks and up to 18 daily trips from workers commuting to the Project site. Vehicle noise is a combination of the noise produced by the engine, exhaust, and tires. The level of traffic noise depends on three primary factors: (1) the volume of traffic, (2) the speed of traffic, and (3) the number of trucks in the flow of traffic. The Project would alter both the volume of traffic and number of trucks on each road segment; however, no changes in vehicle speed are anticipated from implementation of the Project.

The California Department of Health has developed the noise compatibility matrix that details normally acceptable noise levels for different land uses that include 60 dB on the Community Noise Equivalent Level (CNEL) for single-family homes; 65 dB CNEL for motels; and 70 dB CNEL

for schools, hospitals, churches, and parks. However, neither the California Department of Health nor local jurisdictions provide direction for sensitive receptors that already exceed the normally acceptable noise levels for the "Without Project" condition; however, the FTA, which assesses noise and vibration impacts from transit projects, found that when the ambient noise is between 60 and 64 dB CNEL, a noise exposure increase of 2 dB is allowed before a significant impact would occur. When the ambient noise is between 65 and 74 dB CNEL, a noise exposure increase of 1 dB is allowed before a significant impact would occur; when the ambient noise exceeds 74 dB CNEL, any increase in noise exposure would create a significant impact (see Vista 2015b).

The existing roadway noise environment was modeled using the FHWA Traffic Noise Prediction Model—FHWA-RD-77-108 (FHWA Model). The FHWA Model arrives at a predicted noise level through a series of adjustments to the Reference Energy Mean Emission Level (REMEL) to account for the roadway active width (i.e., the distance between the center of the outermost travel lanes on each side of the roadway); the total average daily traffic (ADT) and the percentage of ADT that flows during the day, evening, and night; the travel speed; the vehicle mix on the roadway, which is a percentage of the volume of automobiles, medium trucks, and heavy trucks; the roadway grade; the angle of view of the observer exposed to the roadway; and site conditions ("hard" or "soft" relates to the absorption of the ground, pavement, or landscaping). Only the roadway segments on which the Project may generate additional vehicular trips and had sensitive land uses (i.e., residential, school, parks, libraries, and hospitals) were analyzed. The roadway classifications are based on the City General Plan's Circulation Element. The roadway speeds are based on the posted speed limits. The distance to the nearest sensitive receptor was determined by measuring the distance from the roadway centerline to the nearest residence, school, park, or hospital. Soft site conditions were used to develop noise contours and to analyze noise impacts. Soft sites have an absorptive ground surface (e.g., soft dirt, grass, or scattered bushes and trees). The ADT volumes on the study area roadways were obtained from the Traffic Impact Study prepared for the Project. Since the Traffic Impact Study provided peak hour and mid-day volumes, the ADT was calculated by multiplying the sum of all measured hours (6 hours total) by 4 for a sum of 24 hours. The Project-only passenger car equivalent (PCE) trips provided in the Traffic Impact Study were converted back to non-PCE volumes by dividing the project trips by 2.5.

The Noise Report analyzed Alternatives 1 through 4 conditions consistent with the alternatives assessed in the Traffic Impact Study prepared for the Project. The potential off-site noise impacts have been assessed by calculating the noise level (in CNEL) at the nearest receptor for the Existing scenario to the Existing Plus Alternative scenarios; determining the incremental contribution of the Project's truck traffic to the ambient noise level; and comparing this to the appropriate FTA threshold, which varies dependent on the existing noise level.

For Alternatives 1 through 3, the incremental Project contribution was either 0.3 or 0.4 dBA CNEL for all segments analyzed; for Alternative 4, the incremental Project contribution ranged from 0.2 to 0.5 dBA CNEL. For all routes and all segments analyzed, the Project's noise generation related to truck traffic would not exceed the applicable threshold. Also, the Project would not cause the noise level at any nearby land use to exceed the normally compatible noise standard that did not already exceed the standards for the "Without Project" condition. There would be a less than significant impact related to off-site vehicular noise resulting in an exceedance of standards, and no mitigation is required. Operational noise is addressed under Threshold 3.12(d) below.

b) Would the project result in exposure of persons to or generate excessive groundborne vibration or groundborne noise levels?

Less than Significant Impact. As neither the City of Los Angeles General Plan or Municipal Code provide any vibration standards for construction activities, Caltrans guidance has been

utilized, which defines the threshold of perception from transient sources at 0.25 inch per second ppv. The primary source of vibration during construction would be from the operation of bulldozers and from hoe rams (at the intake canal only). Both large bulldozers and hoe rams would create a vibration level of 0.089 inch per second ppv at 25 feet. Based on typical propagation rates, the vibration level at the nearest off-site receptor would be 0.061 inch per second ppv. The vibration level at the nearest vibration-sensitive off-site receptor would be within the 0.25 inch per second ppv threshold. Therefore, a less than significant vibration impact would occur and no mitigation is required.

The continued operation of the Pacoima Spreading Grounds would not include the operation of any known vibration sources. There would be no impact related to vibration and no mitigation is required.

c) Would the project result in a substantial permanent increase in ambient noise levels in the project vicinity above levels existing without the project?

No Impact. A permanent increase in ambient noise levels would be related to long-term operation of the site. Implementation of the Project would not result in additional site visits from LACFCD staff or other changes in long-term operations. Therefore, the continued operation of the Pacoima Spreading Grounds after Project implementation would result in no change in noise generation related to the facility. There would be no impact and no mitigation is required.

d) Would the project result in a substantial temporary or periodic increase in ambient noise levels in the project vicinity above levels existing without the project?

Less than Significant with Mitigation. Implementation of the Project would result in noise and vibration related to on-site construction equipment and haul truck traffic. The construction parameters and sensitive receptors considered in the following analysis are the same as identified in Section 3.3, Air Quality. As discussed above, construction of the Project would comply and be more restrictive than the City construction hours limits; however, the City does not specify quantitative noise levels as standards for construction activity. The following analysis addresses whether the Project's implementation would result in a substantial ambient noise level increase based on the FTA construction noise criteria thresholds, summarized in Table 3-13.

TABLE 3-13
FTA CONSTRUCTION NOISE CRITERIA

Land Use (Receptor)	Daytime (dBA L_{eq})		Nighttime (dBA L_{eq})	
	1-Hour	8-Hour	1-Hour	8-Hour
Residential	90	80	80	70
Commercial	100	85	100	85
Industrial	100	90	100	90

dBA: A-weighted decibels; L_{eq}: average sound level
Source: Vista 2015b (Appendix E)

Noise generated by construction activities would be a function of the noise generated by construction equipment, equipment location, sensitivity of nearby land uses, and the timing and duration of the construction activities. The noise generated by on-site construction of the Project have been analyzed through use of the FHWA's Roadway Construction Noise Model (RCNM). Although the Project is not comprised of roadway construction, the FHWA compiled noise measurement data regarding the noise-generating characteristics of several different types of

construction equipment used during the Central Artery/Tunnel project in Boston and, as such, the model is applicable to all construction types.

For each phase of construction, the nearest piece of equipment was placed at the shortest distance of the proposed activity on the site to the nearest home, and each subsequent piece of equipment was placed an additional 50 feet away in order to calculate the combined noise impacts of the simultaneous operation of all listed equipment with the potential to operate during Project construction. It is noted the that the noise model incorporates several additional conservative assumptions, including (1) hard terrain on the site, whereas the site is comprised of primarily soft terrain (i.e., dirt), which provides relatively lower noise levels; (2) direct line of sight between the noise source and receptor (i.e., no barriers); and (3) stationary operation of each piece of equipment for a period of one hour, with the nearest equipment being a dozer. In reality, the on-site construction activity would not be stationary for an hour. Also, the majority of the spreading basin excavation and channel replacement would occur at a further distance than the nearest point on the site and be below the grade of the surrounding receptors (e.g., at a lower level), thereby providing noise reduction compared to the noise modeling.

Construction activities at the spreading basins would consist of the use of bulldozers and excavators that would be constantly moving and would result in activities occurring near nearby sensitive receptor in less than one hour intervals; therefore, the one-hour construction noise threshold was utilized for the receptors next to the spreading basins (i.e., residential 90 dBA L_{eq} for 1 hour during the daytime). The demolition activities at the headworks would require the use of excavators with mounted impact hammers or hoe rams to break up the existing concrete, and this demolition activity would have the potential of occurring in the same general proximity for up to an eight-hour duration; therefore, the eight-hour construction noise threshold was utilized for the receptors next to the headworks (i.e., residential 80 dBA L_{eq} for eight hours during the daytime). It is noted that, for purposes of this analysis, the adjacent park (Devonwood) was assessed with the residential FTA threshold as well. The modeled worst-case (i.e., maximum) noise levels and a comparison to the relevant threshold are summarized in Table 3-14, Maximum Construction Noise Levels.

TABLE 3-14
MAXIMUM CONSTRUCTION NOISE LEVELS

Sensitive Receptor	Distance from Project site to Receptor (feet)	Exterior Construction Noise Level at Receptor (dBA L_{eq})	Threshold (dBA L_{eq})	Exceed Threshold?
Devonwood Park	30	83	90[a]	No
Nearest home and the church adjacent to the spreading basins	35	82	90[a]	No
Nearest home to the headworks	40	86	80[b]	**Yes**

dBA: A-weighted decibels; L_{eq}: average sound level

[a] One-hour threshold based on construction activities in the spreading basins.
[a] Eight-hour threshold based on construction activities in headworks.

Source: Vista 2015b (Appendix E)

As shown, the highest noise levels and the noise generation that would exceed the FTA threshold would be expected during demolition activities at the homes near the headworks facility. This is a significant impact and requires mitigation. MM NOI-1 requires installation of an eight-foot-high sound wall constructed of minimum ½-inch plywood or Oriented Strand Board (OSB) and extending a minimum of 100 feet past the extent of the demolition activities. The sound wall shall

be installed prior to initiation of demolition activities and shall remain until completion of all headworks improvements.

The eight-foot height of the sound wall is specified because that is the height required to break the line-of-sight between the construction equipment and a person standing in the backyard of a nearby home. According to Caltrans' *Technical Noise Supplement*, a sound wall that is tall enough to break the line-of-sight between the proposed equipment and receiver would provide approximately seven dB of noise reduction. This would result in a maximum noise level of 79 dBA L_{eq} at the nearest homes to the headworks during demolition activity and would be within the 8-hour, 80 dBA L_{eq} standard. It is noted that most of the demolition work would occur with the equipment located inside the intake canal, located as much as 20 feet below the grade of the surrounding receptors. The additional grade difference would provide additional sound attenuation to the maximum noise level of 79 dBA L_{eq}, the at-grade estimated noise level with mitigation. Therefore, with implementation of MM NOI-1, a less than significant construction noise impact would occur from Project implementation. Operational noise is addressed under Threshold 3.12(d) above.

e) For a project located within an airport land use plan or, where such a plan has not been adopted, within two miles of a public airport or public use airport, would the project expose people residing or working in the project area to excessive noise levels?

f) For a project within the vicinity of a private airstrip, would the project expose people residing or working in the project area to excessive noise levels?

Less than Significant Impact. The nearest airport is Whiteman Airport, located approximately 1.5 mile east of the Project site. The site is located outside the 65 dBA CNEL noise contours of this or any other airport. Additionally, observation of the existing noise sources in the area during the noise measurements determined that air traffic creates minimal noise in the Project vicinity. Finally, the Project would not introduce any new sensitive receptors to the site or surrounding area. Impacts would be less than significant and no mitigation is required.

MITIGATION MEASURES

MM NOI-1 The County of Los Angeles Flood Control District shall construct, or have constructed as part of the Contractor specifications, an eight-foot-high temporary sound wall along the shared property line with the nearby homes located northwest of the headworks improvements area. The sound wall shall extend at least 100 feet past the extent of the intake channel demolition activities and shall be constructed of minimum ½-inch plywood or Oriented Strand Board (OSB). The sound wall shall be installed prior to the start of demolition activities and shall remain until the completion of the headworks improvements.

3.13 POPULATION AND HOUSING	**Potentially Significant Impact**	**Less than Significant with Mitigation**	**Less than Significant Impact**	**No Impact**
Would the project:				
a) Induce substantial population growth in an area, either directly (for example, by proposing new homes and businesses) or indirectly (for example, through the extension of roads or other infrastructure)?	☐	☐	☐	☒
b) Displace substantial numbers of existing housing, necessitating the construction of replacement housing elsewhere?	☐	☐	☐	☒
c) Displace substantial numbers of people, necessitating the construction of replacement housing elsewhere?	☐	☐	☐	☒

IMPACT ANALYSIS

Regulatory Requirements

None required.

Impact Discussion

a) Would the project induce substantial population growth in an area, either directly (for example, by proposing new homes and businesses) or indirectly (for example, through the extension of roads or other infrastructure)?

No Impact. The Project site does not include residential land uses, nor would the Project include habitable structures or other land uses that could directly induce population growth. Also, the Project does not involve the extension of new infrastructure that could serve future populations. The Pacoima Spreading Grounds has operated since the 1930s and the indirect population growth associated with control of seasonal flooding in the Los Angeles area has already occurred. The Project would increase the recharge capacity of the facility; however, the water conservation achieved with the Project is intended to serve the anticipated water demands of the LADWP.

The Project would bring in LACDPW staff, contractors, and other authorized personnel to the Project site for the duration of the construction period. The local population (i.e., in Los Angeles County) could provide adequate skilled workers to satisfy the construction-related positions, and there would be no need to relocate workers from other areas. Thus, no indirect change in the population and housing is expected with the presence of construction crews on site.

b) Would the project displace substantial numbers of existing housing, necessitating the construction of replacement housing elsewhere?

c) Would the project displace substantial numbers of people, necessitating the construction of replacement housing elsewhere?

No Impact. The Project site does not include residential homes or land uses. Therefore, the Project would not displace housing or an existing population on the site. There would be no impact.

MITIGATION MEASURES

There would be no impacts related to population and housing; therefore, no mitigation measures are necessary.

3.14 PUBLIC SERVICES	**Potentially Significant Impact**	**Less than Significant with Mitigation**	**Less than Significant Impact**	**No Impact**
Would the project:				
a) Result in substantial adverse physical impacts associated with the provision of new or physically altered government facilities, need for new or physically altered government facilities, the construction of which could cause significant environmental impacts, in order to maintain acceptable service ratios, response times, or other performance objectives for any of the public services:				
Fire protection?	☐	☐	☐	☒
Police protection?	☐	☐	☐	☒
Schools?	☐	☐	☐	☒
Parks?	☐	☐	☐	☒
Other public facilities?	☐	☐	☐	☒

IMPACT ANALYSIS

Regulatory Requirements

None required.

Impact Discussion

a) Would the project result in substantial adverse physical impacts associated with the provision of new or physically altered government facilities, need for new or physically altered government facilities, the construction of which could cause significant environmental impacts, in order to maintain acceptable service ratios, response times, or other performance objectives for any of the public services:

- **Fire protection?**
- **Police protection?**
- **Schools?**
- **Parks?**
- **Other public facilities?**

No Impact. As discussed above in Section 3.13, Population and Housing, the Project would not involve the construction or operation of structures or infrastructure improvements that could directly or indirectly induce population growth that would generate demand for additional fire protection, law enforcement, schools, parks, libraries, or other public services.

Temporary Project-related activities, such as the presence of construction equipment on the Project site, may provide increased opportunities for theft. The construction areas would be fenced and the LACFCD's Contractor would be required to secure building materials and construction equipment to prevent theft and vandalism from occurring at the Project site

during construction. Additionally, there would be no unusually valuable or out of the ordinary construction-related equipment or materials associated with Project implementation that would generate an unusual attraction for theft. There would be no new demands for police protection services that could result in new or physically altered police facilities.

The Project would not generate demand for any public service such that new or expanded physical facilities are required, whose construction could result in an environmental impact. There would be no impact.

MITIGATION MEASURES

There would be no impacts related to public services; therefore no mitigation measures are required.

3.15 RECREATION	**Potentially Significant Impact**	**Less than Significant with Mitigation**	**Less than Significant Impact**	**No Impact**
Would/does the project:				
a) Increase the use of existing neighborhood and regional parks or other recreational facilities such that substantial physical deterioration of the facility would occur or be accelerated?	☐	☐	☐	☒
b) Include recreational facilities or require the construction or expansion of recreational facilities which might have an adverse physical effect on the environment?	☐	☐	☐	☒

IMPACT ANALYSIS

Regulatory Requirements

None required.

Impact Discussion

a) Would the project increase the use of existing neighborhood and regional parks or other recreational facilities such that substantial physical deterioration of the facility would occur or be accelerated?

b) Does the project include recreational facilities or require the construction or expansion of recreational facilities which might have an adverse physical effect on the environment?

No Impact. As discussed above in Section 3.13, Population and Housing, the Project would not involve the construction or operation of structures or infrastructure improvements that could directly or indirectly induce population growth, including during construction that would generate demand for additional recreational facilities. The Project would not increase the use of existing park or recreational facilities such that substantial physical deterioration of the facility would occur or be accelerated. The Project would continue to operate as a flood control and water conservation facility. The paved access road located along the west side of Pacoima Wash and outside the fence surrounding the Pacoima Spreading Grounds, between Devonshire Street and Filmore Street, would be opened to the public for use as a hiking and riding trail. There would be no impact.

MITIGATION MEASURES

There would be no impacts related to recreation; therefore, no mitigation measures are required.

3.16 TRANSPORTATION/TRAFFIC	**Potentially Significant Impact**	**Less Than Significant with Mitigation**	**Less than Significant Impact**	**No Impact**
Would the project:				
a) Conflict with an applicable plan, ordinance or policy establishing measures of effectiveness for the performance of the circulation system, taking into account all modes of transportation including mass transit and non-motorized travel and relevant components of the circulation system. Including but not limited to intersections, streets, highways and freeways, pedestrian and bicycle paths, and mass transit?	☐	☒	☐	☐
b) Conflict with an applicable congestion management program, including, but not limited to level of service standards and travel demand established by the county congestion management agency for designated roads or highways?	☐	☐	☐	☒
c) Result in a change in air traffic patterns, including either an increase in traffic levels or change in location that results in substantial safety risks?	☐	☐	☐	☒
d) Substantially increase hazards due to a design feature (e.g., sharp curves or dangerous intersections) or incompatible uses (e.g., farm equipment)?	☐	☐	☐	☒
e) Result in inadequate emergency access?	☐	☐	☒	☐
f) Conflict with adopted policies, plans, or programs regarding public transit, bicycle, or pedestrian facilities, or otherwise decrease the performance or safety of such facilities?	☐	☐	☐	☒

Information in this section is derived from the *Traffic Impact Study, Pacoima Spreading Grounds Improvement Project, County of Los Angeles, California* (TIS) dated August 2015 and prepared by Linscott, Law & Greenspan Engineers (LLG 2015). This report is provided in its entirety in Appendix F.

IMPACT ANALYSIS

Methods

The TIS follows the City of Los Angeles Department of Transportation's (LADOT's) traffic study guidelines and is consistent with the Los Angeles County Congestion Management Program traffic impact assessment guidelines. It is noted that the LADOT does not require analysis of construction-related traffic or for non-signalized intersections. The LADOT guidelines are meant to reflect land use development, with changes in land use and permanent traffic generation. However, due to the length of Project construction and the number of daily haul truck trips, the LACFCD directed the preparation of a traffic analysis based on LADOT guidelines. As such, analyzing the construction-related haul truck traffic as a permanent land use development is a conservative approach and is intended to ensure all potential traffic impacts are identified.

As discussed in Section 2.4.1, Project Components, excavated materials would be transported to one of the following Vulcan-owned sediment disposal sites: Cal Mat Pit, Boulevard Pit, and

Sheldon Pit. Based on preliminary traffic analyses, the haul trucks would travel to the pits with a generalized distribution of 60 percent via I-5 (Haul Route A) and 40 percent via San Fernando Road (Haul Route B). Portions of these routes overlap near the Project site and near the Vulcan pits. Wherever feasible, concurrent use of the three sites would be scheduled. However, there may be times when this is not possible. Therefore, to provide an analysis of all sediment disposal contingencies as they relate to haul truck traffic, the TIS assessed impacts for the following four scenarios:

- Alternative 1: Concurrent Use of All Three Sediment Disposal Sites
- Alternative 2: Use of the Boulevard Pit Only
- Alternative 3: Use of the Sheldon Pit Only
- Alternative 4: Use of the Cal Mat Pit Only

It is noted these are not "alternatives" as defined in Section 15126.6 of the State CEQA Guidelines. Further details of the TIS methodology is presented below in the impact analysis.

Traffic Study Area

The TIS "study area" is comprised of those locations that have the greatest potential to experience traffic impacts as a result of the Project. Based on traffic engineering practice and consultation with the LACFCD, the LACDPW's Traffic and Lighting Division, and LADOT, a total of 24 study intersections and 3 mainline freeway segments have been identified. All intersections are in the City of Los Angeles, and the I-5 freeway ramp intersections share jurisdiction with Caltrans. The 24 study intersections are depicted on Exhibit 3-6, Traffic Study Intersections, and are listed below:

1. Arleta Avenue/Devonshire Street (City of Los Angeles)
2. Arleta Avenue/Paxton Street (City of Los Angeles)
3. I-5 Freeway Southbound (SB) Ramps at Sharp Avenue/Paxton Street (City of Los Angeles/Caltrans)
4. I-5 Freeway Northbound (NB) Ramps at Remick Avenue/Paxton Street (City of Los Angeles/ Caltrans)
5. Laurel Canyon Boulevard/Branford Street (City of Los Angeles)
6. San Fernando Road/Branford Street (City of Los Angeles)
7. Laurel Canyon Boulevard/I-5 Freeway NB Off-Ramp at Jerome Street (City of Los Angeles/Caltrans)
8. Laurel Canyon Boulevard/Sheldon Street (City of Los Angeles)
9. Laurel Canyon Boulevard/I-5 Freeway SB Ramps (City of Los Angeles/Caltrans)
10. I-5 Freeway NB On-Ramp at Rincon Avenue/Sheldon Street (City of Los Angeles/ Caltrans)
11. Haddon Avenue/Sheldon Street (City of Los Angeles)
12. Telfair Avenue/Sheldon Street (City of Los Angeles)
13. San Fernando Road/Sheldon Street (City of Los Angeles)

Source: Linscott, Law & Greenspan, Engineers 2015

Traffic Study Intersections

Exhibit 3-6

Pacoima Spreading Grounds Improvement Project

BonTerra PSOMAS

(11/20/2015 JAZ) H:\Projects\CoLADPW (DPW)\J272\Graphics\MND\ex3-6_TrafficStudyIntersections.pdf

D:\Projects\COLADPW\J272\Graphics\MND\ex_TrafficStudyIntersections.ai

14. Glenoaks Boulevard/Sheldon Street (City of Los Angeles)
15. Laurel Canyon Boulevard/Paxton Street (City of Los Angeles)
16. Haddon Avenue/Paxton Street (City of Los Angeles)
17. Kewen Avenue/Paxton Street (City of Los Angeles)
18. Telfair Avenue/Paxton Street (City of Los Angeles)
19. San Fernando Road/Paxton Street (City of Los Angeles)
20. San Fernando Road/SR-118 Freeway Eastbound (EB) Ramps (City of Los Angeles/Caltrans)
21. San Fernando Road/Van Nuys Boulevard (City of Los Angeles)
22. San Fernando Road/Pierce Street (City of Los Angeles)
23. San Fernando Road/Terra Bella Street (City of Los Angeles)
24. San Fernando Road/Osborne Street (City of Los Angeles)

Sixteen of the 24 study intersections are currently controlled by traffic signals, while the five intersections with the I-5 Freeway at Paxton Street (northbound and southbound ramps), Laurel Canyon Boulevard (northbound off-ramp and southbound ramps), and Sheldon Street (northbound on-ramp) are currently controlled by stop signs facing the northbound and southbound off-ramp approaches. Additionally, the Haddon Avenue/Paxton Street and Kewen Avenue/Paxton Street intersections are currently controlled by stop signs facing the respective Haddon Avenue and Kewen Avenue approaches while the Arleta Avenue/Paxton Street intersection is currently controlled by all-way stop signs.

The following three study mainline freeway segment locations are under Caltrans jurisdiction were also identified for analysis:

1. I-5 Freeway south of Paxton Street
2. I-5 Freeway north of Osborne Street
3. I-5 Freeway south of SR-170.

Manual vehicle classification counts of turning movements (i.e., traffic counts) were conducted at each of the 24 study intersections during the weekday morning (7:00 AM to 10:00 AM), mid-day (noon to 2:00 PM), and afternoon (3:00 PM to 6:00 PM) commuter periods to determine the peak hour traffic volumes. The traffic counts were conducted at 14 study intersections in January 2014 and 10 additional study intersections in March 2015; the 2015 counts were timed to ensure schools were in session. The 2014 counts were increased by 1.5 percent to reflect assumed ambient growth for 2015 conditions.

The traffic counts categorized the following vehicle types: passenger cars, buses, single unit trucks, and semi-tractor trailer trucks. The traffic volumes shown in the figures and used for analysis purposes reflect appropriate adjustments, called the passenger car equivalent (PCE), to account for the presence of truck traffic that travels in the study area. A PCE of 1.0 was used for passenger cars; a PCE of 2.0 was used for buses, single unit trucks, 3-axle trucks, and 4-axle semi-tractor trailer trucks; and a PCE of 3.0 was used for 5-axle or more semi-tractor trailer trucks.

During the Initial Study review process, the potential traffic impacts at the intersections of Telfair Avenue/Paxton Street, San Fernando Road/Paxton Street, and San Fernando Road/Van Nuys

Boulevard along proposed Haul Route B and the Woodman Avenue/Devonshire Street intersection were requested. Because haul trucks associated with the Project are not expected to traverse through the Woodman Avenue/Devonshire Street intersection, analysis of the Woodman Avenue/Devonshire Street intersection is not considered necessary. The remaining three requested intersections are among the ten additional intersections included in the TIS and have been evaluated pursuant to City of Los Angeles traffic analysis methodologies. Based on application of the City of Los Angeles traffic impact criteria, the results of the analysis of these intersections is presented below.

Regulatory Requirements

RR TRA-1 The County requires the implementation of temporary traffic control measures in accordance with the *Standard Specifications for Public Works Construction* (Greenbook), which contains standards for traffic and access (i.e., maintenance of access, traffic control, and notification of emergency personnel). The Contractor shall provide temporary traffic control in accordance with the Greenbook during construction activities.

Impact Discussion

a) Would the project conflict with an applicable plan, ordinance or policy establishing measures of effectiveness for the performance of the circulation system, taking into account all modes of transportation including mass transit and non-motorized travel and relevant components of the circulation system, including but not limited to intersections, streets, highways and freeways, pedestrian and bicycle paths, and mass transit?

Less than Significant with Mitigation. The following analyzes potential impacts to the study intersections. Impacts related to non-motorized travel (i.e., mass transit) are discussed below under Threshold 3.16(f).

Impact Criteria and Thresholds

The 24 study intersections are under either sole City jurisdiction or joint City/Caltrans jurisdiction. As such, the study intersections were evaluated using the Critical Movement Analysis (CMA) method of analysis that determines Volume-to-Capacity (V/C) ratios on a critical lane basis. The overall intersection V/C ratio is subsequently assigned a Level of Service (LOS) value to describe intersection operations. Level of Service varies from LOS A (free flow) to LOS F (jammed condition). In addition, to analyze the potential vehicle queuing impacts at the I-5 Freeway On- and Off-Ramp intersections (which are under joint City of Los Angeles and Caltrans jurisdiction), the Highway Capacity Manual (HCM) method for unsignalized intersections has been utilized.

The relative impact of the added traffic volumes to be generated by the Project during the weekday AM peak hour, mid-day, and PM peak hour was evaluated based on analysis of existing and future operating conditions at study intersections both Without and With the Project. The capacity analysis procedures were utilized to evaluate the existing and future V/C relationships and service level characteristics at each study intersection.

The significance of the potential impacts of Project-generated traffic at each study intersection was identified in the LADOT guidelines. A significant transportation impact is determined based on the City of Los Angeles' Sliding Scale Method criteria, presented in Table 3-15, City of Los Angeles Intersection Impact Criteria.

TABLE 3-15
CITY OF LOS ANGELES INTERSECTION IMPACT CRITERIA

Final V/C	Level of Service	Project-Related Increase in V/C
> 0.701–0.800	C	equal to or greater than 0.040
> 0.801–0.900	D	equal to or greater than 0.020
> 0.901–1.000	E	equal to or greater than 0.010
Greater than 1.000	F	equal to or greater than 0.010

V/C: volume to capacity ratio
Source: LLG 2015.

The City's Sliding Scale Method requires mitigation of Project traffic impacts whenever traffic generated by the proposed development causes an increase in the analyzed intersection V/C ratio by an amount equal to or greater than the values shown in Table 3-15 above.

Project Trip Generation

Traffic generation is expressed in vehicle trip ends, defined as one-way vehicular movements, either entering or exiting the generating land use. The Institute of Transportation Engineers' *Trip Generation Manual* does not contain trip rates for the proposed, construction-related hauling operation. Therefore, the truck trip generation forecast was derived based on the following factors: (1) hours of hauling operations, (2) capacity of haul trucks (14 cy or 18 cy per truck); (3) application of PCE factors, and (4) amount of anticipated soil export. To account for the effect that trucks have on overall intersection operations, a PCE factor of 2.5 or 3.0 was incorporated into the traffic analysis. Specifically, it is assumed that a single 14-cy haul truck has the same overall effect on traffic operations as 2.5 passenger cars and a single 18-cy haul truck has the same overall effect on traffic operations as 3.0 passenger cars. This assumption is conservative and accounts for the heavy vehicle type and slower speeds of these vehicles when fully loaded. Additionally, based on coordination with the LACFCD, the trips associated with employee and construction worker trips were estimated. Table 3-16, Project Trip Generation, summarizes the anticipated trip generation for Project implementation used in the TIS.

TABLE 3-16
PROJECT TRIP GENERATION[a]

Land Use	Daily Trip Ends[b] Volumes	AM Peak Hour Volumes[b]			Midday Peak Hour Volumes[b]			PM Peak Hour Volumes[b]		
		In	Out	Total	In	Out	Total	In	Out	Total
[A] Employees at Pacoima Spreading Grounds	18	2	2	4	2	2	4	2	2	4
[B] 14-cy Truck Trips (unadjusted)[c]	480	20	20	40	20	20	40	20	20	40
[C] 18-cy Truck Trips (unadjusted)[d]	360	15	15	30	15	15	30	15	15	30
[D] PCE Adjusted 14-cy Truck Trips[e]	1,200	50	50	100	50	50	100	50	50	100
[E] PCE Adjusted 18-cy Truck Trips[f]	1,080	45	45	90	45	45	90	45	45	90
Net Increase with 14-cy Trucks ([A]+[D])	**1,218**	**52**	**52**	**104**	**52**	**52**	**104**	**52**	**52**	**104**
Net Increase with 18-cy Trucks ([A]+[E])	**1,098**	**47**	**47**	**94**	**47**	**47**	**94**	**47**	**47**	**94**

cy: cubic yards; PCE: passenger car equivalents

[a] Source: Based on coordination with Los Angeles County representatives and BonTerra Psomas.
The number of truck hauling hours was determined based on: 69 hours/week x 52 weeks/year - 120 hours holiday/year = 3,468 hours/year x 1.5 years = 5,202 total hours.

[b] Trips are one-way traffic movements, entering or leaving.

[c] Peak hour and daily truck trips were derived based on the following, using 14-cy capacity per haul truck:

- Peak Hour Truck Trips = 1,370,000 cy of sediment to be exported ÷ 5,202 total working hours ÷ 14 cy per truck = 19 one-way truck trips. Thus, for analysis purposes 20 inbound truck trips + 20 outbound truck trips = 40 total truck trips per hour have been assumed.
- Daily Truck Trips = 40 Peak Hour Truck Trips x 12 hours = 480 total truck trips per day (i.e., 240 inbound trips + 240 outbound trips).

[d] Peak hour and daily truck trips were derived based on the following, using 18-cy capacity per haul truck:

- Peak Hour Truck Trips = 1,370,000 cy of sediment to be exported ÷ 5,202 total working hours ÷ 18 cy per truck = 15 one-way truck trips. Thus, for analysis purposes 15 inbound truck trips + 15 outbound truck trips = 30 total truck trips per hour have been assumed.
- Daily Truck Trips = 30 Peak Hour Truck Trips x 12 hours = 360 total truck trips per day (i.e., 180 inbound trips + 180 outbound trips).

[e] A PCE factor of 2.5 was employed for analysis purposes. This accounts for the assumption that a single 14-cy capacity haul truck has the same overall effect on intersection traffic operations as 2.5 passenger cars.

[f] A PCE factor of 3.0 was employed for analysis purposes. This accounts for the assumption that a single 18-cy capacity haul truck has the same overall effect on intersection traffic operations as 3.0 passenger cars.

Source: LLG 2015 (Appendix F)

As shown in Table 3-16, using haul trucks with 14-cy capacity per truck, the Project is expected to generate 104 PCE-adjusted vehicle trips (52 inbound trips and 52 outbound trips) during the weekday AM peak hour, mid-day peak hour, and PM peak hour and 1,218 PCE-adjusted daily trip ends during a typical weekday (609 inbound trips and 609 outbound trips). Using haul trucks with an 18-cy capacity per truck, the Project is expected to generate 94 PCE-adjusted vehicle trips (47 inbound trips and 47 outbound trips) during the weekday AM peak hour, mid-day peak hour, and PM peak hour and 1,098 PCE-adjusted daily trip ends during a typical weekday (549 inbound trips and 549 outbound trips). By comparison, using haul trucks with 14-cy capacity per truck will provide a slightly higher, more conservative assessment of potential project trip generation. Therefore, the TIS utilizes the Project trip generation forecasts based on the use of 14-cy haul trucks so as to provide a conservative assessment of potential Project-related traffic impacts

As discussed in Section 2.4.1, Project Components, construction of the Project would also generate trips associated with sediment disposal, demolition waste disposal (approximately 77 trips total for intake canal demolition), and worker trips (18 trips per day). There would be a finite number of trips associated with equipment delivery at the initiation of the Project. The TIS focuses on the effect of the sediment haul truck trips due to the volume and frequency of this traffic as well as the daily worker trips; the other Project-related trips during construction are negligible in comparison to the daily haul truck and worker trips.

Intersection Levels of Service Analysis

Consistent with LADOT guidelines, the TIS analyzed the following scenarios: (1) Existing Conditions, (2) Existing with Project, (3) Cumulative without Project, (4) Cumulative with Project, and (5) Future with Project and Mitigation (if necessary).

The TIS determined that any combination of the use of only two of the three disposal sites (e.g., concurrent use of only the Boulevard and Sheldon Pits) would have the same or less potential short-term traffic impacts than those identified under either Alternative 2 (Boulevard Pit only) or Alternative 3 (Sheldon Pit only). Therefore, since all combinations of two of the three disposal sites would have the same or less traffic impacts than those identified under Alternative 4 (i.e., the only Alternative with a significant temporary traffic impact), all potential construction-related traffic impacts are encompassed by Alternatives 1 through 4.

For the analysis scenarios for the future condition, a forecast of on-street traffic conditions was prepared by incorporating the potential trips associated with other known development projects (i.e., related projects) in the area. Related projects were researched by LLG based on information on file at both the County of Los Angeles Department of Regional Planning and the City of Los Angeles Departments of Planning and Transportation, as well as consultation with the LACFCD to determine any flood-control related projects with overlapping haul routes and schedules. As shown in Table 3-17, Related Projects, the Lopez Spreading Grounds Improvement Project is included. Other spreading ground improvement and sediment removal projects have been considered but are not applicable as related projects because they either (1) do not have any haul route overlaps with the Project, (2) are forecasted to begin after the Project's completion, or 3) they propose to use conveyor belts only for the transport of materials (i.e., no trucks). The related projects considered in the TIS are summarized below in Table 3-17.

The other aspect of assessing the future conditions is ambient growth to account for area-wide regional growth. Horizon year background traffic growth estimates have been calculated using an ambient traffic growth factor. The existing traffic volumes were increased at an annual rate of 1.5 percent to the year 2018 (i.e., the anticipated year of Project completion), based on the general traffic growth factors provided in the *2010 Congestion Management Program for Los Angeles County* (the "CMP manual") and determined in consultation with LADOT staff. It is noted that, based on review of the general traffic growth factors provided in the CMP manual for the Project area (i.e., Regional Statistical Area No. 14 – San Fernando, Granada Hills, Sylmar, Tujunga), it is anticipated that the existing traffic volumes are expected to increase at an annual rate of approximately 0.49 percent per year between the years 2010 and 2018. Further, it is noted that the CMP manual's traffic growth rate is intended to anticipate future traffic generated by development projects in the Project vicinity. Therefore, the application of a 1.5 percent annual growth factor plus traffic by known related projects provides is conservative, worst-case forecast of future traffic volumes at study intersections.

TABLE 3-17
RELATED PROJECTS[a]

Project Status	Project Name/Number Address/Location	Land Use Data		Daily Trip Ends[b] Volumes	AM Peak Hour Volumes[b]			Midday Peak Hour Volumes[b]			PM Peak Hour Volumes[b]		
		Land-Use	Size		In	Out	Total	In	Out	Total	In	Out	Total
Proposed	Community Recycling & Resource Recovery 9189 De Garmo Ave	Industrial	2,200 gsf	1,534	135	130	265	162	147	309	162	147	309
Proposed	Sunland Commercial 8652 Sunland Blvd	Retail	17,000 gsf	760	12	8	20	33	36	69	33	36	69
		Office	7,000 gsf	173	20	3	23	15	72	87	15	72	87
Proposed	Sun Valley Care Ministries 9000 Sunland Blvd	School	140 Seats	1,582	89	48	137	74	103	177	74	103	177
		School	50 Seats										
		Retail	15,040 gsf										
		Office	17,040 gsf										
		Single-Family Residential	2 du										
		(Minus Existing School)	(40) Seats										
		(Minus Existing Single-Family)	(2) du										
		(Minus Existing Retail)	(3,632) gsf										
		(Minus Existing Office)	(1,604) gsf										
Proposed	Hotel Pacoima 13535 Van Nuys Blvd	Hotel	44 Rooms	359	15	10	25	14	12	26	14	12	26
Proposed	Discovery Charter Preparatory School 9989 Laurel Canyon Blvd	Private High School	400 Students	1,680	221	147	368	Nom.	Nom.	Nom.	64	104	168
Proposed	Fenton Charter Elementary School 11351 Dronfield Ave	School Expansion	300 Students	1,800	150	125	275	Nom.	Nom.	Nom.	85	95	180
Proposed	11038 Peoria St	TV and Commercial Stages	[a]	914	125	21	146	15	60	75	15	60	75
Proposed	St. Ephraim Cathedral[c, d, e] 10635 N Woodman Ave	Church	45,998 sf	419	16	10	26	12	13	25	12	13	25
		Multi-purpose building											
		Fellowship Hall/Administration											
		Senior Housing	28 du	96	2	4	6	4	3	7	4	3	7
		Bishops Residences	2 du	19	1	1	2	1	1	2	1	1	2

TABLE 3-17
RELATED PROJECTS[a]

Project Status	Project Name/Number Address/Location	Land Use Data		Daily Trip Ends[b] Volumes	AM Peak Hour Volumes[b]			Midday Peak Hour Volumes[b]			PM Peak Hour Volumes[b]		
		Land-Use	Size		In	Out	Total	In	Out	Total	In	Out	Total
Proposed	Lopez Spreading Grounds Improvement Project[f]	Sediment Removal	240,000 cy	810	34	34	68	34	34	68	34	34	68
			TOTAL	**10,146**	**820**	**541**	**1,361**	**364**	**481**	**845**	**513**	**680**	**1,193**

gsf: gross square feet; sf: square feet; du: dwelling units; cy: cubic yards

[a] Source: City of Los Angeles Department of Transportation (LADOT), except as noted below. The peak hour traffic volumes were forecasted based on trip data provided by LADOT and by applying trip rates as provided in the ITE's 2012 *Trip Generation Manual* (9th Edition). For those related projects that LADOT provided trip data, the peak hour directional distribution data provided in the ITE *Trip Generation Manual* were utilized.
[b] Trips are one-way traffic movements, entering or leaving.
[c] ITE Land Use Code 560 (Church) trip generation average rates.
[d] ITE Land Use Code 252 (Senior Adult Housing-Attached) trip generation average rates.
[e] ITE Land Use Code 210 (Single Family Detached Housing) trip generation average rates.
[f] Based on information provided by Los Angeles County, 135 truck trips per day are anticipated. A passenger car equivalency (PCE) factor of 3.0 was employed for analysis purposes.

Source: LLG 2015 (Appendix F)

Existing with Project

In order to determine the operating conditions of the street system under Existing with Project conditions, traffic to be generated by the Project was added to the existing traffic conditions. The existing traffic conditions are shown in Column (1) of Tables 3-18 through 3-21 for Alternatives 1 through 4, respectively. As shown, all study intersections are presently operating at LOS D or better during the weekday AM, mid-day, and PM peak hours under existing conditions.

The Existing with Project traffic conditions are shown in Column (2) of Tables 3-18 through 3-21. As shown in Table 3-21, the Project would result in a significant impact at the intersection of Glenoaks Boulevard and Sheldon Street in the AM peak hour under Alternative 4 (Use of Cal-Mat Pit Only). MM TRA-1 commits the LACFCD and its Contractor to prohibiting the use of direct haul trucks to the Cal-Mat Pit exclusively. With implementation of MM TRA-1, there would be a less than significant impact at this intersection. Because this mitigation does not involve an intersection improvement, but an elimination of this traffic pattern, the traffic conditions with mitigation are reflected in Alternative Routes 1, 2, and 3 as shown in Tables 3-18 through 3-21.

There would be incremental, but not significant, changes in V/C ratios at the Glenoaks Boulevard/ Sheldon Street intersection in the midday and PM peak hours, and at the remaining 23 study intersections during the weekday AM, mid-day, and PM peak hours for Alternative 1, 2, 3, and 4.

Cumulative without Project

The Cumulative without Project conditions (2018) result from the addition of traffic generated by completion and occupancy of the related projects (Table 3-17) and a 1.5 percent ambient growth rate, but without the addition of Project traffic. This is referred to as the cumulative baseline.

As shown in Column (3) of Tables 3-18 through 3-21, 23 of the 24 study intersections are expected to operate at LOS D or better during the weekday AM, mid-day, and PM peak hours under the Cumulative without Project conditions. The Laurel Canyon Boulevard/Paxton Street intersection is expected to operate at LOS E under the Cumulative without Project conditions in the PM peak hour.

Cumulative with Project

The Cumulative with Project conditions (2018) with the Project are shown in Column [4] of Tables 3-18 through 3-21. As shown, the same as the Existing with Project conditions above, the Project would result in a significant impact at the Glenoaks Boulevard/Sheldon Street intersection in the AM peak hour under Alternative 4 (Use of Cal-Mat Pit Only). With implementation of MM TRA-1, there would be a less than significant impact at this intersection. There would be incremental, but not significant, changes in V/C ratios at the Glenoaks Boulevard/Sheldon Street intersection in the midday and PM peak hours, and at the remaining 23 study intersections during the weekday AM, mid-day, and PM peak hours for Alternatives 1, 2, 3, and 4.

TABLE 3-18
SUMMARY OF INTERSECTION CAPACITY ANALYSIS – ALTERNATIVE 1
(CONCURRENT USE OF ALL THREE DISPOSAL SITES)

			(1)		(2)				(3)		(4)			
			Existing (2015)		Existing with Project (2015)		Change V/C	Signif. Impact?	Cumulative without Project (2018)		Cumulative with Project (2018)		Change V/C	Signif. Impact?
No.	Intersection	Peak Hour	V/C	LOS	V/C	LOS	[(2) - (1)]		V/C	LOS	V/C	LOS	[(4) - (3)]	
1	Arleta Ave/ Devonshire St	AM	0.563	A	0.611	B	0.048	No	0.596	A	0.642	B	0.046	No
		Mid-Day	0.232	A	0.268	A	0.036	No	0.248	A	0.283	A	0.035	No
		PM	0.497	A	0.539	A	0.042	No	0.525	A	0.565	A	0.040	No
2	Arleta Ave/ Paxton St[a]	AM	0.616	B	0.661	B	0.045	No	0.646	B	0.691	B	0.045	No
		Mid-Day	0.327	A	0.372	A	0.045	No	0.344	A	0.389	A	0.045	No
		PM	0.596	A	0.641	B	0.045	No	0.625	B	0.670	B	0.045	No
3	I-5 Freeway SB Ramps at Sharp Ave/ Paxton St	AM	0.654	B	0.688	B	0.034	No	0.687	B	0.720	C	0.033	No
		Mid-Day	0.307	A	0.353	A	0.046	No	0.324	A	0.370	A	0.046	No
		PM	0.514	A	0.523	A	0.009	No	0.543	A	0.552	A	0.009	No
4	I-5 Freeway NB Ramps at Remick Ave/ Paxton St	AM	0.581	A	0.589	A	0.008	No	0.614	B	0.623	B	0.009	No
		Mid-Day	0.363	A	0.372	A	0.009	No	0.383	A	0.392	A	0.009	No
		PM	0.579	A	0.588	A	0.009	No	0.610	B	0.618	B	0.008	No
5	Laurel Canyon Blvd/ Branford St	AM	0.788	C	0.788	C	0.000	No	0.842	D	0.842	D	0.000	No
		Mid-Day	0.400	A	0.405	A	0.005	No	0.422	A	0.428	A	0.006	No
		PM	0.711	C	0.717	C	0.006	No	0.752	C	0.758	C	0.006	No
6	San Fernando Rd/ Branford St	AM	0.747	C	0.754	C	0.007	No	0.789	C	0.796	C	0.007	No
		Mid-Day	0.507	A	0.517	A	0.010	No	0.537	A	0.547	A	0.010	No
		PM	0.632	B	0.641	B	0.009	No	0.668	B	0.678	B	0.010	No
7	Laurel Canyon Blvd/ I-5 Freeway NB Off-Ramp at Jerome Street	AM	0.778	C	0.778	C	0.000	No	0.817	D	0.817	D	0.000	No
		Mid-Day	0.341	A	0.341	A	0.000	No	0.357	A	0.357	A	0.000	No
		PM	0.654	B	0.661	B	0.007	No	0.685	B	0.693	B	0.008	No
8	Laurel Canyon Blvd/ Sheldon St	AM	0.812	D	0.812	D	0.000	No	0.857	D	0.857	D	0.000	No
		Mid-Day	0.356	A	0.356	A	0.000	No	0.377	A	0.377	A	0.000	No
		PM	0.624	B	0.629	B	0.005	No	0.658	B	0.664	B	0.006	No

TABLE 3-18
SUMMARY OF INTERSECTION CAPACITY ANALYSIS – ALTERNATIVE 1
(CONCURRENT USE OF ALL THREE DISPOSAL SITES)

			(1)		(2)				(3)		(4)			
			Existing (2015)		Existing with Project (2015)		Change V/C	Signif. Impact?	Cumulative without Project (2018)		Cumulative with Project (2018)		Change V/C	Signif. Impact?
No.	Intersection	Peak Hour	V/C	LOS	V/C	LOS	[(2) - (1)]		V/C	LOS	V/C	LOS	[(4) - (3)]	
9	Laurel Canyon Blvd/ I-5 Freeway SB Ramps	AM	0.790	C	0.790	C	0.000	No	0.831	D	0.831	D	0.000	No
		Mid-Day	0.475	A	0.475	A	0.000	No	0.498	A	0.498	A	0.000	No
		PM	0.805	D	0.813	D	0.008	No	0.844	D	0.852	D	0.008	No
10	I-5 Freeway NB On-Ramp at Rincon Ave/ Sheldon St	AM	0.683	B	0.714	C	0.031	No	0.714	C	0.744	C	0.030	No
		Mid-Day	0.484	A	0.514	A	0.030	No	0.506	A	0.537	A	0.031	No
		PM	0.643	B	0.673	B	0.030	No	0.671	B	0.701	C	0.030	No
11	Haddon Ave/ Sheldon St	AM	0.466	A	0.476	A	0.010	No	0.491	A	0.501	A	0.010	No
		Mid-Day	0.174	A	0.184	A	0.010	No	0.187	A	0.197	A	0.010	No
		PM	0.340	A	0.345	A	0.005	No	0.361	A	0.365	A	0.004	No
12	Telfair Ave/ Sheldon St	AM	0.532	A	0.542	A	0.010	No	0.560	A	0.570	A	0.010	No
		Mid-Day	0.162	A	0.171	A	0.009	No	0.173	A	0.183	A	0.010	No
		PM	0.335	A	0.339	A	0.004	No	0.353	A	0.358	A	0.005	No
13	San Fernando Rd/ Sheldon St	AM	0.737	C	0.752	C	0.015	No	0.777	C	0.793	C	0.016	No
		Mid-Day	0.411	A	0.419	A	0.008	No	0.437	A	0.445	A	0.008	No
		PM	0.656	B	0.664	B	0.008	No	0.692	B	0.701	C	0.009	No
14	Glenoaks Blvd/ Sheldon St	AM	0.774	C	0.791	C	0.017	No	0.833	D	0.849	D	0.016	No
		Mid-Day	0.424	A	0.440	A	0.016	No	0.464	A	0.481	A	0.017	No
		PM	0.593	A	0.609	B	0.016	No	0.641	B	0.658	B	0.017	No
15	Laurel Canyon Blvd/ Paxton St	AM	0.788	C	0.795	C	0.007	No	0.843	D	0.850	D	0.007	No
		Mid-Day	0.446	A	0.453	A	0.007	No	0.471	A	0.478	A	0.007	No
		PM	0.873	D	0.880	D	0.007	No	0.923	E	0.930	E	0.007	No
16	Haddon Ave/ Paxton St	AM	0.498	A	0.507	A	0.009	No	0.522	A	0.530	A	0.008	No
		Mid-Day	0.283	A	0.292	A	0.009	No	0.296	A	0.304	A	0.008	No
		PM	0.563	A	0.571	A	0.008	No	0.588	A	0.597	A	0.009	No

TABLE 3-18
SUMMARY OF INTERSECTION CAPACITY ANALYSIS – ALTERNATIVE 1
(CONCURRENT USE OF ALL THREE DISPOSAL SITES)

			(1)		(2)				(3)		(4)			
			Existing (2015)		Existing with Project (2015)		Change V/C	Signif. Impact?	Cumulative without Project (2018)		Cumulative with Project (2018)		Change V/C	Signif. Impact?
No.	Intersection	Peak Hour	V/C	LOS	V/C	LOS	[(2) - (1)]		V/C	LOS	V/C	LOS	[(4) - (3)]	
17	Kewen Ave/ Paxton St	AM	0.515	A	0.523	A	0.008	No	0.538	A	0.547	A	0.009	No
		Mid-Day	0.276	A	0.284	A	0.008	No	0.288	A	0.297	A	0.009	No
		PM	0.526	A	0.534	A	0.008	No	0.551	A	0.559	A	0.008	No
18	Telfair Ave/ Paxton St	AM	0.386	A	0.393	A	0.007	No	0.409	A	0.415	A	0.006	No
		Mid-Day	0.178	A	0.185	A	0.007	No	0.191	A	0.197	A	0.006	No
		PM	0.365	A	0.372	A	0.007	No	0.387	A	0.393	A	0.006	No
19	San Fernando Rd/ Paxton St	AM	0.841	D	0.841	D	0.000	No	0.888	D	0.888	D	0.000	No
		Mid-Day	0.688	B	0.688	B	0.000	No	0.728	C	0.728	C	0.000	No
		PM	0.816	D	0.816	D	0.000	No	0.864	D	0.864	D	0.000	No
20	San Fernando Rd/ SR-118 Freeway EB Ramps	AM	0.543	A	0.549	A	0.006	No	0.579	A	0.585	A	0.006	No
		Mid-Day	0.389	A	0.395	A	0.006	No	0.413	A	0.420	A	0.007	No
		PM	0.508	A	0.515	A	0.007	No	0.539	A	0.546	A	0.007	No
21	San Fernando Rd/ Van Nuys Blvd	AM	0.771	C	0.778	C	0.007	No	0.828	D	0.835	D	0.007	No
		Mid-Day	0.475	A	0.482	A	0.007	No	0.504	A	0.512	A	0.008	No
		PM	0.659	B	0.666	B	0.007	No	0.704	C	0.711	C	0.007	No
22	San Fernando Rd/ Pierce St	AM	0.794	C	0.801	D	0.007	No	0.882	D	0.889	D	0.007	No
		Mid-Day	0.379	A	0.386	A	0.007	No	0.404	A	0.411	A	0.007	No
		PM	0.684	B	0.691	B	0.007	No	0.755	C	0.763	C	0.008	No
23	San Fernando Rd/ Terra Bella St	AM	0.573	A	0.580	A	0.007	No	0.625	B	0.631	B	0.006	No
		Mid-Day	0.248	A	0.255	A	0.007	No	0.266	A	0.273	A	0.007	No
		PM	0.407	A	0.413	A	0.006	No	0.442	A	0.449	A	0.007	No

TABLE 3-18
SUMMARY OF INTERSECTION CAPACITY ANALYSIS – ALTERNATIVE 1
(CONCURRENT USE OF ALL THREE DISPOSAL SITES)

No.	Intersection	Peak Hour	(1) Existing (2015) V/C	(1) Existing (2015) LOS	(2) Existing with Project (2015) V/C	(2) Existing with Project (2015) LOS	(2) Change V/C [(2) - (1)]	(2) Signif. Impact?	(3) Cumulative without Project (2018) V/C	(3) Cumulative without Project (2018) LOS	(4) Cumulative with Project (2018) V/C	(4) Cumulative with Project (2018) LOS	(4) Change V/C [(4) - (3)]	(4) Signif. Impact?
24	San Fernando Rd/ Osborne St	AM	0.808	D	0.815	D	0.007	No	0.861	D	0.869	D	0.008	No
		Mid-Day	0.606	B	0.613	B	0.007	No	0.643	B	0.650	B	0.007	No
		PM	0.815	D	0.822	D	0.007	No	0.864	D	0.871	D	0.007	No

V/C: volume-to-capacity ratio; LOS: level of service; I: Interstate; SB: southbound; NB: northbound; SR: State Route; EB: eastbound

[a] Based on field observations, over 1,750 vehicles currently traverse through the intersection during the peak hours. Fewer turning movements occur at the intersection due to the "T" intersection configuration. In addition, 2 primary movements, which are complementary (i.e., northbound right-turn/westbound left-turn), occur during peak hours and are non-conflicting moves. A capacity of 1,425 vehicles per hour (vph) is therefore utilized.

Source: LLG 2015. (Appendix F)

TABLE 3-19
SUMMARY OF INTERSECTION CAPACITY ANALYSIS – ALTERNATIVE 2
(USING ONLY BOULEVARD PIT)

No.	Intersection	Peak Hour	(1) Existing (2015) V/C	(1) Existing (2015) LOS	(2) Existing with Project (2015) V/C	(2) Existing with Project (2015) LOS	(2) Change V/C [(2) - (1)]	(2) Signif. Impact?	(3) Cumulative without Project (2018) V/C	(3) Cumulative without Project (2018) LOS	(4) Cumulative with Project (2018) V/C	(4) Cumulative with Project (2018) LOS	(4) Change V/C [(4) - (3)]	(4) Signif. Impact?
1	Arleta Ave/ Devonshire St	AM	0.563	A	0.611	B	0.048	No	0.596	A	0.642	B	0.046	No
		Mid-Day	0.232	A	0.268	A	0.036	No	0.248	A	0.283	A	0.035	No
		PM	0.497	A	0.539	A	0.042	No	0.525	A	0.565	A	0.040	No
2	Arleta Ave/ Paxton St[a]	AM	0.616	B	0.661	B	0.045	No	0.646	B	0.691	B	0.045	No
		Mid-Day	0.327	A	0.372	A	0.045	No	0.344	A	0.389	A	0.045	No
		PM	0.596	A	0.641	B	0.045	No	0.625	B	0.670	B	0.045	No
3	I-5 Freeway SB Ramps at Sharp Ave/ Paxton St	AM	0.654	B	0.688	B	0.034	No	0.687	B	0.720	C	0.033	No
		Mid-Day	0.307	A	0.353	A	0.046	No	0.324	A	0.370	A	0.046	No
		PM	0.514	A	0.523	A	0.009	No	0.543	A	0.552	A	0.009	No
4	I-5 Freeway NB Ramps at Remick Ave/ Paxton St	AM	0.581	A	0.589	A	0.008	No	0.614	B	0.623	B	0.009	No
		Mid-Day	0.363	A	0.372	A	0.009	No	0.383	A	0.392	A	0.009	No
		PM	0.579	A	0.588	A	0.009	No	0.610	B	0.618	B	0.008	No
5	Laurel Canyon Blvd/ Branford St	AM	0.788	C	0.788	C	0.000	No	0.842	D	0.842	D	0.000	No
		Mid-Day	0.400	A	0.417	A	0.017	No	0.422	A	0.440	A	0.018	No
		PM	0.711	C	0.728	C	0.017	No	0.752	C	0.769	C	0.017	No
6	San Fernando Rd/ Branford St	AM	0.747	C	0.754	C	0.007	No	0.789	C	0.796	C	0.007	No
		Mid-Day	0.507	A	0.521	A	0.014	No	0.537	A	0.552	A	0.015	No
		PM	0.632	B	0.646	B	0.014	No	0.668	B	0.683	B	0.015	No
7	Laurel Canyon Blvd/ I-5 Freeway NB Off-Ramp-Jerome St	AM	0.778	C	0.778	C	0.000	No	0.817	D	0.817	D	0.000	No
		Mid-Day	0.341	A	0.349	A	0.008	No	0.357	A	0.364	A	0.007	No
		PM	0.654	B	0.675	B	0.021	No	0.685	B	0.706	C	0.021	No
8	Laurel Canyon Blvd/ Sheldon St	AM	0.812	D	0.819	D	0.007	No	0.857	D	0.863	D	0.006	No
		Mid-Day	0.356	A	0.356	A	0.000	No	0.377	A	0.377	A	0.000	No
		PM	0.624	B	0.634	B	0.010	No	0.658	B	0.668	B	0.010	No

TABLE 3-19
SUMMARY OF INTERSECTION CAPACITY ANALYSIS – ALTERNATIVE 2
(USING ONLY BOULEVARD PIT)

No.	Intersection	Peak Hour	(1) Existing (2015) V/C	(1) Existing (2015) LOS	(2) Existing with Project (2015) V/C	(2) Existing with Project (2015) LOS	(2) Change V/C [(2) - (1)]	(2) Signif. Impact?	(3) Cumulative without Project (2018) V/C	(3) Cumulative without Project (2018) LOS	(4) Cumulative with Project (2018) V/C	(4) Cumulative with Project (2018) LOS	(4) Change V/C [(4) - (3)]	(4) Signif. Impact?
9	Laurel Canyon Blvd/ I-5 Freeway SB Ramps	AM	0.790	C	0.790	C	0.000	No	0.831	D	0.831	D	0.000	No
		Mid-Day	0.475	A	0.475	A	0.000	No	0.498	A	0.498	A	0.000	No
		PM	0.805	D	0.813	D	0.008	No	0.844	D	0.852	D	0.008	No
10	I-5 Freeway NB On-Ramp at Rincon Ave/ Sheldon St	AM	0.683	B	0.708	C	0.025	No	0.714	C	0.739	C	0.025	No
		Mid-Day	0.484	A	0.509	A	0.025	No	0.506	A	0.531	A	0.025	No
		PM	0.643	B	0.668	B	0.025	No	0.671	B	0.696	B	0.025	No
11	Haddon Ave/ Sheldon St	AM	0.466	A	0.483	A	0.017	No	0.491	A	0.508	A	0.017	No
		Mid-Day	0.174	A	0.191	A	0.017	No	0.187	A	0.203	A	0.016	No
		PM	0.340	A	0.340	A	0.000	No	0.361	A	0.361	A	0.000	No
12	Telfair Ave/ Sheldon St	AM	0.532	A	0.549	A	0.017	No	0.560	A	0.577	A	0.017	No
		Mid-Day	0.162	A	0.162	A	0.000	No	0.173	A	0.189	A	0.016	No
		PM	0.335	A	0.335	A	0.000	No	0.353	A	0.353	A	0.000	No
13	San Fernando Rd/ Sheldon St	AM	0.737	C	0.755	C	0.018	No	0.777	C	0.795	C	0.018	No
		Mid-Day	0.411	A	0.429	A	0.018	No	0.437	A	0.455	A	0.018	No
		PM	0.656	B	0.674	B	0.018	No	0.692	B	0.710	C	0.018	No
14	Glenoaks Bled/ Sheldon St	AM	0.774	C	0.774	C	0.000	No	0.833	D	0.833	D	0.000	No
		Mid-Day	0.424	A	0.424	A	0.000	No	0.464	A	0.464	A	0.000	No
		PM	0.593	A	0.593	A	0.000	No	0.641	B	0.641	B	0.000	No
15	Laurel Canyon Blvd/ Paxton St	AM	0.788	C	0.795	C	0.007	No	0.843	D	0.850	D	0.007	No
		Mid-Day	0.446	A	0.453	A	0.007	No	0.471	A	0.478	A	0.007	No
		PM	0.873	D	0.880	D	0.007	No	0.923	E	0.930	E	0.007	No
16	Haddon Ave/ Paxton St	AM	0.498	A	0.507	A	0.009	No	0.522	A	0.530	A	0.008	No
		Mid-Day	0.283	A	0.292	A	0.009	No	0.296	A	0.304	A	0.008	No
		PM	0.563	A	0.571	A	0.008	No	0.588	A	0.597	A	0.009	No

TABLE 3-19
SUMMARY OF INTERSECTION CAPACITY ANALYSIS – ALTERNATIVE 2
(USING ONLY BOULEVARD PIT)

			(1)		(2)				(3)		(4)			
			Existing (2015)		Existing with Project (2015)		Change V/C	Signif. Impact?	Cumulative without Project (2018)		Cumulative with Project (2018)		Change V/C	Signif. Impact?
No.	Intersection	Peak Hour	V/C	LOS	V/C	LOS	[(2) - (1)]		V/C	LOS	V/C	LOS	[(4) - (3)]	
17	Kewen Ave/ Paxton St	AM	0.515	A	0.523	A	0.008	No	0.538	A	0.547	A	0.009	No
		Mid-Day	0.276	A	0.284	A	0.008	No	0.288	A	0.297	A	0.009	No
		PM	0.526	A	0.534	A	0.008	No	0.551	A	0.559	A	0.008	No
18	Telfair Ave/ Paxton St	AM	0.386	A	0.393	A	0.007	No	0.409	A	0.415	A	0.006	No
		Mid-Day	0.178	A	0.185	A	0.007	No	0.191	A	0.197	A	0.006	No
		PM	0.365	A	0.372	A	0.007	No	0.387	A	0.393	A	0.006	No
19	San Fernando Rd/ Paxton St	AM	0.841	D	0.841	D	0.000	No	0.888	D	0.888	D	0.000	No
		Mid-Day	0.688	B	0.688	B	0.000	No	0.728	C	0.728	C	0.000	No
		PM	0.816	D	0.816	D	0.000	No	0.864	D	0.864	D	0.000	No
20	San Fernando Rd/ SR-118 Freeway EB Ramps	AM	0.543	A	0.549	A	0.006	No	0.579	A	0.585	A	0.006	No
		Mid-Day	0.389	A	0.395	A	0.006	No	0.413	A	0.420	A	0.007	No
		PM	0.508	A	0.515	A	0.007	No	0.539	A	0.546	A	0.007	No
21	San Fernando Rd/ Van Nuys Blvd	AM	0.771	C	0.778	C	0.007	No	0.828	D	0.835	D	0.007	No
		Mid-Day	0.475	A	0.482	A	0.007	No	0.504	A	0.512	A	0.008	No
		PM	0.659	B	0.666	B	0.007	No	0.704	C	0.711	C	0.007	No
22	San Fernando Rd/ Pierce St	AM	0.794	C	0.801	D	0.007	No	0.882	D	0.889	D	0.007	No
		Mid-Day	0.379	A	0.386	A	0.007	No	0.404	A	0.411	A	0.007	No
		PM	0.684	B	0.691	B	0.007	No	0.755	C	0.763	C	0.008	No
23	San Fernando Rd/ Terra Bella St	AM	0.573	A	0.580	A	0.007	No	0.625	B	0.631	B	0.006	No
		Mid-Day	0.248	A	0.255	A	0.007	No	0.266	A	0.273	A	0.007	No
		PM	0.407	A	0.413	A	0.006	No	0.442	A	0.449	A	0.007	No

TABLE 3-19
SUMMARY OF INTERSECTION CAPACITY ANALYSIS – ALTERNATIVE 2
(USING ONLY BOULEVARD PIT)

No.	Intersection	Peak Hour	(1) Existing (2015) V/C	(1) Existing (2015) LOS	(2) Existing with Project (2015) V/C	(2) Existing with Project (2015) LOS	(2) Change V/C [(2) - (1)]	(2) Signif. Impact?	(3) Cumulative without Project (2018) V/C	(3) Cumulative without Project (2018) LOS	(4) Cumulative with Project (2018) V/C	(4) Cumulative with Project (2018) LOS	(4) Change V/C [(4) - (3)]	(4) Signif. Impact?
24	San Fernando Rd/ Osborne St	AM	0.808	D	0.815	D	0.007	No	0.861	D	0.869	D	0.008	No
		Mid-Day	0.606	B	0.613	B	0.007	No	0.643	B	0.650	B	0.007	No
		PM	0.815	D	0.822	D	0.007	No	0.864	D	0.871	D	0.007	No

V/C: volume-to-capacity ratio; LOS: level of service; I: Interstate; SB: southbound; NB: northbound; SR: State Route; EB: eastbound

[a] Based on field observations, over 1,750 vehicles currently traverse through the intersection during the peak hours. Fewer turning movements occur at the intersection due to the "T" intersection configuration. In addition, 2 primary movements, which are complementary (i.e., northbound right turn/westbound left turn), occur during peak hours and are non-conflicting moves. A capacity of 1,425 vehicles per hour (vph) is therefore utilized.

Source: LLG 2015. (Appendix F)

TABLE 3-20
SUMMARY OF INTERSECTION CAPACITY ANALYSIS – ALTERNATIVE 3
(USING ONLY SHELDON PIT)

No.	Intersection	Peak Hour	(1) Existing (2015) V/C	(1) Existing (2015) LOS	(2) Existing with Project (2015) V/C	(2) Existing with Project (2015) LOS	(2) Change V/C [(2) - (1)]	(2) Signif. Impact?	(3) Cumulative without Project (2018) V/C	(3) Cumulative without Project (2018) LOS	(4) Cumulative with Project (2018) V/C	(4) Cumulative with Project (2018) LOS	(4) Change V/C [(4) - (3)]	(4) Signif. Impact?
1	Arleta Ave/ Devonshire St	AM	0.563	A	0.611	B	0.048	No	0.596	A	0.642	B	0.046	No
		Mid-Day	0.232	A	0.268	A	0.036	No	0.248	A	0.283	A	0.035	No
		PM	0.497	A	0.539	A	0.042	No	0.525	A	0.565	A	0.040	No
2	Arleta Ave/ Paxton St[a]	AM	0.616	B	0.661	**B**	0.045	No	0.646	B	0.691	B	0.045	No
		Mid-Day	0.327	A	0.372	A	0.045	No	0.344	A	0.389	A	0.045	No
		PM	0.596	A	0.641	B	0.045	No	0.625	B	0.670	B	0.045	No
3	I-5 Freeway SB Ramps- Sharp Ave/ Paxton St	AM	0.654	B	0.688	B	0.034	No	0.687	B	0.720	C	0.033	No
		Mid-Day	0.307	A	0.353	A	0.046	No	0.324	A	0.370	A	0.046	No
		PM	0.514	A	0.523	A	0.009	No	0.543	A	0.552	A	0.009	No
4	I-5 Freeway NB Ramps- Remick Ave/ Paxton St	AM	0.581	A	0.589	A	0.008	No	0.614	B	0.623	B	0.009	No
		Mid-Day	0.363	A	0.372	A	0.009	No	0.383	A	0.392	A	0.009	No
		PM	0.579	A	0.588	A	0.009	No	0.610	B	0.618	B	0.008	No
5	Laurel Canyon Blvd/ Branford St	AM	0.788	C	0.788	C	0.000	No	0.842	D	0.842	D	0.000	No
		Mid-Day	0.400	A	0.400	A	0.000	No	0.422	A	0.422	A	0.000	No
		PM	0.711	C	0.711	C	0.000	No	0.752	C	0.752	C	0.000	No
6	San Fernando Rd/ Branford St	AM	0.747	C	0.754	C	0.007	No	0.789	C	0.796	C	0.007	No
		Mid-Day	0.507	A	0.514	A	0.007	No	0.537	A	0.544	A	0.007	No
		PM	0.632	B	0.639	B	0.007	No	0.668	B	0.675	B	0.007	No
7	Laurel Canyon Blvd/ I-5 Freeway NB Off-Ramp- Jerome St	AM	0.778	C	0.778	C	0.000	No	0.817	D	0.817	D	0.000	No
		Mid-Day	0.341	A	0.341	A	0.000	No	0.357	A	0.357	A	0.000	No
		PM	0.654	B	0.654	B	0.000	No	0.685	B	0.685	B	0.000	No
8	Laurel Canyon Blvd/ Sheldon St	AM	0.812	D	0.812	D	0.000	No	0.857	D	0.857	D	0.000	No
		Mid-Day	0.356	A	0.366	A	0.010	No	0.377	A	0.386	A	0.009	No
		PM	0.624	B	0.624	B	0.000	No	0.658	B	0.658	B	0.000	No

TABLE 3-20
SUMMARY OF INTERSECTION CAPACITY ANALYSIS – ALTERNATIVE 3
(USING ONLY SHELDON PIT)

No.	Intersection	Peak Hour	(1) Existing (2015) V/C	(1) Existing (2015) LOS	(2) Existing with Project (2015) V/C	(2) Existing with Project (2015) LOS	(2) Change V/C [(2) - (1)]	(2) Signif. Impact?	(3) Cumulative without Project (2018) V/C	(3) Cumulative without Project (2018) LOS	(4) Cumulative with Project (2018) V/C	(4) Cumulative with Project (2018) LOS	(4) Change V/C [(4) - (3)]	(4) Signif. Impact?
9	Laurel Canyon Blvd/ I-5 Freeway SB Ramps	AM	0.790	C	0.790	C	0.000	No	0.831	D	0.831	D	0.000	No
		Mid-Day	0.475	A	0.475	A	0.000	No	0.498	A	0.498	A	0.000	No
		PM	0.805	D	0.813	D	0.008	No	0.844	D	0.852	D	0.008	No
10	I-5 Freeway NB On-Ramp- Rincon Ave/ Sheldon St	AM	0.683	B	0.721	C	0.038	No	0.714	C	0.752	C	0.038	No
		Mid-Day	0.484	A	0.522	A	0.038	No	0.506	A	0.543	A	0.037	No
		PM	0.643	B	0.680	B	0.037	No	0.671	B	0.708	C	0.037	No
11	Haddon Ave/ Sheldon St	AM	0.466	A	0.476	A	0.010	No	0.491	A	0.501	A	0.010	No
		Mid-Day	0.174	A	0.184	A	0.010	No	0.187	A	0.197	A	0.010	No
		PM	0.340	A	0.350	A	0.010	No	0.361	A	0.371	A	0.010	No
12	Telfair Ave/ Sheldon St	AM	0.532	A	0.542	A	0.010	No	0.560	A	0.570	A	0.010	No
		Mid-Day	0.162	A	0.172	A	0.010	No	0.173	A	0.183	A	0.010	No
		PM	0.335	A	0.345	A	0.010	No	0.353	A	0.363	A	0.010	No
13	San Fernando Rd/ Sheldon St	AM	0.737	C	0.757	C	0.020	No	0.777	C	0.795	C	0.018	No
		Mid-Day	0.411	A	0.421	A	0.010	No	0.437	A	0.448	A	0.011	No
		PM	0.656	B	0.667	B	0.011	No	0.692	B	0.703	C	0.011	No
14	Glenoaks Blvd/ Sheldon St	AM	0.774	C	0.791	C	0.017	No	0.833	D	0.849	D	0.016	No
		Mid-Day	0.424	A	0.441	A	0.017	No	0.464	A	0.481	A	0.017	No
		PM	0.593	A	0.609	B	0.016	No	0.641	B	0.658	B	0.017	No
15	Laurel Canyon Blvd/ Paxton St	AM	0.788	C	0.795	C	0.007	No	0.843	D	0.850	D	0.007	No
		Mid-Day	0.446	A	0.453	A	0.007	No	0.471	A	0.478	A	0.007	No
		PM	0.873	D	0.880	D	0.007	No	0.923	E	0.930	E	0.007	No
16	Haddon Ave/ Paxton St	AM	0.498	A	0.507	A	0.009	No	0.522	A	0.530	A	0.008	No
		Mid-Day	0.283	A	0.292	A	0.009	No	0.296	A	0.304	A	0.008	No
		PM	0.563	A	0.571	A	0.008	No	0.588	A	0.597	A	0.009	No

TABLE 3-20
SUMMARY OF INTERSECTION CAPACITY ANALYSIS – ALTERNATIVE 3
(USING ONLY SHELDON PIT)

No.	Intersection	Peak Hour	(1) Existing (2015) V/C	(1) Existing (2015) LOS	(2) Existing with Project (2015) V/C	(2) Existing with Project (2015) LOS	(2) Change V/C [(2) - (1)]	(2) Signif. Impact?	(3) Cumulative without Project (2018) V/C	(3) Cumulative without Project (2018) LOS	(4) Cumulative with Project (2018) V/C	(4) Cumulative with Project (2018) LOS	(4) Change V/C [(4) - (3)]	(4) Signif. Impact?
17	Kewen Ave Paxton St	AM	0.515	A	0.523	A	0.008	No	0.538	A	0.547	A	0.009	No
		Mid-Day	0.276	A	0.284	A	0.008	No	0.288	A	0.297	A	0.009	No
		PM	0.526	A	0.534	A	0.008	No	0.551	A	0.559	A	0.008	No
18	Telfair Ave/ Paxton St	AM	0.386	A	0.393	A	0.007	No	0.409	A	0.415	A	0.006	No
		Mid-Day	0.178	A	0.185	A	0.007	No	0.191	A	0.197	A	0.006	No
		PM	0.365	A	0.372	A	0.007	No	0.387	A	0.393	A	0.006	No
19	San Fernando Rd/ Paxton St	AM	0.841	D	0.841	D	0.000	No	0.888	D	0.888	D	0.000	No
		Mid-Day	0.688	B	0.688	B	0.000	No	0.728	C	0.728	C	0.000	No
		PM	0.816	D	0.816	D	0.000	No	0.864	D	0.864	D	0.000	No
20	San Fernando Rd/ SR-118 Freeway EB Ramps	AM	0.543	A	0.549	A	0.006	No	0.579	A	0.585	A	0.006	No
		Mid-Day	0.389	A	0.395	A	0.006	No	0.413	A	0.420	A	0.007	No
		PM	0.508	A	0.515	A	0.007	No	0.539	A	0.546	A	0.007	No
21	San Fernando Rd/ Van Nuys Blvd	AM	0.771	C	0.778	C	0.007	No	0.828	D	0.835	D	0.007	No
		Mid-Day	0.475	A	0.482	A	0.007	No	0.504	A	0.512	A	0.008	No
		PM	0.659	B	0.666	B	0.007	No	0.704	C	0.711	C	0.007	No
22	San Fernando Rd/ Pierce St	AM	0.794	C	0.801	D	0.007	No	0.882	D	0.889	D	0.007	No
		Mid-Day	0.379	A	0.386	A	0.007	No	0.404	A	0.411	A	0.007	No
		PM	0.684	B	0.691	B	0.007	No	0.755	C	0.763	C	0.008	No
23	San Fernando Rd/ Terra Bella St	AM	0.573	A	0.580	A	0.007	No	0.625	B	0.631	B	0.006	No
		Mid-Day	0.248	A	0.255	A	0.007	No	0.266	A	0.273	A	0.007	No
		PM	0.407	A	0.413	A	0.006	No	0.442	A	0.449	A	0.007	No

TABLE 3-20
SUMMARY OF INTERSECTION CAPACITY ANALYSIS – ALTERNATIVE 3
(USING ONLY SHELDON PIT)

No.	Intersection	Peak Hour	(1) Existing (2015) V/C	(1) Existing (2015) LOS	(2) Existing with Project (2015) V/C	(2) Existing with Project (2015) LOS	(2) Change V/C [(2) - (1)]	(2) Signif. Impact?	(3) Cumulative without Project (2018) V/C	(3) Cumulative without Project (2018) LOS	(4) Cumulative with Project (2018) V/C	(4) Cumulative with Project (2018) LOS	(4) Change V/C [(4) - (3)]	(4) Signif. Impact?
24	San Fernando Rd/ Osborne St	AM	0.808	D	0.815	D	0.007	No	0.861	D	0.869	D	0.008	No
		Mid-Day	0.606	B	0.613	B	0.007	No	0.643	B	0.650	B	0.007	No
		PM	0.815	D	0.822	D	0.007	No	0.864	D	0.871	D	0.007	No

V/C: volume-to-capacity ratio; LOS: level of service; I: Interstate; SB: southbound; NB: northbound; SR: State Route; EB: eastbound

[a] Based on field observations, over 1,750 vehicles currently traverse through the intersection during the peak hours. Fewer turning movements occur at the intersection due to the "T" intersection configuration. In addition, 2 primary movements, which are complementary (i.e., northbound right turn/westbound left turn), occur during peak hours and are non-conflicting moves. A capacity of 1,425 vehicles per hour (vph) is therefore utilized.

Source: LLG 2015. (Appendix F)

TABLE 3-21
SUMMARY OF INTERSECTION CAPACITY ANALYSIS – ALTERNATIVE 4
(USING ONLY CAL-MAT PIT)

No.	Intersection	Peak Hour	(1) Existing (2015) V/C	(1) Existing (2015) LOS	(2) Existing with Project (2015) V/C	(2) Existing with Project (2015) LOS	(2) Change V/C [(2) - (1)]	(2) Signif. Impact?	(3) Cumulative without Project (2018) V/C	(3) Cumulative without Project (2018) LOS	(4) Cumulative with Project (218) V/C	(4) Cumulative with Project (218) LOS	(4) Change V/C [(4) - (3)]	(4) Signif. Impact?
1	Arleta Ave/ Devonshire St	AM	0.563	A	0.611	B	0.048	No	0.596	A	0.642	B	0.046	No
		Mid-Day	0.232	A	0.268	A	0.036	No	0.248	A	0.283	A	0.035	No
		PM	0.497	A	0.539	A	0.042	No	0.525	A	0.565	A	0.040	No
2	Arleta Ave/ Paxton St[a]	AM	0.616	B	0.661	B	0.045	No	0.646	B	0.691	B	0.045	No
		Mid-Day	0.327	A	0.372	A	0.045	No	0.344	A	0.389	A	0.045	No
		PM	0.596	A	0.641	B	0.045	No	0.625	B	0.670	B	0.045	No
3	I-5 Freeway SB Ramps- Sharp Ave/ Paxton St	AM	0.654	B	0.688	B	0.034	No	0.687	B	0.720	C	0.033	No
		Mid-Day	0.307	A	0.353	A	0.046	No	0.324	A	0.370	A	0.046	No
		PM	0.514	A	0.523	A	0.009	No	0.543	A	0.552	A	0.009	No
4	I-5 Freeway NB Ramps- Remick Ave/ Paxton St	AM	0.581	A	0.589	A	0.008	No	0.614	B	0.623	B	0.009	No
		Mid-Day	0.363	A	0.372	A	0.009	No	0.383	A	0.392	A	0.009	No
		PM	0.579	A	0.588	A	0.009	No	0.610	B	0.618	B	0.008	No
5	Laurel Canyon Blvd/ Branford St	AM	0.788	C	0.788	C	0.000	No	0.842	D	0.842	D	0.000	No
		Mid-Day	0.400	A	0.400	A	0.000	No	0.422	A	0.422	A	0.000	No
		PM	0.711	C	0.711	C	0.000	No	0.752	C	0.752	C	0.000	No
6	San Fernando Rd/ Branford St	AM	0.747	C	0.754	C	0.007	No	0.789	C	0.796	C	0.007	No
		Mid-Day	0.507	A	0.514	A	0.007	No	0.537	A	0.544	A	0.007	No
		PM	0.632	B	0.639	B	0.007	No	0.668	B	0.675	B	0.007	No
7	Laurel Canyon Blvd/ I-5 Freeway NB Off-Ramp- Jerome St	AM	0.778	C	0.778	C	0.000	No	0.817	D	0.817	D	0.000	No
		Mid-Day	0.341	A	0.341	A	0.000	No	0.357	A	0.357	A	0.000	No
		PM	0.654	B	0.654	B	0.000	No	0.685	B	0.685	B	0.000	No
8	Laurel Canyon Blvd/ Sheldon St	AM	0.812	D	0.812	D	0.000	No	0.857	D	0.857	D	0.000	No
		Mid-Day	0.356	A	0.366	A	0.010	No	0.377	A	0.386	A	0.009	No
		PM	0.624	B	0.624	B	0.000	No	0.658	B	0.658	B	0.000	No

TABLE 3-21
SUMMARY OF INTERSECTION CAPACITY ANALYSIS – ALTERNATIVE 4
(USING ONLY CAL-MAT PIT)

No.	Intersection	Peak Hour	(1) Existing (2015) V/C	(1) Existing (2015) LOS	(2) Existing with Project (2015) V/C	(2) Existing with Project (2015) LOS	(2) Change V/C [(2) - (1)]	(2) Signif. Impact?	(3) Cumulative without Project (2018) V/C	(3) Cumulative without Project (2018) LOS	(4) Cumulative with Project (218) V/C	(4) Cumulative with Project (218) LOS	(4) Change V/C [(4) - (3)]	(4) Signif. Impact?
9	Laurel Canyon Blvd/ I-5 Freeway SB Ramps	AM	0.790	C	0.790	C	0.000	No	0.831	D	0.831	D	0.000	No
		Mid-Day	0.475	A	0.475	A	0.000	No	0.498	A	0.498	A	0.000	No
		PM	0.805	D	0.813	D	0.008	No	0.844	D	0.852	D	0.008	No
10	I-5 Freeway NB On-Ramp- Rincon Ave/ Sheldon St	AM	0.683	B	0.721	C	0.038	No	0.714	C	0.752	C	0.038	No
		Mid-Day	0.484	A	0.522	A	0.038	No	0.506	A	0.543	A	0.037	No
		PM	0.643	B	0.680	B	0.037	No	0.671	B	0.708	C	0.037	No
11	Haddon Ave/ Sheldon St	AM	0.466	A	0.476	A	0.010	No	0.491	A	0.501	A	0.010	No
		Mid-Day	0.174	A	0.184	A	0.010	No	0.187	A	0.197	A	0.010	No
		PM	0.340	A	0.350	A	0.010	No	0.361	A	0.371	A	0.010	No
12	Telfair Ave/ Sheldon St	AM	0.532	A	0.542	A	0.010	No	0.560	A	0.570	A	0.010	No
		Mid-Day	0.162	A	0.172	A	0.010	No	0.173	A	0.183	A	0.010	No
		PM	0.335	A	0.345	A	0.010	No	0.353	A	0.363	A	0.010	No
13	San Fernando Rd/ Sheldon St	AM	0.737	C	0.757	C	0.020	No	0.777	C	0.795	C	0.018	No
		Mid-Day	0.411	A	0.421	A	0.010	No	0.437	A	0.448	A	0.011	No
		PM	0.656	B	0.667	B	0.011	No	0.692	B	0.703	C	0.011	No
14	Glenoaks Blvd/ Sheldon St	AM	0.774	C	0.807	D	0.033	No	0.833	D	0.866	D	0.033	**Yes**
		Mid-Day	0.424	A	0.457	A	0.033	No	0.464	A	0.497	A	0.033	No
		PM	0.593	A	0.626	B	0.033	No	0.641	B	0.675	B	0.034	No
15	Laurel Canyon Blvd/ Paxton St	AM	0.788	C	0.795	C	0.007	No	0.843	D	0.850	D	0.007	No
		Mid-Day	0.446	A	0.453	A	0.007	No	0.471	A	0.478	A	0.007	No
		PM	0.873	D	0.880	D	0.007	No	0.923	E	0.930	E	0.007	No
16	Haddon Ave/ Paxton St	AM	0.498	A	0.507	A	0.009	No	0.522	A	0.530	A	0.008	No
		Mid-Day	0.283	A	0.292	A	0.009	No	0.296	A	0.304	A	0.008	No
		PM	0.563	A	0.571	A	0.008	No	0.588	A	0.597	A	0.009	No

TABLE 3-21
SUMMARY OF INTERSECTION CAPACITY ANALYSIS – ALTERNATIVE 4
(USING ONLY CAL-MAT PIT)

No.	Intersection	Peak Hour	(1) Existing (2015) V/C	(1) Existing (2015) LOS	(2) Existing with Project (2015) V/C	(2) Existing with Project (2015) LOS	(2) Change V/C [(2) - (1)]	(2) Signif. Impact?	(3) Cumulative without Project (2018) V/C	(3) Cumulative without Project (2018) LOS	(4) Cumulative with Project (218) V/C	(4) Cumulative with Project (218) LOS	(4) Change V/C [(4) - (3)]	(4) Signif. Impact?
17	Kewen Ave/ Paxton St	AM	0.515	A	0.523	A	0.008	No	0.538	A	0.547	A	0.009	No
		Mid-Day	0.276	A	0.284	A	0.008	No	0.288	A	0.297	A	0.009	No
		PM	0.526	A	0.534	A	0.008	No	0.551	A	0.559	A	0.008	No
18	Telfair Ave/ Paxton St	AM	0.386	A	0.393	A	0.007	No	0.409	A	0.415	A	0.006	No
		Mid-Day	0.178	A	0.185	A	0.007	No	0.191	A	0.197	A	0.006	No
		PM	0.365	A	0.372	A	0.007	No	0.387	A	0.393	A	0.006	No
19	San Fernando Rd/ Paxton St	AM	0.841	D	0.841	D	0.000	No	0.888	D	0.888	D	0.000	No
		Mid-Day	0.688	B	0.688	B	0.000	No	0.728	C	0.728	C	0.000	No
		PM	0.816	D	0.816	D	0.000	No	0.864	D	0.864	D	0.000	No
20	San Fernando Rd/ SR-118 Freeway EB Ramps	AM	0.543	A	0.549	A	0.006	No	0.579	A	0.585	A	0.006	No
		Mid-Day	0.389	A	0.395	A	0.006	No	0.413	A	0.420	A	0.007	No
		PM	0.508	A	0.515	A	0.007	No	0.539	A	0.546	A	0.007	No
21	San Fernando Rd/ Van Nuys Blvd	AM	0.771	C	0.778	C	0.007	No	0.828	D	0.835	D	0.007	No
		Mid-Day	0.475	A	0.482	A	0.007	No	0.504	A	0.512	A	0.008	No
		PM	0.659	B	0.666	B	0.007	No	0.704	C	0.711	C	0.007	No
22	San Fernando Rd/ Pierce St	AM	0.794	C	0.801	D	0.007	No	0.882	D	0.889	D	0.007	No
		Mid-Day	0.379	A	0.386	A	0.007	No	0.404	A	0.411	A	0.007	No
		PM	0.684	B	0.691	B	0.007	No	0.755	C	0.763	C	0.008	No
23	San Fernando Rd/ Terra Bella St	AM	0.573	A	0.580	A	0.007	No	0.625	B	0.631	B	0.006	No
		Mid-Day	0.248	A	0.255	A	0.007	No	0.266	A	0.273	A	0.007	No
		PM	0.407	A	0.413	A	0.006	No	0.442	A	0.449	A	0.007	No

TABLE 3-21
SUMMARY OF INTERSECTION CAPACITY ANALYSIS – ALTERNATIVE 4
(USING ONLY CAL-MAT PIT)

No.	Intersection	Peak Hour	(1)		(2)				(3)		(4)			
			Existing (2015)		Existing with Project (2015)		Change V/C	Signif. Impact?	Cumulative without Project (2018)		Cumulative with Project (218)		Change V/C	Signif. Impact?
			V/C	LOS	V/C	LOS	[(2) - (1)]		V/C	LOS	V/C	LOS	[(4) - (3)]	
24	San Fernando Rd/ Osborne St	AM	0.808	D	0.815	D	0.007	No	0.861	D	0.869	D	0.008	No
		Mid-Day	0.606	B	0.613	B	0.007	No	0.643	B	0.650	B	0.007	No
		PM	0.815	D	0.822	D	0.007	No	0.864	D	0.871	D	0.007	No

V/C: volume-to-capacity ratio; LOS: level of service; I: Interstate; SB: southbound; NB: northbound; SR: State Route; EB: eastbound

[a] Based on field observations, over 1,750 vehicles currently traverse through the intersection during the peak hours. Fewer turning movements occur at the intersection due to the "T" intersection configuration. In addition, 2 primary movements, which are complementary (i.e., northbound right turn/westbound left turn), occur during peak hours and are non-conflicting moves. A capacity of 1,425 vehicles per hour (vph) is therefore utilized.

Source: LLG 2015 (Appendix F)

Supplemental Review of Kewen Avenue/Paxton Street Intersection

Because of the proposed Haul Route B would traverse Paxton Street, a supplemental review has also been conducted at the unsignalized Kewen Avenue/Paxton Street intersection, which is located immediately adjacent to Telfair Elementary School. The Kewen Avenue/Paxton Street intersection is presently a T-intersection controlled by a stop sign facing the northbound Kewen Avenue approach with unrestricted flow on Paxton Street. The methodology outlined in the Highway Capacity Manual (HCM) for unsignalized intersections has been utilized to determine the individual movement and approach delays expected to be experienced by motorists traversing through this intersection. The supplemental intersection analyses for the Existing, Existing with Project, Cumulative without Project, and Cumulative with Project conditions are summarized in Table 3-22.

TABLE 3-22
SUPPLEMENTAL INTERSECTION ANALYSIS[a] SUMMARY

No.	Intersection	Peak Hour	(1) Existing (2015)		(2) Existing with Project (2015)		Change In Delay	(3) Cumulative without Project (2018)		(4) Cumulative with Project (2018)		Change In Delay
			Delay[b]	LOS[c]	Delay[b]	LOS[c]	[(2) - (1)]	Delay[b]	LOS[c]	Delay[b]	LOS[c]	[(4) - (3)]
17	Kewen Avenue/Paxton Street[d]	AM	28.3	D	29.5	D	1.2	32.7	D	35.0	D	2.3
		Midday	12.0	B	12.2	B	0.2	12.2	B	12.4	B	0.2
		PM	23.1	C	24.0	C	0.9	25.6	D	26.5	D	0.9

LOS: level of service; s/veh: seconds per vehicle

[a] Intersection analysis based on the Highway Capacity Manual operational analysis methodologies.
[b] Reported control delay values in seconds per vehicle.
[c] Unsignalized Intersection Levels of Service are based on the following criteria:

Control Delay (s/veh)	LOS
<= 10	A
> 10-15	B
> 15-25	C
> 25-35	D
> 35-50	E
> 50	F

[d] Two-Way Stop-Controlled Intersection. Reported values represent the delays associated with the most constrained approach of the intersection.

Source: LLG 2015 (Appendix F)

Consistent with the HCM methodology, the values in Table 3-22 represent the worst case (i.e., highest) approach delays and LOS that are expected to occur at the northbound Kewen Avenue approach to the intersection. As the worst case approach of this intersection is forecasted to operate at LOS D or better under all analysis conditions, including Existing and Cumulative with or without the Project, delays to motorists traversing through this intersection are not expected to be adversely affected by the Project. Additionally, it should be noted that the passenger loading/unloading zones associated with Telfair Elementary School during the morning school drop-off and afternoon pick-up time periods are located along Telfair Avenue and Weidner Street, and not on Paxton Street along the proposed Haul Route B.

Supplemental Caltrans Impact Analysis

A supplemental analysis of Caltrans facilities was prepared based on the latest edition of the Highway Capacity Manual operational analysis methodologies pursuant to Caltrans' *Guide for the Preparation of Traffic Impact Studies*. As discussed above for the intersection impact analysis, these guidelines are meant to reflect permanent land use changes and associated traffic generation, rather than construction-related traffic that is always, by definition, temporary. Based on recent coordination with Caltrans, analyses of Caltrans facilities should be conducted when and if a project is expected to add 50 or more peak hour trips in either direction on a freeway mainline segment or 10 or more peak hour trips to a freeway ramp location.

<u>Freeway Mainline Segment Review</u>

The following mainline freeway segments along the I-5 Freeway have been identified for assessment based on their proximity to the Project site and the identified haul routes to access each of the three sediment disposal sites:

- I-5 Freeway south of Paxton Street
- I-5 Freeway north of Osborne Street
- I-5 Freeway south of SR-170.

As shown in Table 3-23, the Project is not expected to generate 50 or more vehicle trips, during either the AM, mid-day, or PM peak hours at any proximate freeway mainline location. Thus, any freeway mainline location would not exceed the threshold for preparation of a Caltrans freeway mainline analysis. Therefore, no further analysis of Caltrans freeway mainline segments is required.

TABLE 3-23
SUPPLEMENTAL CALTRANS FREEWAY SEGMENT ANALYSIS[a] SUMMARY

Freeway Segment	Peak Hour	Direction	Caltrans Thresholds For Analysis (Trips)	Project PCE Adjusted Trip Ends[b]	Analysis Required?
I-5 Freeway south of Paxton St	AM	NB	50	30	No
	Midday	SB	50	30	No
		NB	50	30	No
	PM	SB	50	30	No
		NB	50	30	No
		SB	50	30	No
I-5 Freeway north of Osborne St	AM	NB	50	30	No
	Midday	SB	50	30	No
		NB	50	30	No
	PM	SB	50	30	No
		NB	50	30	No
		SB	50	30	No
I-5 Freeway south of SR-170	AM	NB	50	30	No
	Midday	SB	50	30	No
		NB	50	30	No
	PM	SB	50	30	No
		NB	50	30	No
		SB	50	30	No

Caltrans: California Department of Transportation; PCE: Passenger Car Equivalent; I: Interstate; NB: northbound; SB: southbound; SR: State Route

[a] Freeway assessment per the Caltrans' *Guide for the Preparation of Traffic Impact Studies*, December 2002, and recent coordination with Caltrans.
[b] Based on the project trip generation and trip distribution for the project.

Source: LLG 2015 (Appendix F)

Ramp Vehicle Queuing Analysis

The Project would be expected to add ten or more vehicle trips during the AM, mid-day, and/or PM peak hours to the adjacent freeway ramp locations, which is the threshold for preparation of a Caltrans ramp analysis. Therefore, a detailed review was undertaken with respect to vehicle queuing on the freeway ramp approaches at the study intersections as part of the TIS. The queuing analysis was prepared based on the latest edition of the Highway Capacity Manual operational analysis methodologies for the Year 2018 cumulative with Project conditions for either Alternative 3 or 4. It should be noted that Alternative 3 and 4 are forecasted to generate either the same or more Project-related vehicle trips at the adjacent freeway ramp intersections than either Alternative 1 or 2. Ramp queuing analyses associated with Alternative 3 and 4 thus represent the worst-case conditions. Each of the four freeway ramp intersection approaches were reviewed in terms of expected maximum vehicle queues (i.e., 95th percentile queues) as this represents the maximum back of vehicle queues with 95th percentile traffic volumes. The corresponding maximum vehicle queue lengths were then compared with the 85th percentile available ramp storage lengths pursuant to Caltrans recommendation. As presented in Table 3-24, no vehicle queuing back onto the I-5 Freeway mainline is expected; thus, further consideration of temporary transportation improvement measures is not warranted. In addition, the analysis can be considered conservative as PCE factors have be incorporated into the traffic analysis and, as such, the actual queue lengths would be shorter than analyzed here.

TABLE 3-24
SUPPLEMENTAL CALTRANS RAMP QUEUING[a] ANALYSIS SUMMARY

Ramp Location		Peak Hour	Available 85th Percentile Storage[b] (Feet)	Cumulative with Project (2018)	
				95th Percentile Queue[c] (Feet)	Adequate Storage?
3	I-5 Freeway SB Off-Ramp to Paxton St	AM	1,445	638	Yes
		Midday	1,445	75	Yes
		PM	1,445	352	Yes
4	I-5 Freeway NB Off-Ramp to Paxton St	AM	1,675	140	Yes
		Midday	1,675	55	Yes
		PM	1,675	207	Yes
9	I-5 Freeway SB Off-Ramp to Laurel Canyon Blvd	AM	960	126	Yes
		Midday	960	89	Yes
		PM	960	253	Yes
10	Sheldon St WB Left-Turn onto I-5 Freeway NB On-Ramp	AM	150	67	Yes
		Midday	150	25	Yes
		PM	150	33	Yes

Caltrans: California Department of Transportation; I: Interstate; SB: southbound; NB: northbound; WB: westbound

[a] Intersection queuing analysis based on the Highway Capacity Software (HCS).
[b] Available 85th percentile storage is determined based on the total available storage capacity multiplied by 85% so as to allow a 15% safety factor. The available storage capacity is based on aerial measurements from Caltrans Earth.
[c] The 95th percentile queue is the maximum back of queue with 95th percentile traffic volumes. An average vehicle length of 25 feet is utilized.

Source: LLG 2015 (Appendix F)

Project Operation

Operation of the Project would involve periodic maintenance visits by LACDPW staff, similar to existing conditions. Because there would be no increase in operation-related trips, there would be no impact related to operation of the Project.

Therefore, with implementation of MM TRA-1, there would be less than significant impacts related to conflict with applicable plans, ordinances, or policies establishing measures of effectiveness for the performance of the intersections and highways/freeways in the Project study area during construction of the Project.

b) Would the project conflict with an applicable congestion management program, including, but not limited to level of service standards and travel demand established by the county congestion management agency for designated roads or highways?

No Impact. In accordance with the procedures outlined in the *2010 Los Angeles County Congestion Management Program* (CMP), the TIS included a review to determine if a formal Traffic Impact Assessment (TIA) would be required to determine the potential impacts on designated monitoring locations on the CMP highway system. As discussed below, there would be no impacts to CMP intersections, freeways, or transit service.

Intersections

There are no CMP intersection monitoring locations in the vicinity of the Project site. The CMP TIA guidelines require that intersection monitoring locations must be examined if a project will add 50 or more trips during either the AM or PM weekday peak periods. The Project would not add 50 or more trips, during the AM or PM peak hours at the CMP monitoring intersections. Therefore, no further review of potential impacts to intersection monitoring locations that are part of the CMP highway system is required.

Freeways

The following CMP freeway monitoring location nearest to the Project site has been identified:

- CMP Station No. 1007 (I-5 Freeway near Osborne Street)

The CMP TIA guidelines require that freeway monitoring locations must be examined if a project will add 150 or more trips (in either direction) during either the weekday AM or PM peak hours. The Project would not add 150 or more trips (in either direction) during either the weekday AM or PM peak hours to the CMP freeway monitoring location. Therefore, no further review of potential impacts to freeway monitoring locations that are part of the CMP highway system is required.

Transit Impact Review

As required by the 2010 CMP, a review must be made of CMP transit service. As the Project consists of temporary sediment removal involving the addition of haul trucks to the surrounding street system, increased demand on the existing transit service(s) provided in the vicinity of the Project is not expected. Therefore, no further analysis is warranted as no impacts to future transit services in the Project area would occur as a result of the Project.

c) Would the project result in a change in air traffic patterns, including either an increase in traffic levels or change in location that results in substantial safety risks?

No Impact. As discussed in Section 3.8, Hazards and Hazardous Materials, the Project would not increase or otherwise affect air traffic patterns related to Whiteman Airport, located approximately 1.5 miles east of the Project site. There would be no impact and no mitigation is required.

d) Would the project substantially increase hazards due to a design feature (e.g., sharp curves or dangerous intersections) or incompatible uses (e.g., farm equipment)?

No Impact. The Project would not involve any change to the road configurations in the Project area and would not change in land use, or traffic related to the land use, on the site that would represent an incompatible use. Operation of the Project would be essentially the same as the existing condition, and therefore would not increase traffic hazards or be an incompatible use. There would be no impact and no mitigation is required.

e) Would the project result in inadequate emergency access?

Less than Significant Impact. As discussed in Section 3.8, construction activities would be staged on the Project site and would not interfere with emergency access in the Project area. As discussed above, there would be less than significant impacts at the 24 study intersections related

to the daily (Monday through Saturday) haul truck trips. Additionally, any activities on or adjacent to public streets that could limit traffic flow, such as construction equipment delivery, would be conducted with traffic control measures per the LACDPW Greenbook (RR TRA-1). RR TRA-1 would ensure that existing circulation would not be affected during Project construction in such a way that would physically impair or impede emergency access. Therefore, impacts related to emergency access would be less than significant and no mitigation is required.

f) Would the project conflict with adopted policies, plans, or programs regarding public transit, bicycle, or pedestrian facilities, or otherwise decrease the performance or safety of such facilities?

No Impact. Implementation of the Project would not create a demand for alternative transportation systems and would not affect public transit services such that a conflict with alternative transportation policies would occur. No demand for public transit, bicycle, or pedestrian facilities would be created by the Project since there would be no change to land uses in the Project area. There would be no impact and no mitigation is required.

MITIGATION MEASURES

MM TRA-1 To eliminate the impact at the Glenoaks Boulevard/Sheldon Street intersection in the AM peak hour, the Los Angeles County Flood Control District shall be responsible for ensuring that haul trucks are not solely traveling to the Cal Mit Pit sediment disposal site at any time. This requirement shall be included in the Contractor's specifications and monitored by the on-site Construction Manager as well as the Los Angeles County Flood Control District, when inspecting the site.

3.17 UTILITIES AND SERVICE SYSTEMS	**Potentially Significant Impact**	**Less than Significant with Mitigation**	**Less than Significant Impact**	**No Impact**
Would the project:				
a) Exceed wastewater treatment requirements of the applicable Regional Water Quality Control Board?	☐	☐	☐	☒
b) Require or result in the construction of new water or wastewater treatment facilities or expansion of existing facilities, the construction of which could cause significant environmental effects?	☐	☐	☐	☒
c) Require or result in the construction of new stormwater drainage facilities or expansion of existing facilities, the construction of which could cause significant environmental effects?	☐	☒	☐	☐
d) Have sufficient water supplies available to serve the Project from existing entitlements and resources, or are new or expanded entitlements needed?	☐	☐	☐	☒
e) Result in a determination by the wastewater treatment provider which serves or may serve the Project that it has inadequate capacity to serve the Project's Projected demand in addition to the provider's existing commitments?	☐	☐	☐	☒
f) Be served by a landfill with sufficient permitted capacity to accommodate the Project's solid waste disposal needs?	☐	☐	☒	☐
g) Comply with federal, state, and local statutes and regulations related to solid waste?	☐	☐	☒	☐

IMPACT ANALYSIS

Regulatory Requirements

RR UTL-1 Construction activities on the Project site shall be conducted in compliance with Chapter 20.87 (Construction and Demolition Debris Recycling and Reuse) of the Los Angeles County Code, which requires at least 50 percent of all Construction and Demolition (C&D) debris, soil, rock, and gravel removed from the Project site to be recycled or reused unless a lower percentage is approved by the Los Angeles County Director of Public Works.

Impact Discussion

a) Would the project exceed wastewater treatment requirements of the applicable Regional Water Quality Control Board?

e) Would the project result in a determination by the wastewater treatment provider which serves or may serve the project that it has inadequate capacity to serve the project's projected demand in addition to the provider's existing commitments?

No Impact. The Project would not generate wastewater that would require conveyance or treatment in on-site septic systems or at wastewater plants in the region. As such, the Project

would not result in the need for new or expanded treatment facilities. There would be no impact and no mitigation is required.

b) Would the project require or result in the construction of new water or wastewater treatment facilities or expansion of existing facilities, the construction of which could cause significant environmental effects?

d) Would the project have sufficient water supplies available to serve the project from existing entitlements and resources, or are new or expanded entitlements needed?

No Impact. The Project would require a limited amount water for the control of fugitive dust during localized grading activities; this water would be provided by a water truck on an as-needed basis. Water for dust control would be sourced from municipal water supplies and trucked to the Project site; however, the amount of water would be limited and finite. Operation of the Project would not require any water supplies and would not involve any new landscaping or associated irrigation. Therefore, the Project would not need new water supplies, tanks, pumps, or other water system facilities. There would be no impact and no mitigation is required.

c) Would the project require or result in the construction of new stormwater drainage facilities or expansion of existing facilities, the construction of which could cause significant environmental effects?

Less than Significant with Mitigation. The Project is, itself, the construction of expanded storm water drainage infrastructure, and the environmental effects of the Project are assessed in this IS/MND. As determined in Section 3.1 through 3.17, the Project would result in less than significant impacts with implementation of identified mitigation measures.

f) Would the project be served by a landfill with sufficient permitted capacity to accommodate the project's solid waste disposal needs?

g) Would the project comply with federal, state, and local statutes and regulations related to solid waste?

Less than Significant Impact. Construction of the Project would generate approximately 1.37 million cy of excavated sediment, approximately 614 cy of demolished concrete, and a small amount of other solid waste (e.g., green waste and packaging materials). Exported sediment would be transported to one of the following Vulcan-owned sediment disposal sites for processing and eventual reuse as construction aggregate: Cal Mat Pit, Boulevard Pit, and Sheldon Pit. The LACFCD has coordinated with Vulcan to ascertain that these facilities have the capability to accept and process this volume of sediment in the expected time frame. The demolished concrete and other non-sediment construction waste would be transported to Sunshine Canyon Landfill or recycled. For purposes of this analysis, it is assumed that a total of approximately 1,000 cy of waste would be disposed at Sunshine Canyon Landfill. This would represent approximately 6.1 percent of the landfill's daily permitted throughput of 16,351 cy (12,100 tons) and approximately 0.001 percent of the remaining permitted capacity of 90,870,397 cy (65,785,320 tons), if all waste was disposed on the same day (LACDPW 2015). In reality, this waste would be transported to Sunshine over several days, and, even on one day, does not exceed the available capacity of the facility. Therefore, implementation of the Project would not directly or cumulatively exceed capacity of the Vulcan pits or the Sunshine Canyon Landfill.

All waste generated during construction of the Project would be handled and disposed of in compliance with all applicable federal, State, and local statutes and regulations related to solid waste, including RR UTL-1, which requires at least 50 percent of all C&D debris to be recycled or

reused. Operation of the Project would not generate solid waste. There would be a less than significant impact related to solid waste and no mitigation is required.

MITIGATION MEASURES

There would be no significant impacts related to utilities and service systems; therefore, no mitigation measures are required.

3.18 MANDATORY FINDINGS OF SIGNIFICANCE	**Potentially Significant Impact**	**Less than Significant with Mitigation**	**Less than Significant Impact**	**No Impact**
Does the project:				
a. Have the potential to degrade the quality of the environment, substantially reduce the habitat of a fish or wildlife species, cause a fish or wildlife population to drop below self-sustaining levels, threaten to eliminate a plant or animal community, reduce the number or restrict the range of rare or endangered plant or animal, or eliminate important examples of the major periods of California history or prehistory?	☐	☒	☐	☐
b. Have impacts that are individually limited, but cumulatively considerable? ("Cumulatively considerable" means that the incremental effects of a project are considerable when viewed in connection with the effects of past projects, the effects of other current projects, and the effects of probable future projects)?	☐	☐	☒	☐
c. Have environmental effects which will cause substantial adverse effects on human beings, either directly or indirectly?	☐	☒	☐	☐

MANDATORY FINDINGS OF SIGNIFICANCE ANALYSIS

a) Does the project have the potential to degrade the quality of the environment, substantially reduce the habitat of a fish or wildlife species, cause a fish or wildlife population to drop below self-sustaining levels, threaten to eliminate a plant or animal community, reduce the number or restrict the range of rare or endangered plant or animal, or eliminate important examples of the major periods of California history or prehistory?

Less than Significant Impact with Mitigation. As discussed in Section 3.4, Biological Resources, there are no sensitive biological resources on or near the Project site. There is potential for nesting birds and raptors to be present on and near the Project site; therefore, mitigation has been provided to reduce potential impacts to nesting migratory birds and raptors to less than significant levels (MM BIO-1).The Project would not degrade the quality of the environment; would not substantially reduce the habitat of fish or wildlife species; would not cause a fish or wildlife population to drop below self-sustaining levels; would not threaten to eliminate a plant or animal community; and would not reduce the number of or restrict the range of a Rare or Endangered plant or animal.

As discussed in Section 3.5, Cultural Resources, there would be no impacts to known historic, archaeological, tribal, and/or paleontological resources. Potential impacts to unknown archaeological resources and human remains from implementation of the Project would be less than significant through compliance with RRs CUL-1 and CUL-2. Potential impacts to unknown paleontological resources would be reduced to a less than significant level through implementation of MM CUL-1. Therefore, the Project does not have the potential to eliminate important examples of the major periods of California history or prehistory. If additional measures are agreed to through the AB 52 consultation process, including the requirements in Public Resources Code 21084.3, those measures would be recorded in the Project's MMRP.

b) Does the project have impacts that are individually limited, but cumulatively considerable? ("Cumulatively considerable" means that the incremental effects of a project are considerable when viewed in connection with the effects of past projects, the effects of other current projects, and the effects of probable future projects)?

Less than Significant Impact. As shown in the analysis in Sections 3.1 through 3.17 above, all construction-related impacts would be either less than significant or mitigated to a less than significant level. As demonstrated by the analysis in this IS/MND, there would be no long-term operational impacts because the Project consists of improvements to an existing water conservation facility that would continue operating in a similar manner to existing conditions.

The TIS prepared for the Project includes a compilation of other known development projects in the vicinity of both the Project site and the three Vulcan-owned pits. A total of nine projects are identified, including the Lopez Spreading Grounds Improvement Project also proposed by LACFCD as it was determined there would be partially overlapping haul truck routes and schedules. Because the Project would result in only construction-period impacts, a cumulatively considerable impact could only occur if construction of a related project occurred at the same time as the Project. Of the nine related projects, one project is located within ½ mile of the site and therefore has potential to result in cumulative impacts if constructed at the same time. The proposed St. Ephraim Cathedral near the intersection of Woodman Avenue and Chatsworth Street approximately 0.3 mile northwest of the site at the nearest points. This project was approved by the City in 2011, but remains unbuilt. The proposed Project requires mitigation for biological resources (MM BIO-1), cultural (paleontological) resources (MM CUL-1), noise (MM NOI-1), and traffic (MM TRA-1). The St. Ephraim Cathedral project was processed under a Mitigated Negative Declaration and, as such, this project also would result in no significant and unavoidable impacts with mitigation. Also, this project did not result in impacts to biological resources, cultural resources, or traffic; therefore, these impacts would not be cumulatively considerable. The St. Ephraim project identified noise impacts to adjacent residential properties from operation of the church (City of Los Angeles 2011). The construction-related noise impacts of the Project would be limited to the site and the immediately adjacent vicinity due to the effects of noise attenuation. As such, this impact would not be cumulatively considerable. Therefore, the Project would not result in impacts that are individually limited but cumulatively considerable.

c) Does the project have environmental effects which will cause substantial adverse effects on human beings, either directly or indirectly?

Less than Significant Impact with Mitigation. As shown in the analysis in Sections 3.1 through 3.17 above, the Project would not have environmental effects that could cause substantial adverse effects on human beings, either directly or indirectly. The most likely adverse effect on humans as a result of large-scale earthmoving is due to fugitive dust and diesel particulate emissions, a type of TAC. Dispersion modeling was performed for these pollutant types and concluded there would not be a significant risk to human health at the nearest receptors, and therefore at all surrounding receptors. As discussed in Section 3.8, a Phase II ESA was conducted in the headworks area that indicated lead concentrations in shallow soil samples at locations S-2 and S-3 exceeded the applicable action threshold. LACDPW delineated the extent of impacted soils for eventual exaction and disposal prior to initiation of the Project to ensure that lead adsorbed to soil particles is not inadvertently released into the environment and potentially affect the construction crew or surrounding residents and other receptors. There would be no adverse effects related to lead. Potential adverse noise impacts would be reduced to a less than significant level with implementation of MM NOI-1. The Project would not displace any homes or businesses or divide an established community, and would result in greater long-term water conservation.

This page intentionally left blank

SECTION 4.0 DOCUMENT PREPARERS AND CONTRIBUTORS

4.1.1 LOS ANGELES COUNTY DEPARTMENT OF PUBLIC WORKS

Program Manager .....Ken Zimmer, P.E.
Project Manager ..... John Bodenchak, P.E.
Environmental Project Manager .....Melanie Morita, P.E.

4.1.2 CONSULTANTS

BonTerra Psomas (Environmental Document Preparation)

Principal Manager .....Joan Patronite Kelly, AICP
Senior Project Manager ..... Kristin Starbird
Project Manager ..... Jillian Neary
Cultural Resources Director ..... Patrick Maxon, M.A., RPA
Senior Paleontologist ..... Mark Roeder
GIS/Graphics .....Chris Starbird
Technical Writer/Editor .....Julia Black
Word Processing .....Sheryl Kristal

Chambers Group, Inc. (Biological Technical Report and Cultural Resources Investigation)

Biologist ..... Heather Franklin
Biologist .....Jeremy Smith
Lead Architectural Historian ..... Joel Levanetz, M.A.

Geosyntec Consultants (Phase I and II Environmental Site Assessments)

Principal ..... Eric Smalstig, P.E.
Associate Engineer .....Michael Reardon, P.E.
Engineer .....Zahra Amini, Ph.D.

Linscott, Law & Greenspan Engineers (Traffic Impact Study)

Principal .....Clare Look-Jaeger, P.E.
Senior Transportation Engineer .....Alfred Ying, P.E., PTP

Vista Environmental (Air Quality and GHG Analysis, Health Risk Analysis, Noise Analysis)

Senior Analyst ..... Greg Tonkovich, AICP

This page intentionally left blank

Joan Patronite Kelly, AICP

Principal-in-Charge

EDUCATION

1983 / Master of Urban Planning, California State Polytechnic University, Pomona, CA

1977 / Bachelor of Arts, Social Ecology / University of California, Irvine, CA

REGISTRATION

American Institute of Certified Planners (No. 5078)

Joan Patronite Kelly, AICP is an Urban and Environmental Planner with a geographically diverse background and more than 25 years of experience. Joan specializes in NEPA and CEQA compliance, and has direct experience in the preparation of EISs; EIRs; Environmental Assessments (EAs); land use studies; socioeconomic analyses; and transportation and land use development planning (including permit processing). She also has experience with multi-disciplinary, complex, and controversial projects such as the Centennial Specific Plan and Phase One Implementation EIR; the Aviation Station Transit-Oriented Development; the City of Wildomar, the Jurupa Valley, the City of Eastvale, and the Menifee Valley Incorporation Projects IS/MNDs; and the EIRs for the *Disneyland Resort Specific Plan*, the *Anaheim Resort Specific Plan*, and Anaheim GardenWalk (formerly Pointe Anaheim).

Representative Project Experience

Centennial Specific Plan Environmental Impact Report, Los Angeles County, CA: Project Manager and Principal-in-Charge of this project, which involves the development of a planned new community on approximately 12,000 acres with approximately 15,500 residential units and up to 10 million square feet (sf) of mixed urban service and employment-generating uses in addition to a variety of commercial, industrial, natural open space, and recreational land uses located at the northwestern tip of Los Angeles County along the Kern County border. The project's EIR serves as a Project-level EIR for the Centennial Specific Plan

Anaheim Resort Specific Plan Supplemental Environmental Impact Report, Revalidation Reports, Addenda, Anaheim, CA: Principal-in-Charge for the two Master EIR Revalidation reports and the Supplemental EIR. The most recent project was the EIR, which updated the Anaheim Resort Specific Plan Master EIR by addressing (1) the continued buildout of the Anaheim Resort Specific Plan based on current development, regulations, and technology and (2) the expansion of the Anaheim Convention Center. This Supplemental EIR also evaluates the expansion of the Anaheim Convention Center, including hotels and additional meeting and convention/exhibit hall square footage. In addition, she served as the Project Manager for the original EIR in 1994 for the Anaheim Resort Specific Plan.

Aviation Station Transit-Oriented Development Environmental Impact Report, Los Angeles County, CA: Principal-in-Charge for the preparation of an EIR for a mixed-use, transit-oriented development on approximately six acres located southwest of Interstate (I) 105 and I-405 in unincorporated Los Angeles County and the City of Los Angeles. The project involves the construction of an urban mixed-use development, including 26,500 sf of ground-floor commercial and 393 multi-family residential units. The project also includes (1) the relocation of the Los Angeles County Metropolitan Transportation Authority (Metro's) bus terminal from the southern side of Metro's Green Line Aviation/Los

Angeles International Airport station to the northern side of the station and (2) the reconfiguration of Metro's Park-and-Ride lot, a Caltrans vehicle service lot, and employee parking. The project also involves the de-annexation of property from the City of Los Angeles into the County of Los Angeles.

Cities of Arcadia and Rancho Cucamonga General Plan Updates Environmental Impact Reports, Los Angeles and San Bernardino Counties, CA: Principal-in-Charge for the preparation of Program EIRs for the Cities of Arcadia and Rancho Cucamonga General Plan Updates. The General Plan updates look at ways to accommodate growth in the communities.

Mira Loma Women's Detention Center Environmental Impact Report, County of Los Angeles, CA: Principal-in-Charge of preparing the EIR for the reuse of the Mira Loma Detention Center as a low- to medium-security, female inmate rehabilitation-based detention center that also has transitional housing and re-entry facilities. The EIR will address impacts of rehabilitating the existing buildings; constructing new buildings and site improvements; and relocating female inmates from the Century Regional Detention Facility on all environmental issues.

Prima Deshecha Landfill General Development Plan Amendment Supplemental Environmental Impact Report, Regulatory Planning and Habitat Restoration Services, Orange County, CA: Principal-in-Charge of a three-year, multi-task contract with OC Waste & Recycling. A General Development Plan (GDP) Amendment was prepared to account for a change in the landfill footprint required due to extensive landslide-prone hillsides not accounted for in the earlier GDP or the Habitat Restoration and Mitigation Plan.

Communications Towers California Environmental Quality Act and National Environmental Policy Act Environmental Reviews, Los Angeles County, CA: Principal-in-Charge for an on-call contract with the County of Los Angeles Department of Public Works. Joan is currently working on the environmental clearance documents for four communications towers proposed at scattered locations throughout the Los Angeles County. These four projects include the Bald Mountain New Tower, Hauser Peak New Tower, Rio Hondo New Tower and Communications Equipment Building, and Puente Hills New Tower and Communications Equipment Building. The projects would separately improve communication services for County departments and for the region. An IS/MND for CEQA compliance and an EA for NEPA compliance are being prepared concurrently for each tower project, to tailor the analysis to the different environmental settings and to address the independent requirements under CEQA and NEPA.

Heritage Fields Supplemental Environmental Impact Report and Amended Overlay Plan Addendum, Irvine, CA: Project Manager for an Amended Overlay Plan CEQA Addendum and a Supplemental EIR for this project, which involves addressing the changed plans for development of a Master Planned Community including residential, commercial, research, and educational components. The project surrounds the Great Park in Irvine at the closed El Toro Marine Corps Air Station.

Kristin L. Starbird

Project Manager

EDUCATION

2000 / Master of Public Affairs / University of Texas at Austin, TX

1995 / Bachelor of Social Work / University of Texas at Austin, TX

Kristin Starbird is a Senior Project Manager with years of diverse professional consulting experience, including 13 years as the primary Environmental Services Project Manager for the BonTerra Psomas Pasadena office. Her professional expertise includes the preparation of environmental documents pursuant to CEQA and NEPA; project management for projects with local, State, and federal agency involvement; and public presentations. Kristin is responsible for managing the CEQA/NEPA process for a wide variety of controversial and complex development projects, including general, master, and specific plans; residential tract map developments; flood-control infrastructure projects; mixed-use and transit-oriented developments; solar energy projects in the Antelope Valley; and health care and prison facilities. Her expertise as a Senior Project Manager is exemplified through her management of numerous projects through four On-Call contracts with the Los Angeles County Department of Public Works, as well as through an On-Call contract with the Los Angeles County Chief Executive Office.

Representative Project Experience

Los Angeles County Department of Public Works Environmental Services As-Needed Contracts, Los Angeles County, CA: CEQA/NEPA Project Manager for three On-Call Services contracts with the County of Los Angeles, Department of Public Works (LACDPW), Water Resources Division (WRD), Architectural and Engineering Division (A/E), and Flood Control District (FCD) to provide CEQA and NEPA environmental support services. Under these contracts, Kristin is responsible for coordinating the execution of environmental analyses and for preparing environmental documentation, such as EIRs and MNDs pursuant to CEQA and Environmental Assessments/Findings of No Significant Impact (EA/FONSI) and Categorical Exclusion (CE) pursuant to NEPA, as well as coordinating with responsible and regulatory agencies, as needed. She ensures that work products are completed in a legally defensible manner; in coordination with State and federal agencies; and in accordance with budget and schedule constraints. Under these contracts, she has worked on the following projects: the Big Tujunga Reservoir Sediment Removal Project MND and EA; the High Desert Health System Multi-Service Ambulatory Care Center EIR; the Santa Anita Stormwater Flood Management and Seismic Strengthening Project MND; and the Camp Kilpatrick Replacement Mitigated Negative Declaration.

Aviation Station Transit-Oriented Development Environmental Impact Report, Los Angeles County, CA: Project Manager for the preparation of an EIR for a mixed-use, transit-oriented project on 5.9 acres located in unincorporated Los Angeles County and the City of Los Angeles near the intersection of Interstate (I) 105 and I-405. The project involves the demolition of existing land uses and the construction of an urban mixed-use development that will include 29,500 square feet (sf) of ground-floor

commercial and 390 multi-family residential units. The project would relocate the Los Angeles County Metropolitan Transportation Authority (Metro) bus terminal from the southern side of Metro's Green Line Aviation/Los Angeles International Airport station to the northern side of the station. The project involves multiple stakeholders, including Metro and Caltrans District 7, and will require the de-annexation of property from the City of Los Angeles into the County of Los Angeles. The project will also require the reconfiguration of the Caltrans Park-and-Ride lot, a Caltrans vehicle service lot, and employee parking to accommodate project design. Project entitlements include a General Plan Amendment, a Conditional Use Permit, and a zone change.

Mira Loma Women's Detention Center Project Environmental Impact Report, City of Lancaster, CA: Project Manager for this EIR for the Mira Loma Women's Detention Center (MLDC) Project located in the City of Lancaster on property owned by Los Angeles County. The project involves the partial demolition and redevelopment of the existing 37-acre MLDC for the development of a 1,600-bed medium-security, rehabilitation-based, female inmate detention facility with a 50-bed medical clinic and appurtenant facilities. Several existing structures would remain and be incorporated into the project through rehabilitation, while several other buildings would be demolished and rebuilt. The campus-style setting would maximize rehabilitative, educational, and vocational opportunities to reduce recidivism and associated long-term detention costs. Areas of special consideration include water supply, historic resources, land use and planning, and traffic.

West Antelope Solar Project Mitigated Negative Declaration, County of Los Angeles, CA: Project Manager for the CEQA documentation for the West Antelope Solar Project located in unincorporated Los Angeles County, just outside the western boundaries of the City of Lancaster. The project site consists of approximately 263 acres that would be developed with a solar energy facility to produce up to 20 megawatt alternating current (MWac) of renewable electric power. The electricity generated by the project would be transmitted to Southern California Edison's (SCE) nearby Antelope Substation located at 95th Street West and West Avenue J. An off-site grid-tie transmission line (Grid-Tie) would run east from the Project site for approximately 1.5 miles to the Antelope Substation. The project is expected to be in operation for at least 20 years or longer if it remains economically viable. At the end of the economically useful life of the project, the property will be restored in accordance with County requirements and an approved Reclamation Plan. This project required an expedited schedule and coordination with the CDFW regarding potential impacts to the Swainson's Hawk and burrowing owl. Areas of special consideration include public controversy and local opposition to solar facilities; soil disturbance and fugitive dust; cumulative impacts regarding the loss of open space and foraging habitat for wildlife; and aesthetics and compatibility with rural land uses.

Jillian K. Neary

Environmental Planner

EDUCATION

1997 / Bachelor of Arts, Geology / Indiana University-Purdue University at Indianapolis, IN

Jillian K. Neary is an Assistant Project Manager with over 15 years of experience in environmental analysis and land use investigation, including 12 years in the preparation of environmental compliance documents pursuant to CEQA, NEPA, and associated State and federal regulations for both private- and public-sector clients throughout Southern California. Additionally, Jillian has performed subsurface investigations, underground storage tank removals, and prepared Phase I and Phase II Environmental Site Assessments for over 40 sites in central Indiana. She is versed in evaluating the potential for environmental impacts on all CEQA topics, providing particular expertise in aesthetics, agriculture resources, geology and soils, hazardous materials, and natural resources.

Representative Project Experience

Centennial Specific Plan Environmental Impact Report, Los Angeles County, CA: Environmental Analyst who assisted in the preparation of the Centennial Specific Plan Draft EIR for a planned new community on approximately 12,374 acres located at the northwestern tip of Los Angeles County. She is managing preparation of the geotechnical, hazards, fire safety, land resources, noise, visual resources, parks and recreation, dry utilities, and all public service analyses. Jillian has also contributed to the preparation of the Project Description, Alternatives, and Cumulative Impacts sections.

University of California, Los Angeles Conference and Guest Center Project Environmental Impact Report, City of Los Angeles, CA: Assistant Project Manager in the preparation of a Tiered EIR for the Meyer and Renee Luskin Conference and Guest Center Project. For this project, Jillian was responsible for or assisted in preparation of the 11 environmental topics addressed in the EIR (aesthetics, air quality, biological resources, cultural resources, geology and soils, greenhouse gas emissions, hydrology and water quality, land use and planning, noise, traffic, and utilities); contributed to the development of project alternatives; and prepared the alternatives analysis.

University of California, Los Angeles Capital Programs On-Call Contracts, City of Los Angeles, CA: Assistant Project Manager or Environmental Analyst on various projects under the On-Call Contract with the University of California, Los Angeles (UCLA). Projects for which she was the Assistant Project Manager and primary author or prepared sections include: 2008 Northwest Housing Infill Project and Long Range Development Plan Amendment EIR, Pauley Pavilion Renovation and Expansion IS/MND, Weyburn Terrace Graduate Student Housing IS/MND, Wasserman Building Project (medical office) IS/MND, Engineering VI-Phase 1 Building IS/MND, Teaching and Learning Center Building IS/MND, Meyer and Renee Luskin Conference and Guest Center Project EIR, Glenrock and Landfair Apartments Project IS/MND, Stuart House Replacement Project IS/MND, Football

Performance Center IS/MND, Engineering VI-Phase 2 Building IS/MND, and Basketball Practice Facility IS/MND.

Camp Vernon Kilpatrick Replacement Project Initial Study/Mitigated Negative Declaration, County of Los Angeles, CA: Project Manager and Primary Author for the preparation of an IS/MND for the Camp Vernon Kilpatrick Replacement project. This project involved extensive coordination with the County team on defining the project parameters and strategy for the IS/MND to best accommodate the County's design-build approach. Key environmental issues include sensitive biological resources and impacts on adjacent Camp Miller residents.

Aviation Station Transit-Oriented Development Environmental Impact Report, Los Angeles County, CA: Environmental Analyst who assisted with the preparation of an EIR for a mixed-use, transit-oriented project on 5.9 acres located in unincorporated Los Angeles County and the City of Los Angeles, near the intersection of Interstate (I) 105 and I-405. For this project, she managed the distribution of the Notice of Preparation (NOP) on behalf of the County; assisted in all topical analysis and other aspects of Draft EIR preparation; and assisted in preparing the Final EIR documentation.

Beach and Orangethorpe Mixed-Use Specific Plan Environmental Impact Report, Buena Park, CA: Environmental Analyst who assisted with the preparation of an EIR for a mixed-use infill redevelopment project in Buena Park. She prepared the aesthetics, air quality, climate change, cultural resources, geotechnical, hazards, hydrology, land use, public services, and utilities EIR analyses; she also prepared all CEQA notices and assisted in preparing the Final EIR documentation.

St. Michael's Abbey Environmental Impact Report, Unincorporated Orange County, CA: Environmental Analyst who assisted in the preparation of an EIR for the St. Michael's Abbey Project. Jillian prepared the agriculture and forestry resources, geology and soils, hazards, land use and planning, mineral resources, population and housing, public services, and utilities analyses; contributed to Response to Comments; and prepared the Findings of Fact and Statement of Overriding Considerations documentation.

High Desert Health System Multi-Service Ambulatory Care Center Environmental Impact Report, Lancaster, CA: Environmental Analyst who assisted in the preparation of an EIR for the High Desert Health System Multi-Service Ambulatory Care Center (HDHS MACC). For this project, she prepared the aesthetics, geotechnical, hazardous materials, public services, and utilities analyses; managed outreach to affected public services and utilities; contributed to the project description and alternatives analysis; and assisted in preparing the Final EIR documentation.

Fullerton Transportation Center Specific Plan Project Environmental Impact Report, Fullerton, CA: Environmental Analyst who assisted in the preparation of an EIR for the Fullerton Transportation Center Specific Plan project on approximately 39 acres located within and adjacent to the City of Fullerton's Central Business District. She prepared the aesthetics, geology and soils, hydrology and water quality, utilities, and long-term impacts analyses, including review of supporting technical documentation for accuracy and completeness.

Patrick O. Maxon, M.A., RPA

Cultural Resources Director

EDUCATION

1994 / Master of Arts, Anthropology / California State University, Fullerton, CA

1987 / Bachelor of Arts, Psychology/Sociology / Towson State University, Towson, MD

PROFESSIONAL REGISTRATIONS/ CERTIFICATIONS

Registered Professional Archaeologist (National) (No. 11468), 1999–present

Riverside County Transportation & Land Management Agency Certified Archaeologist, 2008

California Energy Commission Cultural Resources Specialist, 2004

Orange County Certified Archaeologist, 1998

Patrick O. Maxon, M.A., RPA, has 20 years of experience in all aspects of cultural resources management, including prehistoric and historic archaeology, paleontology, ethnography, and tribal consultation. He has expertise in compliance with NEPA, CEQA, the National Historic Preservation Act (NHPA), the Archaeological Resources Protection Act, and the Clean Water Act, among others. Mr. Maxon meets the Secretary of Interior's standards for historic preservation programs for archaeology. He has completed hundreds of cultural resources projects that have involved a full range of cultural resources services. He has managed a number of projects within the jurisdiction of the USACE, the Bureau of Land Management, the Bureau of Reclamation, and other federal agencies that require compliance with Section 106 of the NHPA. He has also completed projects throughout Southern California under CEQA for State and local governments and municipalities, including Caltrans, the Department of General Services, the California Energy Commission, the California Department of Water Resources, the Los Angeles County Department of Public Works, and others.

Representative Project Experience

Centennial Specific Plan Project Cultural Resources Surveys, Los Angeles County, CA: Cultural Resources Director for this project. He manages the review, evaluation, and mitigation of cultural resources. He conducted records searches for archaeological and paleontological resources and completed an intensive pedestrian survey for an off-site impact area along State Route (SR) 138 (just south of the project site) to evaluate the project area for the presence of cultural and paleontological resources. Numerous cultural resources sites were discovered, and some were evaluated for significance; those that were determined eligible and were in the development area were preserved in place.

Newport Banning Ranch Cultural Resources Services, Newport Beach, CA: Cultural Resources Director for this project. He conducted archaeological, historical, and paleontological investigations to support the project's EIR. The investigation consisted of (1) a Phase II test-level excavation of eight prehistoric and three historic archaeological sites present on the site; (2) an assessment and evaluation of the built-environment resources associated with the West Newport Oil Company development on site; and (3) a paleontological assessment of the project site's potential for the presence of sensitive rock formations and fossil resources.

Atlanta Avenue Widening Project Historic Property Survey Report/Extended Phase I Study, Huntington Beach, CA: Project Manager for this project. He conducted a Phase I cultural resources study to evaluate the potential effects of the project on cultural resources. The initial work included consultation with Caltrans cultural resources specialists regarding the Area of Potential Effects (APE); a cultural resources literature review; Native American consultation; a field survey of the project area; and submittal of an Archaeological Survey Report

(ASR) and a Historic Property Survey Report (HPSR) to Caltrans. After further consultation with Caltrans, Patrick directed the historic evaluation of the Pacific Mobile Home Park south of the site and completed an Extended Phase I study that consisted of subsurface archaeological excavation to evaluate the presence of archaeological resources within the APE.

Baker Ranch Development Project Archaeological Investigations, Lake Forest, CA: Cultural Resources Manager for this project. After completing a Phase I reconnaissance study and Phase II testing of two archaeological sites on the project site, Patrick managed the implementation of the Mitigation Monitoring and Reporting Program adopted for the project. It includes Archaeological, Native American, and Paleontological monitoring programs to be instituted during grading of the project site. Much of the site is underlain by the late Miocene to early Pliocene Epoch Oso Sand Member of the Capistrano Formation, which is one of the most prolific fossil-bearing units in Orange County. Numerous fossil localities (including various bones associated with whales, a seal, sharks, and fishes, as well as plant remains and invertebrates) have been found and continue to be found during grading at the site.

Centennial Corridor Project Environmental Impact Report/Environmental Impact Statement, Bakersfield and Kern County, CA: Cultural Resources Project Manager for this project, which is part of the Thomas Roads Improvement Program (TRIP). As part of the EIR/Environmental Impact Statement that is being prepared for the Centennial Corridor portion of the TRIP, Patrick consulted with Caltrans and TRIP representatives; examined the cultural resources literature review and Native American consultation data previously compiled for the area; and conducted a pedestrian archaeological survey of the proposed routes and alternatives. An ASR was produced to describe this work. A Historic Resource Evaluation Report (HRER) was also completed for the historical investigation. The ASR and HRER were included in the final HPSR from which Caltrans planning decisions will be made.

St. Michael's Abbey Project Cultural Resources Analysis, Unincorporated Orange County, CA: Cultural Resources Project Manager who completed a Phase I cultural resources study designed to identify, evaluate, and develop appropriate mitigation measures for any significant cultural resources present on the project site. The study consisted of cultural and paleontological resources records searches and literature reviews; Native American consultation; field surveys; and consideration of resources on site. The project site is sensitive because of the presence of prehistoric resources, fossil resources, and remnants of the historic Holz Ranch, some of whose buildings still stand on the site. It was determined that the known archaeological resource, a bedrock mortar, will be preserved in place in an area that will not be developed.

Mark Roeder

Senior Paleontologist/Principal Investigator

EDUCATION

1977 / Bachelor of Arts, Anthropology / San Diego State University, CA

PROFESSIONAL REGISTRATION

Registered Paleontologic Consultant, County of Orange

Mark Roeder has 38 years of experience as a Paleontologist. Mark has extensive experience with CEQA and NEPA compliance and with conducting and managing paleontological resource impact assessments and impact mitigation programs for large construction projects in California. Project experience includes municipal solid waste landfills; aggregate quarries; flood-control facilities; oil refineries; natural gas pipelines; freeways and other roadways; subways; waste water treatment facilities; housing developments; planned communities; office buildings/complexes; shopping centers; hospitals and medical centers; industrial complexes; parking lots/structures; land exchanges; and conditional use permit and specific plan revisions. He has worked for a diverse set of clients including private-industry clients; public utilities; conservancies; and federal, State, County, City, and regional agencies. Mark has conducted paleontological resource assessments—which involve data searches such as literature reviews, archival searches, field surveys, and consultation with other paleontologists—in order to develop baseline inventories to evaluate the scientific importance of resources and potential for disturbance by adverse, project-related impacts; and to formulate mitigation measures to reduce these impacts to less than significant levels. Mark has worked on paleontological resources impact mitigation programs that have required monitoring of earth-moving activities, recovery of fossil remains, field personnel supervision, and progress and final report preparation. His previous project participation has involved extensive coordination and consultation with project proponents, other consulting firms, and permitting agencies; adherence to strict delivery schedules; and completion of tasks within specified budget limits. Mark also has an extensive paleontological research background in the fish faunas of the Cenozoic marine and lacustrine formations of Southern California. His research entailed literature reviews, archival searches, field surveys, and consultation with other paleontologists.

Experience

Baker Ranch Development Project Archaeological Investigations, Lake Forest, CA: Paleontological Resources Principal Investigator for Baker Ranch Project. The project includes Archaeological, Native American, and Paleontological monitoring programs completed during grading of the project site. Much of the site is underlain by the late Miocene to early Pliocene Epoch Oso Sand Member of the Capistrano Formation, which is one of the most prolific fossil-bearing units in Orange County. Hundreds of fossil localities (including various bones associated with, among others, whales, seals, sharks, dolphins, walrus, and fishes, as well as plant remains and invertebrates) were found by BonTerra Psomas monitors during grading at the site. Mr. Roeder oversaw paleontological investigations on site and in the laboratory and assisted as necessary with identifying and evaluating fossils; salvaging larger specimens; and providing oversight and assistance to the field monitors.

Newport Banning Ranch Paleontological Assessment, Newport Beach, CA: Senior Paleontologist and Principal Investigator for this project. The Newport Banning Ranch project would allow for the development of up to 1,375 residential dwelling units; 75,000 square feet of commercial uses; a 75-room resort inn; and approximately 52 acres of public parks on a 401-acre site. Mark completed the paleontological assessment and wrote the paleontological technical report in order to determine the project site's potential for the presence of sensitive rock formations and fossil resources. The paleontological significance of the project site was deemed "high. Future paleontological work will include an intensive site survey, sampling of fossil outcrops, preservation of some outcrops (if possible), and monitoring of construction activities.

Sunset Ridge Park Paleontological Assessment, Newport Beach, CA: Senior Paleontologist and Principal Investigator for this project. Located on the northwestern corner of Superior Avenue and West Coast Highway, the approximate 13.7-acre site, located within the Coastal Zone, was developed with active and passive recreational uses. Mark wrote the paleontological assessment in order to determine the project site's potential for the presence of sensitive rock formations and fossil resources. The paleontological significance of the project site was deemed "high". In January 2014, Mr. Roeder supervised paleontological work which included an intensive site survey, sampling of fossil outcrops,monitoring of construction activities for the park, wet screening of sediment samples. The treatment of the fossils recovered during monitoring and screening is currently underway, and documentation by technical report is pending.

Eastern Transportation Corridor (State Route 241) Project, Orange County, CA: Senior Paleontologist for this project. He supervised the paleontologist resource monitoring and collection of fossil samples during construction activities. Also, he was involved in the treatment and documentation of the fossils.

Murrieta Creek Bridge Cultural Resources Services, City of Temecula, CA: Paleontologist for this project, which consisted of the construction of a new bridge over Murrieta Creek at Overland Drive from its current terminus near Commerce Center Drive. Mark was the Senior Paleontologist for the project. The study consisted of (1) paleontological records and literature searches; (2) paleontological pedestrian survey of the project site; and (3) paleontological technical report describing the results of the study and recommended mitigation measure for any potential impacts to resources. Mark found that near the western abutment for the proposed bridge in a natural exposure at the base of the bluff just above the current base level for the creek is a two- to three-foot-thick fossil root-cast bearing, brown, silt bed. This horizon may be Late Pleistocene age and is approximately 13 to 15 feet below the grade of the surface roads on either side of the creek. Root casts noted during the survey are considered paleontological resources and indicate there is a potential for significant paleontological resources during earth-moving activities in this area. The potential for destruction of paleontological resources due to depth excavations during construction is high and monitoring was recommended.

Christopher Starbird

GIS Manager

EDUCATION

2003 / Bachelor of Arts, Geography / University of California, Santa Barbara, CA

Christopher Starbird is a Geographic Information Systems (GIS) Specialist and Database Manager with 11 years of experience. Mr. Starbird has assisted in the completion of mapping projects for municipal, regional, and federal public agencies and non-profit organizations using the latest in mapping software from the Environmental Systems Research Institute (ESRI). His set of skills includes database design, spatial analyses, three-dimensional (3D) modeling with shade and shadow analysis, web development, and high quality cartographic design to meet client and project needs. He has completed course work in the areas of GIS, cartography, field techniques in geographic research, web-based interactive map presentation, and digital imaging.

Experience

Centennial Corridor Project Draft Environmental Impact Report/Environmental Impact Statement and Section 4(f) Evaluation, Kern County, CA: Lead GIS Specialist on the Centennial Corridor Project Draft EIR/Environmental Impact Statement, the purpose of which is to provide continuity for traffic using State Route 58 in Kern County. His responsibilities include the coordinating of digitization, data management, and spatial analysis of these various resources and project components as well as the production of over a hundred maps and graphics that accompany the report.

Tehachapi Renewable Transmission Project Segments 4–11, Los Angeles County, CA: GIS Specialist for Segments 4 through 11 of Southern California Edison's (SCE's) Tehachapi Renewable Transmission Project (TRTP). The TRTP will assist in meeting the State of California's Renewable Portfolio Standards requirements. Christopher coordinates the data collection and mapping of various field surveys and manages the production of many report graphics and exhibits. He also pioneered the use of low-cost, modern tablet computing technology to reduce the use of paper field maps used during surveys, which also significantly increased the field personnel's ability to navigate the project site and collect data.

Centennial Specific Plan Project Environmental Impact Report and Biological Technical Report Geographic Information Systems Services, Los Angeles County, CA: Primary GIS Specialist for the Centennial Specific Plan Project, which involves the development of approximately 12,374 acres with residential units mixed urban service and employment-generating uses in addition to a variety of commercial, industrial, natural open space, and recreational land uses. Christopher has performed GIS analyses and produced exhibits for the EIR and its supporting Biological Technical Report. He developed and consolidated GIS, AutoCAD, and other data from numerous public and private agencies for use in analysis and cartographic products.

Los Angeles County Department of Public Works California Environmental Quality Act Compliance Strategy for Maintenance of 166 Debris Basins, Los

Angeles County, CA: GIS Specialist for this project. He created a database of geographic data on each of the 166 County of Los Angeles Department of Public Works debris basins to determine estimated impacts and to establish an ongoing digital resource that could be used to assist with the future management of debris basin maintenance activities.

The Ranch Plan Environmental Impact Report Geographic Information Systems Services, Orange County, CA: GIS Specialist for the Ranch Plan Program EIR. As proposed, the Ranch Plan would allow for the development of a 22,815-acre project site with 14,000 residential dwelling units (including 6,000 senior housing units); 3.5 million square feet (sf) of urban activity uses; 0.5 million sf of neighborhood center uses; and 1.2 million sf of business center uses. Christopher performed mapping and analysis of vegetative and sensitive species; assisted in Computer Aided Design data acquisition and conversion for use in impact calculation; and developed an interactive CD-ROM application for the digital version of the Ranch Plan EIR.

Newport Banning Ranch Environmental Impact Report, Newport Beach, CA: Primary GIS Specialist for the Newport Banning Ranch EIR. The Newport Banning Ranch project would allow for the development of 1,375 residential dwelling units; 75,000 sf of commercial uses; a 75-room resort inn; and approximately 51 acres of public parks on a 401-acre oilfield site. Christopher coordinated and performed the GIS mapping and analysis of the project site and developed and consolidated GIS, AutoCAD, and other data from numerous public and private agencies for use in analysis and cartographic products. He also coordinated data collection, which involved the use of sub-foot accuracy Global Positioning System (GPS) equipment along with post-processing to produce hyper-accurate spatial data.

OC Waste & Recycling Prima Deshecha Landfill Supplemental Environmental Impact Report Geographic Information Systems Services, Orange County, CA: GIS Specialist for the Prima Deshecha Landfill Supplemental EIR. The Supplemental EIR includes updated analyses of biological resources present on the project site; revised hydrology and drainage data; and project-specific information to assess the physical site's stability to address the landslide complexes, to accommodate future landfill-related support features, and to address adjustments to Phase 4 that would improve drainage and avoid sensitive biological resources. Christopher performed analyses; produced exhibits for the project; calculated revised impacts; and modeled mitigation strategies for permitting.

Puente Hills Preserve Vegetation Mapping and Geographic Information Systems Services, Los Angeles County. GIS Specialist who mapped vegetation and digitized the 4,000-acre Puente Hills preserve. He produced multiple large-scale products (including posters and mounted wall exhibits) and developed an interactive CD-ROM application to depict biological resources. The vegetation maps produced were at a scale of 1 inch equals 200 feet (1″=200′) with a 1-inch overlap between map sheets. The project site was divided into 19 quadrangles with a map index, and each quadrangle map was photo-quality printed, laminated, and mounted. All GIS files were formatted for ArcView 8.x and provided on disc.

Julia R. Black

Technical Writer/Editor

EDUCATION

1999 / Bachelor of Arts, English, California State University, Fullerton, CA

Julia R. Black is a Technical Writer and Editor with more than 15 years of experience editing and writing documents, including 8 years as the lead Technical Editor and Writer at BonTerra Psomas. As Technical Editor and Writer at BonTerra Psomas, Julia helped to create the BonTerra Psomas Style Guide and streamlined the way BonTerra Psomas presents references and the administrative record. She currently edits most of BonTerra Psomas' documents and ensures that they are grammatically correct; free from ambiguity; formatted consistently; are lay-reader friendly; and have correct references and citations. She also assists in writing and editing articles for the company website and in summarizing sections for environmental documents.

Project Responsibilities

Document Preparation: At the beginning of a project, Julia creates a template for environmental documents so that documents have consistent formatting. This helps to ensure that large environmental documents look the same throughout, regardless of who writes each individual section.

Editing: Julia edits environmental documents and technical reports and ensures that they are grammatically correct, free from ambiguity, and formatted consistently. She checks to make sure terminology and technical information is consistent throughout the document and in other BonTerra Psomas-prepared technical reports. As part of this, she ensures discussions are organized logically, and that analysis is friendly to the lay reader. She also ensures that exhibits are free from typographical and grammatical errors, if appropriate.

References and the Administrative Record: Julia ensures references sections are complete, and that documents listed in the references section are organized. This ensures that they are easily accessible during a public review period and/or after a document has been challenged.

Addressing Comments/Edits: Julia assists in compiling and addressing comments from clients and lead agencies. She does this by creating comment matrices, if necessary, and by addressing whether each comment was incorporated into the document; by making changes in the document; and by ensuring that, if a change is made in one section, it gets made in all sections where that topic is discussed.

Representative Project Experience

Big Tujunga Dam Sediment Removal Project, Focused Biological Surveys, Mitigated Negative Declaration, Environmental Assessment, Biological Assessment, Biological Evaluation, and Management Indicator Species Report, Angeles National Forest, Los Angeles County, CA: Technical Editor for the Big Tujunga Dam Sediment Removal project. The project proposes removal of sediment that has built up behind the dam. Focused surveys and reports were completed for special status plants, special status fish (Santa Ana sucker, Santa Ana speckled dace, arroyo chub), and special status herpetofauna (arroyo toad, red-legged frog, mountain

yellow-legged frog, western pond turtle). An MND was prepared in accordance with CEQA and an Environmental Assessment (EA) was prepared in accordance with NEPA. A Biological Assessment (BA) was prepared to assess the effect of the project on the Santa Ana sucker and arroyo toad and their critical habitat to support the Section 7 Consultation for the Project. In addition, a Biological Evaluation (BE) was prepared to assess the effect on U.S. Forest Service (USFS) Sensitive species, and a Management Indicator Species (MIS) Report was prepared pursuant to USFS guidelines. Julia edited all above-mentioned documents for grammar and punctuation mistakes; ensured there was no ambiguity within and among the documents and mitigation measures; and assisted in compiling and organizing the References Sections for all documents.

Newport Banning Ranch Environmental Impact Report and Biological Resources Services, Newport Beach,CA: Technical Editor for the Newport Banning Ranch Project. The Newport Banning Ranch project would allow for the development of 1,375 residential dwelling units; 75,000 square feet of commercial uses; a 75-room resort inn; and approximately 51 acres of public parks on the 401-acre active oilfield site. An EIR was prepared to analyze impacts to the proposed project, and BonTerra completed the EIR and the following technical reports to support it: an Air Quality Technical Report, a Climate Change Technical Report, a Noise Impact Analysis, an Archaeological Resources Report, a Paleontological Resources Assessment, and a Biological Technical Report. To support the Biological Technical Report, BonTerra also completed focused surveys and reports for burrowing owl, coastal California gnatcatcher, special status plants, and southwestern willow flycatcher and least Bell's vireo. Julia edited the EIR and all above-mentioned supporting technical documents. As part of this effort, she checked all seven documents and four focused survey reports for grammar and punctuation; ensured consistency within each document and among all documents; and compiled the administrative record.

Centennial Corridor Project Environmental Impact Report/Environmental Impact Statement, Bakersfield and Kern County, CA: Technical Editor for the Centennial Corridor project's environmental documentation. The project would extend State Route (SR) 58 from its current terminus at SR-99 to provide an ultimate connection to Interstate (I) 5, a distance of approximately 16 miles. The project involves Project Initiation Documents and the preparation of an EIR/EIS). The project has been divided into three segments for purposes of evaluation and implementation phasing. A full range of technical studies were prepared to support the EIR/EIS. Julia edited all project-related documents for grammar and punctuation mistakes; ensured there was no ambiguity within the document or mitigation measures; and assisted in compiling and organizing the References Sections. Additionally, she ensured each document was prepared in accordance with the standards set by Caltrans for environmental documents and checked the document against the requirements for Caltrans' NEPA Delegation Program.

Sheryl Kristal

Word Processor

EDUCATION

General Studies with a focus on Graphic Design / Golden West College, Huntington Beach, CA

CERTIFICATIONS

Microsoft Office Specialist, Office Word 2007 (February 2013)

AWARDS

2014 Psomas Excellence in Service

Sheryl A. Kristal is Word Processor with more than eight years of experience word processing documents. As Word Processor at BonTerra Psomas, Ms. Kristal creates custom templates in Microsoft Word for projects and proposals. Her work with the California Department of Transportation (Caltrans) has allowed her to create Microsoft Word documents that comply with Section 508 of the U.S. Rehabilitation Act which allow accessibility to users with disabilities. She also creates and edits documents and graphics to meet client and project needs using a variety of software including Adobe PhotoShop, Adobe InDesign, Adobe Illustrator, and Adobe Acrobat Professional. Using Acrobat, Sheryl creates user-friendly single PDFs which are bookmarked for ease of navigation, or more complicated Packaged PDFs with bookmarking for documents of more than 4,000 pages in length.

Project Responsibilities

Document Processing: Sheryl works to ensure that all sections of a document are formatted consistently and look the same throughout, regardless of who wrote each individual section. She prepares each document for publication and works closely with outside printing houses to ensure that all documents for distribution are produced at the highest quality.

Moving toward sustainability, Sheryl has worked to streamline the document preparation process by using more electronic file options as opposed to printing large and small documents.

Representative Project Experience

Big Tujunga Dam Sediment Removal Project Focused Biological Surveys, Mitigated Negative Declaration, Environmental Assessment, Biological Assessment, Biological Evaluation, and Management Indicator Species Report, Angeles National Forest, Los Angeles County, CA: Word Processor for the Big Tujunga Dam Sediment Removal project. The project proposes removal of sediment that has built up behind the dam. Focused surveys and reports were completed for special status plants, special status fish (Santa Ana sucker, Santa Ana speckled dace, arroyo chub), and special status herpetofauna (arroyo toad, red-legged frog, mountain yellow-legged frog, western pond turtle). An MND was prepared in accordance with CEQA and an Environmental Assessment (EA) was prepared in accordance with NEPA. A Biological Assessment (BA) was prepared to assess the effect of the project on the Santa Ana sucker and arroyo toad and their critical habitat. In addition, a Biological Evaluation (BE) was prepared to assess the effect on U.S. Forest Service (USFS) Sensitive species, and a Management Indicator Species (MIS) Report was prepared pursuant to USFS guidelines. Sheryl formatted all above-listed documents to be visually consistent and created the finished products for distribution.

Newport Banning Ranch Environmental Impact Report and Biological Resources Services, Newport Beach, CA: Word Processor for the

Sheryl Kristal (Continued)

Newport Banning Ranch Project, which would allow for the development of 1,375 residential dwelling units; 75,000 square feet of commercial uses; a 75-room resort inn; and approximately 51 acres of public parks on the 401-acre oilfield site. BonTerra completed the EIR and the following technical reports to support the EIR: an Air Quality Technical Report, a Climate Change Technical Report, a Noise Impact Analysis, an Archaeological Resources Report, a Paleontological Resources Assessment, and a Biological Technical Report. To support the Biological Technical Report, BonTerra also completed focused surveys and reports for burrowing owl, coastal California gnatcatcher, special status plants, and southwestern willow flycatcher and least Bell's vireo. Sheryl formatted the EIR and all above-mentioned supporting technical documents. As part of this effort, she finalized all seven documents and four focused survey reports for publication including the compilation of a fully searchable and functional PDF.

Centennial Corridor Project Environmental Impact Report/Environmental Impact Statement, Bakersfield and Kern County, CA: Word Processor for the Centennial Corridor project, which would extend State Route (SR) 58 from its current terminus at SR-99 to provide an ultimate connection to Interstate (I) 5, a distance of approximately 16 miles. The project involves Project Initiation Documents and the preparation of an EIR/EIS. A full range of technical studies were prepared to support the EIR/EIS. As an advanced user of Microsoft Word, Sheryl's responsibilities include formatting the environmental documentation and a majority of the technical reports so that they are accessible to users with disabilities using alternative text and assistive technology. Alternative text helps people who use screen readers to understand the content of images (e.g., exhibits) in a document. To make these documents accessible, Sheryl typed in descriptions for over 250 EIR/EIS and technical report exhibits so that people who use screen readers will then hear these descriptions as they scan a document.

Santa Anita Stormwater Management and Seismic Strengthening Project Biological Technical Report, Focused Biological Surveys, Mitigated Negative Declaration, Biological Assessment/Biological Evaluation, Management Indicator Species Report, Arcadia and Angeles National Forest, CA: Word Processor for the project, which would modify Santa Anita Dam, the Headworks facility, and the Debris Dam to strengthen them and to automate operations. Focused surveys and reports were completed for special status plants, special status fish (Santa Ana sucker, arroyo chub, Santa Ana speckled dace), special status herpetofauna (Coast Range newt, Pacific [western] pond turtle, silvery legless lizard, two-striped garter snake), coastal California gnatcatcher, least Bell's vireo, southwestern willow flycatcher, and roosting bats. Additionally, a Biological Resources Report was prepared to describe existing conditions; a Biological Technical Report was prepared to evaluate impacts of the proposed project; an MND was prepared to assess the project's impacts in accordance with CEQA; a BA/BE was prepared to evaluate impacts on listed and USFS Sensitive species; an MIS Report was prepared, consistent with guidelines from the USFS for the Dam portion of the Project, which is located within the Angeles National Forest. Sheryl formatted all above-listed documents to be visually consistent and created the finished products for distribution.

Geosyntec consultants

ERIC SMALSTIG, P.E. **site assessments and environmental engineering**
Senior Principal **multi-discipline projects management**
remediation system design/construction management

EDUCATION

Texas A&M University, Construction Management, 1997 (non-degree program)
Bucknell University: B.S., Civil Engineering, 1991
Bucknell University: B.A., Spanish, 1991

PROFESSIONAL REGISTRATION

Professional Engineer - Civil, State of California, C056128
Certified Permitting Professional, South Coast Air Quality Management District, A1520
Qualified SWPPP Developer

REPRESENTATIVE EXPERIENCE

Mr. Smalstig is a Registered Professional Engineer with 25 years of experience in environmental engineering including groundwater and vadose zone investigation and remediation, and surface water resource protection experience. Mr. Smalstig is a Senior Principal within Geosyntec's employee-owned global family of companies, and he manages several departments within Geosyntec Consultants Huntington Beach, California, office. Experience includes:

- AAI-compliant environmental site assessments (Phase I and II ESAs);
- conceptual site model development;
- existing resources protection;
- remediation option investigation and treatment feasibility;
- treatment system cost estimating;
- treatment system design and construction;
- data systems management;
- regulatory negotiation and permitting;
- system performance monitoring, optimization, operation and maintenance.

Recent/relevant or on-going project experience is highlighted below.

Orange County, California: Mr. Smalstig provides the OC Waste & Recycling and OC Parks with on-call technical support related to site assessment and regulatory issues at all of their parklands and waste management units in Orange County, California (i.e., active and closed landfills, household hazardous waste collection centers, appurtenant facilities). His technical support role has encompassed the following tasks:

- Site assessments of existing properties, as well as potential acquisitions;
- Site visits to inventory potential contaminant sources and development of Best Management Practices (BMPs) to control potential releases; and
- Training (classroom and in-field) County personnel on the site assessment process, site control and BMPs, and environmental regulations.

Mr. Smalstig was also the lead engineer providing assistance to OC Parks in performing emergency post-fire response following the wildfires that burned approximately 9,000 acres of County land in 2007. This task involved training of emergency assessment crews to assess burn area damage and design hydraulic and erosion control mitigation measures to protect County and adjacent property-owner structures.

Lehigh Cement Company Cement Kiln Dust Sites, United States – These projects have included site assessment, remediation planning, treatability studies, pilot-scale in situ groundwater treatment system design and installation, pilot-scale in situ system operation and monitoring, feasibility study analyses, and design of the full-scale groundwater treatment systems to treat high pH conditions and arsenic, chromium, manganese, and lead concentrations that have been mobilized by the high pH, low redox potential water. Mr. Smalstig has served as the project director, project manager and lead designer at various sites. Mr. Smalstig also has served in responsible charge of the construction-related projects at these sites and the management of the operation, monitoring, and maintenance of installed systems.

Fieldstone Property PCB Remediation, Orange County, California **–** This project included the assessment, delineation, and remediation of a PCB-impacted parcel between residences and a sensitive wetlands ecosystem. The Department of Toxic Substances Control (DTSC), U.S. Fish and Wildlife Service, and the California State Lands Commission played significant roles in the project due to the sensitive nature of the site. Mr. Smalstig was the project manager responsible for the remedial investigation work plan development, which included the sampling and analysis of more than 1,000 soil, groundwater, and surface water samples. Mr. Smalstig subsequently directed the remedial investigation, and the remediation planning and implementation. Mr. Smalstig was the technical expert in a legal case involving the DTSC cost recovery efforts on an adjacent site.

Westway Terminal, Port of Los Angeles, California **–** This project involves the assessment of a bulk storage terminal for groundwater, seawater, soil, and soil vapor impacts associated with the various products that have been stored on-site. Mr. Smalstig lead the team who performed the assessment of seawater and sediment

using a boat-mounted vibracore rig and professional divers. The study findings were used to refine the site conceptual model and develop a cost-effective closure plan.

Former Weiser Lock Facility, Orange County, California – This project involves the monitoring and remediation of groundwater and soil impacts from releases of chlorinated solvents. Mr. Smalstig was responsible for the transition of the previously existing systems from another consultant to management by Geosyntec. Mr. Smalstig was responsible for managing the routine groundwater monitoring activities, assisting with operation, monitoring, and maintenance of the above-ground groundwater treatment system, including cost-saving design adjustments proposed for the systems.

Orange County Transportation Authority (OCTA), Orange County, California - Mr. Smalstig was the project director for the four year on-call environmental services contract with OCTA. Effort conducted under this contract includes due diligence and site assessment services in support of transportation infrastructure projects. Mr. Smalstig works closely with OCTA and other project team members (design engineers, real estate professionals and construction managers) to perform assessments of properties identified for easements or "full take" in support of the project. Properties are assessed for potential environmental impacts in advance of project construction by conducting Phase I Environmental Site Assessments (ESAs) and as warranted based on Phase I ESA findings, Phase II assessments of soil, soil vapor, or groundwater conditions. Should impacts be identified, remedial options are evaluated and cost estimates are prepared.

Bolsa Chica Lowlands Assessment and Remediation, Orange County, California – This project involves the assessment and remediation of oil field-related impacts within a 1250-acre wetlands restoration project. Beginning in the mid-1990s, Mr. Smalstig was the owner's representative on the Technical Steering Committee formed to investigate the environmental condition of the property and value the property prior to sale to the State of California. Following the sale to the State, Mr. Smalstig continued in his role as Principal-in-Charge of on-going site assessment and remediation which involved the sampling and analysis of thousands of soil samples for certain key constituents, and the remediation and movement of several hundred thousand cubic yards of impacted sediments.

West Newport Oil Company, Newport Beach, California - Mr. Smalstig has managed the environmental programs at the over-400-acre oil production facility since the early 1990s. Mr. Smalstig is currently the Principal-in-Charge for the site investigation and site remedial action activities. Most recent work has included the remedial investigation and feasibility study of an area of crude oil free product on the water table, and completion

of soil remediation prior to development. Other environmental work at the facility has included:

- Phase I and II Environmental Site Assessments,
- Construction and operation of biotreatment for petroleum impacted soils,
- Dig and haul remedial actions,
- Remedial costing in support of re-development planning,
- Stormwater programs and wetland remedial action/restoration activities.

The pre-development remedial action plan designed by Geosyntec includes the phased removal of oil and gas production equipment, excavation of hydrocarbon impacted material, and biotreatment of hydrocarbon-impacted soil in a biotreatment cell. Geosyntec prepared construction plans and specifications for the construction of the biotreatment cell. In addition, Geosyntec is responsible for monitoring of construction activities associated with excavation and removal of hydrocarbon-impacted soil. Geosyntec also prepares all documentation related to site remediation for submittal to the regulatory agencies. Long-term planning of the environmental restoration of this site by Geosyntec has allowed the site owner to reduce remediation cost and realize cost-savings in the development plan. Geosyntec is currently implementing the remediation of the active oil and gas production facility under the guidance of the Santa Ana Regional Water Quality Control Board and Orange County Health Care Agency.

City of Huntington Beach Site Environmental Review, Huntington Beach, California – The City has retained Geosyntec to act as 'adjunct environmental engineers' to provide on-call expert review and comment regarding the environmental work that is being performed under City regulatory control. Mr. Smalstig and his staff routinely assist in the technical review of site assessments, data, plans, and reports that are submitted to the City and provide review comments on their behalf. In addition, on behalf of separate departments of the City, Mr. Smalstig was the project director of an extensive site inspection and surface water regulatory outreach program. Geosyntec is also assisting the City as adjunct engineer for a high-profile, 34-acre redevelopment site (Pacific City) along Pacific Coast Highway that was formerly an operating oilfield. Mr. Smalstig and his staff are assisting in the technical review of project proponent submittals, investigation data, and project development and have provided on-site monitoring, and oversight of project progress. Mr. Smalstig is the Principal-in-Charge and lead reviewer of the environmental data, which are evaluated to determine if sampling methods, locations, and analyses are appropriate given existing environmental criteria and historical land uses. After several years of inactivity following the economic downturn in 2008, Mr. Smalstig is again assisting in technical reviews of environmental documents leading to conditional closure and development of the high-profile property. Mr. Smalstig has also provided expert testimony on the City's behalf related to this project site.

City of Huntington Beach Economic Development Department – Gothard Street Landfill, Huntington Beach, California – Mr. Smalstig was the project director and senior reviewer for the redevelopment evaluation of the County-owned parcel of the former (now closed) Gothard Street Landfill property located within the City, for the purposes of evaluating environmental and engineering considerations in deliberation of the City's potential purchase and redevelopment of the site. Mr. Smalstig provided technical oversight for the review, evaluation, and discussion of site environmental conditions and pertinent environmental issues, and regulatory compliance and environmental liabilities in connection with the site, including a detailed examination of: site environmental history, waste material, groundwater/storm/surface water, landfill gas, and data gaps. The technical team identified the current closure/regulatory status, on-going monitoring and maintenance requirements, and potential future liability considerations, providing rough-order of magnitude (ROM) costs for the City's planning purposes. Mr. Smalstig was responsible for the engineering considerations and associated ROM costs associated with developing on top of a landfill for three separate redevelopment scenarios (as developed in concert with the City). Redevelopment considerations included: building foundations, ground improvement, landfill gas control, utilities, appurtenance construction, programmatic maintenance issues, and construction health and safety.

Client Confidential – Azusa, California – Mr. Smalstig has provided environmental consulting and remediation design services for the client at a former industrial site in Azusa. The site is geographically located in the Baldwin Park Operable Unit (OU) of the San Gabriel Valley Superfund Site. Groundwater contamination in the San Gabriel Valley Superfund Site is primarily due to PCE and TCE. Historic uses of chemicals (including VOCs) associated with the former facility's operations were previously identified to have impacted shallow soil vapor in localized site areas. Mr. Smalstig performed a detailed review and analysis of documents and environmental data, and searched pertinent additional records from multiple regulatory agencies in order to evaluate the site and its regional setting. Mr. Smalstig assisted with the development of the site conceptual site model and developed a multi-modal site assessment work plan to further evaluate identified site and regional impacts. In addition, Mr. Smalstig provided technical input to the legal settlement negotiations related to apportioning costs to responsible parties.

Hearthside Homes, Inc. – Orange County, California – Mr. Smalstig performed several environmental assessments for the future Harriett M. Wieder Regional Park Dedication Property. Mr. Smalstig initiated the work in 1997 with the first site Phase I ESA, and subsequently performed Phase II ESA assessment work later in 1997 and in 1998. Mr. Smalstig subsequently directed the update of certain ESA components (e.g., environmental database searches, aerial photographs) based on the 1997 Phase I ESA

work, summarized the results of Phase II ESA sampling activities, and updated descriptions of changes that had occurred at the site since the Phase I ESA was completed. The parcel was subsequently dedicated to the County.

Glenn Springs Holdings, Inc., La Verne, California – Mr. Smalstig is the Principal-in-Charge for the project site assessment, data evaluation, and potential remediation of a former Occidental Chemical research facility. Mr. Smalstig managed his team's review of the environmental data previously collected at the site, as well as regulatory standards for clean-up, given the threat of legal action related to unresolved legacy impacts. Soils at the former research facility have been contaminated by multiple former facility operations, and groundwater underlying the site is impacted by an upgradient-sourced plume. Additional work involves the evaluation of remediation alternatives and cost comparisons. On the basis of negotiations with the Los Angeles Regional Water Quality Control Board, Mr. Smalstig assisted the client productive coordination with existing and surrounding property owners and responsible parties.

Queen Mary Phase I Site Assessment, Long Beach Harbor, California – Mr. Smalstig was the project director for the complex site assessment work associated with a confidential property transaction involving the Queen Mary docked in the Long Beach Harbor. Mr. Smalstig and his team provided a detailed review of the ship, her systems, and her surrounding attractions.

Delaney Group, New York – Mr. Smalstig served as the Environmental Professional responsible for performance of an AAI-compliant Phase I ESA on behalf of counsel. Mr. Smalstig conducted a rapid-turnaround Phase I ESA on several complex large-aerial extent sites in upstate New York prior to a company acquisition. The sites includes rock quarries and offices providing services related to wind-turbine facility construction throughout the Midwest and Eastern seaboard.

Basin By-Products / Falcon Refuse – Former Liquid Waste Disposal Facility, Wilmington, California – Geosyntec is providing technical oversight of the site assessment program at this former liquid waste disposal facility under the regulatory oversight of the California Department of Toxic Substances Control (DTSC). Portions of the site were operated for waste disposal activities several decades ago, including the direct injection of spent acids and caustics and VOC-containing wastes (in accordance with permitted practices at that time). Numerous environmental assessments have been performed at the site since the 1980s, culminating with recent direction from the DTSC for a detailed further evaluation of the nature and extent of waste and related impacts (including indoor air quality) at the site. Mr. Smalstig is working with legal counsel, providing technical input for the current property owner, Republic Waste Services, based on the previous owner's legal and regulatory-driven mandates to investigate and

remediate the site. Mr. Smalstig reviews soil, soil vapor, groundwater, and indoor air sampling work plans, provides in-field oversight of the implemented field programs coordinates the review of human health risk assessments based on the collected data set.

E.T. Horn – La Mirada, California – Mr. Smalstig is managing the site investigation and assessment program at a former chemical handling facility located in La Mirada, under the regulatory oversight of the Los Angeles Regional Water Quality Control Board (Los Angeles RWQCB). Historic uses of chemicals associated with the former facility's operations were previously identified to have impacted shallow soil and groundwater in localized site areas and initiated agency-involvement at the site. Mr. Smalstig has provided specialized environmental consulting services to the client including performing a review of historic data and site assessment reports, developed, strategized, and negotiated work plans for additional site investigations with the agencies, managed the field soil vapor and soil sampling activities, managed the reporting of the results. Mr. Smalstig ultimately developed the closure approach based on the low-threat risk policies of the Los Angeles RWQCB, and lead the technical negotiations with the Los Angeles RWQCB representatives.

Client Confidential – Los Angeles County, California – Mr. Smalstig has provided expert testimony on a case involving alleged impacts to the Los Angeles River. Mr. Smalstig performed a review of data and environmental reports and prepared technical expert reports and rebuttals to opposing counsel's technical experts.

Client Confidential – Vernon, California – Mr. Smalstig directed specialized environmental consulting services at a redevelopment site in Vernon. Mr. Smalstig performed a review of multiple reports, historical information/data synthesis, including Geosyntec's Phase I ESA. Mr. Smalstig subsequently lead the technical team that developed the work plan for an additional site investigation, involving field soil sampling activities (limited Phase II ESA), and analyzed and synthesized the laboratory analytical data for presentation to the client. Geosyntec has subsequently performed a geotechnical field investigation at the site and is currently working to develop foundation recommendations that manage the large column loadings anticipated for the future structure and limit expected settlements to acceptable levels.

Client Confidential – Waterman Landfill, San Bernardino, California – At the request of counsel, Mr. Smalstig has provided specialized environmental and geotechnical consulting services at a redevelopment site located in close proximity to the closed Waterman Landfill. Mr. Smalstig was responsible for the boundary-of-waste evaluation to assist in refining the reported landfill boundaries (vertical/horizontal), thickness of landfill cap, and site conditions in the vicinity of the proposed development footprint. In addition, the evaluation was intended to investigate potential source areas for

locations where methane had been detected above regulatory thresholds and Mr. Smalstig was responsible for overseeing the soil vapor survey at the site to further evaluate subsurface soil vapor conditions. Pursuant to Title 27 of the California Code of Regulations (i.e., proposed development within 1,000 ft of a landfill) Geosyntec designed and installed a landfill gas barrier, extraction, and monitoring system for the development to mitigate against potential methane gas accumulation.

Multiple Site Assessment Portfolios, Southern California – Mr. Smalstig has performed/managed/directed/and-or served as senior reviewer on various site assessments as part of development and litigation support projects. Work experience at these sites has included: soil, soil vapor, indoor air, and groundwater characterizations, lead and asbestos surveys, UST assessments, source and plume control assessment, well head treatment assessment, plume remediation assessment, human health risk assessments, remediation and treatment capital and O&M cost analysis, GIS/database system management. Clients have included:

- *Home Depot, U.S.A., California*
- *MASCO Corporation, California Sites*
- *Target Corporation, Ontario, California*
- *L.A. Unified School District, Los Angeles Sites*
- *Gasoline Service Stations, multiple locations*
- *Client Confidential, Pacific Palisades*

GENERAL EXPERIENCE

In addition to the above-mentioned project-specific experience, Mr. Smalstig has performed Phase I and II ESAs at multiple additional project sites around the United States and in Mexico. He has performed field and laboratory testing and analysis of the effectiveness of groundwater and vadose zone remediation efforts, site investigation studies, as well as best management practices for surface water, at numerous sites. Mr. Smalstig has also installed pilot- and full-scale remediation systems following the field/laboratory programs. Mr. Smalstig's experience in these areas includes:

* installation of single, nested, and continuous multi-chamber tubing vadose zone wells and groundwater monitoring, extraction, and injection wells using a variety of drilling techniques;

* logging and collection of soil, soil gas, ambient air, surface water, groundwater, floating product, sludge and leachate samples;

* on-site physical and chemical testing of soil, groundwater, surface water, and waste samples and laboratory physical and chemical testing of soil and groundwater samples;
* the evaluation of aquifer properties using aquifer pump testing, injection well testing, and slug testing field procedures;
* preparation of geotechnical and environmental work plans, safety plans, reports, and permitting documents for submittal to clients and regulatory agencies; and
* design and implementation of drilling activities (hollow and solid stem auger, mud rotary, rotosonic, air rotary casing hammer, and reverse water circulation).

AFFILIATIONS

American Society of Civil Engineers (ASCE)
National Ground Water Association (NGWA)

Clare M. Look-Jaeger, P.E.

Principal

Years of Experience:
27 years

Years with LLG Engineers:
26 years

Education:
B.S. Civil Engineering
Marquette University, Milwaukee, WI

Registrations:
Professional Engineer
CA Registration TR 1878

LINSCOTT LAW & GREENSPAN

engineers

Linscott, Law & Greenspan, Engineers
600 South Lake Avenue
Suite 500
Pasadena, CA 91106
T 626.796.2322
F 626.792.0941
www.llgengineers.com

Pasadena
Irvine
San Diego
Woodland Hills

Biography

Ms. Look-Jaeger has over 27 years of experience in the preparation of transportation planning analyses, with particular emphasis on the preparation of environmental review analyses for various developments pursuant to the requirements of CEQA. Ms. Look-Jaeger specializes in entitlement processing efforts, particularly on highly controversial projects which involve litigation. Ms. Look-Jaeger is a Principal of Team Pasadena and a licensed Traffic Engineer in the State of California. Ms. Look-Jaeger holds a Bachelor of Science in Civil Engineering (BSCE) degree from Marquette University with an emphasis in Transportation studies.

Areas of Expertise

- Traffic Impact Studies/Analyses for Environmental Review
- Transportation Master Planning/Site Feasibility Planning
- Access and Circulation Planning for Various Modes
- Parking Studies/Shared Parking Demand Analyses
- Conceptual Mitigation Planning/ Improvement Packages
- Regional Facility Operations and Analysis

Relevant Project Experience

New Century Plan Project, Century City area of Los Angeles, California, Ongoing

Ms. Look-Jaeger, P.E. served/s as Principal-in-Charge for the preparation of the traffic and parking analyses included as part of the Draft and Final EIRs for the project proposed by Westfield, LLC which includes the development of approximately 358,000 net new square feet of retail-commercial space at the existing Westfield Shopping Center and up to 262 units of residential. The firm was integral in providing support throughout the challenging environmental review process, including pre-litigation support and prepared hundreds of responses to comments in support of the Final EIR. The traffic analysis reviewed existing and future operations for over 60 locations and a comprehensive mitigation program was developed. Community meeting and public hearing representation is also being provided. LLG is also working closely with the Council office and various homeowner association representatives, as well as providing on-going transportation planning, parking, and traffic engineering design support.

University Gateway Project - USC Campus, Los Angeles, California, 2004 through Present

Ms. Look-Jaeger, P.E. served as Principal-in-Charge for the preparation of the traffic and parking analyses included as part of the Draft and Final EIRs for the project which included the development of 421 residential apartments for USC student housing, ground floor retail space as well as community serving retail space. The consultation was provided under the direction of the Community Redevelopment Agency (CRA). The firm was integral to providing support throughout the challenging environmental review process, including litigation support and prepared numerous responses to comments in support of the Final EIR and throughout the litigation process. Community meeting and public hearing representation was also provided. LLG is providing ongoing traffic engineering design support consultation services related to both the site adjacent and off-site locations, involving signing and striping, construction detour plans, and other miscellaneous coordination and consultation services in conjunction with the respective City departments such as LADOT, BOE, DBS and the CRA.

GREG TONKOVICH
Senior Analyst

HIGHLIGHTS

Education

- M.S., Electrical Engineering, University of Southern California
- B.S., Planning and Development, University of Southern California

Key Strengths

- Air quality
- Global Climate Change
- Heath Risk Assessments
- Noise

Training

- Stays up to date with modeling techniques and regulations through continuing education courses

Registrations/Certifications

- American Institute of Certified Planners (AICP)
- American Planning Association (APA)
- Institute of Noise Control Engineering (INCE)
- State of California General 'B' Contractors License

PROFESSIONAL EXPERIENCE

Mr. Tonkovich has over 12 years of environmental consulting experience and over 10 years of air quality and noise analysis experience. He specializes in air quality and noise impact analyses for governmental agencies and the business community and has completed numerous complex air and noise studies that conform to both the California Environmental Quality Act (CEQA) and the National Environmental Policy Act (NEPA) requirements.

Mr. Tonkovich's air quality analysis experience includes global climate change analyses and health risk assessments. He is proficient in utilizing CalEEMod, URBEMIS2007, CALINE4, ISCST3, AERMOD, EMFAC2014, and OFFROAD2011 models, in order to quantify emissions impacts as well as to assess the efficacy of proposed mitigation.

Mr. Tonkovich is also experienced in noise analyses and is proficient in utilizing FHWA Traffic Noise Model (TNM), FHWA Roadway Construction Noise Model (RCNM), FAA Integrated Noise Model (INM), and SoundPlan. In addition he has created and implemented a noise program based on the FHWA Standard. Through the use of the above models he is able to efficiently determine noise impacts to nearby sensitive land uses and assess the efficacy of proposed mitigation.

He has successfully ran an environmental consulting business for over nine years and has been responsible in managing costs, scheduling, and accounting. Mr. Tonkovich has a proven record of preparing air quality and noise impact analyses to successful completion. During his 12 year career he has prepared more than 300 environmental documents with a 100 percent success rate.

Mr. Tonkovich is experienced in a wide range of project types, including: residential, commercial, industrial, and recreational projects as well as public projects that include specific plans and general plans. He has experience in preparing studies to specific standards and formats such as Caltrans Air Quality and Noise Study Reports and has completed air quality and/or noise analyses in over 150 different local jurisdictions throughout California.

PROJECT EXPERIENCE

Devil's Gate Reservoir Sediment Removal and Management Project, Pasadena, CA. Principal. Mr. Tonkovich prepared a health risk assessment (HRA) and noise impact analysis for the removal of approximately 2.9 million cubic yards of sediment plus a maintenance plan that would include the annual removal of 13,000 cubic yards of sediment. The HRA utilized emission rates calculated from the EMFAC2011 model and AERMOD View to calculate the diesel particulate matter (DPM) concentrations from four construction alternatives and operations at the nearby sensitive receptors. No significant construction or operational health risks were found. The noise analysis utilized the FHWA's RCNM model to analyze the noise impacts from onsite construction activities and utilized the FHWA RD-77-108 model to analyze the noise impacts associated with the haul trucks on the roads to the sediment depository locations. The analysis found that a significant noise impact may occur due to the differing jurisdictions allowable construction times and the

analysis provided mitigation limiting the time construction activities may occur. The analysis also found that a significant vibration impact may occur and provided mitigation that limited the type of equipment that can operate within 180 feet of an offsite structure. With incorporation of the proposed mitigation all noise and vibration impacts were reduced to less than significant levels.

Peck Water Conservation Improvement Project, Arcadia, CA. Principal. Mr. Tonkovich prepared an air quality, HRA, and global climate change analysis and a noise impact analysis for the removal of 94,000 cubic yards of sediment, a maintenance plan for the annual removal of 2,000 cubic yards of sediment, and the construction of a pump station and a 7,000-foot long pipeline. The air quality analysis utilized the CalEEMod model to calculate the criteria pollutant and GHG emissions from construction of the proposed project, utilized the SCAQMD Look-Up Tables to calculate the local concentrations at the nearby homes, and the AERMOD model to calculated the DPM concentrations and associated cancer risks at the nearby homes. No significant construction or operational air quality, GHG, or health risks were found. The noise analysis utilized the FHWA's RCNM model to analyze the noise impacts from onsite construction activities and utilized the FHWA RD-77-108 model to analyze the noise impacts associated with the haul trucks on the roads to the sediment depository locations. No significant construction or operational noise or vibration impacts were found.

Soledad Canyon Road Bridge 53C-0488 Replacement Project, Los Angeles County. Prepared the Air Quality, Greenhouse Gas Emissions and Noise Sections of an Initial Study/Mitigated Negative Declaration for Chambers Group that analyzed the removal of a 27-foot wide by 317-foot long timber deck bridge and replacement with a 43-foot wide by 330-foot long cast-in-place concrete bridge for the Los Angeles County Department of Public Works. The air quality and greenhouse gas emissions analyses utilized the CalEEMod model to analyze the regional air emissions from construction activities and the SCAQMD's Look-Up Tables were utilized to analyze the criteria pollutants local air concentrations at the nearby sensitive receptors. The air quality analysis found a significant –related local PM10 impact would occur at the nearby residences and mitigation was provided that required increased watering of exposed surfaces during earthmoving activities. The noise analysis utilized the FHWA RCNM model to calculate the noise levels from the construction equipment associated with the demolition of the existing bridge and construction of the proposed bridge. The noise analysis found that the proposed construction activities would exceed the County's maximum construction noise thresholds at the nearby sensitive receptors and the noise barrier equations provided by Caltrans in the Technical Noise Supplement (TeNS) were utilized to calculate the temporary sound wall heights and placement in order to reduce the noise levels to less than significant levels.

Pacoima Spreading Grounds Improvement Project, Los Angeles County. Prepared an Air Quality, Greenhouse Gas Emissions and Health Risk Assessment and Noise Impact Analysis for BonTerra Psomas that analyzed the removal of up to 1.6 million cubic yards of sediment and reconfiguration of the spreading grounds. The air quality analysis utilized the CalEEMod model to calculate the criteria pollutant and GHG emissions from construction of the proposed project, utilized the SCAQMD Look-Up Tables and AERMOD to calculate the local concentrations at the nearby homes, and the AERMOD model to calculated the DPM concentrations and associated cancer risks at the nearby homes. No significant construction or operational air quality, GHG, or health risks were found. The noise analysis utilized the FHWA's RCNM model to analyze the noise impacts from onsite construction activities and utilized the FHWA RD-77-108 model to analyze the noise impacts associated with the haul trucks on the roads to the sediment depository locations. No significant construction or operational noise or vibration impacts were found.

SECTION 5.0 REFERENCES

Bodenchak, J. 2015a (July 20). Personal communication. Email correspondence from J. Bodenchak (Project Manager, Los Angeles County Flood Control District) to J. Neary (Assistant Project Manager, BonTerra Psomas) regarding jurisdictional resources at the Pacoima Spreading Grounds.

———. 2015b (July 23). Personal communication. Email correspondence from J. Bodenchak (Project Manager, Los Angeles County Flood Control District) to E. Yoshida (Water Resources-Watershed Management, Los Angeles Department of Water and Power) regarding groundwater recharge at the Pacoima Spreading Grounds.

BonTerra Psomas. 2015 (July). *Phase I Paleontological Resources Assessment, Pacoima Spreading Grounds Improvement Project, Los Angeles, Los Angeles County, California*. Santa Ana, CA: BonTerra Psomas (Appendix C-2).

California Department of Conservation (DOC). 1979. Surface Mining and Reclamation Act Mineral Land Classification Maps: Generalized Aggregate Resources Classification Map, San Fernando Valley and Adjacent Production – Consumption Regions. ftp://ftp.consrv.ca.gov/pub/dmg/pubs/sr/SR_143/PartII/Plate_2-1.pdf.

California Department of Conservation, Farmland Mapping and Monitoring Program (FMMP). 2015 (January, published date). Los Angeles County Important Farmland 2012. Sacramento, CA: FMMP. ftp://ftp.consrv.ca.gov/pub/dlrp/FMMP/pdf/2012/los12.pdf.

California Department of Forestry and Fire Protection (CAL FIRE). 2007 (November 7, adopted). Fire Hazards Severity Zones in SRA. Sacramento, CA: CAL FIRE. http://frap.fire.ca.gov/webdata/maps/los_angeles/fhszs_map.19.pdf.

California Department of Transportation (Caltrans). 2013 (December 19, last updated). Eligible (E) and Officially Designated (OD) Routes. Sacramento, CA: Caltrans. http://www.dot.ca.gov/hq/LandArch/16_livability/scenic_highways/cahisys.htm.

California Geological Survey (CGS). 1999 (March 25, released). Seismic Hazard Zones Official Map, San Fernando Quadrangle. Sacramento, CA: CGS. http://gmw.consrv.ca.gov/shmp/download/quad/SAN_FERNANDO/maps/ozn_sfer.pdf.

———. 1979 (Effective January 1). Special Studies Zones Revised Official Map, San Fernando Quadrangle. Sacramento, CA: CGS. http://gmw.consrv.ca.gov/shmp/download/quad/SAN_FERNANDO/maps /SANFERN.PDF.

Chambers Group, Inc. (Chambers). 2013a (November). *Biological Technical Report for the Pacoima Spreading Grounds Improvement Project, Los Angeles County, California*. Santa Ana, CA: Chambers (Appendix B).

———. 2013b (November). *Cultural Resources Investigation for Pacoima Spreading Grounds Improvement Project, Los Angeles County, California*. Santa Ana, CA: Chambers (Appendix C-1).

Federal Emergency Management Agency (FEMA). 2008 (Effective September 26). Flood Insurance Rate Map, Los Angeles County, California and Incorporated Areas, Map Number 06037C1075F. Washington, DC: FEMA. http://fema.maps.arcgis.com/home/webmap/viewer.html?webmap=cbe088e7c8704464a

a0fc34eb99e7f30&extent=-118.46556253979531,34.25765922005599,-118.43569346020469,34.27539242777542.

Geosyntec Consultants (Geosyntec). 2015a (June). *Phase I Environmental Site Assessment, Pacoima Spreading Grounds, Los Angeles, California*. Huntington Beach, CA: Geosyntec (Appendix D-1).

———. 2015b (October). *Phase II Environmental Site Assessment, Pacoima Spreading Grounds Headwords, Los Angeles, California*. Huntington Beach, CA: Geosyntec (Appendix D-2).

Linscott, Law & Greenspan Engineers (LLG). 2015 (August). *Traffic Impact Study, Pacoima Spreading Grounds Improvement Project, County of Los Angeles, California*. Pasadena, CA: LLG (Appendix F).

Los Angeles, City of. 2015a (June 30, current through). *Official City of Los Angeles Municipal Code™.* Cincinnati, OH: American Legal Publishing Corporation for the City. http://www.amlegal.com/nxt/gateway.dll/California/lamc/municipalcode?f=templates$fn=default.htm$3.0$vid=amlegal:losangeles_ca_mc.

———. 2015b (Accessed July 10). Zone Information Map Access System. Los Angeles, CA: the City. http://zimas.lacity.org/.

———. 2011 (August 31). *Zoning Administration Hearing Resolution; Case No. ZA-2009-4028(CU)(ZV)(ZAA)(F)*. Los Angeles: CA, the City. http://planning.lacity.org/PdisCaseInfo/Home/GetDocument/YzM4OTJiZTQtNjBjMy00ZTI5LWJkZmQtMzYxMmZjMGEyOTAw0.

———. 2010 (As of July 2010). *Mission Hills-Panorama City-North Hills Community Plan, General Plan Land Use Map*. Los Angeles: CA, the City. http://planning.lacity.org/complan/valley/PDF/mssplanmap.pdf.

———. 2009 (As of September 22). *Arleta-Pacoima Community Plan, General Plan Land Use Map*. Los Angeles: CA, the City. http://planning.lacity.org/complan/valley/PDF/arlplanmap.pdf.

———. 2001 (Adopted September 26). *City of Los Angeles General Plan, Conservation Element*. Los Angeles: CA, the City. http://planning.lacity.org/cwd/gnlpln/ConsvElt.pdf.

———. 1999a (Adopted September 8). *City of Los Angeles General Plan, Transportation Element*. Los Angeles: CA, the City. http://planning.lacity.org/cwd/gnlpln/TransElt/index.htm.

———. 1999b (Adopted June 9). *Mission Hills-Panorama City-North Hills Community Plan*. Los Angeles: CA, the City. http://planning.lacity.org/complan/pdf/msscptxt.pdf.

———. 1996 (Adopted November 26). *City of Los Angeles General Plan, Safety Element*. Los Angeles: CA, the City. http://planning.lacity.org/cwd/gnlpln/saftyelt.pdf.

Los Angeles, County of. 2015a. *Los Angeles County, California – Code of Ordinances.* Tallahassee, FL: MuniCode Corporation for the County. https://library.municode.com/index.aspx?clientId=16274

———.2015b (Last accessed July 27). Los Angeles County Airports: Whiteman Airport. Los Angeles, CA: the County, Aviation Division. http://dpw.lacounty.gov/avi/airports/Whiteman.aspx.

Los Angeles, County of, Airport Land Use Commission (ALUC). 2003 (May 13). Whiteman Airport Airport Influence Area. Los Angeles, CA: ALUC. http://planning.lacounty.gov/assets/upl/project/aluc_airport-whiteman.pdf.

Los Angeles, County of, Department of Public Works (LACDPW). 2015 (May). *County of Los Angeles Countywide Integrated Waste Management Plan, 2013 Annual Report*. Los Angeles, CA: LACDPW. http://dpw.lacounty.gov/epd/swims/ShowDoc.aspx?id=3473&hp=yes&type=PDF.

———. 2009. *Geologic Investigation, Pacoima Spreading Grounds, Artela and Mission Hills, City of Los Angeles, California*. Los Angeles, CA: LACDPW.

Los Angeles, County of, Department of Regional Planning (LACDRP). 2015 (February). Significant Ecological Areas and Coastal Resource Areas Policy Map (Figure 9.3 of the County of Los Angeles General Plan). Los Angeles, CA: LACDPW. http://planning.lacounty.gov/assets/upl/project/gp_2035_2014-FIG_9-3_significant_ecological_areas.pdf.

Los Angeles, County of, Flood Control District (LACFCD). 2011 (April 6). *Interdepartmental Memorandum from Christopher Stone to Diego Cadena, LACFCD Water Resources Division; Subject: Pacoima Spreading Grounds Project Concept Report.*

South Coast Air Quality Management District (SCAQMD). 1976a (May 7, adopted). Rule 402: Nuisance. Diamond Bar, CA: SCAQMD. http://www.aqmd.gov/docs/default-source/rule-book/rule-iv/rule-402.pdf?sfvrsn=4.

———. 1976b (May, as amended through 2005). Rule 403: Fugitive Dust. Diamond Bar, CA: SCAQMD. http://www.aqmd.gov/docs/default-source/rule-book/rule-iv/rule-403.pdf?sfvrsn=4.

United States Environmental Protection Agency (USEPA) and U.S. Army Corps of Engineers (USACE). 2015 (June 29). *Clean Water Rule: Definition of "Waters of the United States" (40 CFR 230.3)*. Washington, DC: USEPA. http://www2.epa.gov/sites/production/files/2015-06/documents/clean_water_rule_ 40_cfr_230_3.pdf.

United States Geological Survey (USGS). 2015 (Last modified July 9). Mineral Resources Data System: Map. Washington, DC: USGS. http://mrdata.usgs.gov/mineral-resources/mrds-us.html.

Vista Environmental (Vista). 2015a (August). *Air Quality, Greenhouse Gas Emissions, and Health Risk Assessment Impact Analysis, Pacoima Spreading Grounds Improvement Project, City of Los Angeles*. Laguna Beach, CA: Vista (Appendix A).

———. 2015b (August). *Noise Impact Analysis, Pacoima Spreading Grounds Improvement Project, City of Los Angeles*. Laguna Beach, CA: Vista (Appendix E).

Yoshida. E. 2015 (August 4). Personal communication. *E-mail correspondence from E. Yoshida (Water Resources-Watershed Management, Los Angeles Department of Water and Power) to J. Bodenchak (Project Manager, Los Angeles County Flood Control District) and J. Neary (Assistant Project Manager, BonTerra Psomas) regarding groundwater recharge at the Pacoima Spreading Grounds*.