Los Angeles County Department of Public Works

HYDROLOGIC REPORT

2000 – 2001

Water Resources Division

Table of Contents

Table of Contents ..... (i)

A p p e n d i c e s ..... (ii)

ACKNOWLEDGMENTS 1

INTRODUCTION 2

LOS ANGELES COUNTY 3

FLOOD CONTROL AND WATER CONSERVATION 5

PRECIPITATION 6

RAINFALL INDICES 7
ACTIVE RAINFALL STATIONS DURING WATER YEAR 1999-2000 8
DAILY PRECIPITATION SUMMARY 13
LOCATION MAP 14

EVAPORATION 15

ACTIVE STATIONS 16
MONTHLY SUMMARY 17
LOCATION MAP 18

RUNOFF 19

INDEX OF STREAM FLOW MEASURING STATIONS 20
STREAM GAGING STATION INFORMATION 22
DAILY DISCHARGE 22
STREAM GAGING STATION PEAK FLOW 22
LOCATION MAP 23

RESERVOIRS 24

YEARLY RESERVOIR OPERATION SUMMARY 25
FACILITIES 26
LOCATION MAP 27

EROSION CONTROL 28

LOCATION MAP 29
DEBRIS BASIN - DESIGN DATA: 30

WATER CONSERVATION 35

CONSERVING THE WATERS 35
IMPORTED WATER 35
RECYCLED WATER 36
SEAWATER BARRIER PROJECTS 36
SEASONAL DATA AND MAPS 37
GROUNDWATER BASINS AND GROUNDWATER RECHARGE 37
S U M M A R Y 41

SPREADING FACILITIES OWNED AND OPERATED BY THE DEPARTMENT *41*
SPREADING FACILITIES NOT OWNED BY THE DEPARTMENT *41*
TOTAL MONTHLY WATER CONSERVED *41*
IMPORTED WATER OUTLET RELEASES *41*
RECLAIMED WATER *41*
GROUND WATER FLUCTUATION *41*
KEYWELL MAP *42*

Appendices

DAILY PRECIPITATION SUMMARY ..... **A**

STREAM GAGING STATION INFORMATION ..... **B**

DAILY DISCHARGE ..... **C**

STREAM GAGING STATION PEAK FLOW ..... **D**

YEARLY RESERVOIR OPERATION SUMMARY ..... **E**

EROSION CONTROL - LOCATION MAP ..... **F**

SUMMARY OF WATER CONSERVATION

SPREADING FACILITIES OWNED AND OPERATED BY DEPARTMENT ..... G
SPREADING FACILITIES NOT OWNED BY THE DEPARTMENT ..... H
TOTAL MONTHLY WATER CONSERVED I
IMPORTED WATER OUTLET RELEASES ..... J
RECLAIMED WATER ..... K
GROUND WATER FLUCTUATION L

Acknowledgments

This report was prepared by the Water Resources Division under the direction of Reza Izadi, Assistant Deputy Director. The following people contributed the data gathered for this report.

Data Collection and Processing:

OPERATIONS STAFF:
Oliver Galang
Ken Zimmer
Edward Gerlits
Irene Wong, Leopoldo Herrera

Hans Riedel: Supervising
Armando Rodriguez, Marshall Bonaparte, Richard Clinton, Don Wilson
Soo Koo: Supervising
Kevin Smith, Alex Rivera

HYDROLOGIC SYSTEM SUPPORT STAFF:
Sameer Etman: Rodney Brown, Marine Gaplandzhyan, Leonard Davidian
Arthur Gotingco: Eka Abdi

INSTRUMENTATION SUPPORT STAFF:
Araik Zargaryan: Supervising
Willis Feagin
Leonard Khoo
Thompson Nguyen
Glen "Butch" Gayer

Coordination:
Adam Walden
Fred Lai

Graphic Design, Layout, Art Production:
Fred Lai - Webmaster
Rodney Brown - Map Specialist

DISCLAIMER

The information contained on this report was valid at the time of publication. The Department of Public Works reserves the right to make changes at any time and without notice, and assumes no liability for any damages incurred directly or indirectly as a result of changes errors, omissions or discrepancies.

Introduction

This report discusses hydrologic data relative to Los Angeles County for the period beginning October 1, 2000 and ending September 30, 2001. The Department has revised the format of this report to provide users with more useful data and a more efficient means of utilizing that data. The report consists of six sections.

PRECIPITATION
Lists 273 active rainfall stations for which unpublished rainfall data are on file at the Department.

RESERVOIRS
Lists 15 dams and reservoirs for which inflow, outflow and storage data are on file at the Department

EVAPORATION
Lists 13 evaporation station locations and data for this reporting period. Unpublished evaporation data from previous years are in file at the Department.

EROSION CONTROL
115 debris basins. Data on the debris production amounts for the reporting period are contained in this section. Unpublished debris production and inflow data are on file at the Department.

RUNOFF
Lists 65 active streamflow stations. The mean of the daily flow rates during the reporting period, the reporting period's peak flowrate and historical peak flow rate for each of these stations are contained in this section. Unpublished stream flow data are on file at the Department.

WATER CONSERVATION
Lists 32 groundwater recharge locations. Data on the water conserved at various facilities and water injected at seawater barrier projects during the reporting period, and historical well level data for key wells are contained in this section. Unpublished water conservation data from previous years are on file at the Department.

Unpublished information may be obtained by contacting:

LOS ANGELES COUNTY DEPARTMENT OF PUBLIC WORKS
WATER RESOURCES DIVISION
P.O. BOX 1460
ALHAMBRA, CA 91802-1460

...or telephone: (626) 458-6120

Los Angeles County

TOPOGRAPHY:

The County of Los Angeles covers an area of 4,083 square miles and measures approximately 66 miles in the east - west and 73 miles in the north - south directions.

The terrain within the County can be classified in broad terms as being 25 percent mountainous; 14 percent coastal plain; and 61 percent hills, valleys, or deserts. Relief of the terrain ranges from sea level to a maximum elevation of 10,000 feet. The coastal plain is generally of mild slope and contains relatively few depressions or natural ponding areas. The slopes of main river systems crossing the coastal plain, such as the San Gabriel River, Los Angeles River, and Ballona Creek, range from 4 to 14 feet per mile.

Topography in the mountainous area is generally rugged with deep, V-shaped canyons separated by sharp dividing ridges. Steep walled canyons with side slopes of 70 percent or more are common. The gradient of principal canyons in the San Gabriel Mountains ranges from 150 to 850 feet per mile. Mountain ranges are aligned in a general east-west direction with the dominant range being the San Gabriel Mountains. The majority of mountain ridges lie below Elevation 5,000 feet. The total area above this level is approximately 210 square miles.

GEOLOGY - SOILS:

Igneous, metamorphic, and sedimentary rock groups are all present within the County. The San Gabriel Mountains and Verdugo Hills are composed primarily of highly fractured igneous rock, with large areas of granitic rock formation being exposed. Faulting and deep weathering have produced porous zones in the rock formation; however, rock masses have produced a comparatively shallow soil mantle due to the steepness of slopes which accelerates erosion of the fine material.

Other mountains and hilly reaches are composed primarily of folded and faulted sedimentary rocks, including shale, sandstone, and conglomerate. Residual soils in these areas are shallow and generally less pervious than those of the San Gabriel Mountain range.

Valley and desert soils are alluvial and vary from coarse sand and gravel near canyon mouths to silty clay, clay and sand and gravel in lower valleys and the coastal plain. The alluvial fill has accumulated by repeated deposition of sediments to depths as great as several thousand feet. This fill is quite porous in areas of relatively low clay content. Geologic structures and irregularities in the underlying bedrock divide the alluvium into several groundwater basins. Valley soils are generally well drained but there are a few areas containing perched water.

LAND USE:

The principal vegetative cover of upper mountain areas consists of various species of brush and shrubs known as chaparral. Most trees found on mountain slopes are oak, with alder, willow, and sycamore found along streambeds at lower elevations. Pine, cedar, and juniper are found in ravines at higher elevations and along high mountain summits.

The chaparral is extremely flammable, and extensive burns of the mountain vegetation frequently occur during dry, low-humidity weather accompanied by high winds. Chaparral has the ability to sprout following fire and grows rapidly to re-establish the watershed cover within a period of 5 to 10 years.

Grasses are the principal natural vegetation on the hills. Much of the hill land and nearly all of the valley land in the densely populated portion of the County south of the San Gabriel Mountains has been converted to urban and suburban use. Development of the Santa Clarita Valley and desert areas to the north of the San Gabriel Mountains is sparse at present but is proceeding rapidly.

CLIMATE:

The climate within the County varies between subtropical on the Pacific Ocean side of the San Gabriel Mountain range to arid in the Mojave Desert. Nearly all precipitation occurs during the months of December through March. Precipitation during summer months is infrequent, and rainless periods of several months are common. Snowfall at elevations above 5,000 feet is frequently experienced during the winter storms, but the snow melts rapidly except on higher peaks and the northern slopes. Snow is rarely experienced on the coastal plain.

January and July are the coldest and warmest months of the year, respectively. At the Los Angeles civic center, the 30-year average daily minimum temperature for January is 48 degrees (Fahrenheit) above zero. The average daily

maximum temperature for July is 84 degrees. At Mount Wilson (Elevation 5,850 feet), the 30-year average daily minimum temperature for January is 35 degrees above zero and the average daily maximum temperature for July is 80 degrees.

HYDROMETEOROLOGIC CHARACTERISTICS:

Coastal and Mountain Areas
Precipitation (rainfall) in the Los Angeles area occurs primarily in the form of winter orographic rainfall associated with extra tropical cyclones of North Pacific origin. Major storms consist of one or more frontal systems and occasionally last four days or longer. Air masses and frontal systems associated with major storms commonly extend for 500 to 1,000 miles in length and produce rainfall simultaneously throughout the County. Major storms approach Southern California from the west or northwest with southerly winds which continue until frontal passage. The mountain ranges lie directly across the path of the inflow of warm, moist air, and orographic effects greatly intensify precipitation.

The seasonal normal rainfall in Los Angeles County ranges from 27.50 inches in the San Gabriel Mountains to 7.83 inches in the desert. The annual County average for the annual rainfall for Los Angeles County is 15.65 inches.

The effects of snowmelt upon flood runoff is of significance in the few cases when warm spring rains from southerly storms fall on a snowpack. During major storms, temperatures throughout the County may remain above freezing. Average individual storm rainfall amounts and intensities conform to a fairly definite aerial pattern which reflects general effects of topographic differences.

Desert Areas
Summer convective rainfall is principally experienced in the upper San Gabriel Mountains and the Mojave Desert regions. In many desert areas, the most serious flooding occurs as a result of summer convective storms.

RUNOFF CHARACTERISTICS:

Mountain Areas
In mountain areas, the steep canyon slopes and channel gradients promote a rapid concentration of storm runoff . Depression storage and detention storage effects are minor in the rugged terrain. Soil moisture during a storm has a pronounced effect on runoff from the porous soils supporting a good growth of deep-rooted vegetation such as chaparral. Soil moisture deficiency is greatest at the beginning of a rainy season, having been depleted by the evapotranspiration process during the dry summer months. Precipitation during periods of soil moisture deficiency is nearly entirely absorbed by soils, and except for periods of extremely intense rainfall, significant runoff does not occur until soils are wetted to capacity. Due to high infiltration rates and porosity of mountain soils, runoff occurs primarily as subsurface flow or interflow in addition to direct runoff. Spring or base flow is essentially limited to portions of the San Gabriel Mountain range. Consequently, most streams in the County are intermittent.

Runoff from a mountain watershed recently denuded by fire exceeds that for the unburned state due to greatly increased quantities of inorganic debris present in the flow and increased direct runoff resulting from lowered infiltration rates. Debris production from a major storm has amounted to as much as 223,000 cubic yards per square mile of watershed. Boulders up to eight feet in diameter have been deposited in valley areas a considerable distance from their source.

Debris quantities equal in volume to storm runoff, representing a 100 percent bulking of runoff from a major storm, have been recorded. Where debris-laden flow traverses an alluvial fill unconfined by flood control works, flood discharges follow an unpredictable path across the debris cone formed at the canyon mouth.

Hill and Valley Areas
In hill areas, runoff concentrates rapidly from the generally steep slopes; however, runoff rates from undeveloped hill areas are normally smaller than those from mountain areas of the same size. In those hill areas which have been developed for residential use, concentration times become considerably decreased due to drainage improvement, and runoff volumes and rates have increased due to increased imperviousness. On the other hand, erosion is controlled and debris is minimized from storm flows. Debris production rates from undeveloped hill areas are normally smaller than those from mountain areas of the same size.

In highly developed valley areas, local runoff volumes have increased as the soil surface has become covered by impervious materials. Peak runoff rates for valley areas have also increased due to elimination of natural ponding areas and improved hydraulic efficiency of water carriers such as streets and storm drain systems.

Flood Control & Water Conservation

FLOODS . . . AN OLD STORY:

Floods in Los Angeles County have been recorded as far back as the days of the Mission Padres. For centuries waters have swept out of the San Gabriel Mountains causing extensive property damage and taking a great toll of lives.

Such a flood occurred in 1914 causing over $10 million in property damage and taking many lives. As a result, the State legislature in 1915 enacted the statute creating the Los Angeles County Flood Control District. The responsibilities and authority vested in the Flood Control District were, in 1985, transferred to and are now part of the Los Angeles County Department of Public Works.

The Department, under the Flood Control Act, has two tasks. . .control the floods and conserve the water.

CONTROLLING THE WATERS:

Successful early bond issues financed construction of the 15 dams which the Department built in the San Gabriel Mountains and foothills to impound storm waters until they could be safely released. Debris basins were constructed to trap eroded materials which had caused terrible damage in the past. Flood channel improvements were undertaken to confine the waters and convey them safely through the urbanized areas to the ocean.

District engineers prepared a Comprehensive Plan in the early 1930's which would control flooding and save as much of the water as practicable when fully implemented.

Federal legislation in 1936 brought the United States Army Corps of Engineers into the local flood control picture. Since that time, the two agencies have been jointly pursuing implementation of the Comprehensive Plan. The Department also cooperates with the United States Natural Resources Conservation Service and Forest Service in erosion control.

CONSERVING THE WATERS:

In addition to its flood control program, the Department has the equally important mission of conserving as much of the storm and other waste waters as practicable. The use of water conservation facilities in or adjacent to river channels and their tributaries permits water to be percolated into groundwater aquifers or basins for later pumping and supply to consumers. These water conservation facilities are located in areas where the underlying soils are composed of porous sands and gravel formations. Some are shallow and resemble rice paddies, while others are deep basins which were once gravel pits.

The importance of this activity is apparent when it is realized that about 30 to 40 percent of the water used in the County is pumped from groundwater supplies. The growth of the County, combined with periodic droughts, seriously depleted these supplies on numerous occasions throughout the history of the County.

Other major conservation efforts by the Department include combating the serious salt water intrusion into groundwater supplies inland from the Pacific Ocean and utilizing imported and reclaimed water to help replenish groundwater supplies.

ORGANIZED TO DO THE JOB:

Day-to-day administration of Department affairs is vested in the Director of Public Works who is appointed by and responsible to the Los Angeles County Board of Supervisors. A part of the Department's activities involve the planning, design and construction of flood control and water conservation facilities, and the operation and maintenance of dams, debris basins, spreading grounds, channels, and storm drains.

P R E C I P I T A T I O N

PRECIPITATION

The Department operates and maintains a network of rain gage stations to collect rainfall (precipitation) data for the purposes of in-house engineering and design of flood control and water conservation facilities.

RAINFALL AMOUNTS:

Although the Department operates and maintains 273 raingage stations including those which record amounts for duration ranging from 5 minutes to 24 hours, only daily and annual amounts for the report period are listed herein. Additional data (e.g., intensities) can be obtained by contacting the custodian of hydrologic records.

ALERT SYSTEM
Automated Local Evaluation in Real Time:

The Department of Public Works operates and maintains a state-of-the-art ALERT computer system to monitor meteorological conditions in the County and Southern California in real time, i.e., as they occur. The system includes a network of field sensors that monitor and receive precipitation amounts including rainfall data from the Corps of Engineers' Los Angeles Telemetry System. During the 1996-97 Water Year the Department converted all of its automatic recording raingage stations from weighing bucket mechanisms to ALERT stations with tipping bucket mechanisms.

COOPERATION:

The cooperation of observers in furnishing rainfall data to the Department as a public service is appreciated. The effort of the many agencies and individuals who have so freely cooperated with us in the collection of this data have resulted in the large number of complete records for the period covered by this report.

Data from 22 stations of the Department's records are reported and published by the National Oceanic and Atmospheric Administration (NOAA).

CUSTODIAN:

Unpublished information may be obtained by contacting:

Los Angeles County Department of Public Works
Water Resources Division
P.O. Box 1460
Alhambra, CA 91802-1460
...or telephone: (626) 458-6120

P R E C I P I T A T I O N

RAINFALL INDICES

USING SELECTED STATIONS
FOR THE PERIOD OCTOBER 1, 2000 THROUGH SEPTEMBER 30, 2001

Area	Percent of Area	Seasonal Normal (inches)	Total Precipitation to Date	Percent of Seasonal Normal
A. COASTAL PLAIN	14.1%	13.71	14.11	103%
B. SAN FERNANDO VALLEY	7.9%	17.62	19.92	113%
C. SAN GABRIEL VALLEY	7.5%	17.64	16.29	92%
D. SAN GABRIEL MTS.	13.4%	27.5	21.01	76%
E. LITTLE ROCK, BIG ROCK	4.5%	18.61	14.78	79%
F. SANTA MONICA MTS.	5.7%	19.96	25.98	130%
G. SANTA CLARA	18.9%	16.64	16.85	101%
H. DESERT	28.0%	7.83	8.22	105%
County *	100.0%	15.65	15.23	97%
LOS ANGELES (STATION #716)		15.51	14.79	95%
COGSWELL DAM (STATION #334B)		32.88	28.37	86%

P R E C I P I T A T I O N

ACTIVE RAINFALL STATIONS DURING WATER YEAR 2000-2001

Station No.	Station Name	Type of Gage	Thomas Guide Page	North Latitude	West Longitude	Gage Elev. (Feet)	Seasonal Total (inches)	Notes
5B	Calabasas	S	100 F3	34-09-24	118-38-14	924	22.36	
6	Topanga Patrol Station	A	590 A7	34-05-03	118-35-57	745	27.80	
10A	Bel Air Hotel	A	592 B7	34-05-11	118-26-45	540	16.13	I
11D	Upper Franklin Canyon Reservoir	SP	592 F2	34-07-10	118-24-35	867	25.17	
13C	North Hollywood-Lakeside	S	563 B5	34-08-46	118-21-13	550	22.86	
17	Sepulveda Canyon At Mulholland	A	561 E7	34-07-51	118-29-26	1425	27.75	
20B	Girard Reservoir	S	559 J4	34-09-07	118-36-36	986	24.70	
21B	Woodland Hills	S	560 A2	34-10-14	118-35-33	875	18.60	
23B	Chatsworth Reservoir	SP AP	529 G1	34-13-44	118-37-18	900	18.36	
25C	Northridge-L.A.D.W.P.	SP	530 H1	34-13-52	118-32-28	810	19.80	
32C	Newhall-Soledad Div.Hdqtrs	AP S	4550 J7	34-23-07	118-31-54	1243	18.95	
33A	Pacoima Dam	S A	4642 F7	34-19-48	118-23-59	1500	23.44	
42C	Redondo Beach-City Hall	S	762 G5	33-50-43	118-23-20	70	16.20	I
43D	Palos Verdes Estates	S	792 H4	33-47-58	118-23-29	216	17.07	
44A	Point Vicente Lighthouse	A	822 F5	33-44-30	118-24-38	125	11.93	
46D	Big Tujunga Dam	S A	4725 C6	34-17-40	118-11-14	2315	19.78	
47D	Clear Creek-City School	A	505 F1	34-16-38	118-10-12	3150	23.61	
54C	Loomis Ranch-Alder Creek	S A	4557 A4	34-20-55	118-02-54	4325	13.84	
63C	Santa Anita Dam	S A	537 E2	34-11-03	118-01-12	1400	21.08	
68C	Sawpit Dam	S A	537 J7	34-10-30	117-59-07	1375	23.13	
82F	Table Mountain	S	4561 G6	34-22-56	117-40-39	7420	20.50	
83B	Big Pines Recreation Park	A	4561 F6	34-22-44	117-41-20	6860	7.52	
89B	San Dimas Dam	S A	570 F2	34-09-10	117-46-17	1350	25.15	
93C	Claremont-Police Station	8.81	601 C3	34-05-45	117-43-18	1170	17.46	
95	San Dimas-Fire Warden	S	600 B3	34-06-26	117-48-19	955	10.96	
96C	Puddingstone Dam	S A	600 B4	34-05-31	117-48-24	1030	17.04	
106F	Whittier City Yard	S	677 B5	33-58-57	118-02-50	300	13.30	
107D	Downey-Fire Department	S	705 J7	33-55-48	118-08-47	110	14.98	
108D	El Monte Fire Station	S	597 C7	34-04-30	118-02-30	275	12.49	
109D	West Arcadia	S	566 G7	34-07-42	118-04-22	547	17.50	
120	Vincent Patrol Station	S	4375 H6	34-29-17	118-08-27	3135	8.00	
125B	San Francisquito Canyon Ph#1 - Saugus	SP	X	34-35-25	118-27-15	2105	16.46	
134C	Puddingstone Diversion	8.81	570 F5	34-07-52	117-46-55	1160	15.91	
144	Sierra Madre Dam	S	537 B4	34-10-34	118-02-32	1100	20.07	
156B	La Mirada-Standard Oil Company	A	737 F5	33-52-59	118-01-00	75	13.91	
158	Tanbark Flats	AP A	IX	34-12-20	117-45-40	2750	19.33	I
167C	Arcadia Pumping Plant #1	S	567 D2	34-09-31	118-02-02	611	17.23	
169	Sierra Madre Pumping Plant	SP	567 B2	34-09-47	118-02-21	700	19.26	
170F	Potrero Heights	S	636 H5	34-02-32	118-04-44	285	16.71	
172B	Duarte	S	568 C4	34-08-26	117-58-02	548	16.26	
174B	Glendora	S	570 A6	34-07-43	117-49-08	930	13.72	

LEGEND

Q	Questionalble
I	Incomplete
TI	Temporary Inactive
NA	Not Available
MF	Malfunction
S	Standard 8 inch diameter non-recording gage owned by the Public Works
8.81	8.81 inch diameter non-recording gage owned by the Department of Public Works
A	Automatic recording gage owned by the Department of Public Works
ST	Storage type gage owned by the Department of Public Works
SP	Standard 8 inch diameter non-recording gage owned by outside interest
AP	Automatic recording gage owned by outside interest
O.CO.	Orange County Thomas Guide page
V.CO.	Ventura County Thomas Guide page
S.B.CO.	San Bernardino County Thomas Guide page

P R E C I P I T A T I O N

ACTIVE RAINFALL STATIONS DURING WATER YEAR 2000-2001

Station No.	Station Name	Type of Gage	Thomas Guide Page	North Latitude	West Longitude	Gage Elev. (Feet)	Seasonal Total (inches)	Notes
175B	La Canada Irrigation District	S	535 A1	34-13-39	118-12-40	2020	21.38	
176	Altadena-Rubio Canyon	SP	536 A1	34-10-55	118-08-15	1125	18.58	
196C	La Verne-Fire Station	S	600 G2	34-06-06	117-46-20	1050	13.67	
201D	Hacienda Heights	A	677 J4	33-59-40	117-59-28	875	16.02	
210C	Brand Park	A	534 C6	34-11-18	118-16-20	1250	16.11	
216C	Glendale - Jackson	S	564 F5	34-09-54	118-15-01	615	9.72	
223C	Big Dalton Dam	S A	570 B1	34-10-06	117-48-36	1587	21.92	
225	Montana Ranch-Lakewood	S	766 C4	33-50-35	118-07-09	47	17.62	
227D	San Gabriel-Bruington-Orton	S	596 D2	34-06-18	118-06-32	472	17.59	
228C	Beverly Hills City Hall	AP S	632 G1	34-06-00	118-23-40	245	19.36	
235C	Henniger Flats	A 8.81	536 F5	34-11-38	118-05-17	2550	20.32	
237C	Stone Canyon Reservoir	SP	591 J3	34-06-21	118-27-13	865	26.97	
238	Hollywood Dam	SP	593 F2	34-07-04	118-19-55	750	19.42	
250D	Acton Camp	A	4465 A5	34-27-02	118-11-55	2625	8.52	
251C	La Crescenta	S	534 F1	34-13-20	118-14-40	1440	20.26	
252C	Castaic Dam	SP AP	4369	34-29-53	118-36-53	1150	15.86	I
255F	Mount San Antonio College-Spadra	S	639 J4	34-02-41	117-50-19	720	14.55	
261F	Acton-Escondido Canyon	A	4374 B6	34-29-42	118-16-22	2960	10.99	
269D	Diamond Bar Fire Station	SP AP	680 B2	33-59-50	117-48-55	870	15.70	
277	Sawmill Mountain	S	X	34-43-15	118-35-00	3700	23.75	
280C	Flintridge-Sacred Heart	A	535 E7	34-10-54	118-11-08	1600	19.10	
283C	Crystal Lake-East Pine Flat	A	4651 G1	34-19-02	117-50-28	5370	17.12	
287B	Glendora-City Hall	8.81	569 E5	34-08-09	117-51-52	785	18.94	
291	Los Angeles-96th and Central	A	704 E5	33-56-56	118-15-17	121	11.81	
292D	Encino Reservoir	S A	561 B4	34-08-56	118-30-57	1075	25.60	
293B	Los Angeles Reservoir	SP	481 E5	34-17-18	118-28-54	1150	21.08	
294B	Sierra Madre-Mira Monte Pumping Plant	SP	567 A1	34-10-11	118-02-51	985	21.52	
298C	Gorman - Sheriff	A	X	34-47-47	118-51-27	3835	.28	I
299F	Little Rock - Schwab	S	4287 H7	34-32-12	117-58-43	2800	7.22	
306H	Zuma Beach	S	667 B1	34-01-15	118-49-42	15	12.00	
321	Pine Canyon Patrol Station	A	4102 C3	34-40-24	118-25-45	3286	6.44	I
322	Munz Valley Ranch	S	4013 A4	34-42-50	118-21-15	2600	9.76	
334B	Cogswell Dam	S A	XI	34-14-37	117-57-35	2300	31.51	
336	Silver Lake Reservoir	SP	537 A1	34-06-08	118-15-54	445	16.49	
338C	Mt. Wilson-Observatory	SP	571 G6	34-14-07	118-04-28	5709	2.05	I
352B	Lechuza Patrol Station	AP S	594 A5	34-04-38	118-52-47	1620	6.17	
356C	Spadra-Lanterman Hospital	S A	640 B4	34-02-31	117-48-35	690	14.58	
372	San Francisquito Power House No.2	SP A	X	34-32-02	118-31-27	1580	16.82	
373C	Briggs Terrace	S A	504 H6	34-14-17	118-13-27	2200	23.21	
379B	San Gabriel-East Fork	A	510 B5	34-14-09	117-48-18	1600	8.28	
387B	Covina City Yard	SP	599 B5	34-05-02	117-53-57	508	14.85	

```
LEGEND
Q        Questionalble
I        Incomplete
TI       Temporary Inactive
NA       Not Available
MF       Malfunction
S        Standard 8 inch diameter non-recording gage owned by the Public Works
8.81     8.81 inch diameter non-recording gage owned by the Department of Public Works
A        Automatic recording gage owned by the Department of Public Works
ST       Storage type gage owned by the Department of Public Works
SP       Standard 8 inch diameter non-recording gage owned by outside interest
AP       Automatic recording gage owned by outside interest
O.CO.    Orange County Thomas Guide page
V.CO.    Ventura County Thomas Guide page
S.B.CO.  San Bernardino County Thomas Guide page
```

P R E C I P I T A T I O N

ACTIVE RAINFALL STATIONS DURING WATER YEAR 2000-2001

Station No.	Station Name	Type of Gage	Thomas Guide Page	North Latitude	West Longitude	Gage Elev. (Feet)	Seasonal Total (inches)	Notes
388D	Paramount-County Fire Department	8.81	735 G4	33-53-50	118-10-02	80	19.45	
390B	Morris Dam	SP	539 C6	34-10-53	117-52-43	1210	19.19	
391C	Montebello-Fire Department	8.81	676 E2	34-01-08	118-06-15	250	10.16	
394	Highland Park	S	595 E1	34-07-06	118-10-39	620	9.53	
402F	Cedar Springs	A	XI	34-21-21	117-52-34	6780	.08	I
405B	Soledad Canyon	S	4463 J6	34-26-23	118-17-33	2150	15.02	
406C	West Azusa	S	598 H2	34-06-53	117-54-56	505	17.07	
409B	Pyramid Reservoir	SP AP	X	34-40-34	118-46-47	2505	20.89	
415	Signal Hill-City Hall	S A	795 G3	33-47-49	118-10-03	140	14.56	
423C	Angeles Forest-Aliso	A	XI	34-24-57	118-05-26	3920	2.08	I
425B	San Gabriel Dam	S A	509 E3	34-12-19	117-51-38	1481	28.74	
434	Agoura	A	558 B7	34-08-08	118-45-08	800	24.51	
435	Monte Nido	A	628 J1	34-04-41	118-41-35	600	26.21	
436C	Hansen Dam	AP	502 G3	34-16-08	118-23-59	1110	16.17	
446	Aliso Canyon-Oat Mountain	A	480 F3	34-18-53	118-33-25	2367	19.34	
447C	Carbon Canyon	S	629 F6	34-02-18	118-38-56	50	19.33	
449B	Eaton Wash Dam	S A	566 E1	34-10-06	118-05-33	880	13.89	I
453D	Devil's Gate Dam	A	535 E7	34-10-53	118-10-27	980	17.47	
455B	Lancaster-State Hwy Maintenance Sta.	S	4105 J1	34-40-57	118-08-02	2395	7.26	
462B	Los AngelesHillcrest Country Club	S	632 F4	34-02-54	118-24-06	185	17.96	
465C	Sepulveda Dam	AP	561 G2	34-10-06	118-28-11	683	20.69	
482	Los Angeles-U.S.C.	S	674 A1	34-01-14	118-17-15	208	15.93	
488B	Kagel Canyon Patrol Station	S	482 D5	34-17-45	118-22-30	1450	19.28	
491D	Pacific Palisades	S	630 J6	34-02-22	118-31-43	293	23.87	
492A	Chilao - State Highway Maintenance Sta.	A	4557 F1	34-19-05	118-00-30	5275	6.40	I
497	Claremont-Slaughter	8.81	571 B7	34-07-35	117-43-55	1350	17.01	
517B	Lewis Ranch	A	XI	34-25-12	117-53-11	4615	3.12	I
542	Fairmont	SP	X	34-42-15	118-25-40	3050	.62	I
564C	Llano	S	4379 F5	34-29-13	117-50-02	3390	7.35	
591B	Santa Anita Reservoir	SP	536 E7	34-11-08	118-06-16	1205	19.69	
598D	Neenach-Check 43-California D.W.R.	SP	X	34-47-40	118-37-15	2965	12.79	
610B	Pasadena-City Hall	SP	565 J4	34-08-54	118-08-36	864	18.30	
612B	Pasadena-Chlorine Plant	SP	535 F3	34-12-04	118-09-49	1160	20.39	
613C	Pasadena Fire Station	SP	566 A6	34-07-15	118-08-05	779	18.29	
619	San Antonio Canyon-Sierra Power House	A	XI	34-12-29	117-40-26	3110	11.48	I
627	San Gabriel Canyon-Power House	SP A	568 J3	34-09-20	117-54-28	744	19.65	
634C	Santa Monica	S	671 E2	34-00-43	118-29-27	94	17.38	
662D	Long Beach Airport	SP	791 J1	33-49-00	118-09-00	34	2.30	I
680B	Westwood (U.C.L.A.)	SP	632 B1	34-04-10	118-26-30	430	1.84	I
683B	Sunset Ridge	S A	535 F5	34-12-53	118-08-47	2110	21.96	
694G	Big Tujunga Canyon-Cmp	A	X	34-17-22	118-17-17	1525	16.16	

```
LEGEND
Q         Questionalble
I         Incomplete
TI        Temporary Inactive
NA        Not Available
MF        Malfunction
S         Standard 8 inch diameter non-recording gage owned by the Public Works
8.81      8.81 inch diameter non-recording gage owned by the Department of Public Works
A         Automatic recording gage owned by the Department of Public Works
ST        Storage type gage owned by the Department of Public Works
SP        Standard 8 inch diameter non-recording gage owned by outside interest
AP        Automatic recording gage owned by outside interest
O.CO.     Orange County Thomas Guide page
V.CO.     Ventura County Thomas Guide page
S.B.CO.   San Bernardino County Thomas Guide page
```

P R E C I P I T A T I O N

ACTIVE RAINFALL STATIONS DURING WATER YEAR 2000-2001

Station No.	Station Name	Type of Gage	Thomas Guide Page	North Latitude	West Longitude	Gage Elev. (Feet)	Seasonal Total (inches)	Notes
695B	Tujunga Canyon-Vogel Flat	S	X	34-17-12	118-13-32	1850	27.21	
716	Los Angeles-Ducommun St.	SP A AP	634 H4	34-03-09	118-14-13	306	17.36	
726C	Angeles Crest Guard Station	S	X	34-14-01	118-11-04	2300	2.06	I
734C	Los Angeles International Airport	SP AP	702 G5	33-56-25	118-23-44	105	1.12	I
735H	Bell Canyon	A	529 D6	34-11-40	118-39-23	895	28.48	
742C	San Gabriel Fire Department	SP	596 F4	34-06-11	118-05-56	445	1.29	I
747	Sandberg-Airways Station	SP AP	X	34-44-47	118-43-29	4517	1.20	I
750B	Palmdale-F.A.A. Airport	S	4196 E5	34-37-20	118-05-00	2528	5.14	
771B	Pacific Palisades-Riviera Country Club	S	631 D4	34-03-03	118-29-58	315	21.05	Q
794	Lower Franklin Reservoir	SP	592 F6	34-05-43	118-24-40	585	22.39	
795	Pasadena-Jourdan	SP	566 F5	34-08-52	118-05-14	705	18.53	
797	De Soto Reservoir	SP	500 B2	34-16-17	118-35-12	1127	19.40	
801B	Magic Mountain	AP	X	34-23-18	118-19-27	4720	4.13	
802C	Eagle Rock Reservoir	SP	565 C5	34-08-47	118-11-20	970	15.23	
807	Ascot Reservoir	SP AP	595 C6	34-04-46	118-11-14	620	19.12	
1006	San Pedro-City Reservoir	SP A	824 B4	33-44-37	118-17-47	150	19.48	
1011B	Palos Verdes Fire Station	S	823 D3	33-45-25	118-21-11	1275	22.08	
1025	Malibu Beach-Dunne	S	628 G7	34-02-00	118-42-42	160	.17	I
1029C	Tujunga-Mill Creek Summit ranger station	AP S	X	34-23-22	118-04-49	4990	13.20	
1037	Arcadia-Arboretum	S	567 A5	34-08-48	118-02-59	565	16.01	
1041B	Santa Fe Dam	AP	598 A	34-07-04	117-58-24	427	17.28	
1050F	Old Topanga Canyon	S	108 F3	34-06-24	118-37-43	1000	32.51	I
1051B	Canoga Park-Pierce College	SP	530 D	34-10-51	118-34-23	800	20.91	
1058B	Palmdale	SP AP	4196	34-35-17	118-05-31	2595	5.85	
1060B	Little Rock-Sycamore Camp	A	XI	34-25-02	117-58-13	4000	3.48	I
1070	Manhattan Beach	S	732 J	33-53-00	118-23-19	182	15.54	
1071B	Descanso Gardens	S	535 B	34-12-07	118-12-46	1325	21.80	
1072B	Little Tujunga Ranger Station	SP A	4723	34-17-37	118-21-38	1275	10.94	I
1074	Little Gleason	A	X	34-22-43	118-08-57	5600	12.20	
1076B	Monte Cristo Ranger Station	SP	XI	34-19-42	118-07-20	3360	17.49	
1081B	Glendale-Gregg	SP	534 F	34-11-45	118-14-30	1350	19.55	
1087	Green-Verdugo Pumping Plant	S	503 D	34-15-25	118-20-11	1340	17.16	
1088B	La Habra Heights-Mutual Water Co.	S A	708 D	33-56-55	117-57-51	445	16.33	
1095	Orange County Reservoir	SP AP	OC 2 F	33-56-07	117-52-58	660	15.48	
1107D	La Tuna Debris Basin	A	503 E	34-14-13	118-19-37	1160	13.45	
1113	Dominguez Water Co.	A	764 J	33-49-54	118-13-30	30	8.11	I
1114B	Whittier Narrows Dam	AP	636 H	34-01-29	118-05-02	239	14.67	
1115	San Antonio Dam	AP SP	571 J	34-09-24	117-40-20	2120	21.66	
1126A	Los Angeles-East Valley	8.81	532 E	34-12-30	118-24-35	780	18.61	
1129B	Nicholas Canyon	S	626 A	34-02-52	118-54-57	340	17.57	
1152	Clear Creek Ranger Station	S	XI	34-16-15	118-09-11	3625	18.74	

```
LEGEND
Q         Questionalble
I         Incomplete
TI        Temporary Inactive
NA        Not Available
MF        Malfunction
S         Standard 8 inch diameter non-recording gage owned by the Public Works
8.81      8.81 inch diameter non-recording gage owned by the Department of Public Works
A         Automatic recording gage owned by the Department of Public Works
ST        Storage type gage owned by the Department of Public Works
SP        Standard 8 inch diameter non-recording gage owned by outside interest
AP        Automatic recording gage owned by outside interest
O.CO.     Orange County Thomas Guide page
V.CO.     Ventura County Thomas Guide page
S.B.CO.   San Bernardino County Thomas Guide page
```

P R E C I P I T A T I O N

ACTIVE RAINFALL STATIONS DURING WATER YEAR 2000-2001

Station No.	Station Name	Type of Gage	Thomas Guide Page	North Latitude	West Longitude	Gage Elev. (Feet)	Seasonal Total (inches)	Notes
1158	Torrance Municipal Airport	S	793 E	33-47-59	118-20-08	102	10.20	I
1166B	Mile High Ranch	S	XI	34-24-40	117-46-15	5280	13.51	
1172B	Piru Canyon Above Piru Lake	AP	V.CO.	34-30-48	118-45-24	1120	10.94	
1191	Bear Divide	S	128 F6	34-21-35	118-23-37	2700	22.71	
1193	Westlake Village	S	557 C	34-08-19	118-49-05	885	6.11	I
1194	Santa Ynez Reservoir	S	630 E	34-04-23	118-33-59	735	28.39	
1212	Lancaster Fss/Faa	SP	4014	34-44-OO	118-13-00	2340	.33	I
1216	Rancho Palos Verdes	S	822 H	33-45-10	118-23-32	780	16.67	
1217	Los Angeles Country Club	S	632 D	34-04-10	118-25-17	380	23.37	
1222	Northridge-Garland	8.81	501 C	34-14-17	118-30-59	911	20.37	
1223	Woodland Hills-Sherman	8.81	559 E	34-10-06	118-38-57	1035	20.88	
1239	Malibu-Big Rock Mesa	A	629 H	34-02-34	118-37-16	725	24.10	
1240	Pearblossom-Calif.D.W.R. Booster Sta.	SP AP	4378	34-30-32	117-55-15	3050	7.52	
1243	Redman	A	XI	34-45-52	117-55-30	2360	3.52	I
1244	Lancaster-Roper	A	4107	34-40-27	118-00-37	2450	1.68	
1246	Scott Ranch	A	XI	34-46-59	118-28-10	2710	1.40	I
1247	North Lancaster	A	3926	34-45-41	118-07-30	2310	4.28	
1248	Mescal-Smith	A	XI	34-28-03	117-42-40	3810	1.04	I
1249	Relay	A	XI	34-45-43	117-47-55	3140	2.40	Q
1250	Avek	A	4288	34-32-21	117-55-23	2825	4.48	
1252	Palos Verdes Landfill	SP	793 D	33-45-40	118-20-03	400	22.60	
1253	Carson-County Sanitation	SP	794 C	33-48-07	118-16-58	40	16.46	
1254	Long Beach Reclamation Plant	SP	796 G	33-48-11	118-05-20	20	15.67	
1255	Los Coyotes Reclamation Plant	SP	736 E	33-53-05	118-06-24	70	16.95	
1256	South Gate Transfer Station	SP	705 G	33-56-40	118-09-56	100	14.77	
1257	San Jose Creek Reclamation Plant	SP	637 F	34-01-55	118-01-16	275	14.77	
1258	Puente Hills Landfill	SP	637 D	34-01-35	118-01-49	300	17.31	
1259	Whittier Narrows Reclamation Plant	SP	636 J	34-03-59	118-03-54	225	11.51	
1260	Spadra Landfill	SP	640 A	34-02-36	117-49-50	700	13.30	I
1261	La Canada Reclamation Plant	SP	535 D	34-13-00	118-11-14	1800	21.52	
1262	Saugus Reclamation Plant	SP	4550	34-24-48	118-32-23	1150	16.52	
1263	Valencia Reclamation Plant	SP	4549	34-25-55	118-37-13	1000	14.29	
1264	Calabasas Landfill	SP	558 G	34-08-25	118-42-35	800	22.17	
1265	Scholl Canyon Landfill	SP	565 C	34-08-38	118-11-07	1000	17.40	
1266	Mission Canyon Landfill	SP	591 G	34-08-40	118-28-45	1150	21.63	
1267	Lancaster Reclamation Plant	SP	3925	34-46-38	118-09-11	2302	4.87	
1268	Palmdale Reclamation Plant	SP	4196	34-35-30	118-05-10	2565	6.42	
1271	Pomona Waste Reclamation Plant	SP	640 E	34-03-18	117-47-34	786	15.95	
1274	Whittier - Valna Drive	S	707 F	33-57-39	118-01-10	255	18.18	I
1277	DPW Headquarters, Fremont	A	595 H6	34-05-12	118-09-01	450	16.34	
1278	La Canada Flintridge		535 B1	34-13-22	118-12-17		24.95	

```
LEGEND
Q        Questionalble
I        Incomplete
TI       Temporary Inactive
NA       Not Available
MF       Malfunction
S        Standard 8 inch diameter non-recording gage owned by the Public Works
8.81     8.81 inch diameter non-recording gage owned by the Department of Public Works
A        Automatic recording gage owned by the Department of Public Works
ST       Storage type gage owned by the Department of Public Works
SP       Standard 8 inch diameter non-recording gage owned by outside interest
AP       Automatic recording gage owned by outside interest
O.CO.    Orange County Thomas Guide page
V.CO.    Ventura County Thomas Guide page
S.B.CO.  San Bernardino County Thomas Guide page
```

P R E C I P I T A T I O N

DAILY PRECIPITATION SUMMARY

See Appendix A

P R E C I P I T A T I O N

LOCATION MAP

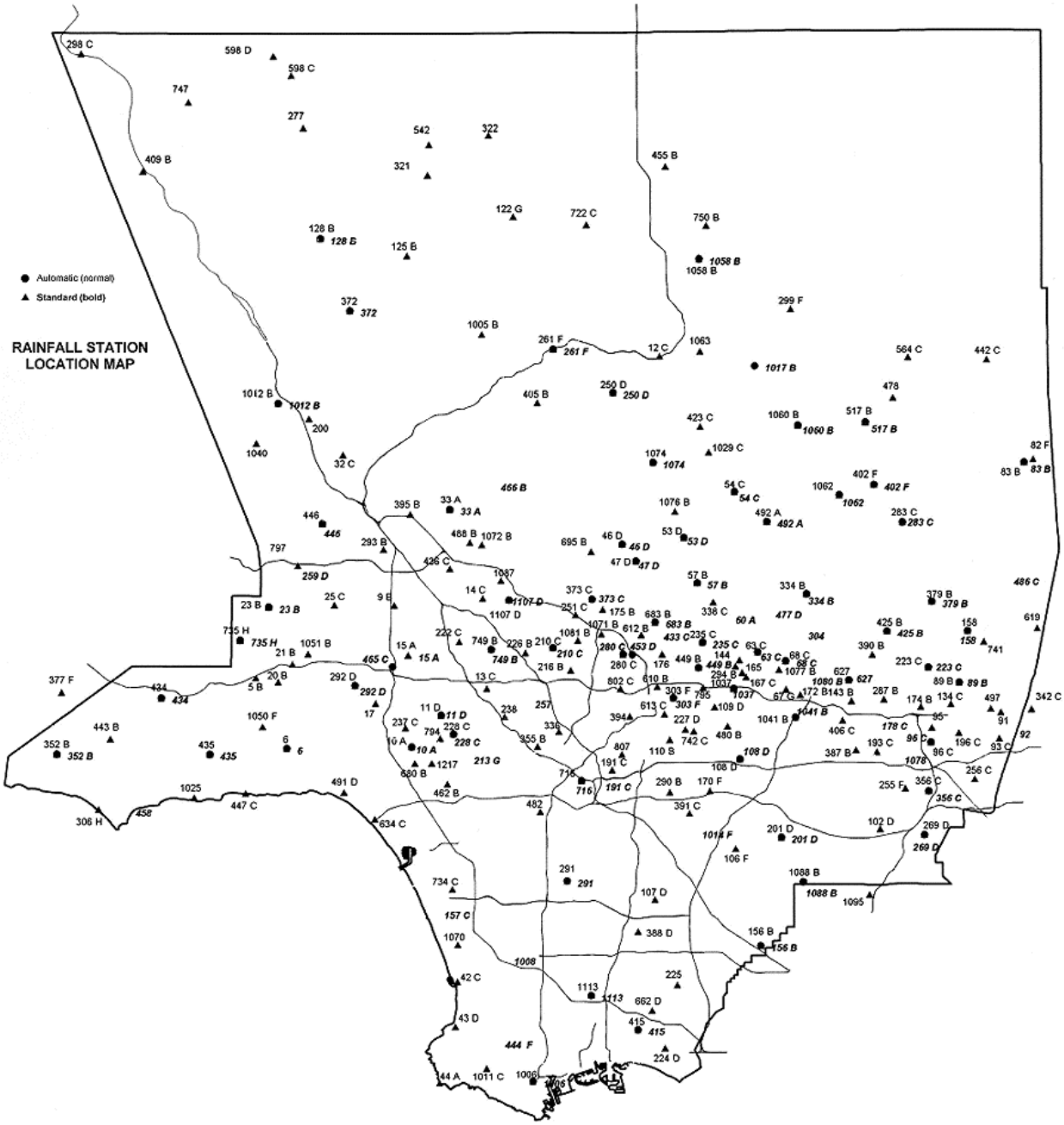

E V A P O R A T I O N

EVAPORATION

Monthly and seasonal data for 13 active evaporation stations were reported to the Department during the reporting period. Daily records of active and inactive Department stations, as well as some stations of other agencies, are available in the Department's files. This data can be obtained by contacting the custodian of hydrologic records.

COOPERATION:

The Department receives evaporation data from The Metropolitan Water District, Palmdale Water District, California Department of Water Resources, and Descanso Gardens.

LENGTH OF RECORD:

The Los Angeles County Flood Control District (now administered by the Department) installed its first land pan in March 1929 at Santa Anita Dam. The Department has 30 evaporation stations which have records of 15 seasons or more in the Department's files.

CUSTODIAN:

Unpublished information may be obtained by contacting:
Los Angeles County Department of Public Works
Water Resources Division
P.O. Box 1460
Alhambra, CA 91802-1460
...or telephone: (626) 458-6120

E V A P O R A T I O N

ACTIVE STATIONS

NO.	STATION NAME	EQUIPMENT	ELEV OF PAN	THOMAS GUIDE	NORTH LAT	WEST LONG
33 A	Pacoima Dam	24X36 S	1500 ft.	482 F1	34-19-48	118-23-59
46 D	Big Tujunga Dam	24X36 S	2315 ft.	xi	34-17-40	118-11-14
63 C	Santa Anita Dam	24X36 S	1400 ft.	710 B2	34-11-03	118-01-12
89 B	San Dimas Dam	24X36 S	1350 ft.	470 F2	34-09-10	117-46-17
96 C	Puddingstone Dam	24X36 S	1030 ft.	600 A4	34-05-31	117-48-24
223 B	Big Dalton Dam	24X36 S	1587 ft.	570 B4	34-10-06	117-48-36
252 C	Castaic Reservoir	48X10 S	1150 ft.	4369 H6	34-29-53	118-36-53
334 B	Cogswell Dam	24X36 S	2300 ft.	ix	34-14-37	117-57-35
390 B	Morris Dam	72X36 US	1210 ft.	ix	34-10-53	117-52-43
409 B	Pyramid Reservoir	48X10 S	2505 ft.	593 E1	34-40-34	118-46-47
425 B	San Gabriel Dam	24X36 S	1481 ft.	ix	34-12-19	117-51-38
1058 B	Palmdale	24X36 S	2595 ft.	4196 E6	34-35-17	118-05-31
1071 B	Descanso Gardens	24X36 S	1325 ft.	535 B4	34-12-07	118-12-46

FOOTNOTES
24X36 S Screened land pan, 24 inches in diameter by 36 inches deep.
48X10 S Screened land pan, 48 inches in diameter by 10 inches deep.
72X36 US Unscreened land pan, 72 inches in diameter by 36 inches deep.

E V A P O R A T I O N

MONTHLY SUMMARY

ID	Station Name	Oct	Nov	Dec	Jan	Feb	Mar	Apr	May	Jun	Jul	Aug	Sep	Total
33-A	Pacoima Dam	5.37	6.97	8.21	5.57	3.53	4.71	5.55	6.94	9.30	8.60	9.42	9.15	83.28
46-D	Big Tujunga Dam	5.99	4.93	6.02	4.09	2.77	4.91	5.10	10.50	12.38	10.31	14.88	11.42	93.27
63-C	Santa Anita Dam	3.42	3.88	3.93	2.91	2.21	1.68	3.01	3.75	5.35	5.63	6.08	5.95	47.78
89-B	San Dimas Dam	3.14	1.99	1.93	1.21	1.08	1.79	3.18	5.53	7.29	10.14	7.97	5.97	51.20
96-C	Puddingstone Dam	3.51	2.89	2.82	2.51	1.75	2.38	4.02	5.81	7.05	7.61	7.91	6.39	54.61
223-B	Big Dalton Dam	3.18	2.09	1.91	1.40	1.40	1.76	2.60	4.39	6.25	6.61	6.66	4.88	43.09
334-B	Cogswell Dam	3.56	2.18	2.11	1.19	0.84	1.95	2.76	5.61	7.44	8.18	8.31	5.82	49.91
390-B	Morris Dam	4.87	4.45	4.45	3.23	2.27	3.89	5.35	7.70	10.09	10.70	10.97	9.40	77.38
425-B	San Gabriel Dam	4.71	4.29	4.09	3.07	2.24	3.06	4.38	6.30	8.04	8.14	8.66	7.87	64.83
1058-B	Palmdale	5.77	3.45	2.48	2.37	2.13	N/A	6.01	10.38	13.28	13.43	13.83	9.28	82.37
1071-B	Descanso Gardens	2.91	2.18	1.87	1.65	1.33	2.27	2.82	4.73	6.64	6.98	7.37	5.68	46.41

Units are in inches.

E V A P O R A T I O N

LOCATION MAP

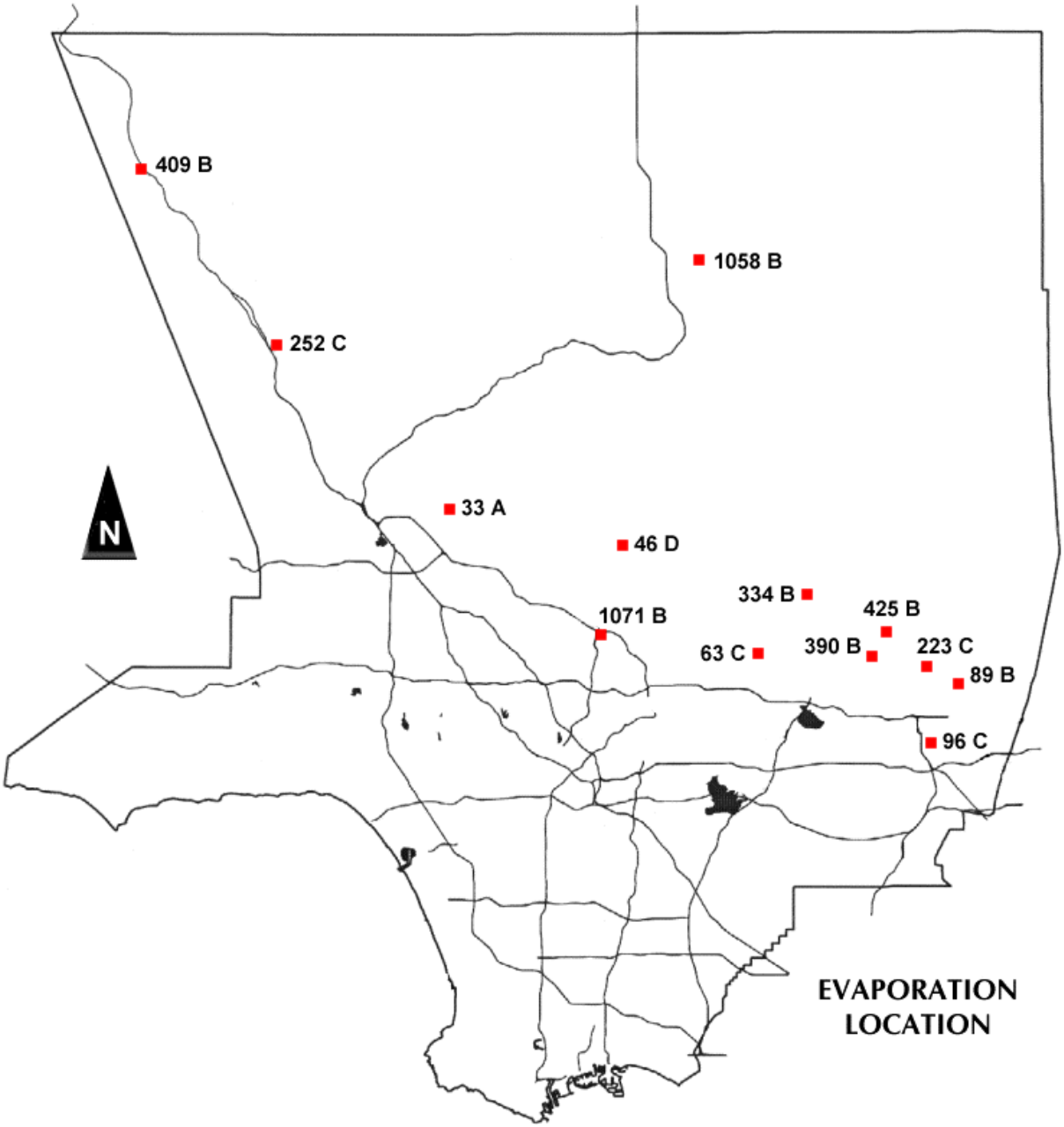

R U N O F F

RUNOFF

The Department operates 65 streamflow measurement stations (62 water-stage recording stations and 3 witness gages). Daily mean flow data and maximum instantaneous flow for each station were collected for these stations during the reporting period. Additional data can be obtained by contacting the custodian of hydrologic records.

ALERT SYSTEM
Automated Local Evaluation in Real Time

The Department operates and maintains the ALERT computer system to monitor meteorological conditions at 23 river stage locations in the County.

The Department's ALERT System also receives rainfall, streamflow, and reservoir data from the Corps of Engineers' Los Angeles Telemetry System.

CUSTODIAN:

Unpublished information may be obtained by contacting:

Los Angeles County Department of Public Works
Water Resources Division
P.O. Box 1460
Alhambra, CA 91802-1460
...or telephone: (626) 458-6120

COOPERATION:

The Department receives or has access to streamflow data from other agencies. Data from 5 of the Department's stations are published in the United States Geological Survey's annual water supply papers.

Agencies with which the Department exchanges data are:

- United States Geological Survey, Water Resource Division
- United States Army Corps of Engineers
- State Department of Water Resources
- The Metropolitan Water District of Southern California
- San Gabriel River Water Committee

R U N O F F

INDEX OF STREAM FLOW MEASURING STATIONS

STATION NO.	STATION NAME	THOMAS GUIDE PAGE	REGULATED	DRAINAGE AREA	LENGTH OF RECORD
F81D-R	ALHAMBRA WASH above Klingerman Street	636 G3	No	15.20	9/2/36
F317-R	ARCADIA WASH below Grand Avenue	597 C4	Yes	8.50	12/12/55
F277-R	ARROYO SECO below Devils Gate Dam	535 E7	Yes	32.50	11/30/42
F220B-R	AZUSA CONDUIT (sandbox 10ft weir)	509/539	Yes	0.00	10/23/63
F250-R	AZUSA CONDUIT (sandbox 20 ft weir)	509/539	Yes	202.70	2/14/35
F38C-R	BALLONA CREEK above Sawtelle Blvd.	672 G4	Yes	88.60	8/10/67
F120B-R	BIG DALTON CREEK beolw Big Dalton Dam	509/540	Yes	4.80	6/3/40
F394-R	BIG ROCK CREEK upstream from Pallett Creek	4469 D3	No	34.30	4/22/83
F168-R	BIG TUJUNGA CREEK below Big Tujunga Dam	4645/4725	Yes	82.30	12/8/31
F377-R	BOUQUET CANYON CREEK at Urbandale Avenue	4461 C5	Yes	51.90	10/11/67
F329-R	BRADBURY CHANNEL below Central Avenue	568 C5	Yes	3.30	6/14/57
F342-R	BRANFORD STREET CHANNEL below Sharp Avenue	502 E7	Yes	5.01	1/12/62
E285-R	BURBANK WESTERN STORM DRAIN at Riverside Dr.	563 H3	Yes	25.00	10/1/49
F37B-R	COMPTON CREEK near Greenleaf Drive	734 J6	No	22.60	10/3/38
F354-R	COYOTE CREEK below Spring Street	796 H2	Yes	185.00	12/17/63
F274B-R	DALTON WASH at Merced Avenue	638 D1	Yes	35.95	11/2/58
F271-R	EATON WASH below Eaton Wash Dam	566 F1	Yes	12.40	10/1/40
F318-R	EATON WASH at Loftus Drive	597 A7	Yes	22.80	2/23/56
U7-R	FISH CREEK above mouth of canyon	568 G1	No	6.36	7/1/17
F251-R	LEAKAGE at Toe of Cogswell Dam	508 C5	Yes	39.20	4/26/35
L1-R	LITTLE ROCK CREEK above Little Rock Dam	4467 D2	No	49.20	10/1/30
F356-R	LIVE OAK CREEK below Live Oak Dam	571 A5	Yes	2.28	11/29/63
F300-R	LOS ANGELES RIVER at Tujunga Avenue	562 J6	Yes	401.00	5/8/50
F57C-R	LOS ANGELES RIVER above Arroyo Seco	594 H6	Yes	511.00	12/8/39
F319-R	LOS ANGELES RIVER below Wardlow River Road	765 C1	Yes	815.00	1/13/56
F34D-R	LOS ANGELES RIVER below Firestone Blvd.	705 F4	Yes	596.00	11/12/56
F130-R	MALIBU CREEK below Cold Creek	628 H1	Yes	104.96	1/17/31
F395-R	MESCAL CREEK at mouth of canyon	4471 D4	No	5.71	1/28/83
F328-R	MINT CANYON CREEK at Fitch Avenue	4462 C6	No	26.90	10/26/56
F181-R	MONTEBELLO STORM DRAIN above Rio Hondo	676 E4	No	9.60	1/12/32
F118B-R	PACOIMA CREEK FLUME below Pacoima Dam	4642 F7	Yes	28.20	2/9/35
F305-R	PACOIMA DIVERSION at Branford Street	502 D7	Yes	48.80	10/30/53
F122-R	PALLETT CREEK at Valyermo Highway	4469 D2	No	15.80	10/31/61
F45B-R	RIO HONDO above Stuart and Gray Road	705 G4	Yes	140.00	11/20/51
F192B-R	RIO HONDO below Lower Azusa Avenue	597 D5	Yes	40.90	12/18/58
F313B-R	RIO HONDO BYPASS - Zone one Dicth	637 A7	Yes	Controlled	11/28/83
F338-R	RUBIO DIVERSION CHANNEL below Gooseberry Inlet	536 C5	Yes	2.10	12/16/59
F82C-R	RUBIO WASH at Glendon Way	596 H7	Yes	10.90	11/6/36
F303-R	SAN DIMAS CREEK below San Dimas Dam	570 F2	Yes	16.20	12/24/51
F218-R	SAN DIMAS WASH below Puddingstone Diversion	570 E5	Yes	19.90	1/26/33
F263C-R	SAN GABRIEL RIVER below San Gabriel River Pkwy	676 J2	Yes	206.30	8/9/68
F42B-R	SAN GABRIEL RIVER above Spring Street	796 G1	Yes	231.00	11/16/64
F209-R	SAN GABRIEL RIVER below Cogswell Dam	508 C5	Yes	41.00	12/8/33
F262C-R	SAN GABRIEL RIVER above Florence Avenue	706 E5	Yes	215.80	8/6/68
U8-R	SAN GABRIEL RIVER below Morris Dam	569 B2	Yes	212.40	5/18/94
G44B-R	SAN GABRIEL RIVER above Whittier Narrow Dam	637 C6	No		1/6/48
F261C-R	SAN GABRIEL RIVER below Valley Blvd.	637 F3	Yes	118.00	11/29/60
F190-R	SAN GABRIEL RIVER at Foothill Blvd.	568 E5	Yes	230.00	4/25/32
E281-R	SAN GABRIEL RIVER below Santa Fe Dam	568 B2	No		
F312B-R	SAN JOSE CHANNEL below Sevent Avenue	637 G6	Yes	83.40	4/23/92

R U N O F F

INDEX OF STREAM FLOW MEASURING STATIONS

STATION NO.	STATION NAME	THOMAS GUIDE PAGE	REGULATED	DRAINAGE AREA	LENGTH OF RECORD
F193B-R	SANTA ANITA WASH at Longden Avenue	597 F2	Yes	18.80	1/5/60
F260C-R	SANTA ANITA WASH below Foothill Blvd.	567 D4	Yes	17.20	12/11/59
F92-R	SANTA CLARA RIVER at Old Road Bridge	4450 C2	Yes	410.40	9/1/81
F280-R	SANTA FE DIVERSION CHANNEL below Santa Fe Dam	598 B2	Yes	Controlled	10/1/42
F125-R	SANTIAGO CREEK above Little Rock Creek	4467 D2	No	11.20	9/29/53
F278-R	SAWPIT CREEK below Sawpit Dam	537 H7	Yes	3.30	2/6/42
F194B-R	SAWPIT WASH below Live Oak Avenue	597 G2	Yes	16.10	12/5/60
F32B-R	THOMPSON CREEK below Thompson Creek Dam	571 E4	Yes	3.70	10/1/44
F54C-R	TOPANGA CREEK above mouth of canyon	630 C3	Yes	18.00	1/1/30
F252-R	VERDUGO WASH at Estelle Avenue	564 C3	Yes	26.80	12/2/35
F304-R	WALNUT CREEK above Puente Avenue	638 B1	Yes	57.60	10/14/52
F40-R	WALNUT CREEK below Puddingstone Dam	600 B4	Yes	33.20	12/28/27

R U N O F F

STREAM GAGING STATION INFORMATION

See Appendix B

DAILY DISCHARGE

See Appendix C

STREAM GAGING STATION PEAK FLOW

See Appendix D

R U N O F F

LOCATION MAP

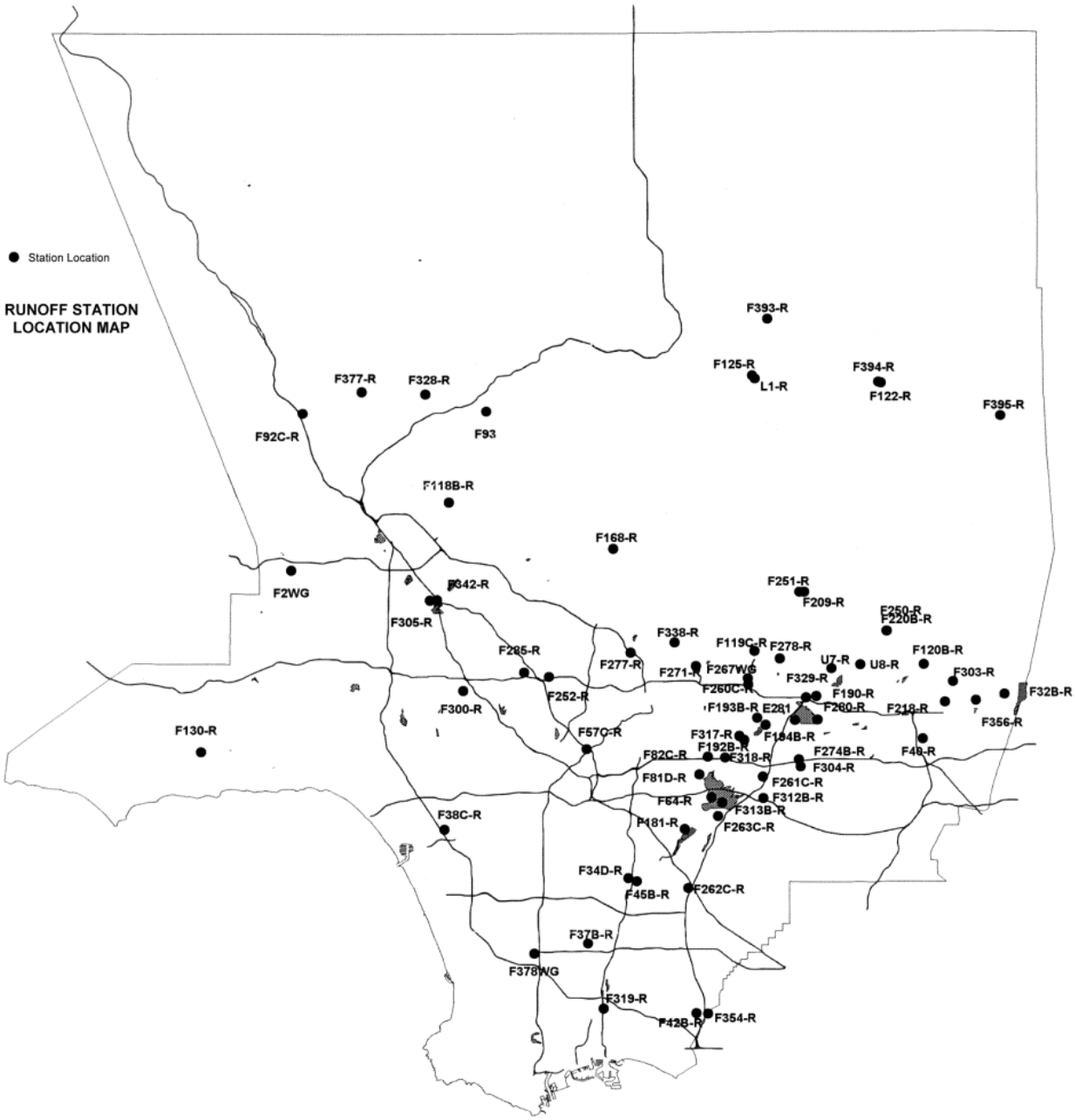

R E S E R V O I R S

RESERVOIRS

Following the damaging flood of 1914 and creation of the Los Angeles County Flood Control District in 1915, a program of flood control and water conservation was initiated by the District. Part of this program included the construction of 15 dams which were completed between 1920 and 1939. These dams continued to be operated and maintained by the Department to control flood waters during storm periods. The Department makes post storm releases, when feasible, in amounts that can be conserved in downstream spreading grounds and by channel percolation. In addition, five Corps of Engineers' dams, Lopez, Hansen, Santa Fe, Sepulveda, and Whittier Narrows Dams, are operated by the Corps in conjunction with the Department dams to achieve flood control and/or water conservation.

RECORDS:

The Department's 15 dams and reservoirs' locations are shown on the map. Data on the yearly reservoir operation summaries for each reservoir are provided by selecting from the index on the left. Data for these facilities can be obtained by contacting the custodian of hydrologic records.

Los Angeles County Department of Public Works
Water Resources Division
P.O. Box 1460
Alhambra, CA 91802-1460

...or telephone: (626) 458-6120

R E S E R V O I R S

YEARLY RESERVOIR OPERATION SUMMARY

See Appendix E

Location	Appendix E
Big Dalton Dam	Appendix E 01
Big Tujunga Dam	Appendix E 02
Cogswell Dam	Appendix E 03
Devil's Gate Dam	Appendix E 04
Eaton Wash Dam	Appendix E 05
Live Oak Dam	Appendix E 06
Morris Dam	Appendix E 07
Pacoima Dam	Appendix E 08
Puddingstone Dam	Appendix E 09
Puddingstone Diversion	Appendix E 10
San Dimas Dam	Appendix E 11
San Gabriel Dam	Appendix E 12
Santa Anita Dam	Appendix E 13
Sawpit Dam	Appendix E 14
Thompson Creek Dam	Appendix E 15

R E S E R V O I R S

FACILITIES

DPW Dams and Reservoirs	Current Uses	Construction Completed	Drainage Area (sq.mi)	Original Capacity (acre-ft)	Spillway Elev. (ft)	Location
Big Dalton Dam	Flood control and water conservation	August 1929	4.50	1053	1706	4 miles northeast of Glendora
Big Tujunga Dam	Flood control and water conservation	July 1931	82.30	6240	2290	10 miles northeast of Sunland
Cogswell Dam	Flood control and water conservation	April 1934	39.20	12298	2385	22 miles north of Azusa
Devil's Gate Dam	Flood control and water conservation	June 1920	31.90	4601	1054	Arroyo Seco, northwest of Pasadena
Eaton Wash Dam	Flood control and debris storage	February 1937	12.40	956	887	Eaton Wash, northeast of Pasadena
Live Oak Dam	Flood control and water conservation	November 1922	2.30	250	1496	25 miles northeast of La Verne
Morris Dam	Water conservation	1935	217.0	39300	1152	5 miles north of Azusa
Pacoima Dam	Flood control and water conservation	February 1929	28.20	6060	1950	4 miles northeast of San Fernando
Puddingstone Dam	Flood control and water conservation	January 1928	33.10	17398	970	1 mile south of San Dimas
Puddingstone Diversion	Flood control and diversion of flow	July 1928	3.70	148	1152	2 miles northeast of San Dimas
San Dimas Dam	Flood control and diversion of flow	September 1922	16.20	1496	1462	3 miles northeast of San Dimas
San Gabriel Dam	Flood control and water conservation	July 1939	202.70	53344	1453	7.5 miles north of Azusa
Santa Anita Dam	Flood control and water conservation	March 1927	10.80	1376	1316	2.5 miles north of Arcadia
Sawpit Dam	Flood control and water conservation	June 1927	3.20	476	1360	2 miles north of Monrovia
Thompson Creek Dam	Flood control and water conservation	March 1928	3.50	812	1634	3 miles north of Clarement

R E S E R V O I R S

LOCATION MAP

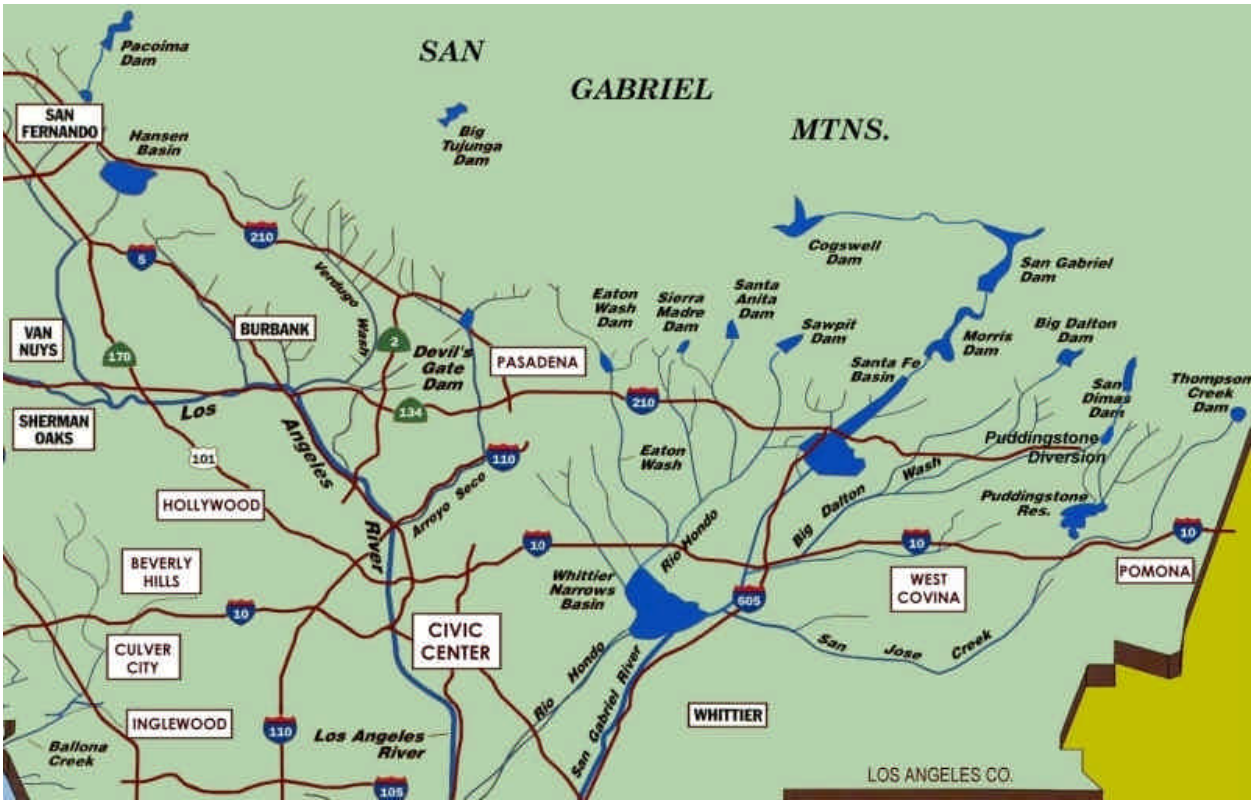

E R O S I O N C O N T R O L

EROSION CONTROL

Each year eroded material in various forms (debris consisting of rock, sand, trees, etc.) flows out of the mountain watersheds of Los Angeles County. In an effort to control this potentially disruptive force, the Department maintains a series of debris basins in canyon mouths and upstream stabilization structures in selected watersheds.

DEBRIS BASINS:

The purpose of a debris basin is to entrap the sediment flows emanating from the canyon and let the relatively desilted water pass into the downstream flood control channels.

The Department maintained 115 debris basins during the reporting period. The combined total maximum capacity of the basins is approximately 7,780,900 cubic yards. Design data on these facilities are in a table and their locations are shown on Location Map (in Appendix F).

Data for sediment inflow at individual debris basins and Unpublished information may be obtained by contacting:

Los Angeles County Department of Public Works
Water Resources Division
P.O. Box 1460
Alhambra, CA 91802-1460
...or telephone: (626) 458-6120

STABILIZATION STRUCTURES:

The Department has constructed stabilization structures to control erosion in natural canyons. These structures serve to prevent down cutting by stabilizing alluvium deposits. In addition, they store debris generated by the watershed and serve to stabilize side banks, reducing side slope sloughing and bank erosion.

The Department maintained 217 stabilization structures in 47 major watersheds during the reporting period. The Department has not constructed any stabilization structures since the 1973-74 water year.

EMERGENCY STRUCTURES:

The Department has constructed emergency structures (rail and timber) to entrap the debris from burned watersheds. The structures serve to protect improvements (road, channel, residence, etc.) located downstream of the watersheds.

During the reporting period, 32 emergency structures existed with a total maximum capacity of 253,000 cubic yards. Maps of areas burned during the reporting period can be obtained by contacting the *custodian* of hydrologic records.

E R O S I O N C O N T R O L

LOCATION MAP

See Appendix F

E R O S I O N C O N T R O L

DEBRIS BASIN - DESIGN DATA:

Including 2000-2001 Storm Season
(Sedimentation Management Unit)

Debris Basin	First Debris Season	Un-controlled Drainage Area Above Basin (Sq. Mi.)	Bottom Elev. at Max Cap. (ft)	Elevation Port Invert (ft)	Elevation Spillway Crest (ft)	Width Spillway	Elevation Crest of Dam	Maximum Debris Capacity (Cu. Yds)
Aliso	1970-71	2.77	1108	1108.40	1120	70.0	1134.0	42000 (8)
Arbor Dell	1971-72	.11	899	898.40	913	22.90	919.60	16300
Auburn	1954-55	.19	1260	1260.50	1278	30.0	1286.0	39000
Bailey	1945-46	.60	1123	1123.10	1155	30.0	1166.0	129000
Beatty	1970-71	.27	800	800.0	807	32.0	815.50	43000
Bigbriar	1971-72	.02	1898	1896.0	1910	14.0	1910.80	2600
Big Dalton	1959-60	2.94	1102	1101.90 (3)	1132	116.0	1148.70	518000
Blanchard	1968-69	.47	2026	2026.0	2054	40.0	2065.0	75000
Blue Gum	1968-69	.19	2020	2020.0	2042	25.0	2053.0	40000
Brace	1971-72	.29	1190	1189.70	1196	20.0	1205.0	30000
Bracemar	1971-72	.01	1140	1140.0	1146	8.0	1148.0	700 (14)
Bradbury	1954-55	.68	912	913.10	920	58.0	928.0	90000
Brand	1935-36	1.04	860	860.0	890	60.0	903.0	166000
Buena Vista	1985-86	.10	979	978.70	992	39.0	997.70	22000
Carriage House	1970-71	.03	1350	1350.0	1363	15.0	1366.80	6100
Carter	1954-55	.12	1224	1223.20	1248	30.0	1245.0	15000
Cassara	1976-77	.21	1272	1271.50	1292	66.0	1295.40	37000
Chamberlain	1974-75	.04	1085	1084.0	1098	20.0	1101.30	4700
Chandler	1995-96	.16	1055	1052.0	1073	36.0	1078.30	20000 (15)
Childs	1963-64	.30	1022	1022.0	1059	23.0	1071.0	50000
Cloud Creek	1972-73	.01	2350	2350.50	2360	(5)	2362.0	5100
Cloudcroft	1973-74	.21	314	315.0	330	36.0	329.50	35000
Cooks	1951-52	.58	2058	2058.0	2083	48.0	2092.0	52000
Cooks M-1A	1975-76	(13)	2120	(10)	2142	(10)	(10)	34000
Crescent Glen	2001-02	.07	1149		1171	19.30	1174.0	20000
Crestview	1983-84	.03	864	864.0	886	20.0	891.70	5900 (14)

FOOTNOTES

(1) Lowest clear water outlet, not spillway.
(2) Elevation of spillway notch.
(3) Flow line of sluiceway.
(4) Elevation of spillway into outlet channel. Elevation of overflow spillway 1,036.9 feet.
(5) One 30-inch reinforced concrete pipe.
(6) Four 36-inch corrugated metal pipes.
(7) One 36-inch reinforced concrete pipe. (Elevated inlet)
(8) Debris capacity available within right of way limits.
(9) Pit-type basin.
(10) Information unavailable.
(11) Special cleanout required due to limited storage.
(12) Cleanout required when debris reaches or exceeds elevation 1128.9 feet against face of dam.
(13) Values are combined with Cooks debris basin.
(14) Spillway level storage capacity.
(15) Data taken from design drawings.
(16) 7 feet in diameter circular outlet type.
(17) The maximum capacities have been rounded off with regard to appropriate precision consistent with the assumptions used in the development of Hydrology and Sedimentation Manual.

E R O S I O N C O N T R O L

DEBRIS BASIN - DESIGN DATA:

Including 2000-2001 Storm Season
(Sedimentation Management Unit)

Debris Basin	First Debris Season	Un-controlled Drainage Area Above Basin (Sq. Mi.)	Bottom Elev. at Max Cap. (ft)	Elevation Port Invert (ft)	Elevation Spillway Crest (ft)	Width Spillway	Elevation Crest of Dam	Maximum Debris Capacity (Cu. Yds)
Crocker	1983-84	.67	1064	1064.20	1070	36.0	1077.0	19000 (14)
Deer	1954-55	.59	1185	1185.0	1201	56.0	1209.60	57000
Denivelle	1976-77	.18	1471	1471.0	1479	46.0	1483.30	7900
Devonwood	1981-82	.05	1899	1899.0	1922	(16)	1927.50	11000
Dry Canyon-South Fork	1978-79	.49	1063	1062.50	1075	32.0	1079.30	7900
Dunsmuir	1935-36	.84	2228	2227.70	2257	60.0	2272.20	103000
Eagle	1936-37	.48	1850	1845.50	1880	60.0	1895.20	63000
Elmwood	1964-65	.31	912	911.50	938	22.0	952.0	61000
Emerald-East	1964-65	.15	1185	1181.10	1192	30.0	1204.0	13600
Englewild	1961-62	.44	1275	1275.0	1297	50.0	1300.0	41000
Fair Oaks	1935-36	.20	1544	1544.0	1562	(6)	1566.50	24000
Fern	1935-36	.31	1440	1440.0	1476	25.0	1482.0	43000
Fieldbrook	1974-75	.35	713	713.0	718	28.0	722.30	2800
Golf Club Drive	1970-71	.99	881	880.70	902	36.70	915.0	15000
Gooseberry	1998-99	.19	1440	1440.0	1460	25.0	1469.30	35000
Gordon	1973-74	.18	1076	1075.0	1096	22.0	1104.50	35600
Gould	1947-48	.36	1530	1528.20	1548	55.0	1558.30	53000
Gould (Upper)	1976-77	.18	1864	1863.90	1898	32.0	1901.0	52000
Halls	1935-36	.83	1642	1641.80	1662	131.0	1664.0	94000
Harrow	1958-59	.43	1255	1255.0	1269	40.0	1277.80	68000
Haven Way	1991-92	.13	1323	1323.0	1329	20.0	1335.60	38200
Hay	1936-37	.20	1890	1890.20	1908	36.0	1915.0	37000
Hillcrest	1962-63	.35	864	863.50	885	18.0	901.0	58000
Hog	1969-70	.32	1520	1520.0	1535	32.0	1547.0	43000
Hook East	1968-69	.18	1198	1198.0	1211	37.0	1215.0	22000
Hook West	1970-71	.17	1145	1145.0	1159	40.0	1167.0	22000

FOOTNOTES

(1) Lowest clear water outlet, not spillway.
(2) Elevation of spillway notch.
(3) Flow line of sluiceway.
(4) Elevation of spillway into outlet channel. Elevation of overflow spillway 1,036.9 feet.
(5) One 30-inch reinforced concrete pipe.
(6) Four 36-inch corrugated metal pipes.
(7) One 36-inch reinforced concrete pipe. (Elevated inlet)
(8) Debris capacity available within right of way limits.
(9) Pit-type basin.
(10) Information unavailable.
(11) Special cleanout required due to limited storage.
(12) Cleanout required when debris reaches or exceeds elevation 1128.9 feet against face of dam.
(13) Values are combined with Cooks debris basin.
(14) Spillway level storage capacity.
(15) Data taken from design drawings.
(16) 7 feet in diameter circular outlet type.
(17) The maximum capacities have been rounded off with regard to appropriate precision consistent with the assumptions used in the development of Hydrology and Sedimentation Manual.

E R O S I O N C O N T R O L

DEBRIS BASIN - DESIGN DATA:

Including 2000-2001 Storm Season
(Sedimentation Management Unit)

Debris Basin	First Debris Season	Un-controlled Drainage Area Above Basin (Sq. Mi.)	Bottom Elev. at Max Cap. (ft)	Elevation Port Invert (ft)	Elevation Spillway Crest (ft)	Width Spillway	Elevation Crest of Dam	Maximum Debris Capacity (Cu. Yds)
Inverness	1982-83	.03	1253	1252.90	1257	20.0	1261.0	3300
Irving Drive	1974-75	.03	906	905.0	915	12.0	920.0	1200
Kinneloa	1964-65	.20	1370	1370.0	1403	76.0	1407.90	36000
Kinneloa - West	1966-67	.19	1385	1385.0	1413	22.0	1421.0	35000
Lannan	1954-55	.25	1017	1015.0	1036	14.0	1043.0	41000
La Tuna	1955-56	5.34	1109	1110.0	1140	75.0	1157.0	495000
Las Flores	1935-36	.45	1685	(9)	1716	50.0	1726.40	56000
Las Lomas	1983-84	.07	887	887.0	906	77.0	908.50	17000
Limekiln	1963-64	3.72	992	992.0	1003	77.0	1019.0	172000
Lincoln	1935-36	.50	1276	1276.0	1304	56.0	1322.50	38000
Linda Vista	1970-71	.37	980	979.50	990	40.0	995.70	3200
Little Dalton	1959-60	3.31	1140	1139.50	1186	84.0	1200.20	661000
Maddock	1954-55	.26	889	891.80	901	36.0	904.0	45000
Marston/Paragon	1988-89	.20	1456	1455.60	1460	20.0	1466.0	6100
May No. 1	1953-54	.70	1666	1666.0	1684	60.0	1692.50	64000
May No. 2	1953-54	.09	1663	1663.50 (2)	1670	20.0	1674.0	13000
Monument	1981-82	.11	944	942.30	950	12.0	954.0	7000
Morgan	1964-65	.60	1138	1137.90	1162	45.0	1171.50	78500
Mountbatten	1983-84	.01	1136	1135.50	1141	20.0	1141.0	1400
Mull	1973-74	.15	1147	1147.0	1154	20.0	1165.0	13000
Mullally (11)	1974-75	.34	2420	2420.0	2435	42.0	2439.60	9400
Nichols	1937-38	.94	480	481.0	485	50.0	495.0	14000
Oak	1975-76	.05	2144	2145.70	2153	50.0	2156.20	13000
Oakglade	1974-75	.06	1275	1280.0	1290	20.0	1296.0	7300
Oakmont View Drive	1984-85	.02	1316	1315.50	1328	20.0	1328.50	3400
Oak Park	2001-02	.07	1042		1060	18.70	1064.0	15000

FOOTNOTES

(1) Lowest clear water outlet, not spillway.
(2) Elevation of spillway notch.
(3) Flow line of sluiceway.
(4) Elevation of spillway into outlet channel. Elevation of overflow spillway 1,036.9 feet.
(5) One 30-inch reinforced concrete pipe.
(6) Four 36-inch corrugated metal pipes.
(7) One 36-inch reinforced concrete pipe. (Elevated inlet)
(8) Debris capacity available within right of way limits.
(9) Pit-type basin.
(10) Information unavailable.
(11) Special cleanout required due to limited storage.
(12) Cleanout required when debris reaches or exceeds elevation 1128.9 feet against face of dam.
(13) Values are combined with Cooks debris basin.
(14) Spillway level storage capacity.
(15) Data taken from design drawings.
(16) 7 feet in diameter circular outlet type.
(17) The maximum capacities have been rounded off with regard to appropriate precision consistent with the assumptions used in the development of Hydrology and Sedimentation Manual.

E R O S I O N C O N T R O L

DEBRIS BASIN - DESIGN DATA:

Including 2000-2001 Storm Season
(Sedimentation Management Unit)

Debris Basin	First Debris Season	Un-controlled Drainage Area Above Basin (Sq. Mi.)	Bottom Elev. at Max Cap. (ft)	Elevation Port Invert (ft)	Elevation Spillway Crest (ft)	Width Spillway	Elevation Crest of Dam	Maximum Debris Capacity (Cu. Yds)
Oliver	1989-90	.18	1258	1258.0	1278	41.0	1283.30	32000
Pickens	1935-36	1.50	1564	1564.0	1600	123.0	1613.0	125000
Pinelawn	1973-74	.02	2431	2430.50	2443	(7)	2448.50	3200
Rowley	1953-54	.21	1704	1703.60	1714	60.0	1722.0	43000
Rowley (Upper)	1976-77	.31	1926	1926.0	1946	42.0	1951.30	29000
Rubio	1943-44	1.26	1582	1582.0	1611	66.80	1625.50	150000
Ruby (Lower)	1955-56	.28	811	809.60	828	45.0	833.0	29000
Rye	1981-82	1.11	1074	1073.80	1078	58.20	1081.50	19000
Saddleback	1988-89	.04	1781	1779.30	1791	23.50	1796.80	16000
Santa Anita	1959-60	1.70	748	748.50 (3)	775	160.0	796.0	395000
Sawpit	1954-55	2.84	930	930.30	982	110.0	1000.0	636000
Scholl	1945-46	.66	950	950.0 (2)	956	76.0	966.0	9300
Schoolhouse	1962-63	.28	1460	1460.0	1478	20.0	1491.0	68000
Schwartz	1976-77	.25	1295	1294.70	1313	35.0	1319.0	45000
Shields	1937-38	.06	2050	2050.0	2058	30.0	2070.20	20000
Sierra Madre Dam (12)	1927-28	2.39	1120	1119.50	1172	62.50	1175.0	136000
Sierra Madre Villa	1957-58	1.46	1069	1069.20	1089	48.0	1102.50	402000
Snover	1936-37	.21	1863	1862.70	1879	40.0	1893.70	25000
Sombrero	1969-70	1.06	1540	1540.0	1565	45.0	1580.0	88000
Spinks	1958-59	.44	750	750.0	762	40.0	765.90	56000
Starfall	1973-74	.13	2428	2428.0	2442	30.0	2446.50	15000
Stetson	1969-70	.29	1556	1555.0	1570	32.0	1579.0	41000
Stough	1940-41	1.65	1006	1005.80	1032 (4)	100.0	1043.50	181000
Sturtevant	1967-68	.03	975	971.0	984	8.0	990.0	1400
Sullivan	1970-71	2.38	570	570.0	587	50.0	599.30	51000
Sunnyside	1970-71	.02	1290	1290.0	1300	15.0	1303.80	3400

FOOTNOTES

(1) Lowest clear water outlet, not spillway.
(2) Elevation of spillway notch.
(3) Flow line of sluiceway.
(4) Elevation of spillway into outlet channel. Elevation of overflow spillway 1,036.9 feet.
(5) One 30-inch reinforced concrete pipe.
(6) Four 36-inch corrugated metal pipes.
(7) One 36-inch reinforced concrete pipe. (Elevated inlet)
(8) Debris capacity available within right of way limits.
(9) Pit-type basin.
(10) Information unavailable.
(11) Special cleanout required due to limited storage.
(12) Cleanout required when debris reaches or exceeds elevation 1128.9 feet against face of dam.
(13) Values are combined with Cooks debris basin.
(14) Spillway level storage capacity.
(15) Data taken from design drawings.
(16) 7 feet in diameter circular outlet type.
(17) The maximum capacities have been rounded off with regard to appropriate precision consistent with the assumptions used in the development of Hydrology and Sedimentation Manual.

E R O S I O N C O N T R O L

DEBRIS BASIN - DESIGN DATA:

Including 2000-2001 Storm Season
(Sedimentation Management Unit)

Debris Basin	First Debris Season	Un-controlled Drainage Area Above Basin (Sq. Mi.)	Bottom Elev. at Max Cap. (ft)	Elevation Port Invert (ft)	Elevation Spillway Crest (ft)	Width Spillway	Elevation Crest of Dam	Maximum Debris Capacity (Cu. Yds)
Sunset Canyon-Deer	1982-83	.21	1382	1380.50	1402	24.0	1409.10	5000
Sunset (Lower)	1963-64	.45	1004	994.50	1040	40.0	1056.0	159000
Sunset (Upper)	1928-29	.44	1574	1574.0	1604	75.0	1610.10	16000
Turnbull	1952-53	.99	476	475.60	492	40.0	503.0	22000
Upper Shields	1976-77	.22	2498	2498.0	2530	33.0	2537.20	40000
Verdugo	1935-36	9.40	1110	1110.0	1120	145.0	1131.0	131000
Ward	1956-57	.12	2022	2022.0	2043	58.0	2045.30	26000
West Ravine	1935-36	.25	1484	1469.60 (1)	1502	20.0	1505.50	39000
Westridge	1974-75	.02	894	894.0	901	10.70	906.0	1400 (14)
Wildwood	1967-68	.65	1343	1342.90	1354	50.0	1360.0	21000
William S. Hart Park	1983-84	.09	1282	1280.0	1290	19.0	1293.0	2400
Wilson	1962-63	2.58	1493	1493.0	1526	60.0	1543.0	313000
Winery	1968-69	.18	1920	1920.0	1935	20.0	1945.0	29000
Zachau	1956-57	.35	1803	1803.10	1820	44.0	1827.50	48000
116 DEBRIS BASINS		**62.77**						**7,846,300**

FOOTNOTES

(1) Lowest clear water outlet, not spillway.
(2) Elevation of spillway notch.
(3) Flow line of sluiceway.
(4) Elevation of spillway into outlet channel. Elevation of overflow spillway 1,036.9 feet.
(5) One 30-inch reinforced concrete pipe.
(6) Four 36-inch corrugated metal pipes.
(7) One 36-inch reinforced concrete pipe. (Elevated inlet)
(8) Debris capacity available within right of way limits.
(9) Pit-type basin.
(10) Information unavailable.
(11) Special cleanout required due to limited storage.
(12) Cleanout required when debris reaches or exceeds elevation 1128.9 feet against face of dam.
(13) Values are combined with Cooks debris basin.
(14) Spillway level storage capacity.
(15) Data taken from design drawings.
(16) 7 feet in diameter circular outlet type.
(17) The maximum capacities have been rounded off with regard to appropriate precision consistent with the assumptions used in the development of Hydrology and Sedimentation Manual.

WATER CONSERVATION

WATER CONSERVATION

Information presented in this section includes amounts of local, imported, and reclaimed water conserved in spreading areas and information on the seawater barrier projects which prevent salt water intrusion into groundwater zones in the coastal areas. Pertinent data is presented regarding the locations and descriptions of the Department's water conservation facilities, as well as facilities owned by others. Additional data not presented in this report or its appendices can be obtained by contacting the custodian of hydrologic records.

CONSERVING THE WATERS

In addition to the flood control program, the Department has the equally important mission of conserving as much of the storm and other waters as practicable. The use of water conservation facilities adjacent to river channels and in soft-bottom channels permits water to percolate into groundwater basins for later pumping. These water spreading facilities are located in areas where the underlying soils are composed of permeable formations and in hydraulic connection with the underlying aquifer.

The various types of water conserved, local, imported, and reclaimed are construed to have the following meanings in this section: Local water is primarily runoff due to rainfall on the mountain and valley watersheds, dam releases, and rising water within the County. Imported water is water originating outside the County either from Northern California or from the Colorado River. Reclaimed water is the effluent produced by the Whittier Narrows Water Reclamation Plant, the San Jose Creek Water Reclamation Plant, and the Pomona Water Reclamation Plant, all operated by the Los Angeles County Sanitation District.

The importance of this activity is apparent when it is realized that about 30 to 40 percent of the water used in the County is pumped from groundwater supplies. The growth of the County, combined with periodic droughts, has seriously depleted these supplies on numerous occasions.

The Department's policy is to conserve the maximum possible amount of storm water consistent with runoff quantity and quality, capacities of the spreading facilities, and groundwater conditions.

IMPORTED WATER

During the reporting period, the Department received water imported from the Colorado River and the State Water Project by the Metropolitan Water District (MWD) and spread it in the Coastal Plain at the Department's Rio Hondo and San Gabriel Coastal Spreading Grounds on behalf of the Water Replenishment District of Southern California. MDW water is also spread in the main basin, upper San Gabriel Canyon Basin, and Glendora Basin.

The Department spreads imported water from MWD and the San Gabriel Valley Municipal Water District (SGVMWD) in the San Gabriel Valley on behalf of the San Gabriel Valley Municipal Water District, Upper San Gabriel Valley Municipal Water District, and the Three Valleys Municipal Water District in the following facilities:

- San Gabriel Canyon Spreading Grounds
- Santa Fe Spreading Grounds
- San Gabriel River
- Little Dalton Spreading Grounds
- Forbes Spreading Grounds
- Irwindale Spreading Basin/Manning Pit
- Citrus
- Ben Lomond
- Valley Rubber Dam

WATER CONSERVATION

RECYCLED WATER

The County Sanitation District's Whittier Narrows Water Reclamation Plant effluent purchased by the Water Replenishment District of Southern California is transported to the Rio Hondo and San Gabriel Coastal Basin Spreading Grounds for groundwater replenishment.

The County Sanitation District's San Jose Creek Water Reclamation Plant made its first delivery of effluent in November 1972. The effluent released into San Jose Creek, San Gabriel River, or directly delivered to San Gabriel Coastal Spreading Ground via pipeline can be purchased by the Water Replenishment District of Southern California.

Water from the Pomona Reclamation Plant is released down the San Jose Creek - San Gabriel River System to the Department's recharge facilities in the Central Basin spreading grounds.

The maximum amount of reclaimed water allowed for spreading in the Montebello Forebay, effective July 1991, is 60,000 acre-feet per year but not to exceed 150,000 acre-feet over a three-year period.

SEAWATER BARRIER PROJECTS

The Department operates three barrier projects to protect the groundwater in the West Coast and Central Basins against seawater intrusion by creating freshwater pressure ridges along the coastline. The pressure ridges are created by injecting freshwater through a series of injection wells. The amounts of water injected by these wells during the reporting period are as follows:

Facility	Imported Water (Acre-Feet)	Recycled Water (Acre-Feet)
Alamitos Barrier Project:		
Los Angeles Portion	3,705	0
Orange County Portion*	1,925	0
Dominguez Gap Barrier Project	3,922	0
West Coast Basin Barrier Project	13,988	6,838

**Injected on behalf of the Orange County Water District*

WATER CONSERVATION

SEASONAL DATA AND MAPS

During the reporting period, weekly, monthly, and semi-annual measurements of groundwater levels in observation wells located throughout the groundwater basins in Los Angeles County were made and processed.

Locations of the key wells noted herein are shown on the well map in the Water Conservation summary section. Historical key well level data can be downloaded as ASCII file or from the pull down selection in the Water Conservation summary section.

Static groundwater elevation contour maps for the three major groundwater regions in Los Angeles County are available from the local basin water agencies:

Groundwater Basin	Contact
Upper Los Angeles River Area (San Fernando Valley)	Upper Los Angeles River Watermaster P.O. Box 111, Room 1455 Los Angeles, CA 90051 (213) 367-1020 (213) 367-1131 (FAX)
San Gabriel Valley	Main San Gabriel Basin Watermaster 729 North Azusa Avenue Azusa, CA 91702 (626) 815-1300 (626) 815-1303 (FAX)
Coastal Plain	Water Replenishment District of Southern California 12621 East 166th Street Cerritos, CA 90703 (562) 921-5521 (562) 921-6101 (FAX)

GROUNDWATER BASINS AND GROUNDWATER RECHARGE

Groundwater in Los Angeles County is stored in basins underlying five major geographic areas. These groundwater basins are separated by geologic features which impede groundwater movement or by political boundaries. A map of these groundwater basins and the Department's spreading grounds is available upon request from the Department. General spreading grounds facility information is included in the summary section. Monthly water conservation data for the reporting period at the Department's facilities and other pertinent facilities are included in the Water Conservation Summary section of this report. The monthly imported and recycled water deliveries for the reporting period are also included in the Water Conservation summary section. The following is a background summary of the Department's groundwater recharge activities within each of these major areas:

WATER CONSERVATION

COUNTY-WIDE

The Department operates 2,436 acres of spreading grounds and soft-bottom channel spreading areas for replenishment of local groundwater supplies. The Department also assisted in the operation and maintenance of 269 acres of spreading grounds owned by others. An additional 656 acres of spreading grounds are controlled maintained and operated by other agencies. The total gross acreage of spreading grounds in Los Angeles County is 3,361 acres.

Groundwater replenishment consists of storm runoff, imported water, and recycled water. County-wide, the Department spread the following amounts during the reporting period:

County Rainfall Index (% of Normal)	97
Storm Runoff (acre-feet)	144,599
Imported Water (acre-feet)	58,448
Recycled Water (acre-feet)	46,343

The Department is continuing its efforts to improve its water spreading facilities in order to maximize the amounts of water conserved and to simplify the spreading operations.

SAN GABRIEL VALLEY

The Department operates 20 spreading facilities in the San Gabriel Valley that receive direct valley runoff and flows from the San Gabriel Mountains. Some of these facilities can also receive imported water. Valley-wide, the Department spread the following amounts during the reporting period:

Storm Runoff (acre-feet)	89,041
Imported Water (acre-feet)	33,256
Diversions to Grounds Owned by Others (acre-feet)	6,940

The Department's spreading grounds replenished the Valley's several groundwater basins as follows:

	Storm Water (acre-feet)	Imported Water (acre-feet)	Key Wells
Main San Gabriel Basin	46,890	28,827	3030F, 2965C
Upper San Gabriel Canyon Basin	18,581	4,036	4284A
Lower San Gabriel Canyon Basin	473	0	4285
Wayhill Basin	234	0	
Foothill Basin	820	0	
Glendora Basin	250	0	
Claremont Heights Basin	589	2,134	4508A, 4508B
Live Oak Basin	0	0	
Chino Basin	0	0	
San Dimas Basin	74	0	
Pomona Basin	0	0	3251E, 3261P, 4469A
Puente and Spadra Basins	0	0	
Raymond Basin	2,320	0	4057H

WATER CONSERVATION

COASTAL PLAIN

The groundwater basins underlying the Coastal Plain are divided by geological features into the Central (includes the Montebello and Los Angeles Forebays), West Coast, Santa Monica, and Hollywood Basins. Most of the water is spread in the Montebello Forebay. The Department spread the following amounts in the Coastal Plain during the reporting period:

Storm Runoff (acre-feet)	39,361
Imported Water (acre-feet)	23,451
Recycled Water (acre-feet)	46,343

Central Basin

The Central Basin has the most storage capacity of the basins in the Coastal Plain. In addition to the water recharged in the Department's spreading facilities, water injected in the Alamitos Barrier Project also contributes to the replenishment of the pressure aquifers underlying the Central Basin. The basin contains Key Well Nos.460K, 1601T, and 906D.

West Coast Basin

The West Coast basin is the second largest basin underlying the Coastal Plain and is separated by the Newport-Inglewood Fault zone. Groundwater is primarily recharged by Central Basin subsurface flows and by water injected by the Department in the West Coast Basin and Dominguez Gap Barrier Projects. Groundwater elevations in the West Coast basin are below sea level except in the area of the West Coast Basin Barrier injection mound. The basin contains Key Well Nos. 1346D and 760C.

Santa Monica and Hollywood Basins

The Department has no spreading facilities in either of these basins.

SAN FERNANDO VALLEY

The San Fernando Valley is also known as the Upper Los Angeles River Area (ULARA). Most of the runoff from the surrounding mountains flows to the Valley. The Valley comprises of four basins:

San Fernando Main Basin

The basin is the largest basin underlying the San Fernando Valley. The basin contains Key Well Nos. 3872H and 4709. The Department spread the following during the reporting period:

Storm Runoff (acre-feet)	17,939
Imported Water (acre-feet)	0
Recycled Water (acre-feet)	0

Sylmar, Verdugo, and Eagle Rock Basins

The Department has no spreading facilities in these much smaller basins.

WATER CONSERVATION

SANTA CLARITA VALLEY

The Department has no spreading facilities in the area. Much of the Valley is open space, permitting substantial natural percolation.

The Upper Santa Clarita subunit comprises five basins.

ANTELOPE VALLEY

There are several groundwater subbasins underlying the Antelope Valley. Five of them are located within Los Angeles County.

The Department operates no spreading facilities in the Antelope Valley.

Key Well Nos. 9974 and 8825 are located in the Lancaster and Little Rock subbasins, respectively.

WATER CONSERVATION

SUMMARY

SPREADING FACILITIES OWNED AND OPERATED BY THE DEPARTMENT

See Appendix G

SPREADING FACILITIES NOT OWNED BY THE DEPARTMENT

See Appendix H

TOTAL MONTHLY WATER CONSERVED

See Appendix I

IMPORTED WATER OUTLET RELEASES

See Appendix J

RECLAIMED WATER

See Appendix K

GROUND WATER FLUCTUATION

See Appendix L

Location	Appendix L
Coastal Plain, City of Long Beach	Appendix L 01
Coastal Plain	Appendix L 02
Coastal Plain, City of Long Beach	Appendix L 03
Central Basin	Appendix L 04
Main San Gabriel Basin	Appendix L 05
Main San Gabriel Basin, Baldwin Park	Appendix L 06
Pomona Basin	Appendix L 07
San Fernando Valley, Canoga Park	Appendix L 08
San Fernando Valley, Burbank	Appendix L 09
Raymond Basin	Appendix L 10
San Gabriel Canyon Basin, North of Azusa	Appendix L 11
Upper Claremont Heights	Appendix L 12
Santa Clarita Valley, Near Castaic Junction	Appendix L 13
Little Rock, South of Palmdale	Appendix L 14
Antelope Valley, South of Lancaster	Appendix L 15

WATER CONSERVATION

KEYWELL MAP

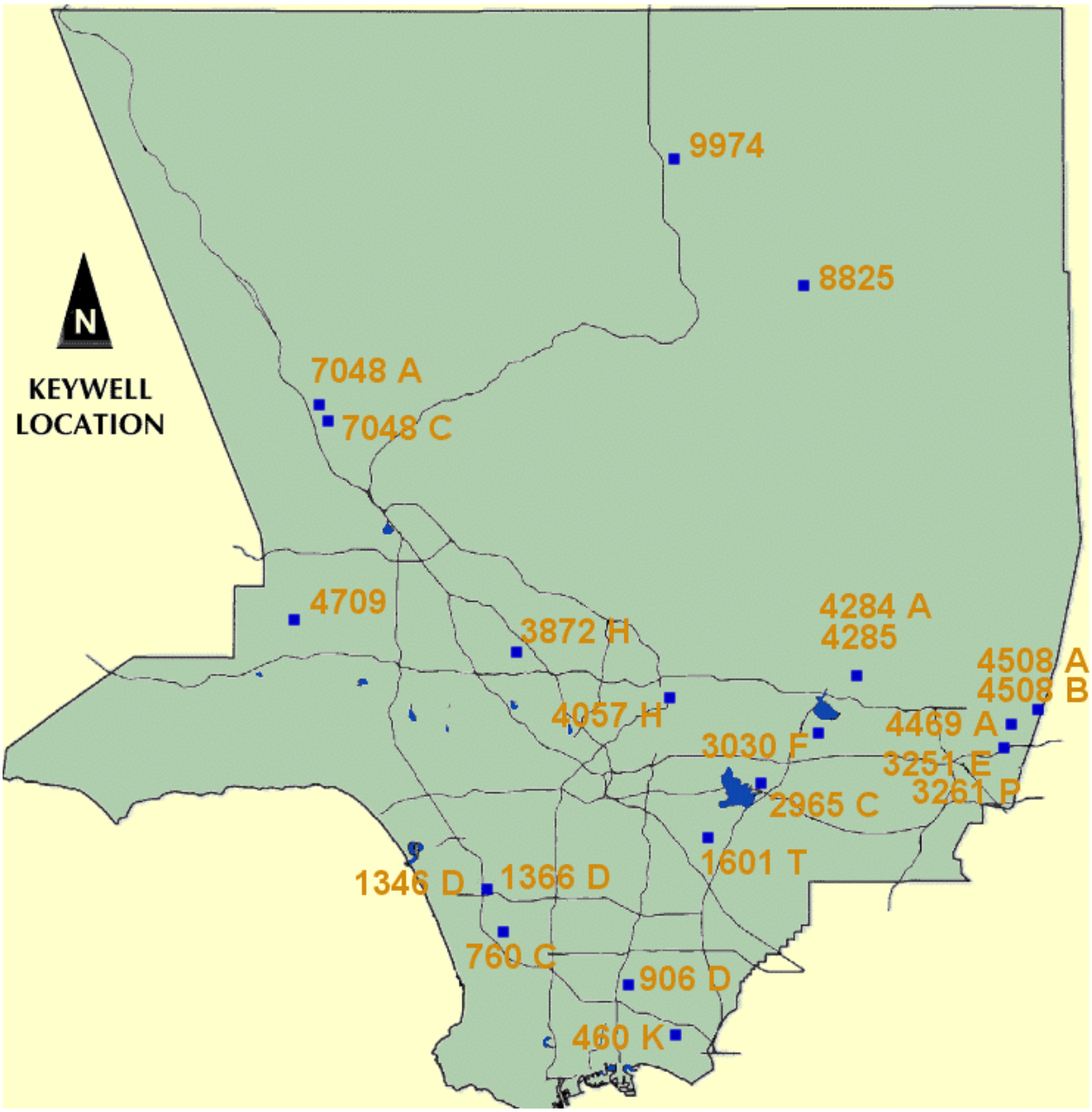

APPENDIX A

HYDROLOGIC REPORT 2000 – 2001

PRECIPITATION – DAILY PRECIPITATION SUMMARY

P R E C I P I T A T I O N

DAILY PRECIPITATION SUMMARY

Gage Type: *Standard 8 inch diameter (DPW)*

5B Calabasas

Water Year from 10/1/2000 to 9/30/2001

Latitude: 34-09-24 Longitude: 118-38-14 Elevation: 924 Feet Observation Time: 1700

Day	Oct	Nov	Dec	Jan	Feb	Mar	Apr	May	Jun	Jul	Aug	Sep
1												
2												
3												
4						0.32						
5						1.68						
6						2.18						
7							0.66					
8				0.20								
9				0.01			0.20					
10				0.56	0.40							
11				4.58	0.04							
12				0.76	1.36							
13					2.77							
14					0.19							
15												
16												
17												
18												
19					0.04							
20												
21							0.50					
22												
23												
24				0.32	0.25							
25					1.10							
26				0.59	1.90							
27	0.95			0.16	0.17							
28					0.22							
29	0.25											
30												
31												
Totals	**1.20**	**0.00**	**0.00**	**7.18**	**8.44**	**4.18**	**1.36**	**0.00**	**0.00**	**0.00**	**0.00**	**0.00**

Water Year Total: **22.36**

NOTE: All values are in terms of inches, unless otherwise specified.

LEGEND:
- * - Unprocessed record
- E - Estimated
- I - Incomplete data
- M - Instrument malfunction
- N - No data available
- Q - Questionable
- T - Trace, unmeasurable amount of rain
-) - Include in the following total

P R E C I P I T A T I O N

DAILY PRECIPITATION SUMMARY

Gage Type: *Automatic recording gage (DPW)*

6 Topanga Patrol Station

Water Year from 10/1/1999 to 9/30/2000

Latitude: 34-05-03 Longitude: 118-35-57 Elevation: 745 Feet Observation Time: 2400

Day	Oct	Nov	Dec	Jan	Feb	Mar	Apr	May	Jun	Jul	Aug	Sep
1						0.04						
2												
3												
4						0.68						
5						1.80						
6						1.04	0.24					
7					0.04		1.08					
8				0.20								
9												
10				5.64	1.00							
11	0.04			0.92	1.76							
12				0.88	1.68							
13												
14												
15												
16												
17												
18					0.04							
19					1.08							
20												
21												
22												
23					0.12							
24				0.52	0.68							
25					2.04							
26	2.16			0.92	0.88							
27	1.04				0.24							
28					0.28							
29	0.76											
30												
31												
Totals	**4.00**	**0.00**	**0.00**	**9.08**	**9.84**	**3.56**	**1.32**	**0.00**	**0.00**	**0.00**	**0.00**	**0.00**

Water Year Total: **27.80**

NOTE: All values are in terms of inches, unless otherwise specified.

LEGEND:
- * - Unprocessed record
- E - Estimated
- I - Incomplete data
- M - Instrument malfunction
- N - No data available
- Q - Questionable
- T - Trace, unmeasurable amount of rain
-) - Include in the following total

P R E C I P I T A T I O N

DAILY PRECIPITATION SUMMARY

Gage Type: *Automatic recording gage (DPW)*

10A Bel Air Hotel

Water Year from 10/1/2000 to 9/30/2001

Latitude: 34-05-11 Longitude: 118-26-45 Elevation: 540 Feet Observation Time: 2400

Day	Oct	Nov	Dec	Jan	Feb	Mar	Apr	May	Jun	Jul	Aug	Sep
1												
2						0.04						
3												
4												
5												
6												
7					0.04		1.16					
8				0.16			0.08					
9												
10				4.17	0.76							
11	0.20			1.38	0.04							
12				1.14	0.84							
13					1.32							
14					0.60						0.04	
15					0.36							
16					0.04	0.04						
17					0.04							
18												
19					0.04							
20					0.08		0.36					
21					0.04		0.44					
22					0.04							
23												
24				0.40								
25					0.04							
26	0.24			0.59	0.04							
27	0.74											
28												
29	0.63											
30												
31												
Totals	**1.81**	**0.00**	**0.00**	**7.84**	**4.32**	**0.08**	**2.04**	**0.00**	**0.00**	**0.00**	**0.04**	**0.00**

Water Year Total: **16.13**

NOTE: All values are in terms of inches, unless otherwise specified.

LEGEND:
- * - Unprocessed record
- E - Estimated
- I - Incomplete data
- M - Instrument malfunction
- N - No data available
- Q - Questionable
- T - Trace, unmeasurable amount of rain
-) - Include in the following total

P R E C I P I T A T I O N

DAILY PRECIPITATION SUMMARY

Gage Type: *Standard 8 inch diameter*

11D Upper Franklin Canyon Reservoir

Water Year from 10/1/2000 to 9/30/2001

Latitude: 34-07-10 Longitude: 118-24-35 Elevation: 867 Feet Observation Time: 0700

Day	Oct	Nov	Dec	Jan	Feb	Mar	Apr	May	Jun	Jul	Aug	Sep
1						0.21						
2												
3												
4												
5						0.54						
6						1.81			0.01			
7						0.03	1.40					
8					0.01							
9				0.21		0.05						
10					0.79							
11				4.60	0.04							
12				0.90	3.00							
13	0.01			0.26	2.40							
14					0.78							
15												
16												
17												
18					0.08							
19												
20					0.61							
21							0.72					
22												
23												
24				0.39	0.10							
25				0.16	0.58							
26				0.27	2.83							
27	0.08			0.44	0.12							
28	0.76				0.25							
29												
30												
31	0.73											
Totals	**1.58**	**0.00**	**0.00**	**7.23**	**11.59**	**2.64**	**2.12**	**0.00**	**0.01**	**0.00**	**0.00**	**0.00**

Water Year Total: **25.17**

NOTE: All values are in terms of inches, unless otherwise specified.

LEGEND:
- * - Unprocessed record
- E - Estimated
- I - Incomplete data
- M - Instrument malfunction
- N - No data available
- Q - Questionable
- T - Trace, unmeasurable amount of rain
-) - Include in the following total

P R E C I P I T A T I O N

DAILY PRECIPITATION SUMMARY

Gage Type: *Standard 8 inch diameter (DPW)*

13C North Hollywood-Lakeside

Water Year from 10/1/2000 to 9/30/2001

Latitude: 34-08-46 Longitude: 118-21-13 Elevation: 550 Feet Observation Time: 0630

Day	Oct	Nov	Dec	Jan	Feb	Mar	Apr	May	Jun	Jul	Aug	Sep
1						0.12						
2												
3												
4												
5						0.40						
6						1.50						
7							1.10					
8							0.47					
9			0.20	0.20								
10					0.38							
11				4.70	0.43							
12				0.92	2.00							
13				0.10	3.00							
14					0.80							
15												
16												
17												
18												
19												
20					0.42							
21							0.60					
22												
23												
24				0.11	0.10							
25				0.39	0.55							
26					2.20							
27	0.58			0.42	0.05							
28					0.30							
29												
30	0.82											
31												
Totals	**1.40**	**0.00**	**0.20**	**6.84**	**10.23**	**2.02**	**2.17**	**0.00**	**0.00**	**0.00**	**0.00**	**0.00**

Water Year Total: **22.86**

NOTE: All values are in terms of inches, unless otherwise specified.

LEGEND:
- * - Unprocessed record
- E - Estimated
- I - Incomplete data
- M - Instrument malfunction
- N - No data available
- Q - Questionable
- T - Trace, unmeasurable amount of rain
-) - Include in the following total

P R E C I P I T A T I O N

DAILY PRECIPITATION SUMMARY

Gage Type: *Automatic recording gage (DPW)*

17 Sepulveda Canyon At Mulholland

Water Year from 10/1/2000 to 9/30/2001

Latitude: 34-07-51 Longitude: 118-29-26 Elevation: 1425 Feet Observation Time: 2400

Day	Oct	Nov	Dec	Jan	Feb	Mar	Apr	May	Jun	Jul	Aug	Sep
1												
2												
3												
4						0.64						
5						1.56						
6						0.84						
7							0.92					
8				0.16								
9												
10				4.92	0.80							
11				1.38	1.40							
12				0.71	3.52							
13					1.48							
14												
15												
16												
17												
18					0.08							
19					0.72							
20					0.08		0.64					
21							0.04					
22												
23					0.04							
24				0.47	0.68							
25					2.48							
26	0.55			0.08	0.64							
27	1.89				0.24							
28					0.20							
29	0.59											
30												
31												
Totals	**3.03**	**0.00**	**0.00**	**7.72**	**12.36**	**3.04**	**1.60**	**0.00**	**0.00**	**0.00**	**0.00**	**0.00**

Water Year Total: **27.75**

NOTE: All values are in terms of inches, unless otherwise specified.

LEGEND:
- * - Unprocessed record
- E - Estimated
- I - Incomplete data
- M - Instrument malfunction
- N - No data available
- Q - Questionable
- T - Trace, unmeasurable amount of rain
-) - Include in the following total

P R E C I P I T A T I O N

DAILY PRECIPITATION SUMMARY

Gage Type: *Standard 8 inch diameter (DPW)*

20B Girard Reservoir

Water Year from 10/1/2000 to 9/30/2001

Latitude: 34-09-07 Longitude: 118-36-36 Elevation: 986 Feet Observation Time: 0800

Day	Oct	Nov	Dec	Jan	Feb	Mar	Apr	May	Jun	Jul	Aug	Sep
1						0.50						
2												
3							0.07					
4												
5						0.98						
6				0.05		2.70						
7						0.06	0.70					
8			0.03				0.04					
9				0.20								
10				0.01	0.30	0.03	0.06					
11				5.75	0.07							
12	0.01			0.88	1.65							
13				0.03	2.50							
14					0.24							
15												
16												
17												
18												
19					0.42							
20					0.04							
21							0.67					
22							0.02					
23					0.06							
24				0.33	0.22							
25				0.03	0.70							
26				0.32	2.16							
27	0.03			0.50	0.12							
28	1.44			0.01	0.30							
29	0.01			0.01								
30												
31	0.45											
Totals	**1.94**	**0.00**	**0.03**	**8.12**	**8.78**	**4.27**	**1.56**	**0.00**	**0.00**	**0.00**	**0.00**	**0.00**

Water Year Total: **24.70**

NOTE: All values are in terms of inches, unless otherwise specified.

LEGEND:
- * - Unprocessed record
- E - Estimated
- I - Incomplete data
- M - Instrument malfunction
- N - No data available
- Q - Questionable
- T - Trace, unmeasurable amount of rain
-) - Include in the following total

P R E C I P I T A T I O N

DAILY PRECIPITATION SUMMARY

Gage Type: *Standard 8 inch diameter (DPW)*

21B Woodland Hills

Water Year from 10/1/2000 to 9/30/2001

Latitude: 34-10-14 Longitude: 118-35-33 Elevation: 875 Feet Observation Time: 1700

Day	Oct	Nov	Dec	Jan	Feb	Mar	Apr	May	Jun	Jul	Aug	Sep
1												
2												
3												
4						0.16						
5						0.60						
6						1.40						
7					0.01		0.54					
8				0.18								
9							0.17					
10				0.54	0.30							
11	0.02			3.99	0.35							
12				0.55	1.25							
13					2.67							
14					0.13							
15												
16												
17												
18					0.03							
19					0.18							
20												
21							0.45					
22												
23					0.06							
24				0.36	0.20							
25					1.59							
26				0.75								
27	1.35				0.13							
28					0.23							
29	0.20											
30	0.21											
31												
Totals	**1.78**	**0.00**	**0.00**	**6.37**	**7.13**	**2.16**	**1.16**	**0.00**	**0.00**	**0.00**	**0.00**	**0.00**

Water Year Total: **18.60**

NOTE: All values are in terms of inches, unless otherwise specified.

LEGEND:
- * - Unprocessed record
- E - Estimated
- I - Incomplete data
- M - Instrument malfunction
- N - No data available
- Q - Questionable
- T - Trace, unmeasurable amount of rain
-) - Include in the following total

P R E C I P I T A T I O N

DAILY PRECIPITATION SUMMARY

Gage Type: *Standard 8 inch diameter*

23B Chatsworth Reservoir

Water Year from 10/1/2000 to 9/30/2001

Latitude: 34-13-44 Longitude: 118-37-18 Elevation: 900 Feet Observation Time: 0700

Day	Oct	Nov	Dec	Jan	Feb	Mar	Apr	May	Jun	Jul	Aug	Sep
1						0.07						
2												
3												
4												
5						0.62						
6				0.01		1.68						
7					0.03	0.01	0.48					
8							0.04					
9			0.02	0.17								
10					0.58	0.01	0.01					
11				3.72	0.11							
12	0.06			0.71	0.91							
13				0.39	1.89							
14					0.54							
15												
16												
17												
18												
19					0.08							
20					0.16							
21							0.52					
22												
23					0.02							
24				0.31	0.06							
25				0.07	0.82							
26				0.40	2.32							
27	0.04			0.18	0.04							
28	0.45				0.29							
29												
30												
31	0.54											
Totals	**1.09**	**0.00**	**0.02**	**5.96**	**7.85**	**2.39**	**1.05**	**0.00**	**0.00**	**0.00**	**0.00**	**0.00**

Water Year Total: **18.36**

NOTE: All values are in terms of inches, unless otherwise specified.

LEGEND:
- * - Unprocessed record
- E - Estimated
- I - Incomplete data
- M - Instrument malfunction
- N - No data available
- Q - Questionable
- T - Trace, unmeasurable amount of rain
-) - Include in the following total

P R E C I P I T A T I O N

DAILY PRECIPITATION SUMMARY

Gage Type: *Standard 8 inch diameter*

25C Northridge-L.A.D.W.P.

Water Year from 10/1/2000 to 9/30/2001

Latitude: 34-13-52 Longitude: 118-32-28 Elevation: 810 Feet Observation Time: 0730

Day	Oct	Nov	Dec	Jan	Feb	Mar	Apr	May	Jun	Jul	Aug	Sep
1						0.07						
2												
3												
4												
5						0.37						
6						1.71						
7						0.02	0.76			0.05		
8							0.06					
9			0.01	0.14		0.02						
10					0.71	0.09	0.05					
11				3.89	0.14							
12	0.03			0.53	1.11							
13				0.07	2.00							
14					0.57							
15												
16												
17												
18												
19					0.06							
20					0.13							
21							0.54					
22												
23					0.02							
24				0.44	0.05							
25				0.13	0.76							
26				0.36	2.15							
27	0.05			0.34	0.06							
28	1.31				0.26							
29												
30												
31	0.74											
Totals	**2.13**	**0.00**	**0.01**	**5.90**	**8.02**	**2.28**	**1.41**	**0.00**	**0.00**	**0.05**	**0.00**	**0.00**

Water Year Total: **19.80**

NOTE: All values are in terms of inches, unless otherwise specified.

LEGEND:
- * - Unprocessed record
- E - Estimated
- I - Incomplete data
- M - Instrument malfunction
- N - No data available
- Q - Questionable
- T - Trace, unmeasurable amount of rain
-) - Include in the following total

P R E C I P I T A T I O N

DAILY PRECIPITATION SUMMARY

Gage Type: *Standard 8 inch diameter (DPW)*

32C Newhall-Soledad Div.Hdqtrs

Water Year from 10/1/2000 to 9/30/2001

Latitude: 34-23-07 Longitude: 118-31-54 Elevation: 1243 Feet Observation Time: 1700

Day	Oct	Nov	Dec	Jan	Feb	Mar	Apr	May	Jun	Jul	Aug	Sep
1												
2												
3										T		
4						0.13						
5						0.63				T		
6						2.32	1.09					
7						0.07						
8				0.08								
9						T	0.22					
10				0.67	0.44							
11				3.65	0.35							
12					4.06							
13					0.20							
14												
15												
16												
17												
18					0.10							
19					0.24							
20												
21												
22												
23				0.40								
24					0.93							
25				0.28	1.61							
26	0.13				0.13							
27	0.22				0.26							
28	T				0.02							
29												
30	0.72											
31												
Totals	**1.07**	**0.00**	**0.00**	**5.08**	**8.34**	**3.15**	**1.31**	**0.00**	**0.00**	**0.00**	**0.00**	**0.00**

Water Year Total: **18.95**

NOTE: All values are in terms of inches, unless otherwise specified.

LEGEND:
- * - Unprocessed record
- E - Estimated
- I - Incomplete data
- M - Instrument malfunction
- N - No data available
- Q - Questionable
- T - Trace, unmeasurable amount of rain
-) - Include in the following total

P R E C I P I T A T I O N

DAILY PRECIPITATION SUMMARY

Gage Type: *Automatic recording gage (DPW)*

33A Pacoima Dam

Water Year from 10/1/2000 to 9/30/2001

Latitude: 34-19-48 Longitude: 118-23-59 Elevation: 1500 Feet Observation Time: 2400

Day	Oct	Nov	Dec	Jan	Feb	Mar	Apr	May	Jun	Jul	Aug	Sep
1												
2												
3												
4						0.52	0.04					
5						1.24						
6						0.88						
7							1.60					
8				0.12								
9				0.03		0.24	0.04					
10				1.38	0.64	0.04						
11				2.48	0.96							
12				0.40	2.76							
13					2.32							
14					0.04							
15												
16												
17												
18	0.08				0.04							
19					0.16							
20							0.68					
21							0.20					
22												
23					0.12							
24				0.67	0.84							
25					1.40							
26	0.47				0.60							
27	0.87				0.28							
28					0.04							
29	1.26											
30												
31												
Totals	**2.68**	**0.00**	**0.00**	**5.08**	**10.20**	**2.92**	**2.56**	**0.00**	**0.00**	**0.00**	**0.00**	**0.00**

Water Year Total: **23.44**

NOTE: All values are in terms of inches, unless otherwise specified.

LEGEND:
- * - Unprocessed record
- E - Estimated
- I - Incomplete data
- M - Instrument malfunction
- N - No data available
- Q - Questionable
- T - Trace, unmeasurable amount of rain
-) - Include in the following total

P R E C I P I T A T I O N

DAILY PRECIPITATION SUMMARY

Gage Type: *Standard 8 inch diameter (DPW)*

42C Redondo Beach-City Hall

Water Year from 10/1/2000 to 9/30/2001

Latitude: 33-50-43 Longitude: 118-23-20 Elevation: 70 Feet Observation Time: 0800

Day	Oct	Nov	Dec	Jan	Feb	Mar	Apr	May	Jun	Jul	Aug	Sep
1												
2												
3												
4						0.04				0.01		
5				T		0.95						
6	0.05			T		0.68						
7												
8				0.32								
9				T								
10	0.05			2.15	0.13							
11	0.31			0.69	0.09							
12				0.74	1.38			0.01				
13					1.75							
14												
15												
16												
17												
18					0.09							
19					0.09							
20												
21												
22												
23					0.19							
24				0.31	0.52							
25					2.54							
26	0.14			0.63	0.70							
27	0.81				0.30			0.03				
28	0.02				0.17							
29	0.31											
30												
31												
Totals	**1.69**	**0.00**	**0.00**	**4.84**	**7.95**	**1.67**	**0.00**	**0.04**	**0.00**	**0.01**	**0.00**	**0.00**

Water Year Total: **16.20**

NOTE: All values are in terms of inches, unless otherwise specified.

LEGEND:
- * - Unprocessed record
- E - Estimated
- I - Incomplete data
- M - Instrument malfunction
- N - No data available
- Q - Questionable
- T - Trace, unmeasurable amount of rain
-) - Include in the following total

P R E C I P I T A T I O N

DAILY PRECIPITATION SUMMARY

Gage Type: *Standard 8 inch diameter (DPW)*

43D Palos Verdes Estates

Water Year from 10/1/2000 to 9/30/2001

Latitude: 33-47-58 Longitude: 118-23-29 Elevation: 216 Feet Observation Time: 1600

Day	Oct	Nov	Dec	Jan	Feb	Mar	Apr	May	Jun	Jul	Aug	Sep
1						0.12						
2												
3												
4												
5												
6						2.12						
7												
8				0.34								
9							0.31					
10	0.03											
11	0.09			1.99								
12				0.97	0.84							
13					2.16							
14					0.02							
15												
16												
17												
18												
19												
20					0.34							
21												
22												
23							0.29					
24				0.31								
25				0.37								
26					3.48							
27	2.16			0.26	0.28							
28	0.01				0.34							
29	0.24											
30												
31												
Totals	**2.53**	**0.00**	**0.00**	**4.24**	**7.46**	**2.24**	**0.60**	**0.00**	**0.00**	**0.00**	**0.00**	**0.00**

Water Year Total: **17.07**

NOTE: All values are in terms of inches, unless otherwise specified.

LEGEND:
- * - Unprocessed record
- E - Estimated
- I - Incomplete data
- M - Instrument malfunction
- N - No data available
- Q - Questionable
- T - Trace, unmeasurable amount of rain
-) - Include in the following total

P R E C I P I T A T I O N

DAILY PRECIPITATION SUMMARY

Gage Type: *Automatic recording gage (DPW)*

44A Point Vicente Lighthouse

Water Year from 10/1/2000 to 9/30/2001

Latitude: 33-44-30 Longitude: 118-24-38 Elevation: 125 Feet Observation Time: 2400

Day	Oct	Nov	Dec	Jan	Feb	Mar	Apr	May	Jun	Jul	Aug	Sep
1						0.04						
2				0.04								
3												
4												
5						1.04						
6						0.84						
7							0.16					
8				0.23								
9							0.04					
10				1.34	0.36							
11				0.55								
12				0.44	1.20							
13					0.56							
14					0.28							
15												
16												
17												
18			0.12									
19					0.16							
20												
21							0.04					
22												
23					0.12							
24				0.15	0.40							
25					1.52							
26	0.16			0.16	0.40							
27	1.02				0.28							
28					0.12							
29	0.16											
30												
31												
Totals	**1.34**	**0.00**	**0.12**	**2.91**	**5.40**	**1.92**	**0.24**	**0.00**	**0.00**	**0.00**	**0.00**	**0.00**

Water Year Total: **11.93**

NOTE: All values are in terms of inches, unless otherwise specified.

LEGEND:
- * - Unprocessed record
- E - Estimated
- I - Incomplete data
- M - Instrument malfunction
- N - No data available
- Q - Questionable
- T - Trace, unmeasurable amount of rain
-) - Include in the following total

P R E C I P I T A T I O N

DAILY PRECIPITATION SUMMARY

Gage Type: *Standard 8 inch diameter (DPW)*

46D Big Tujunga Dam

Water Year from 10/1/2000 to 9/30/2001

Latitude: 34-17-40 Longitude: 118-11-14 Elevation: 2315 Feet Observation Time: 0800

Day	Oct	Nov	Dec	Jan	Feb	Mar	Apr	May	Jun	Jul	Aug	Sep
1						0.08						
2						0.08						
3												
4												
5						0.53						
6				0.03						0.12		
7					0.03	0.19	0.87			0.05		
8							0.78					
9				0.11								
10	T				0.31	0.26	0.56					
11	0.02			0.54	0.52							
12				0.04	2.70		0.04					
13					3.65							
14					1.20							
15				0.11								
16												
17												
18												
19					0.03							
20					0.28							
21							1.27					
22												
23												
24				0.47	0.13							
25				0.23	0.95							
26	0.19			0.30	1.11							
27	0.31			0.23	0.03							
28	0.17			0.03	0.25							
29	0.08											
30	0.90											
31												
Totals	**1.67**	**0.00**	**0.00**	**2.09**	**11.19**	**1.14**	**3.52**	**0.00**	**0.00**	**0.17**	**0.00**	**0.00**

Water Year Total: **19.78**

NOTE: All values are in terms of inches, unless otherwise specified.

LEGEND:
- * - Unprocessed record
- E - Estimated
- I - Incomplete data
- M - Instrument malfunction
- N - No data available
- Q - Questionable
- T - Trace, unmeasurable amount of rain
-) - Include in the following total

P R E C I P I T A T I O N

DAILY PRECIPITATION SUMMARY

Gage Type: *Automatic recording gage (DPW)*

47D Clear Creek-City School

Water Year from 10/1/2000 to 9/30/2001

Latitude: 34-16-38 Longitude: 118-10-12 Elevation: 3150 Feet Observation Time: 2400

Day	Oct	Nov	Dec	Jan	Feb	Mar	Apr	May	Jun	Jul	Aug	Sep
1												
2							0.04					
3							0.04					
4						0.44						
5				0.07		0.52				0.08		
6						1.56						
7					0.16	0.04	1.72					
8				0.12			0.04					
9						0.28	0.12					
10	0.08			1.70	0.52	0.04	0.04					
11				2.24	1.16		0.04					
12				0.16	3.40							
13				0.04	2.16							
14					0.56							
15												
16												
17												
18				0.07								
19					0.32							
20							0.80					
21							0.36					
22												
23					0.12							
24				0.67	0.68							
25					0.84							
26	0.31				0.32							
27	0.24				0.32							
28					0.16							
29	0.95			0.04								
30	0.04											
31												
Totals	**1.62**	**0.00**	**0.00**	**5.11**	**10.72**	**2.88**	**3.20**	**0.00**	**0.00**	**0.08**	**0.00**	**0.00**

Water Year Total: **23.61**

NOTE: All values are in terms of inches, unless otherwise specified.

LEGEND:
- * - Unprocessed record
- E - Estimated
- I - Incomplete data
- M - Instrument malfunction
- N - No data available
- Q - Questionable
- T - Trace, unmeasurable amount of rain
-) - Include in the following total

P R E C I P I T A T I O N

DAILY PRECIPITATION SUMMARY

Gage Type: *Automatic recording gage (DPW)*

54C Loomis Ranch-Alder Creek

Water Year from 10/1/2000 to 9/30/2001

Latitude: 34-20-55 Longitude: 118-02-54 Elevation: 4325 Feet Observation Time: 2400

Day	Oct	Nov	Dec	Jan	Feb	Mar	Apr	May	Jun	Jul	Aug	Sep
1												
2												
3												0.08
4						0.24						
5				0.03		0.24						
6						0.80						
7						0.16	0.76					
8				0.12								
9				0.16			0.04					
10				1.42	0.04	0.12	0.08					
11	0.08			0.94	0.16							
12				0.75	0.60							
13				0.08	0.72		0.04					
14					0.92							
15					0.96							
16				0.04								
17												
18					0.08							
19					0.16							
20							0.20					
21							0.20					
22							0.04					
23					0.08							
24				0.39	0.12							
25					0.68							
26	0.12			0.24	0.28							
27	0.35			0.16	0.16							
28					0.56							
29	0.36											
30	0.08											
31												
Totals	**0.99**	**0.00**	**0.00**	**4.33**	**5.52**	**1.56**	**1.36**	**0.00**	**0.00**	**0.00**	**0.00**	**0.08**

Water Year Total: **13.84**

NOTE: All values are in terms of inches, unless otherwise specified.

LEGEND:
- * - Unprocessed record
- E - Estimated
- I - Incomplete data
- M - Instrument malfunction
- N - No data available
- Q - Questionable
- T - Trace, unmeasurable amount of rain
-) - Include in the following total

P R E C I P I T A T I O N

DAILY PRECIPITATION SUMMARY

Gage Type: *Standard 8 inch diameter (DPW)*

63C Santa Anita Dam

Water Year from 10/1/2000 to 9/30/2001

Latitude: 34-11-03 Longitude: 118-01-12 Elevation: 1400 Feet Observation Time: 0800

Day	Oct	Nov	Dec	Jan	Feb	Mar	Apr	May	Jun	Jul	Aug	Sep
1						0.11						
2							0.24		0.01			
3									0.20			
4							0.07		0.05			
5						0.22						
6				T		0.84				0.20		
7					0.22	0.12	0.85					
8							0.62					
9			0.04	0.06		0.06						
10			0.01			0.78						
11				4.16	0.23	0.01						
12			0.02	0.91	1.39	0.01	0.05					
13				0.03	2.95		T	0.04				
14					0.61							
15					T							
16				0.03								
17												
18					T							
19					0.02							
20					0.28							
21							0.95					
22							T					
23					0.17							
24				0.23	0.06							
25				0.31	0.93							
26				0.15	1.79							
27				0.13	0.10			0.09				
28					0.60			0.13				
29												
30												
31												
Totals	**0.00**	**0.00**	**0.07**	**6.01**	**9.35**	**2.15**	**2.78**	**0.26**	**0.26**	**0.20**	**0.00**	**0.00**

Water Year Total: **21.08**

NOTE: All values are in terms of inches, unless otherwise specified.

LEGEND:
- * - Unprocessed record
- E - Estimated
- I - Incomplete data
- M - Instrument malfunction
- N - No data available
- Q - Questionable
- T - Trace, unmeasurable amount of rain
-) - Include in the following total

P R E C I P I T A T I O N

DAILY PRECIPITATION SUMMARY

Gage Type: *Standard 8 inch diameter (DPW)*

68C Sawpit Dam

Water Year from 10/1/2000 to 9/30/2001

Latitude: 34-10-30 Longitude: 117-59-07 Elevation: 1375 Feet Observation Time: 0800

Day	Oct	Nov	Dec	Jan	Feb	Mar	Apr	May	Jun	Jul	Aug	Sep
1												
2						0.67						
3							0.41					
4							0.04					
5									0.25			
6						1.09						
7						0.12						
8												
9				0.10		0.13						
10						0.67	1.20					
11				4.61								
12				0.72								
13				0.02								
14						0.06						
15								0.02				
16	0.04			0.05	5.43							
17												
18												
19												
20					0.26							
21												
22												
23	0.13											
24				0.52			1.05					
25												
26	0.22					0.03						
27					2.84							
28	1.32				0.57							
29								0.14				
30				0.42								
31												
Totals	**1.71**	**0.00**	**0.00**	**6.44**	**9.10**	**2.77**	**2.70**	**0.16**	**0.25**	**0.00**	**0.00**	**0.00**

Water Year Total: **23.13**

NOTE: All values are in terms of inches, unless otherwise specified.

LEGEND:
- * - Unprocessed record
- E - Estimated
- I - Incomplete data
- M - Instrument malfunction
- N - No data available
- Q - Questionable
- T - Trace, unmeasurable amount of rain
-) - Include in the following total

P R E C I P I T A T I O N

DAILY PRECIPITATION SUMMARY

Gage Type: *Standard 8 inch diameter (DPW)*

82F Table Mountain

Water Year from 10/1/2000 to 9/30/2001

Latitude: 34-22-56 Longitude: 117-40-39 Elevation: 7420 Feet Observation Time: 1330

Day	Oct	Nov	Dec	Jan	Feb	Mar	Apr	May	Jun	Jul	Aug	Sep
1												
2												
3												
4						0.15						
5												
6					)	)				)		
7					)	1.18)	0.70			)		
8				)	0.59)					0.24)		
9				0.85)			)					
10				)	)	)	0.17)					
11				)	1.71)	)						
12				2.30)	)	0.40)						
13					2.30)							
14												
15				)								
16				0.39)								
17												
18												
19												
20												
21					)		0.30					
22					)							
23					0.55)							
24					)							
25					)							
26				)	1.12)							
27				1.55)	4.10							
28					1.90							
29												
30												
31												
Totals	**0.00**	**0.00**	**0.00**	**5.09**	**12.27**	**1.73**	**1.17**	**0.00**	**0.00**	**0.24**	**0.00**	**0.00**

Water Year Total: **20.50**

NOTE: All values are in terms of inches, unless otherwise specified.

LEGEND:
- * - Unprocessed record
- E - Estimated
- I - Incomplete data
- M - Instrument malfunction
- N - No data available
- Q - Questionable
- T - Trace, unmeasurable amount of rain
-) - Include in the following total

P R E C I P I T A T I O N

DAILY PRECIPITATION SUMMARY

Gage Type: *Automatic recording gage (DPW)*

83B Big Pines Recreation Park

Water Year from 10/1/2000 to 9/30/2001

Latitude: 34-22-44 Longitude: 117-41-20 Elevation: 6860 Feet Observation Time: 2400

Day	Oct	Nov	Dec	Jan	Feb	Mar	Apr	May	Jun	Jul	Aug	Sep
1						0.28						
2						0.28						
3						0.68						0.08
4												
5						0.12						
6						0.56						
7						0.44						
8						0.48	0.28					
9												
10						0.28	0.32					
11												
12						0.16						
13												
14					0.60							
15					0.40							
16					0.04							
17												
18					0.12							
19					0.68							
20					0.12		0.04					
21							0.52					
22												
23												
24												
25					0.12							
26					0.56							
27			0.04		0.04							
28					0.28							
29												
30												
31												
Totals	**0.00**	**0.00**	**0.04**	**0.00**	**2.96**	**3.28**	**1.16**	**0.00**	**0.00**	**0.00**	**0.00**	**0.08**

Water Year Total: **7.52**

NOTE: All values are in terms of inches, unless otherwise specified.

LEGEND:
- * - Unprocessed record
- E - Estimated
- I - Incomplete data
- M - Instrument malfunction
- N - No data available
- Q - Questionable
- T - Trace, unmeasurable amount of rain
-) - Include in the following total

P R E C I P I T A T I O N

DAILY PRECIPITATION SUMMARY

Gage Type: *Standard 8 inch diameter (DPW)*

89B San Dimas Dam

Water Year from 10/1/2000 to 9/30/2001

Latitude: 34-09-10 Longitude: 117-46-17 Elevation: 1350 Feet Observation Time: 0800

Day	Oct	Nov	Dec	Jan	Feb	Mar	Apr	May	Jun	Jul	Aug	Sep
1						0.06						
2							0.04					
3							T		0.05			
4	0.01						T					
5						T	T					
6		T		0.02		0.61				0.11		
7	0.01			T	0.01	0.16	0.69			T		
8	T				T	0.04	0.59					
9			0.03	0.15		0.03						
10			T		0.05	0.65	0.19					
11	T	0.07		3.17	0.38	T	0.02					
12	0.06	0.05	0.03T	0.53	1.05	T	0.03					
13				0.01	2.68							
14					0.61							
15												
16				0.06								
17												
18												
19					0.01							
20					0.25		T					
21							0.95					
22	T											
23					0.02							
24				0.04	0.30							
25				0.58	0.90							
26	0.10			0.02	1.25							
27	0.72			0.23	0.07			T				
28	0.14			0.02	6.62			0.02				
29	T			0.05				T				
30	0.61											
31	T											
Totals	**1.65**	**0.12**	**0.06**	**4.88**	**14.20**	**1.55**	**2.51**	**0.02**	**0.05**	**0.11**	**0.00**	**0.00**

Water Year Total: **25.15**

NOTE: All values are in terms of inches, unless otherwise specified.

LEGEND:
- * - Unprocessed record
- E - Estimated
- I - Incomplete data
- M - Instrument malfunction
- N - No data available
- Q - Questionable
- T - Trace, unmeasurable amount of rain
-) - Include in the following total

P R E C I P I T A T I O N

DAILY PRECIPITATION SUMMARY

Gage Type: *8.81 inch diameter (DPW)*

93C Claremont-Police Station

Water Year from 10/1/2000 to 9/30/2001

Latitude: 34-05-45 Longitude: 117-43-18 Elevation: 1170 Feet Observation Time: 1700

Day	Oct	Nov	Dec	Jan	Feb	Mar	Apr	May	Jun	Jul	Aug	Sep
1												
2							0.07					
3									0.05			
4												
5										0.44		
6						0.70						
7						0.04	0.92					
8				0.15			0.08					
9												
10				0.42	0.29	0.31						
11		0.06		4.11								
12					2.21							
13					1.55							
14					0.15							
15				0.02								
16												
17												
18												
19												
20					0.16							
21							0.73					
22												
23					0.28							
24				0.42	0.36							
25					0.94							
26	0.14				0.71							
27	0.62				0.56			0.05				
28				0.31	0.11							
29	0.13											
30	0.37											
31												
Totals	**1.26**	**0.06**	**0.00**	**5.43**	**7.32**	**1.05**	**1.80**	**0.05**	**0.05**	**0.44**	**0.00**	**0.00**

Water Year Total: **17.46**

NOTE: All values are in terms of inches, unless otherwise specified.

LEGEND:
- * - Unprocessed record
- E - Estimated
- I - Incomplete data
- M - Instrument malfunction
- N - No data available
- Q - Questionable
- T - Trace, unmeasurable amount of rain
-) - Include in the following total

P R E C I P I T A T I O N

DAILY PRECIPITATION SUMMARY

Gage Type: *Standard 8 inch diameter (DPW)*

95 San Dimas-Fire Warden

Water Year from 10/1/2000 to 9/30/2001

Latitude: 34-06-26 Longitude: 117-48-19 Elevation: 955 Feet Observation Time: 0800

Day	Oct	Nov	Dec	Jan	Feb	Mar	Apr	May	Jun	Jul	Aug	Sep
1												
2												
3												
4												
5												
6												
7						0.71						
8				0.10			0.49					
9												
10												
11				2.25	0.47							
12				0.36								
13					1.68							
14					0.56							
15												
16												
17												
18												
19												
20					0.20							
21							0.21					
22												
23												
24					0.25							
25				0.40	0.35							
26					2.10							
27				0.25								
28					0.58							
29												
30												
31												
Totals	**0.00**	**0.00**	**0.00**	**3.36**	**6.19**	**0.71**	**0.70**	**0.00**	**0.00**	**0.00**	**0.00**	**0.00**

Water Year Total: **10.96**

NOTE: All values are in terms of inches, unless otherwise specified.

LEGEND:
- * - Unprocessed record
- E - Estimated
- I - Incomplete data
- M - Instrument malfunction
- N - No data available
- Q - Questionable
- T - Trace, unmeasurable amount of rain
-) - Include in the following total

P R E C I P I T A T I O N

DAILY PRECIPITATION SUMMARY

Gage Type: *Standard 8 inch diameter (DPW)*

96C Puddingstone Dam

Water Year from 10/1/2000 to 9/30/2001

Latitude: 34-05-31 Longitude: 117-48-24 Elevation: 1030 Feet Observation Time: 0800

Day	Oct	Nov	Dec	Jan	Feb	Mar	Apr	May	Jun	Jul	Aug	Sep
1						0.10						
2							0.01					
3									0.03			
4	T											
5						T						
6						0.55				0.05		
7						0.05	0.66					
8					0.02	0.01	0.31					
9				0.16		T						
10					0.05	0.20	0.06					
11				3.21	0.39							
12				0.40	1.07							
13					2.73							
14					0.58							
15												
16				0.01								
17												
18												
19					0.01							
20					0.18							
21							0.80					
22	T											
23					0.02							
24				0.06	0.18							
25				0.41	0.88	T						
26	0.05			0.06	1.32							
27	1.04			0.22	0.03			0.02				
28	0.03			T	0.59			0.05				
29												
30	0.44											
31												
Totals	**1.56**	**0.00**	**0.00**	**4.53**	**8.05**	**0.91**	**1.84**	**0.07**	**0.03**	**0.05**	**0.00**	**0.00**

Water Year Total: **17.04**

NOTE: All values are in terms of inches, unless otherwise specified.

LEGEND:
- * - Unprocessed record
- E - Estimated
- I - Incomplete data
- M - Instrument malfunction
- N - No data available
- Q - Questionable
- T - Trace, unmeasurable amount of rain
-) - Include in the following total

P R E C I P I T A T I O N

DAILY PRECIPITATION SUMMARY

Gage Type: *Standard 8 inch diameter (DPW)*

106F Whittier City Yard

Water Year from 10/1/2000 to 9/30/2001

Latitude: 33-58-57 Longitude: 118-02-50 Elevation: 300 Feet Observation Time: 1700

Day	Oct	Nov	Dec	Jan	Feb	Mar	Apr	May	Jun	Jul	Aug	Sep
1												
2												
3												
4												
5							0.09					
6						0.36						
7							0.83					
8				0.21								
9												
10				1.42	0.17							
11	0.11			1.49	0.08							
12				0.21	2.15							
13					1.22							
14												
15												
16												
17												
18												
19					0.33							
20												
21							0.31					
22												
23					0.22							
24				0.52	0.29							
25					1.60							
26	0.14											
27	1.13											
28												
29	0.42											
30												
31												
Totals	**1.80**	**0.00**	**0.00**	**3.85**	**6.06**	**0.36**	**1.23**	**0.00**	**0.00**	**0.00**	**0.00**	**0.00**

Water Year Total: **13.30**

NOTE: All values are in terms of inches, unless otherwise specified.

LEGEND:
- * - Unprocessed record
- E - Estimated
- I - Incomplete data
- M - Instrument malfunction
- N - No data available
- Q - Questionable
- T - Trace, unmeasurable amount of rain
-) - Include in the following total

P R E C I P I T A T I O N

DAILY PRECIPITATION SUMMARY

Gage Type: *Standard 8 inch diameter (DPW)*

107D Downey-Fire Department

Water Year from 10/1/2000 to 9/30/2001

Latitude: 33-55-48 Longitude: 118-08-47 Elevation: 110 Feet Observation Time: 1700

Day	Oct	Nov	Dec	Jan	Feb	Mar	Apr	May	Jun	Jul	Aug	Sep
1												
2												
3												
4												
5												
6												
7							0.54					
8				0.65								
9												
10												
11				3.45	0.08							
12				0.10	1.05							
13					1.93							
14					0.27							
15												
16												
17												
18					0.03							
19					0.26							
20												
21					0.24							
22												
23												
24				0.48	0.43							
25					2.10							
26				0.70	0.17							
27	1.05				0.15							
28					0.43							
29	0.52											
30	0.35											
31												
Totals	**1.92**	**0.00**	**0.00**	**5.38**	**7.14**	**0.00**	**0.54**	**0.00**	**0.00**	**0.00**	**0.00**	**0.00**

Water Year Total: **14.98**

NOTE: All values are in terms of inches, unless otherwise specified.

LEGEND:
- * - Unprocessed record
- E - Estimated
- I - Incomplete data
- M - Instrument malfunction
- N - No data available
- Q - Questionable
- T - Trace, unmeasurable amount of rain
-) - Include in the following total

P R E C I P I T A T I O N

DAILY PRECIPITATION SUMMARY

Gage Type: *Standard 8 inch diameter (DPW)*

108D El Monte Fire Station

Water Year from 10/1/2000 to 9/30/2001

Latitude: 34-04-30 Longitude: 118-02-30 Elevation: 275 Feet Observation Time: 0800

Day	Oct	Nov	Dec	Jan	Feb	Mar	Apr	May	Jun	Jul	Aug	Sep
1						0.11						
2												
3												
4												
5												
6						0.37						
7												
8												
9				0.80			1.06					
10						0.13						
11					2.20							
12					0.35							
13												
14												
15												
16												
17												
18												
19												
20												
21												
22												
23							0.82					
24					1.98							
25					0.89							
26					1.48							
27					0.15							
28					0.48							
29												
30	1.67											
31												
Totals	**1.67**	**0.00**	**0.00**	**0.80**	**7.53**	**0.61**	**1.88**	**0.00**	**0.00**	**0.00**	**0.00**	**0.00**

Water Year Total: **12.49**

NOTE: All values are in terms of inches, unless otherwise specified.

LEGEND:
- * - Unprocessed record
- E - Estimated
- I - Incomplete data
- M - Instrument malfunction
- N - No data available
- Q - Questionable
- T - Trace, unmeasurable amount of rain
-) - Include in the following total

P R E C I P I T A T I O N

DAILY PRECIPITATION SUMMARY

Gage Type: *Standard 8 inch diameter (DPW)*

109D West Arcadia

Water Year from 10/1/2000 to 9/30/2001

Latitude: 34-07-42 Longitude: 118-04-22 Elevation: 547 Feet Observation Time: 1700

Day	Oct	Nov	Dec	Jan	Feb	Mar	Apr	May	Jun	Jul	Aug	Sep
1												
2												
3												
4												
5												
6						0.75						
7												
8				0.05								
9												
10				0.54	0.25							
11				2.75	0.05							
12				0.59	1.61							
13			0.01		2.39							
14												
15												
16												
17												
18												
19												
20												
21												
22												
23												
24				0.46	0.92							
25					0.90							
26												
27												
28					2.43							
29												
30				3.25			0.55					
31												
Totals	**0.00**	**0.00**	**0.01**	**7.64**	**8.55**	**0.75**	**0.55**	**0.00**	**0.00**	**0.00**	**0.00**	**0.00**

Water Year Total: **17.50**

NOTE: All values are in terms of inches, unless otherwise specified.

LEGEND:
- * - Unprocessed record
- E - Estimated
- I - Incomplete data
- M - Instrument malfunction
- N - No data available
- Q - Questionable
- T - Trace, unmeasurable amount of rain
-) - Include in the following total

P R E C I P I T A T I O N

DAILY PRECIPITATION SUMMARY

Gage Type: *Standard 8 inch diameter (DPW)*

120 Vincent Patrol Station

Water Year from 10/1/2000 to 9/30/2001

Latitude: 34-29-17 Longitude: 118-08-27 Elevation: 3135 Feet Observation Time: 1700

Day	Oct	Nov	Dec	Jan	Feb	Mar	Apr	May	Jun	Jul	Aug	Sep
1												
2												
3												
4												
5												
6						0.49						
7					0.20		0.36					
8				0.03								
9				0.21		0.01						
10					0.80							
11		0.26		0.03								
12					0.50	0.05						
13					1.00							
14					0.30							
15					0.50							
16												
17												
18												
19												
20												
21							0.32					
22												
23												
24												
25												
26				0.47								
27	0.10			1.42	0.54							
28	0.08				0.21							
29												
30	0.12											
31												
Totals	**0.30**	**0.26**	**0.00**	**2.16**	**4.05**	**0.55**	**0.68**	**0.00**	**0.00**	**0.00**	**0.00**	**0.00**

Water Year Total: **8.00**

NOTE: All values are in terms of inches, unless otherwise specified.

LEGEND:
- * - Unprocessed record
- E - Estimated
- I - Incomplete data
- M - Instrument malfunction
- N - No data available
- Q - Questionable
- T - Trace, unmeasurable amount of rain
-) - Include in the following total

P R E C I P I T A T I O N

DAILY PRECIPITATION SUMMARY

Gage Type: *Standard 8 inch diameter*

125B San Francisquito Canyon Ph#1 - Saugus

Water Year from 10/1/2000 to 9/30/2001

Latitude: 34-35-25 Longitude: 118-27-15 Elevation: 2105 Feet Observation Time: 0700

Day	Oct	Nov	Dec	Jan	Feb	Mar	Apr	May	Jun	Jul	Aug	Sep
1												
2							0.02					
3												
4							0.01					
5						0.45	T					
6						1.00	T			T		
7	0.03		T			0.16	1.23					
8			T	0.01			0.05					
9				0.10		0.03	0.05					
10	0.02				0.51	0.53	0.10					
11	0.12	0.06		2.02	0.12							
12	0.02		0.01	0.39	2.21	0.01	0.05					
13				T	1.42							
14				0.02	0.06							
15					0.02							
16												
17												
18					0.04							
19					0.31							
20					0.12							
21							0.57					
22												
23					0.08							
24				0.46	0.32							
25					0.46							
26	0.19			0.46	0.98							
27	0.10			0.03	0.21							
28					0.43							
29	0.20											
30	0.67											
31												
Totals	1.35	0.06	0.01	3.49	7.29	2.18	2.08	0.00	0.00	0.00	0.00	0.00

Water Year Total: 16.46

NOTE: All values are in terms of inches, unless otherwise specified.

LEGEND:
- * - Unprocessed record
- E - Estimated
- I - Incomplete data
- M - Instrument malfunction
- N - No data available
- Q - Questionable
- T - Trace, unmeasurable amount of rain
-) - Include in the following total

P R E C I P I T A T I O N

DAILY PRECIPITATION SUMMARY

Gage Type: *8.81 inch diameter (DPW)*

134C Puddingstone Diversion

Water Year from 10/1/2000 to 9/30/2001

Latitude: 34-07-52 Longitude: 117-46-55 Elevation: 1160 Feet Observation Time: 0730

Day	Oct	Nov	Dec	Jan	Feb	Mar	Apr	May	Jun	Jul	Aug	Sep
1						0.07						
2												
3									0.12			
4	0.01						0.01		0.03			
5						T	T					
6				0.01		0.42						
7	0.03					0.07	0.50					
8	T				0.01		0.41			0.08		
9			0.06	0.14		T						
10	T		T		0.06	0.57	0.12					
11	T	0.02		2.85	0.34	T	T					
12	0.03	0.02	0.04	0.41	0.86	0.02	0.02					
13				T	2.30			T	T			
14					0.53							
15												
16				0.07								
17												
18												
19					0.02							
20					0.15							
21							0.69					
22	0.08											
23					0.02							
24				0.04	0.31							
25				0.37	0.67							
26	0.03			T	1.09							
27	0.74			0.21	0.05			0.06				
28	0.12				0.51			0.11				
29	T							T				
30	0.41											
31	T											
Totals	**1.45**	**0.04**	**0.10**	**4.10**	**6.92**	**1.15**	**1.75**	**0.17**	**0.15**	**0.08**	**0.00**	**0.00**

Water Year Total: **15.91**

NOTE: All values are in terms of inches, unless otherwise specified.

LEGEND:
- * - Unprocessed record
- E - Estimated
- I - Incomplete data
- M - Instrument malfunction
- N - No data available
- Q - Questionable
- T - Trace, unmeasurable amount of rain
-) - Include in the following total

P R E C I P I T A T I O N

DAILY PRECIPITATION SUMMARY

Gage Type: *Standard 8 inch diameter (DPW)*

144 Sierra Madre Dam

Water Year from 10/1/2000 to 9/30/2001

Latitude: 34-10-34 Longitude: 118-02-32 Elevation: 1100 Feet Observation Time: 0700

Day	Oct	Nov	Dec	Jan	Feb	Mar	Apr	May	Jun	Jul	Aug	Sep
1						0.12						
2							0.25					
3									0.12			
4												
5						0.22						
6						0.78				0.10		
7					0.17	0.07	0.64					
8					0.05		0.69					
9				0.05		0.06						
10					0.09	0.74						
11				3.56								
12		0.03		0.78	1.46							
13				0.03	2.43							
14					0.50							
15												
16				0.05								
17												
18												
19	0.06				0.04							
20					0.21							
21							0.78					
22	0.08											
23					0.06							
24				0.12								
25				0.42	0.81							
26	0.19			0.02	1.99	0.03						
27	0.30			0.29	0.09			0.05				
28				0.02	0.58			0.11				
29	0.83											
30												
31												
Totals	**1.46**	**0.03**	**0.00**	**5.34**	**8.48**	**2.02**	**2.36**	**0.16**	**0.12**	**0.10**	**0.00**	**0.00**

Water Year Total: **20.07**

NOTE: All values are in terms of inches, unless otherwise specified.

LEGEND:
- * - Unprocessed record
- E - Estimated
- I - Incomplete data
- M - Instrument malfunction
- N - No data available
- Q - Questionable
- T - Trace, unmeasurable amount of rain
-) - Include in the following total

P R E C I P I T A T I O N

DAILY PRECIPITATION SUMMARY

Gage Type: *Automatic recording gage (DPW)*

156B La Mirada-Standard Oil Company

Water Year from 10/1/2000 to 9/30/2001

Latitude: 33-52-59 Longitude: 118-01-00 Elevation: 75 Feet Observation Time: 2400

Day	Oct	Nov	Dec	Jan	Feb	Mar	Apr	May	Jun	Jul	Aug	Sep
1												
2												
3												
4												
5												
6						0.36						
7						0.08	0.52					
8				0.20								
9				0.04		0.04						
10		0.11		1.18	0.24							
11	0.20			1.38								
12				0.28	1.88							
13					1.00							
14												
15												
16												
17												
18												
19					0.20							
20					0.24							
21							0.24					
22												
23					0.32							
24				0.43	0.24							
25					1.60							
26	0.08			0.47	0.56							
27	1.06				0.32							
28					0.28							
29	0.32											
30	0.04											
31												
Totals	**1.70**	**0.11**	**0.00**	**3.98**	**6.88**	**0.48**	**0.76**	**0.00**	**0.00**	**0.00**	**0.00**	**0.00**

Water Year Total: **13.91**

NOTE: All values are in terms of inches, unless otherwise specified.

LEGEND:
- * - Unprocessed record
- E - Estimated
- I - Incomplete data
- M - Instrument malfunction
- N - No data available
- Q - Questionable
- T - Trace, unmeasurable amount of rain
-) - Include in the following total

P R E C I P I T A T I O N

DAILY PRECIPITATION SUMMARY

Gage Type: *Automatic recording gage (DPW)*

158 Tanbark Flats

Water Year from 10/1/2000 to 9/30/2001

Latitude: 34-12-20 Longitude: 117-45-40 Elevation: 2750 Feet Observation Time: 2400

Day	Oct	Nov	Dec	Jan	Feb	Mar	Apr	May	Jun	Jul	Aug	Sep
1												
2												
3												
4												
5												
6						1.32						
7					0.48	0.16						
8				0.19								
9				0.04		0.84						
10				2.17		0.04						
11				2.99	0.92							
12					4.72							
13		0.08	0.04		3.12							
14												
15												
16												
17			0.08									
18												
19					0.72							
20												
21					0.24							
22												
23												
24				0.75								
25												
26				0.04								
27				0.04								
28												
29												
30				0.35								
31												
Totals	**0.00**	**0.08**	**0.12**	**6.57**	**10.20**	**2.36**	**0.00**	**0.00**	**0.00**	**0.00**	**0.00**	**0.00**

Water Year Total: **19.33**

NOTE: All values are in terms of inches, unless otherwise specified.

LEGEND:
- * - Unprocessed record
- E - Estimated
- I - Incomplete data
- M - Instrument malfunction
- N - No data available
- Q - Questionable
- T - Trace, unmeasurable amount of rain
-) - Include in the following total

P R E C I P I T A T I O N

DAILY PRECIPITATION SUMMARY

Gage Type: *Standard 8 inch diameter (DPW)*

167C Arcadia Pumping Plant #1

Water Year from 10/1/2000 to 9/30/2001

Latitude: 34-09-31 Longitude: 118-02-02 Elevation: 611 Feet Observation Time: 1700

Day	Oct	Nov	Dec	Jan	Feb	Mar	Apr	May	Jun	Jul	Aug	Sep
1												
2							0.02					
3						0.13			0.02			
4												
5										0.10		
6						0.70						
7					0.40	0.03	1.16					
8				0.06								
9												
10				0.30	0.18	0.60						
11				3.90	0.20		0.01					
12				0.14	1.50							
13					2.58							
14					0.14							
15				0.04								
16				0.02								
17												
18												
19					0.13							
20												
21							0.76					
22												
23					0.12							
24				0.50	0.42							
25					0.95							
26				0.27	1.10							
27					0.25			0.10				
28					0.40							
29												
30												
31												
Totals	**0.00**	**0.00**	**0.00**	**5.23**	**8.37**	**1.46**	**1.95**	**0.10**	**0.02**	**0.10**	**0.00**	**0.00**

Water Year Total: **17.23**

NOTE: All values are in terms of inches, unless otherwise specified.

LEGEND:
- * - Unprocessed record
- E - Estimated
- I - Incomplete data
- M - Instrument malfunction
- N - No data available
- Q - Questionable
- T - Trace, unmeasurable amount of rain
-) - Include in the following total

P R E C I P I T A T I O N

DAILY PRECIPITATION SUMMARY

Gage Type: *Standard 8 inch diameter*

169 Sierra Madre Pumping Plant

Water Year from 10/1/2000 to 9/30/2001

Latitude: 34-09-47 Longitude: 118-02-21 Elevation: 700 Feet Observation Time: 0700

Day	Oct	Nov	Dec	Jan	Feb	Mar	Apr	May	Jun	Jul	Aug	Sep
1						0.11						
2							0.13					
3									0.06			
4												
5						0.16						
6						0.68				0.10		
7					0.26	0.08	0.70					
8					0.05		0.70					
9				0.05		0.08						
10					0.08	0.70						
11				3.53								
12		0.02		0.74	1.56							
13				0.05	2.64							
14					0.53							
15												
16				0.04								
17												
18												
19	0.02				0.03							
20					0.18							
21							0.79					
22	0.05											
23					0.04							
24				0.23								
25				0.22	0.83							
26	0.17			0.02	1.82	0.01						
27	0.30			0.32	0.09			0.04				
28				0.02	0.51			0.10				
29	0.29											
30	0.13											
31												
Totals	**0.96**	**0.02**	**0.00**	**5.22**	**8.62**	**1.82**	**2.32**	**0.14**	**0.06**	**0.10**	**0.00**	**0.00**

Water Year Total: **19.26**

NOTE: All values are in terms of inches, unless otherwise specified.

LEGEND:
- * - Unprocessed record
- E - Estimated
- I - Incomplete data
- M - Instrument malfunction
- N - No data available
- Q - Questionable
- T - Trace, unmeasurable amount of rain
-) - Include in the following total

P R E C I P I T A T I O N

DAILY PRECIPITATION SUMMARY

Gage Type: *Standard 8 inch diameter (DPW)*

170F Potrero Heights

Water Year from 10/1/2000 to 9/30/2001

Latitude: 34-02-32 Longitude: 118-04-44 Elevation: 285 Feet Observation Time: 1700

Day	Oct	Nov	Dec	Jan	Feb	Mar	Apr	May	Jun	Jul	Aug	Sep
1												
2												
3												
4												
5						0.01						
6						0.44						
7					0.01	0.02	0.85					
8				0.10								
9				0.02								
10				0.24	0.47							
11	0.02			3.00	0.04							
12				0.23	1.36							
13					1.75							
14					0.16							
15												
16												
17												
18					0.02							
19					0.16							
20					0.19							
21							0.80					
22												
23					0.16							
24				0.58	0.60							
25					0.56							
26	0.04			0.45	1.67							
27	0.75			0.47	0.24							
28					0.48							
29	0.18											
30	0.64											
31												
Totals	**1.63**	**0.00**	**0.00**	**5.09**	**7.87**	**0.47**	**1.65**	**0.00**	**0.00**	**0.00**	**0.00**	**0.00**

Water Year Total: **16.71**

NOTE: All values are in terms of inches, unless otherwise specified.

LEGEND:
- * - Unprocessed record
- E - Estimated
- I - Incomplete data
- M - Instrument malfunction
- N - No data available
- Q - Questionable
- T - Trace, unmeasurable amount of rain
-) - Include in the following total

P R E C I P I T A T I O N

DAILY PRECIPITATION SUMMARY

Gage Type: *Standard 8 inch diameter (DPW)*
172B Duarte

Water Year from 10/1/2000 to 9/30/2001

Latitude: 34-08-26 Longitude: 117-58-02 Elevation: 548 Feet Observation Time: 1700

Day	Oct	Nov	Dec	Jan	Feb	Mar	Apr	May	Jun	Jul	Aug	Sep
1												
2												
3							0.08					
4							0.02					
5						0.06				0.10		
6						0.69						
7					0.05	0.02						
8				0.05								
9				0.05		0.08	0.97					
10							0.08					
11				3.50								
12	0.05			0.08	1.78	0.38						
13												
14					2.20							
15												
16				0.07								
17												
18												
19												
20					0.15							
21												
22												
23					0.14		0.75					
24				0.48								
25												
26	0.70			0.23	2.27							
27												
28					0.71							
29												
30	0.52											
31												
Totals	**1.27**	**0.00**	**0.00**	**4.46**	**7.30**	**1.23**	**1.90**	**0.00**	**0.00**	**0.10**	**0.00**	**0.00**

Water Year Total: **16.26**

NOTE: All values are in terms of inches, unless otherwise specified.

LEGEND:
* - Unprocessed record
E - Estimated
I - Incomplete data
M - Instrument malfunction
N - No data available
Q - Questionable
T - Trace, unmeasurable amount of rain
) - Include in the following total

P R E C I P I T A T I O N

DAILY PRECIPITATION SUMMARY

Gage Type: *Standard 8 inch diameter (DPW)*
174B Glendora

Water Year from 10/1/2000 to 9/30/2001

Latitude: 34-07-43 Longitude: 117-49-08 Elevation: 930 Feet Observation Time: 1500

Day	Oct	Nov	Dec	Jan	Feb	Mar	Apr	May	Jun	Jul	Aug	Sep
1												
2												
3												
4												
5												
6												
7					0.08							
8				0.15								
9												
10				0.28	0.29		1.20					
11	0.05	0.03		2.68								
12					2.00							
13					2.12							
14												
15												
16												
17												
18					0.15							
19					0.05							
20												
21							0.68					
22	0.02											
23					0.25							
24				0.44	0.48							
25					0.75							
26	0.18			0.14	0.75							
27	0.08				0.27							
28	0.02											
29	0.10											
30	0.48											
31												
Totals	**0.93**	**0.03**	**0.00**	**3.69**	**7.19**	**0.00**	**1.88**	**0.00**	**0.00**	**0.00**	**0.00**	**0.00**

Water Year Total: **13.72**

NOTE: All values are in terms of inches, unless otherwise specified.

LEGEND:
- * - Unprocessed record
- E - Estimated
- I - Incomplete data
- M - Instrument malfunction
- N - No data available
- Q - Questionable
- T - Trace, unmeasurable amount of rain
-) - Include in the following total

P R E C I P I T A T I O N

DAILY PRECIPITATION SUMMARY

Gage Type: *Standard 8 inch diameter (DPW)*

175B La Canada Irrigation District

Water Year from 10/1/2000 to 9/30/2001

Latitude: 34-13-39 Longitude: 118-12-40 Elevation: 2020 Feet Observation Time: 0800

Day	Oct	Nov	Dec	Jan	Feb	Mar	Apr	May	Jun	Jul	Aug	Sep
1												
2							0.25					
3									0.18			
4							0.06					
5												
6				0.08								
7					0.19		0.92					
8			0.04				0.50					
9			0.01	0.13								
10					0.42							
11	0.07			3.80	0.16							
12			0.01	0.98	2.30							
13				0.08	3.20							
14					0.58							
15												
16				0.17								
17												
18					0.03							
19												
20					0.39							
21							0.85					
22												
23					0.18							
24				0.41	0.01							
25				0.13	0.80							
26	0.24			0.21	1.60							
27	0.38			0.22	0.08							
28					0.48							
29				0.02								
30	1.22											
31												
Totals	**1.91**	**0.00**	**0.06**	**6.23**	**10.42**	**0.00**	**2.58**	**0.00**	**0.18**	**0.00**	**0.00**	**0.00**

Water Year Total: **21.38**

NOTE: All values are in terms of inches, unless otherwise specified.

LEGEND:
- * - Unprocessed record
- E - Estimated
- I - Incomplete data
- M - Instrument malfunction
- N - No data available
- Q - Questionable
- T - Trace, unmeasurable amount of rain
-) - Include in the following total

P R E C I P I T A T I O N

DAILY PRECIPITATION SUMMARY

Gage Type: *Standard 8 inch diameter*

176 Altadena-Rubio Canyon

Water Year from 10/1/2000 to 9/30/2001

Latitude: 34-10-55 Longitude: 118-08-15 Elevation: 1125 Feet Observation Time: 0700

Day	Oct	Nov	Dec	Jan	Feb	Mar	Apr	May	Jun	Jul	Aug	Sep
1												
2							0.06					
3												
4									0.01			
5						0.57						
6						0.90						
7					0.11		0.89					
8							0.49					
9				0.06								
10												
11				3.89								
12				0.24	1.97							
13					3.10							
14					0.73							
15												
16				0.25								
17												
18												
19					0.06							
20					0.26							
21												
22												
23												
24												
25	0.60			0.49								
26					2.52							
27				0.34	0.07							
28												
29								0.07				
30	0.90											
31												
Totals	**1.50**	**0.00**	**0.00**	**5.27**	**8.82**	**1.47**	**1.44**	**0.07**	**0.01**	**0.00**	**0.00**	**0.00**

Water Year Total: **18.58**

NOTE: All values are in terms of inches, unless otherwise specified.

LEGEND:
- * - Unprocessed record
- E - Estimated
- I - Incomplete data
- M - Instrument malfunction
- N - No data available
- Q - Questionable
- T - Trace, unmeasurable amount of rain
-) - Include in the following total

P R E C I P I T A T I O N

DAILY PRECIPITATION SUMMARY

Gage Type: *Standard 8 inch diameter (DPW)*

196C La Verne-Fire Station

Water Year from 10/1/2000 to 9/30/2001

Latitude: 34-06-06 Longitude: 117-46-20 Elevation: 1050 Feet Observation Time: 0700

Day	Oct	Nov	Dec	Jan	Feb	Mar	Apr	May	Jun	Jul	Aug	Sep
1						0.08	0.01					
2							0.02					
3												
4												
5						1.27						
6						1.88				0.01		
7						0.05	1.29					
8				0.09	0.03		0.04					
9						0.01						
10					0.82	0.04						
11				2.68	0.06							
12	0.04			0.60	1.25	0.03						
13				0.07	2.23							
14					0.21							
15												
16												
17												
18					0.01							
19					0.03							
20					0.14							
21							0.62					
22												
23					0.08							
24				0.42								
25				0.06	0.66							
26	0.13			0.44	1.56							
27	0.23			0.40	0.19							
28					0.40							
29												
30	0.76											
31												
Totals	**1.16**	**0.00**	**0.00**	**4.76**	**7.67**	**3.36**	**1.98**	**0.00**	**0.00**	**0.01**	**0.00**	**0.00**

Water Year Total: **18.94**

NOTE: All values are in terms of inches, unless otherwise specified.

LEGEND:
- * - Unprocessed record
- E - Estimated
- I - Incomplete data
- M - Instrument malfunction
- N - No data available
- Q - Questionable
- T - Trace, unmeasurable amount of rain
-) - Include in the following total

P R E C I P I T A T I O N

DAILY PRECIPITATION SUMMARY

Gage Type: *Automatic recording gage (DPW)*

201D Hacienda Heights

Water Year from 10/1/2000 to 9/30/2001

Latitude: 33-59-40 Longitude: 117-59-28 Elevation: 875 Feet Observation Time: 2400

Day	Oct	Nov	Dec	Jan	Feb	Mar	Apr	May	Jun	Jul	Aug	Sep
1												
2												
3												
4												
5							0.08					
6						0.40						
7							0.96					
8				0.16								
9						0.04	0.04					
10				1.61	0.28							
11	0.04			1.66	0.12							
12				0.15	2.44							
13					1.32							
14												
15												
16												
17												
18												
19					0.36							
20							0.12					
21							0.24					
22												
23					0.20							
24				0.44	0.40							
25					1.64							
26	0.08			0.47	0.48							
27	1.14				0.32							
28					0.28							
29	0.55											
30												
31												
Totals	**1.81**	**0.00**	**0.00**	**4.49**	**7.84**	**0.44**	**1.44**	**0.00**	**0.00**	**0.00**	**0.00**	**0.00**

Water Year Total: **16.02**

NOTE: All values are in terms of inches, unless otherwise specified.

LEGEND:
- * - Unprocessed record
- E - Estimated
- I - Incomplete data
- M - Instrument malfunction
- N - No data available
- Q - Questionable
- T - Trace, unmeasurable amount of rain
-) - Include in the following total

P R E C I P I T A T I O N

DAILY PRECIPITATION SUMMARY

Gage Type: *Automatic recording gage (DPW)*

210C Brand Park

Water Year from 10/1/2000 to 9/30/2001

Latitude: 34-11-18 Longitude: 118-16-20 Elevation: 1250 Feet Observation Time: 2400

Day	Oct	Nov	Dec	Jan	Feb	Mar	Apr	May	Jun	Jul	Aug	Sep
1												
2												
3												
4						0.36						
5						0.20						
6						0.76						
7					0.04		1.28					
8				0.12								
9						0.16						
10				1.97	0.32							
11				1.53	0.44							
12				0.32	2.16							
13					1.64							
14					0.04							
15												
16												
17												
18												
19					0.24							
20							0.48					
21							0.04					
22												
23					0.08							
24				0.39	0.32							
25					1.24							
26	0.31			0.04	0.28							
27	0.24			0.04	0.32							
28					0.12							
29	0.63											
30												
31												
Totals	**1.18**	**0.00**	**0.00**	**4.41**	**7.24**	**1.48**	**1.80**	**0.00**	**0.00**	**0.00**	**0.00**	**0.00**

Water Year Total: **16.11**

NOTE: All values are in terms of inches, unless otherwise specified.

LEGEND:
- * - Unprocessed record
- E - Estimated
- I - Incomplete data
- M - Instrument malfunction
- N - No data available
- Q - Questionable
- T - Trace, unmeasurable amount of rain
-) - Include in the following total

P R E C I P I T A T I O N

DAILY PRECIPITATION SUMMARY

Gage Type: *Standard 8 inch diameter (DPW)*

216C Glendale - Jackson

Water Year from 10/1/2000 to 9/30/2001

Latitude: 34-09-54 Longitude: 118-15-01 Elevation: 615 Feet Observation Time: 0500

Day	Oct	Nov	Dec	Jan	Feb	Mar	Apr	May	Jun	Jul	Aug	Sep
1												
2												
3												
4						T						
5				T		0.37				0.01		
6	T			T		0.74						
7			T		T		1.18					
8			0.01	0.16								
9						T						
10	T			0.42	0.38	0.14						
11				3.36	T							
12				0.47								
13												
14												
15												
16												
17												
18												
19												
20							T					
21							0.48					
22												
23												
24				0.45								
25												
26	0.33			0.29								
27	0.37							T				
28												
29	0.14											
30	0.42											
31												
Totals	**1.26**	**0.00**	**0.01**	**5.15**	**0.38**	**1.25**	**1.66**	**0.00**	**0.00**	**0.01**	**0.00**	**0.00**

Water Year Total: **9.72**

NOTE: All values are in terms of inches, unless otherwise specified.

LEGEND:
- * - Unprocessed record
- E - Estimated
- I - Incomplete data
- M - Instrument malfunction
- N - No data available
- Q - Questionable
- T - Trace, unmeasurable amount of rain
-) - Include in the following total

P R E C I P I T A T I O N

DAILY PRECIPITATION SUMMARY

Gage Type: *Standard 8 inch diameter (DPW)*

223C Big Dalton Dam

Water Year from 10/1/2000 to 9/30/2001

Latitude: 34-10-06 Longitude: 117-48-36 Elevation: 1587 Feet Observation Time: 0800

Day	Oct	Nov	Dec	Jan	Feb	Mar	Apr	May	Jun	Jul	Aug	Sep
1						0.08						
2							0.08		T			
3									0.12			
4	0.01						0.01		0.01			
5						0.03			T			
6	T	T		0.01		0.66				0.06		
7	0.06				0.27	0.07	0.76					
8					0.02	0.03	0.75					
9			0.01	0.16		0.04						
10	T	T			0.02	0.52	0.22					
11	0.04	0.35		3.70	0.33	0.01	0.01					
12	0.05	0.03	0.04	0.45	1.30	T	0.05		T			
13			0.01	0.03	2.93							
14					0.62			0.01				
15				0.01								
16				0.03								
17												
18					0.01							
19					0.02							
20					0.30		0.01	0.04				
21	T						1.11					
22	0.04											
23					0.04							
24				0.11	0.27							
25				0.41	0.95							
26	0.30			0.04	1.46	T						
27	0.62			0.25	0.11			0.09				
28	0.15			0.01	0.67			0.12				
29				0.04		0.01		0.01				
30	0.73			T								
31												
Totals	**2.00**	**0.38**	**0.06**	**5.25**	**9.32**	**1.45**	**3.00**	**0.27**	**0.13**	**0.06**	**0.00**	**0.00**

Water Year Total: **21.92**

NOTE: All values are in terms of inches, unless otherwise specified.

LEGEND:
- * - Unprocessed record
- E - Estimated
- I - Incomplete data
- M - Instrument malfunction
- N - No data available
- Q - Questionable
- T - Trace, unmeasurable amount of rain
-) - Include in the following total

P R E C I P I T A T I O N

DAILY PRECIPITATION SUMMARY

Gage Type: *Standard 8 inch diameter (DPW)*

225 Montana Ranch-Lakewood

Water Year from 10/1/2000 to 9/30/2001

Latitude: 33-50-35 Longitude: 118-07-09 Elevation: 47 Feet Observation Time: 0700

Day	Oct	Nov	Dec	Jan	Feb	Mar	Apr	May	Jun	Jul	Aug	Sep
1												
2												
3												
4												
5						0.60						
6						0.05	0.52					
7							0.07					
8				0.65								
9	0.02					0.05	0.10					
10	0.23			2.60	0.35							
11	0.10			0.48	0.13							
12				0.23	2.10							
13					0.45							
14												
15												
16												
17												
18												
19					0.28							
20							0.20					
21												
22					0.05							
23				0.25	0.34							
24					1.50							
25				0.23	1.63							
26	2.20			0.67	0.25							
27					0.54							
28					0.30							
29	0.45											
30												
31												
Totals	**3.00**	**0.00**	**0.00**	**5.11**	**7.92**	**0.70**	**0.89**	**0.00**	**0.00**	**0.00**	**0.00**	**0.00**

Water Year Total: **17.62**

NOTE: All values are in terms of inches, unless otherwise specified.

LEGEND:
- * - Unprocessed record
- E - Estimated
- I - Incomplete data
- M - Instrument malfunction
- N - No data available
- Q - Questionable
- T - Trace, unmeasurable amount of rain
-) - Include in the following total

P R E C I P I T A T I O N

DAILY PRECIPITATION SUMMARY

Gage Type: *Standard 8 inch diameter (DPW)*

227D San Gabriel-Bruington-Orton

Water Year from 10/1/2000 to 9/30/2001

Latitude: 34-06-18 Longitude: 118-06-32 Elevation: 472 Feet Observation Time: 1700

Day	Oct	Nov	Dec	Jan	Feb	Mar	Apr	May	Jun	Jul	Aug	Sep
1												
2							0.04					
3												
4							0.01					
5						0.08						
6						0.44	1.16					
7					0.23							
8				0.06								
9												
10				0.50	0.27							
11	0.04			3.63	0.03	0.06						
12				0.24	1.71							
13					2.07							
14					0.17							
15												
16												
17												
18												
19					0.13							
20												
21					0.11		0.67					
22												
23					0.12							
24				0.46	0.46							
25					1.12							
26	0.11			0.38	1.43							
27	0.43				0.27							
28					0.42							
29	0.45											
30	0.28											
31	0.01											
Totals	**1.32**	**0.00**	**0.00**	**5.27**	**8.54**	**0.58**	**1.88**	**0.00**	**0.00**	**0.00**	**0.00**	**0.00**

Water Year Total: **17.59**

NOTE: All values are in terms of inches, unless otherwise specified.

LEGEND:
- * - Unprocessed record
- E - Estimated
- I - Incomplete data
- M - Instrument malfunction
- N - No data available
- Q - Questionable
- T - Trace, unmeasurable amount of rain
-) - Include in the following total

P R E C I P I T A T I O N

DAILY PRECIPITATION SUMMARY

Gage Type: *Standard 8 inch diameter (DPW)*

228C Beverly Hills City Hall

Water Year from 10/1/2000 to 9/30/2001

Latitude: 34-06-00 Longitude: 118-23-40 Elevation: 245 Feet Observation Time: 0800

Day	Oct	Nov	Dec	Jan	Feb	Mar	Apr	May	Jun	Jul	Aug	Sep
1												
2												
3												
4						0.30						
5				T		1.27						
6												
7							1.15					
8				0.15		T						
9					)							
10				4.61	)							
11				0.60	2.60							
12				0.24	2.01							
13					0.93							
14												
15												
16												
17												
18												
19					0.81							
20							0.37					
21												
22					)							
23				0.39	)							
24				0.11	)							
25				0.27	2.80							
26				0.29	0.17							
27					0.16							
28					0.13							
29												
30												
31												
Totals	**0.00**	**0.00**	**0.00**	**6.66**	**9.61**	**1.57**	**1.52**	**0.00**	**0.00**	**0.00**	**0.00**	**0.00**

Water Year Total: **19.36**

NOTE: All values are in terms of inches, unless otherwise specified.

LEGEND:
- * - Unprocessed record
- E - Estimated
- I - Incomplete data
- M - Instrument malfunction
- N - No data available
- Q - Questionable
- T - Trace, unmeasurable amount of rain
-) - Include in the following total

P R E C I P I T A T I O N

DAILY PRECIPITATION SUMMARY

Gage Type: *Standard 8 inch diameter (DPW)*

235C Henniger Flats

Water Year from 10/1/2000 to 9/30/2001

Latitude: 34-11-38 Longitude: 118-05-17 Elevation: 2550 Feet Observation Time: 1700

Day	Oct	Nov	Dec	Jan	Feb	Mar	Apr	May	Jun	Jul	Aug	Sep
1					0.16	0.08						
2							0.36		0.05			
3							0.01		0.12			
4							0.01					
5						0.54				0.07		
6		0.01				1.04	0.01			0.05		
7				0.02		0.01	1.12					
8			0.04	0.07		0.01						
9						0.20						
10				0.44	0.28	0.51	0.02					
11				3.02	0.16	0.01	0.02					
12		0.09	0.02	0.14	1.42		0.03					
13				0.01	2.79							
14				0.01	0.19							
15												
16				0.01								
17												
18			0.01		0.05							
19					0.08							
20					0.16							
21							0.88					
22						0.01						
23					0.05							
24				0.43	0.48							
25					1.37							
26				0.30	0.83	0.03						
27	1.00				0.50							
28				0.01	0.30		0.01					
29	0.39											
30												
31												
Totals	**1.39**	**0.10**	**0.07**	**4.46**	**8.82**	**2.44**	**2.47**	**0.00**	**0.17**	**0.12**	**0.00**	**0.00**

Water Year Total: **20.04**

NOTE: All values are in terms of inches, unless otherwise specified.

LEGEND:
- * - Unprocessed record
- E - Estimated
- I - Incomplete data
- M - Instrument malfunction
- N - No data available
- Q - Questionable
- T - Trace, unmeasurable amount of rain
-) - Include in the following total

P R E C I P I T A T I O N

DAILY PRECIPITATION SUMMARY

Gage Type: *Standard 8 inch diameter*

237C Stone Canyon Reservoir

Water Year from 10/1/2000 to 9/30/2001

Latitude: 34-06-21 Longitude: 118-27-13 Elevation: 865 Feet Observation Time: 0700

Day	Oct	Nov	Dec	Jan	Feb	Mar	Apr	May	Jun	Jul	Aug	Sep
1						0.25						
2												
3												
4												
5						0.60						
6				M		1.79			0.02			
7						0.02	1.50					
8					0.04		0.04					
9				0.19		0.04						
10					0.78							
11				6.17	0.03							
12				1.04	2.52							
13	0.04			0.13	3.08							
14					0.33							
15												
16												
17												
18					0.07							
19												
20					0.87							
21							0.66					
22												
23					0.08							
24				0.45	0.05							
25					0.72							
26				0.36	2.76							
27	0.09			0.30	0.10							
28	0.85				0.29							
29												
30												
31	0.71											
Totals	**1.69**	**0.00**	**0.00**	**8.64**	**11.72**	**2.70**	**2.20**	**0.00**	**0.02**	**0.00**	**0.00**	**0.00**

Water Year Total: **26.97**

NOTE: All values are in terms of inches, unless otherwise specified.

LEGEND:
- * - Unprocessed record
- E - Estimated
- I - Incomplete data
- M - Instrument malfunction
- N - No data available
- Q - Questionable
- T - Trace, unmeasurable amount of rain
-) - Include in the following total

P R E C I P I T A T I O N

DAILY PRECIPITATION SUMMARY

Gage Type: *Standard 8 inch diameter*

238 Hollywood Dam

Water Year from 10/1/2000 to 9/30/2001

Latitude: 34-07-04 Longitude: 118-19-55 Elevation: 750 Feet Observation Time: 0700

Day	Oct	Nov	Dec	Jan	Feb	Mar	Apr	May	Jun	Jul	Aug	Sep
1						0.16						
2												
3						0.02						
4												
5	0.03					0.30						
6						1.29						
7					0.05	0.02	1.02					
8			0.01				0.25					
9				0.15								
10					0.48							
11				2.85	0.08							
12				0.53	1.95							
13	0.04			0.16	2.31							
14					0.65							
15												
16												
17												
18												
19												
20					0.45							
21							0.42					
22												
23					0.12							
24				0.38	0.07							
25				0.19	0.54							
26				0.28	2.42							
27	0.20			0.20	0.10							
28	0.60				0.23							
29	0.01											
30												
31	0.86											
Totals	**1.74**	**0.00**	**0.01**	**4.74**	**9.45**	**1.79**	**1.69**	**0.00**	**0.00**	**0.00**	**0.00**	**0.00**

Water Year Total: **19.42**

NOTE: All values are in terms of inches, unless otherwise specified.

LEGEND:
- * - Unprocessed record
- E - Estimated
- I - Incomplete data
- M - Instrument malfunction
- N - No data available
- Q - Questionable
- T - Trace, unmeasurable amount of rain
-) - Include in the following total

P R E C I P I T A T I O N

DAILY PRECIPITATION SUMMARY

Gage Type: *Automatic recording gage (DPW)*

250D Acton Camp

Water Year from 10/1/2000 to 9/30/2001

Latitude: 34-27-02 Longitude: 118-11-55 Elevation: 2625 Feet Observation Time: 2400

Day	Oct	Nov	Dec	Jan	Feb	Mar	Apr	May	Jun	Jul	Aug	Sep
1												
2												
3												
4						0.04						
5						0.12						
6						0.40						
7						0.20	0.32					
8				0.04								
9				0.04		0.12	0.08					
10		0.08		0.94	0.08							
11				0.95	0.04							
12					1.40							
13					1.68							
14					0.04							
15												
16												
17												
18												
19												
20							0.08					
21							0.16					
22												
23					0.04							
24				0.11								
25					0.52							
26	0.04			0.24	0.24							
27	0.04			0.04	0.36							
28					0.04							
29	0.04											
30												
31												
Totals	**0.12**	**0.08**	**0.00**	**2.36**	**4.44**	**0.88**	**0.64**	**0.00**	**0.00**	**0.00**	**0.00**	**0.00**

Water Year Total: **8.52**

NOTE: All values are in terms of inches, unless otherwise specified.

LEGEND:
- * - Unprocessed record
- E - Estimated
- I - Incomplete data
- M - Instrument malfunction
- N - No data available
- Q - Questionable
- T - Trace, unmeasurable amount of rain
-) - Include in the following total

P R E C I P I T A T I O N

DAILY PRECIPITATION SUMMARY

Gage Type: *Standard 8 inch diameter (DPW)*

251C La Crescenta

Water Year from 10/1/2000 to 9/30/2001

Latitude: 34-13-20 Longitude: 118-14-40 Elevation: 1440 Feet Observation Time: 1700

Day	Oct	Nov	Dec	Jan	Feb	Mar	Apr	May	Jun	Jul	Aug	Sep
1						T	0.09					
2												
3							T					
4	0.01					0.48	0.02			0.02		
5						0.08				0.02		
6	T			0.04		0.94						
7					0.07	0.01	1.40					
8			0.02	0.13								
9						0.09				0.13		
10	0.01			0.25			T					
11	0.01			2.47	2.89	0.36	T					
12			T	0.46	0.44							
13				0.01	2.66							
14					0.28							
15				T								
16												
17												
18												
19					0.45							
20												
21	T						0.92					
22												
23					0.11							
24				0.52								
25					2.26							
26	0.20			0.29	0.02							
27	0.38			0.11	0.27							
28					0.25							
29	1.09											
30	T											
31												
Totals	**1.70**	**0.00**	**0.02**	**4.28**	**9.70**	**1.96**	**2.43**	**0.00**	**0.00**	**0.17**	**0.00**	**0.00**

Water Year Total: **20.26**

NOTE: All values are in terms of inches, unless otherwise specified.

LEGEND:
- * - Unprocessed record
- E - Estimated
- I - Incomplete data
- M - Instrument malfunction
- N - No data available
- Q - Questionable
- T - Trace, unmeasurable amount of rain
-) - Include in the following total

P R E C I P I T A T I O N

DAILY PRECIPITATION SUMMARY

Gage Type: *Standard 8 inch diameter*

252C Castaic Dam

Water Year from 10/1/2000 to 9/30/2001

Latitude: 34-29-53 Longitude: 118-36-53 Elevation: 1150 Feet Observation Time: 0800

Day	Oct	Nov	Dec	Jan	Feb	Mar	Apr	May	Jun	Jul	Aug	Sep
1						0.23						
2												
3												
4	0.02											
5						0.42						
6						1.40						
7						0.20						
8												
9				0.08		T						
10				T	0.50	0.12						
11	0.02	0.06		2.20	0.12	0.02						
12				0.66	1.97							
13					2.42			T				
14				0.02	0.07							
15												
16												
17												
18					0.03							
19					0.01							
20					0.39							
21												
22						0.01						
23					T							
24				0.35	T							
25				0.04	0.71							
26	0.15			0.50	1.67							
27	0.10			0.09	0.05							
28					0.27							
29	0.01											
30	0.93											
31	0.02											
Totals	**1.25**	**0.06**	**0.00**	**3.94**	**8.21**	**2.40**	**0.00**	**0.00**	**0.00**	**0.00**	**0.00**	**0.00**

Water Year Total: **15.86**

NOTE: All values are in terms of inches, unless otherwise specified.

LEGEND:
- * - Unprocessed record
- E - Estimated
- I - Incomplete data
- M - Instrument malfunction
- N - No data available
- Q - Questionable
- T - Trace, unmeasurable amount of rain
-) - Include in the following total

P R E C I P I T A T I O N

DAILY PRECIPITATION SUMMARY

Gage Type: *Standard 8 inch diameter (DPW)*

255F Mount San Antonio College-Spadra

Water Year from 10/1/2000 to 9/30/2001

Latitude: 34-02-41 Longitude: 117-50-19 Elevation: 720 Feet Observation Time: 0700

Day	Oct	Nov	Dec	Jan	Feb	Mar	Apr	May	Jun	Jul	Aug	Sep
1												
2												
3												
4							0.02					
5												
6						0.49						
7						0.08	0.71					
8												
9												
10						0.41						
11				2.37	1.75							
12				0.05	1.02							
13					2.03							
14					0.04							
15												
16				0.12								
17												
18												
19												
20					0.25							
21							0.55					
22												
23					0.22							
24				0.45								
25					)							
26					1.98)							
27	1.00				0.14							
28					0.45							
29	0.42											
30												
31												
Totals	**1.42**	**0.00**	**0.00**	**2.99**	**7.88**	**0.98**	**1.28**	**0.00**	**0.00**	**0.00**	**0.00**	**0.00**

Water Year Total: **14.55**

NOTE: All values are in terms of inches, unless otherwise specified.

LEGEND:
- * - Unprocessed record
- E - Estimated
- I - Incomplete data
- M - Instrument malfunction
- N - No data available
- Q - Questionable
- T - Trace, unmeasurable amount of rain
-) - Include in the following total

P R E C I P I T A T I O N

DAILY PRECIPITATION SUMMARY

Gage Type: *Automatic recording gage (DPW)*

261F Acton-Escondido Canyon

Water Year from 10/1/2000 to 9/30/2001

Latitude: 34-29-42 Longitude: 118-16-22 Elevation: 2960 Feet Observation Time: 2400

Day	Oct	Nov	Dec	Jan	Feb	Mar	Apr	May	Jun	Jul	Aug	Sep
1												
2												
3												
4												
5						0.24						
6						0.84				0.08		
7						0.08	0.36					
8				0.08		0.12						
9				0.04		0.36	0.04					
10		0.12		0.71	0.12	0.04						
11		0.04		1.14	0.16							
12				0.04	1.36	0.04	0.04					
13					2.08							
14												
15												
16												
17												
18					0.08							
19												
20							0.08					
21							0.20					
22												
23					0.04							
24				0.47	0.04							
25					0.84							
26	0.04			0.04	0.20							
27	0.16			0.04	0.40							
28					0.04							
29	0.19											
30												
31												
Totals	**0.39**	**0.16**	**0.00**	**2.56**	**5.36**	**1.72**	**0.72**	**0.00**	**0.00**	**0.08**	**0.00**	**0.00**

Water Year Total: **10.99**

NOTE: All values are in terms of inches, unless otherwise specified.

LEGEND:
- * - Unprocessed record
- E - Estimated
- I - Incomplete data
- M - Instrument malfunction
- N - No data available
- Q - Questionable
- T - Trace, unmeasurable amount of rain
-) - Include in the following total

P R E C I P I T A T I O N

DAILY PRECIPITATION SUMMARY

Gage Type: *Standard 8 inch diameter*

269D Diamond Bar Fire Station

Water Year from 10/1/2000 to 9/30/2001

Latitude: 33-59-50 Longitude: 117-48-55 Elevation: 870 Feet Observation Time: 1700

Day	Oct	Nov	Dec	Jan	Feb	Mar	Apr	May	Jun	Jul	Aug	Sep
1												
2												
3									0.05			
4							0.02					
5												
6				0.02		0.51						
7						0.01	0.69					
8				0.12								
9				0.01			0.04					
10				0.18	0.26	0.34						
11				3.11	0.01							
12	0.02		0.01	0.09	2.61							
13				0.01	1.67							
14					0.05							
15				0.02								
16												
17												
18					0.01							
19					0.08							
20					0.26							
21							0.45					
22												
23					0.22							
24				0.49	0.37							
25					0.70							
26				0.44	0.99							
27	0.72				0.42			0.05				
28					0.29							
29												
30	0.36											
31												
Totals	**1.10**	**0.00**	**0.01**	**4.49**	**7.94**	**0.86**	**1.20**	**0.05**	**0.05**	**0.00**	**0.00**	**0.00**

Water Year Total: **15.70**

NOTE: All values are in terms of inches, unless otherwise specified.

LEGEND:
- * - Unprocessed record
- E - Estimated
- I - Incomplete data
- M - Instrument malfunction
- N - No data available
- Q - Questionable
- T - Trace, unmeasurable amount of rain
-) - Include in the following total

P R E C I P I T A T I O N

DAILY PRECIPITATION SUMMARY

Gage Type: *Standard 8 inch diameter (DPW)*

277 Sawmill Mountain

Water Year from 10/1/2000 to 9/30/2001

Latitude: 34-43-15 Longitude: 118-35-00 Elevation: 3700 Feet Observation Time: 0800

Day	Oct	Nov	Dec	Jan	Feb	Mar	Apr	May	Jun	Jul	Aug	Sep
1						0.08						
2												
3												
4							0.05					
5						2.03						
6						1.20						
7					0.02	0.30	1.56					
8							0.10					
9												
10				5.38		0.30						
11	0.02	0.05										
12						0.12						
13												
14												
15												
16					5.55							
17												
18												
19					0.99		1.03					
20												
21												
22												
23												
24				0.70								
25												
26	0.10			0.32	2.81							
27	0.16				0.05							
28					0.15							
29	0.24											
30	0.44											
31												
Totals	**0.96**	**0.05**	**0.00**	**6.40**	**9.57**	**4.03**	**2.74**	**0.00**	**0.00**	**0.00**	**0.00**	**0.00**

Water Year Total: **23.75**

NOTE: All values are in terms of inches, unless otherwise specified.

LEGEND:
- * - Unprocessed record
- E - Estimated
- I - Incomplete data
- M - Instrument malfunction
- N - No data available
- Q - Questionable
- T - Trace, unmeasurable amount of rain
-) - Include in the following total

P R E C I P I T A T I O N

DAILY PRECIPITATION SUMMARY

Gage Type: *Automatic recording gage (DPW)*

280C Flintridge-Sacred Heart

Water Year from 10/1/2000 to 9/30/2001

Latitude: 34-10-54 Longitude: 118-11-08 Elevation: 1600 Feet Observation Time: 2400

Day	Oct	Nov	Dec	Jan	Feb	Mar	Apr	May	Jun	Jul	Aug	Sep
1							0.04					
2							0.04					
3												
4						0.36	0.04					
5						0.08						
6						0.76				0.04		
7							1.44					
8				0.12								
9						0.32						
10				2.01	0.36							
11	0.04			2.04	0.44							
12				0.20	2.52							
13					1.76							
14					0.32							
15												
16												
17												
18												
19					0.32							
20							0.64					
21							0.16					
22												
23					0.16							
24				0.47	0.56							
25					1.52							
26	0.35			0.12	0.28							
27	0.20			0.04	0.36							
28					0.24							
29	0.75											
30												
31												
Totals	**1.34**	**0.00**	**0.00**	**5.00**	**8.84**	**1.52**	**2.36**	**0.00**	**0.00**	**0.04**	**0.00**	**0.00**

Water Year Total: **19.10**

NOTE: All values are in terms of inches, unless otherwise specified.

LEGEND:
- * - Unprocessed record
- E - Estimated
- I - Incomplete data
- M - Instrument malfunction
- N - No data available
- Q - Questionable
- T - Trace, unmeasurable amount of rain
-) - Include in the following total

P R E C I P I T A T I O N

DAILY PRECIPITATION SUMMARY

Gage Type: *Automatic recording gage (DPW)*

283C Crystal Lake-East Pine Flat

Water Year from 10/1/2000 to 9/30/2001

Latitude: 34-19-02 Longitude: 117-50-28 Elevation: 5370 Feet Observation Time: 2400

Day	Oct	Nov	Dec	Jan	Feb	Mar	Apr	May	Jun	Jul	Aug	Sep
1					0.20	0.56						
2						0.48						
3						0.44						
4						0.40						
5				0.24		0.08				0.08		
6						1.96						
7						0.44						
8					0.36							
9				0.24		0.08						
10	0.28			0.44		0.28						
11	0.08			0.32		0.04						
12												
13				0.28								
14				0.24								
15				0.04	0.40							
16				0.04	0.76							
17				0.12	0.64							
18				0.56	0.52							
19				0.60	0.96							
20				0.44								
21												
22												
23												
24												
25				0.12	0.36							
26	0.44				0.72							
27	0.44			0.04	0.40							
28				0.20	0.04							
29	1.24			0.12								
30				0.24								
31				0.16								
Totals	**2.48**	**0.00**	**0.00**	**4.44**	**5.36**	**4.76**	**0.00**	**0.00**	**0.00**	**0.08**	**0.00**	**0.00**

Water Year Total: **17.12**

NOTE: All values are in terms of inches, unless otherwise specified.

LEGEND:
- * - Unprocessed record
- E - Estimated
- I - Incomplete data
- M - Instrument malfunction
- N - No data available
- Q - Questionable
- T - Trace, unmeasurable amount of rain
-) - Include in the following total

P R E C I P I T A T I O N

DAILY PRECIPITATION SUMMARY

Gage Type: *8.81 inch diameter (DPW)*

287B Glendora-City Hall

Water Year from 10/1/2000 to 9/30/2001

Latitude: 34-08-09 Longitude: 117-51-52 Elevation: 785 Feet Observation Time: 0800

Day	Oct	Nov	Dec	Jan	Feb	Mar	Apr	May	Jun	Jul	Aug	Sep
1						0.02						
2							0.08	T	0.14			
3								T	T			
4	T					T	0.03					
5						0.04						
6	T			T		0.78				0.08		
7					0.12	0.03	0.72					
8			T		0.03	0.01	0.43					
9				0.12		0.03	0.06					
10					0.06	0.48	0.20					
11	0.03		0.04	3.15	0.34							
12	0.06			0.44	1.55	0.05	T					
13				0.01	2.48							
14					0.42							
15												
16				0.03								
17												
18												
19					T							
20					0.20			T				
21							0.99					
22												
23					0.07							
24				0.20	0.25							
25				0.23	0.80							
26	0.26			0.02	1.24							
27	0.90			0.19	0.04			0.20				
28					0.63							
29						0.01						
30	0.65											
31												
Totals	**1.90**	**0.00**	**0.04**	**4.39**	**8.23**	**1.45**	**2.51**	**0.20**	**0.14**	**0.08**	**0.00**	**0.00**

Water Year Total: **18.94**

NOTE: All values are in terms of inches, unless otherwise specified.

LEGEND:
- * - Unprocessed record
- E - Estimated
- I - Incomplete data
- M - Instrument malfunction
- N - No data available
- Q - Questionable
- T - Trace, unmeasurable amount of rain
-) - Include in the following total

P R E C I P I T A T I O N

DAILY PRECIPITATION SUMMARY

Gage Type: *Automatic recording gage (DPW)*

291 Los Angeles-96th and Central

Water Year from 10/1/2000 to 9/30/2001

Latitude: 33-56-56 Longitude: 118-15-17 Elevation: 121 Feet Observation Time: 2400

Day	Oct	Nov	Dec	Jan	Feb	Mar	Apr	May	Jun	Jul	Aug	Sep
1												
2												
3												
4						0.04						
5						0.40						
6						0.32						
7							0.64					
8				0.23								
9												
10				1.34	0.04							
11	0.04			1.02	0.08							
12				0.32	1.56							
13					0.76							
14					0.28							
15												
16												
17												
18												
19					0.48							
20							0.12					
21							0.16					
22												
23					0.16							
24				0.31	0.20							
25					1.64							
26	0.16			0.08	0.40							
27	0.23				0.16							
28					0.16							
29	0.48											
30												
31												
Totals	**0.91**	**0.00**	**0.00**	**3.30**	**5.92**	**0.76**	**0.92**	**0.00**	**0.00**	**0.00**	**0.00**	**0.00**

Water Year Total: **11.81**

NOTE: All values are in terms of inches, unless otherwise specified.

LEGEND:
- * - Unprocessed record
- E - Estimated
- I - Incomplete data
- M - Instrument malfunction
- N - No data available
- Q - Questionable
- T - Trace, unmeasurable amount of rain
-) - Include in the following total

P R E C I P I T A T I O N

DAILY PRECIPITATION SUMMARY

Gage Type: *Standard 8 inch diameter (DPW)*

292D Encino Reservoir

Water Year from 10/1/2000 to 9/30/2001

Latitude: 34-08-56 Longitude: 118-30-57 Elevation: 1075 Feet Observation Time: 0700

Day	Oct	Nov	Dec	Jan	Feb	Mar	Apr	May	Jun	Jul	Aug	Sep
1						0.41						
2												
3												
4												
5						0.97						
6				0.03		2.20						
7	0.01						0.67			0.05		
8	0.01		0.04		0.03	0.03	0.01					
9				0.22								
10					0.60							
11				6.25	0.01							
12				0.82	2.03							
13				0.08	2.00							
14					0.25							
15												
16												
17												
18					0.04							
19					0.02							
20					0.53							
21							0.55					
22												
23					0.02							
24				0.30	0.03							
25				0.05	1.00							
26				0.35	2.81							
27	0.02			0.29	0.05							
28	2.30				0.22							
29												
30												
31	0.30											
Totals	**2.64**	**0.00**	**0.04**	**8.39**	**9.64**	**3.61**	**1.23**	**0.00**	**0.00**	**0.05**	**0.00**	**0.00**

Water Year Total: **25.60**

NOTE: All values are in terms of inches, unless otherwise specified.

LEGEND:
- * - Unprocessed record
- E - Estimated
- I - Incomplete data
- M - Instrument malfunction
- N - No data available
- Q - Questionable
- T - Trace, unmeasurable amount of rain
-) - Include in the following total

P R E C I P I T A T I O N

DAILY PRECIPITATION SUMMARY

Gage Type: *Standard 8 inch diameter*

293B Los Angeles Reservoir

Water Year from 10/1/2000 to 9/30/2001

Latitude: 34-17-18 Longitude: 118-28-54 Elevation: 1150 Feet Observation Time: 0700

Day	Oct	Nov	Dec	Jan	Feb	Mar	Apr	May	Jun	Jul	Aug	Sep
1						0.06						
2												
3												
4												
5						0.60						
6						1.77				0.01		
7							1.10					
8			0.02				0.24					
9				0.12		0.04						
10					0.31	0.14	0.04					
11				3.48	0.27							
12				0.61	1.87							
13	0.03			0.01	2.01							
14					0.27							
15												
16												
17												
18												
19					0.04							
20	0.06				0.10							
21							0.75					
22												
23					0.04							
24				0.57								
25				0.02	0.67							
26				0.32	2.75							
27	0.05			0.22	0.12							
28	1.26			0.01	0.32							
29												
30												
31	0.78											
Totals	**2.18**	**0.00**	**0.02**	**5.36**	**8.77**	**2.61**	**2.13**	**0.00**	**0.00**	**0.01**	**0.00**	**0.00**

Water Year Total: **21.08**

NOTE: All values are in terms of inches, unless otherwise specified.

LEGEND:
- * - Unprocessed record
- E - Estimated
- I - Incomplete data
- M - Instrument malfunction
- N - No data available
- Q - Questionable
- T - Trace, unmeasurable amount of rain
-) - Include in the following total

P R E C I P I T A T I O N

DAILY PRECIPITATION SUMMARY

Gage Type: *Standard 8 inch diameter*

294B Sierra Madre-Mira Monte Pumping Plant

Water Year from 10/1/2000 to 9/30/2001

Latitude: 34-10-11 Longitude: 118-02-51 Elevation: 985 Feet Observation Time: 0700

Day	Oct	Nov	Dec	Jan	Feb	Mar	Apr	May	Jun	Jul	Aug	Sep
1						0.11						
2							0.26					
3									0.08			
4												
5						0.21						
6						0.71				0.10		
7					0.27	0.12	0.63					
8					0.05		0.68					
9				0.05		0.10						
10					0.08	0.76						
11				3.75								
12		0.05		0.90	1.73							
13				0.06	3.02							
14					0.61							
15												
16				0.03								
17												
18												
19	0.06				0.04							
20					0.22							
21							0.72					
22	0.09											
23					0.04							
24				0.30								
25				0.28	0.94							
26	0.19			0.03	1.97	0.02						
27	0.30			0.29	0.09			0.05				
28				0.02	0.61			0.11				
29	0.74											
30												
31												
Totals	**1.38**	**0.05**	**0.00**	**5.71**	**9.67**	**2.03**	**2.29**	**0.16**	**0.08**	**0.10**	**0.00**	**0.00**

Water Year Total: **21.47**

NOTE: All values are in terms of inches, unless otherwise specified.

LEGEND:
- * - Unprocessed record
- E - Estimated
- I - Incomplete data
- M - Instrument malfunction
- N - No data available
- Q - Questionable
- T - Trace, unmeasurable amount of rain
-) - Include in the following total

P R E C I P I T A T I O N

DAILY PRECIPITATION SUMMARY

Gage Type: *Automatic recording gage (DPW)*

298C Gorman - Sheriff

Water Year from 10/1/2000 to 9/30/2001

Latitude: 34-47-47 Longitude: 118-51-27 Elevation: 3835 Feet Observation Time: 2400

Day	Oct	Nov	Dec	Jan	Feb	Mar	Apr	May	Jun	Jul	Aug	Sep
1												
2												
3												
4												
5												
6												
7												
8												
9							0.12					
10												
11							0.04					
12												
13												
14												
15												
16												
17												
18												
19							0.08					
20							0.04					
21												
22												
23												
24												
25												
26												
27												
28												
29												
30												
31												
Totals	**0.00**	**0.00**	**0.00**	**0.00**	**0.00**	**0.00**	**0.28**	**0.00**	**0.00**	**0.00**	**0.00**	**0.00**

Water Year Total: **0.28**

NOTE: All values are in terms of inches, unless otherwise specified.

LEGEND:
- * - Unprocessed record
- E - Estimated
- I - Incomplete data
- M - Instrument malfunction
- N - No data available
- Q - Questionable
- T - Trace, unmeasurable amount of rain
-) - Include in the following total

P R E C I P I T A T I O N

DAILY PRECIPITATION SUMMARY

Gage Type: *Standard 8 inch diameter (DPW)*

299F Little Rock - Schwab

Water Year from 10/1/2000 to 9/30/2001

Latitude: 34-32-12 Longitude: 117-58-43 Elevation: 2800 Feet Observation Time: 1700

Day	Oct	Nov	Dec	Jan	Feb	Mar	Apr	May	Jun	Jul	Aug	Sep
1										T		
2										0.20		
3												
4												
5										0.10		
6						0.33				0.16		
7						0.17	0.02			0.01		
8				0.05			0.01					
9				0.21			0.07					
10		0.08			0.05	0.15						
11				1.40		T						
12					0.39							
13					1.71							
14												
15												
16				0.09			0.30					
17												
18					T							
19												
20												
21												
22	T											
23												
24				0.11	T							
25					0.22							
26				0.12	0.23							
27	0.01			0.32	0.37							
28				0.02	0.20							
29												
30	0.12											
31												
Totals	**0.13**	**0.08**	**0.00**	**2.32**	**3.17**	**0.65**	**0.40**	**0.00**	**0.00**	**0.47**	**0.00**	**0.00**

Water Year Total: **7.22**

NOTE: All values are in terms of inches, unless otherwise specified.

LEGEND:
- * - Unprocessed record
- E - Estimated
- I - Incomplete data
- M - Instrument malfunction
- N - No data available
- Q - Questionable
- T - Trace, unmeasurable amount of rain
-) - Include in the following total

P R E C I P I T A T I O N

DAILY PRECIPITATION SUMMARY

Gage Type: *Standard 8 inch diameter (DPW)*

306H Zuma Beach

Water Year from 10/1/2000 to 9/30/2001

Latitude: 34-01-15 Longitude: 118-49-42 Elevation: 15 Feet Observation Time: 1700

Day	Oct	Nov	Dec	Jan	Feb	Mar	Apr	May	Jun	Jul	Aug	Sep
1						0.21						
2												
3												
4						0.35						
5						1.60						
6												
7							0.61					
8				0.35								
9												
10				1.15	0.22							
11				1.80	0.10							
12				1.11	0.51							
13					1.04							
14												
15												
16												
17												
18					0.02							
19					0.34							
20												
21							0.25					
22												
23					0.12							
24					0.25							
25					0.65							
26				0.85	0.11			0.03				
27					0.18			0.05				
28					0.10							
29												
30												
31												
Totals	**0.00**	**0.00**	**0.00**	**5.26**	**3.64**	**2.16**	**0.86**	**0.08**	**0.00**	**0.00**	**0.00**	**0.00**

Water Year Total: **12.00**

NOTE: All values are in terms of inches, unless otherwise specified.

LEGEND:
- * - Unprocessed record
- E - Estimated
- I - Incomplete data
- M - Instrument malfunction
- N - No data available
- Q - Questionable
- T - Trace, unmeasurable amount of rain
-) - Include in the following total

P R E C I P I T A T I O N

DAILY PRECIPITATION SUMMARY

Gage Type: *Automatic recording gage (DPW)*

321 Pine Canyon Patrol Station

Water Year from 10/1/2000 to 9/30/2001

Latitude: 34-40-24 Longitude: 118-25-45 Elevation: 3286 Feet Observation Time: 2400

Day	Oct	Nov	Dec	Jan	Feb	Mar	Apr	May	Jun	Jul	Aug	Sep
1												
2												
3												
4						0.16						
5						0.20						
6						0.20						
7						0.16						
8												
9					0.08	0.16						
10					0.36							
11					1.04	0.04						
12					1.08							
13					0.52							
14					0.16							
15												
16												
17					0.04							
18												
19					0.40							
20												
21												
22												
23												
24					0.24							
25					0.88							
26					0.48							
27					0.24							
28												
29												
30												
31												
Totals	**0.00**	**0.00**	**0.00**	**0.00**	**5.52**	**0.92**	**0.00**	**0.00**	**0.00**	**0.00**	**0.00**	**0.00**

Water Year Total: **6.44**

NOTE: All values are in terms of inches, unless otherwise specified.

LEGEND:
- * - Unprocessed record
- E - Estimated
- I - Incomplete data
- M - Instrument malfunction
- N - No data available
- Q - Questionable
- T - Trace, unmeasurable amount of rain
-) - Include in the following total

P R E C I P I T A T I O N

DAILY PRECIPITATION SUMMARY

Gage Type: *Standard 8 inch diameter (DPW)*

322 Munz Valley Ranch

Water Year from 10/1/2000 to 9/30/2001

Latitude: 34-42-50 Longitude: 118-21-15 Elevation: 2600 Feet Observation Time: 0800

Day	Oct	Nov	Dec	Jan	Feb	Mar	Apr	May	Jun	Jul	Aug	Sep
1												
2												
3												
4												
5						0.09						
6						0.28						
7						0.20	0.87					
8				0.02								
9				0.05		0.05						
10				0.23	0.30	0.17						
11				1.28								
12				0.04	1.24							
13					1.79							
14												
15												
16												
17												
18												
19					0.17							
20												
21							0.35					
22												
23												
24				0.26	0.10							
25					0.22							
26				0.08	1.24							
27	0.08				0.31							
28												
29												
30	0.34											
31												
Totals	**0.42**	**0.00**	**0.00**	**1.96**	**5.37**	**0.79**	**1.22**	**0.00**	**0.00**	**0.00**	**0.00**	**0.00**

Water Year Total: **9.76**

NOTE: All values are in terms of inches, unless otherwise specified.

LEGEND:
- * - Unprocessed record
- E - Estimated
- I - Incomplete data
- M - Instrument malfunction
- N - No data available
- Q - Questionable
- T - Trace, unmeasurable amount of rain
-) - Include in the following total

P R E C I P I T A T I O N

DAILY PRECIPITATION SUMMARY

Gage Type: *Standard 8 inch diameter (DPW)*

334B Cogswell Dam

Water Year from 10/1/2000 to 9/30/2001

Latitude: 34-14-37 Longitude: 117-57-35 Elevation: 2300 Feet Observation Time: 0800

Day	Oct	Nov	Dec	Jan	Feb	Mar	Apr	May	Jun	Jul	Aug	Sep
1						0.14						
2												
3							0.01					
4							0.05					
5						0.42	0.01					
6	T			0.07		1.68				0.11		
7					0.21	1.11	1.05					
8						0.03	0.81					
9			0.02	0.10		0.01						
10	0.01				0.10	0.28	0.24					
11	0.03			5.51	0.29							
12	0.06	T	T	0.83	3.01		0.04					
13				0.07	5.15							
14					0.76							
15												
16												
17												
18					0.02							
19					0.04							
20					0.88							
21							1.39					
22							0.01					
23												
24				0.24	0.11							
25				0.30	1.53							
26	0.13			0.03	2.10							
27	0.42			0.35	0.11							
28	0.10			0.03	0.74			0.03				
29	0.02											
30	0.72											
31												
Totals	**1.49**	**0.00**	**0.02**	**7.53**	**15.05**	**3.67**	**3.61**	**0.03**	**0.00**	**0.11**	**0.00**	**0.00**

Water Year Total: **31.51**

NOTE: All values are in terms of inches, unless otherwise specified.

LEGEND:
- * - Unprocessed record
- E - Estimated
- I - Incomplete data
- M - Instrument malfunction
- N - No data available
- Q - Questionable
- T - Trace, unmeasurable amount of rain
-) - Include in the following total

P R E C I P I T A T I O N

DAILY PRECIPITATION SUMMARY

Gage Type: *Standard 8 inch diameter*

336 Silver Lake Reservoir

Water Year from 10/1/2000 to 9/30/2001

Latitude: 34-06-08 Longitude: 118-15-54 Elevation: 445 Feet Observation Time: 0700

Day	Oct	Nov	Dec	Jan	Feb	Mar	Apr	May	Jun	Jul	Aug	Sep
1						0.07						
2												
3						0.22						
4												
5						0.02						
6						0.89						
7					0.02	0.08	0.77					
8							0.26					
9				0.20								
10					0.31							
11				2.20		0.42						
12				0.70	1.30							
13				0.03	2.35							
14					0.60							
15			0.02									
16												
17												
18												
19												
20					0.36							
21							0.55					
22												
23					0.16							
24				0.26								
25				0.13	0.32							
26				0.30	2.41							
27	0.09			0.20	0.19							
28	0.34				0.22							
29												
30												
31	0.50											
Totals	**0.93**	**0.00**	**0.02**	**4.02**	**8.24**	**1.70**	**1.58**	**0.00**	**0.00**	**0.00**	**0.00**	**0.00**

Water Year Total: **16.49**

NOTE: All values are in terms of inches, unless otherwise specified.

LEGEND:
- * - Unprocessed record
- E - Estimated
- I - Incomplete data
- M - Instrument malfunction
- N - No data available
- Q - Questionable
- T - Trace, unmeasurable amount of rain
-) - Include in the following total

P R E C I P I T A T I O N

DAILY PRECIPITATION SUMMARY

Gage Type: *Standard 8 inch diameter*

338C Mt. Wilson-Observatory

Water Year from 10/1/2000 to 9/30/2001

Latitude: 34-14-07 Longitude: 118-04-28 Elevation: 5709 Feet Observation Time: 1500

Day	Oct	Nov	Dec	Jan	Feb	Mar	Apr	May	Jun	Jul	Aug	Sep
1												
2												
3												
4												
5												
6												
7												
8												
9												
10	0.13	0.01										
11	0.10											
12	T	0.05										
13												
14												
15												
16												
17												
18												
19												
20												
21												
22												
23												
24												
25												
26												
27	0.68											
28	T											
29	0.30											
30	0.78											
31												
Totals	**1.99**	**0.06**	**0.00**	**0.00**	**0.00**	**0.00**	**0.00**	**0.00**	**0.00**	**0.00**	**0.00**	**0.00**

Water Year Total: **2.05**

NOTE: All values are in terms of inches, unless otherwise specified.

LEGEND:
- * - Unprocessed record
- E - Estimated
- I - Incomplete data
- M - Instrument malfunction
- N - No data available
- Q - Questionable
- T - Trace, unmeasurable amount of rain
-) - Include in the following total

P R E C I P I T A T I O N

DAILY PRECIPITATION SUMMARY

Gage Type: *Standard 8 inch diameter (DPW)*

352B Lechuza Patrol Station

Water Year from 10/1/2000 to 9/30/2001

Latitude: 34-04-38 Longitude: 118-52-47 Elevation: 1620 Feet Observation Time: 1700

Day	Oct	Nov	Dec	Jan	Feb	Mar	Apr	May	Jun	Jul	Aug	Sep
1												
2												
3												
4												
5												
6												
7												
8												
9				0.40								
10												
11				3.50								
12				0.75								
13				0.04								
14												
15												
16												
17												
18												
19												
20												
21												
22												
23												
24				0.24								
25				0.60								
26				0.37								
27				0.27								
28												
29												
30												
31												
Totals	**0.00**	**0.00**	**0.00**	**6.17**	**0.00**	**0.00**	**0.00**	**0.00**	**0.00**	**0.00**	**0.00**	**0.00**

Water Year Total: **6.17**

NOTE: All values are in terms of inches, unless otherwise specified.

LEGEND:
- * - Unprocessed record
- E - Estimated
- I - Incomplete data
- M - Instrument malfunction
- N - No data available
- Q - Questionable
- T - Trace, unmeasurable amount of rain
-) - Include in the following total

P R E C I P I T A T I O N

DAILY PRECIPITATION SUMMARY

Gage Type: *Standard 8 inch diameter (DPW)*

356C Spadra-Lanterman Hospital

Water Year from 10/1/2000 to 9/30/2001

Latitude: 34-02-31 Longitude: 117-48-35 Elevation: 690 Feet Observation Time: 1600

Day	Oct	Nov	Dec	Jan	Feb	Mar	Apr	May	Jun	Jul	Aug	Sep
1												
2												
3												
4												
5										0.06		
6						0.53						
7					0.01	0.03	0.70					
8				0.04								
9				0.11			0.05					
10				2.71		0.26						
11	0.01			0.25	)							
12				0.05	)		0.01					
13					4.03)							
14					0.03							
15				)								
16				0.07)								
17												
18												
19					0.24							
20												
21							0.59					
22												
23					0.25							
24				0.40								
25					2.03							
26	T			0.35	0.01							
27	0.66				0.30							
28					0.35							
29	0.45											
30												
31												
Totals	**1.12**	**0.00**	**0.00**	**3.98**	**7.25**	**0.82**	**1.35**	**0.00**	**0.00**	**0.06**	**0.00**	**0.00**

Water Year Total: **14.58**

NOTE: All values are in terms of inches, unless otherwise specified.

LEGEND:
- * - Unprocessed record
- E - Estimated
- I - Incomplete data
- M - Instrument malfunction
- N - No data available
- Q - Questionable
- T - Trace, unmeasurable amount of rain
-) - Include in the following total

P R E C I P I T A T I O N

DAILY PRECIPITATION SUMMARY

Gage Type: *Standard 8 inch diameter*

372 San Francisquito Power House No.2

Water Year from 10/1/2000 to 9/30/2001

Latitude: 34-32-02 Longitude: 118-31-27 Elevation: 1580 Feet Observation Time: 0600

Day	Oct	Nov	Dec	Jan	Feb	Mar	Apr	May	Jun	Jul	Aug	Sep
1												
2												
3							T					
4						0.04						
5						0.75						
6						1.00				T		
7						0.18	0.37					
8				0.06			0.03					
9				0.02			0.04					
10	0.02	0.03		0.40	0.57	0.14						
11				1.75	0.18	0.04	0.05					
12					2.08		0.05					
13				0.44	2.53							
14				0.04	0.12							
15												
16												
17												
18												
19					0.40							
20												
21							0.47					
22												
23					T							
24				0.50	0.50							
25				0.02	0.80							
26	0.15			0.55	0.92							
27	0.08			0.02	0.10							
28					0.34							
29	0.51											
30	0.53											
31												
Totals	**1.29**	**0.03**	**0.00**	**3.80**	**8.54**	**2.15**	**1.01**	**0.00**	**0.00**	**0.00**	**0.00**	**0.00**

Water Year Total: **16.82**

NOTE: All values are in terms of inches, unless otherwise specified.

LEGEND:
- * - Unprocessed record
- E - Estimated
- I - Incomplete data
- M - Instrument malfunction
- N - No data available
- Q - Questionable
- T - Trace, unmeasurable amount of rain
-) - Include in the following total

P R E C I P I T A T I O N

DAILY PRECIPITATION SUMMARY

Gage Type: *Standard 8 inch diameter (DPW)*

373C Briggs Terrace

Water Year from 10/1/2000 to 9/30/2001

Latitude: 34-14-17 Longitude: 118-13-27 Elevation: 2200 Feet Observation Time: 1700

Day	Oct	Nov	Dec	Jan	Feb	Mar	Apr	May	Jun	Jul	Aug	Sep
1												
2							0.23					
3									0.06			
4							0.10					
5						0.88				0.04		
6				0.09	0.26	1.12						
7	0.05						1.68					
8				0.15								
9						0.82	0.02					
10	0.03			0.90	0.82							
11				3.35	0.18		0.01					
12				0.51	2.84							
13					0.53							
14								T				
15				0.07								
16												
17												
18					0.03							
19					0.57							
20												
21							1.13	T				
22												
23					0.17							
24				0.67	0.91							
25					0.86							
26	0.27			0.53								
27	0.46				0.95							
28	0.42				0.51							
29	0.94							0.05				
30												
31												
Totals	**2.17**	**0.00**	**0.00**	**6.27**	**8.63**	**2.82**	**3.17**	**0.05**	**0.06**	**0.04**	**0.00**	**0.00**

Water Year Total: **23.21**

NOTE: All values are in terms of inches, unless otherwise specified.

LEGEND:
- * - Unprocessed record
- E - Estimated
- I - Incomplete data
- M - Instrument malfunction
- N - No data available
- Q - Questionable
- T - Trace, unmeasurable amount of rain
-) - Include in the following total

P R E C I P I T A T I O N

DAILY PRECIPITATION SUMMARY

Gage Type: *Automatic recording gage (DPW)*

379B San Gabriel-East Fork

Water Year from 10/1/2000 to 9/30/2001

Latitude: 34-14-09 Longitude: 117-48-18 Elevation: 1600 Feet Observation Time: 2400

Day	Oct	Nov	Dec	Jan	Feb	Mar	Apr	May	Jun	Jul	Aug	Sep
1	0.04	0.04			0.04	0.04						
2	0.04	0.04					0.04					
3	0.04	0.04										
4					0.04							
5	0.04	0.04		0.04								
6						1.00						
7	0.04	0.04				0.04	1.16					
8				0.08	0.04							
9						0.48	0.76					
10	0.08			0.12			0.12					
11				0.68	0.04	0.04						
12				0.24	0.20							
13				0.08	0.12							
14				0.04								
15				0.04								
16				0.04	0.04							
17				0.04								
18				0.08								
19				0.04	0.04							
20				0.04			0.36					
21				0.04	0.04		0.60					
22												
23				0.04			0.04					
24				0.04	0.04							
25					0.08							
26	0.16			0.04								
27	0.12			0.04	0.12							
28	0.08											
29	0.04			0.04								
30	0.04											
31	0.04											
Totals	**0.76**	**0.20**	**0.00**	**1.80**	**0.84**	**1.60**	**3.08**	**0.00**	**0.00**	**0.00**	**0.00**	**0.00**

Water Year Total: **8.28**

NOTE: All values are in terms of inches, unless otherwise specified.

LEGEND:
- * - Unprocessed record
- E - Estimated
- I - Incomplete data
- M - Instrument malfunction
- N - No data available
- Q - Questionable
- T - Trace, unmeasurable amount of rain
-) - Include in the following total

P R E C I P I T A T I O N

DAILY PRECIPITATION SUMMARY

Gage Type: *Standard 8 inch diameter*

387B Covina City Yard

Water Year from 10/1/2000 to 9/30/2001

Latitude: 34-05-02 Longitude: 117-53-57 Elevation: 508 Feet Observation Time: 0800

Day	Oct	Nov	Dec	Jan	Feb	Mar	Apr	May	Jun	Jul	Aug	Sep
1												
2							0.01					
3									0.02			
4	T						0.02					
5						0.01						
6						0.59						
7					0.06	0.01	0.60					
8				0.06	0.01	T						
9				0.05								
10				0.07	0.30	0.34						
11	0.02			2.97								
12				0.28	2.68							
13					1.51							
14					0.03			T				
15				0.07								
16				0.07								
17												
18												
19					0.08							
20					0.11							
21					0.01		0.05					
22												
23					0.01							
24				0.20	0.04							
25				0.25	0.85							
26	0.20			0.09	1.31							
27	0.75			0.15	0.03			0.02				
28	0.01			0.06	0.29			0.01				
29	0.09											
30	0.46											
31												
Totals	**1.53**	**0.00**	**0.00**	**4.32**	**7.32**	**0.95**	**0.68**	**0.03**	**0.02**	**0.00**	**0.00**	**0.00**

Water Year Total: **14.85**

NOTE: All values are in terms of inches, unless otherwise specified.

LEGEND:
- * - Unprocessed record
- E - Estimated
- I - Incomplete data
- M - Instrument malfunction
- N - No data available
- Q - Questionable
- T - Trace, unmeasurable amount of rain
-) - Include in the following total

P R E C I P I T A T I O N

DAILY PRECIPITATION SUMMARY

Gage Type: *8.81 inch diameter (DPW)*

388D Paramount-County Fire Department

Water Year from 10/1/2000 to 9/30/2001

Latitude: 33-53-50 Longitude: 118-10-02 Elevation: 80 Feet Observation Time: 1700

Day	Oct	Nov	Dec	Jan	Feb	Mar	Apr	May	Jun	Jul	Aug	Sep
1						0.75						
2												
3												
4												
5										T		
6										0.01		
7							0.29					
8		0.15										
9		0.06		0.63			0.34					
10					0.09							
11		)		1.74	0.20							
12		0.33)	0.01	2.06	0.47							
13				0.73	1.05							
14					1.82							
15							0.34					
16												
17												
18												
19					0.52							
20		0.03										
21												
22												
23					0.04							
24				0.12	0.37							
25					0.60							
26	T											
27	1.97			1.35	1.77							
28					0.69							
29												
30	0.92											
31												
Totals	**2.89**	**0.57**	**0.01**	**6.63**	**7.62**	**0.75**	**0.97**	**0.00**	**0.00**	**0.01**	**0.00**	**0.00**

Water Year Total: **19.45**

NOTE: All values are in terms of inches, unless otherwise specified.

LEGEND:
- * - Unprocessed record
- E - Estimated
- I - Incomplete data
- M - Instrument malfunction
- N - No data available
- Q - Questionable
- T - Trace, unmeasurable amount of rain
-) - Include in the following total

P R E C I P I T A T I O N

DAILY PRECIPITATION SUMMARY

Gage Type: *Standard 8 inch diameter*

390B Morris Dam

Water Year from 10/1/2000 to 9/30/2001

Latitude: 34-10-53 Longitude: 117-52-43 Elevation: 1210 Feet Observation Time: 0800

Day	Oct	Nov	Dec	Jan	Feb	Mar	Apr	May	Jun	Jul	Aug	Sep
1						0.04						
2							0.08		0.01			
3							0.02		0.10			
4							0.07		0.02			
5						0.08	0.01					
6		0.02		T		0.77				0.05		
7	0.03				0.43	0.11	0.73					
8					0.02	0.02	0.45					
9			0.01	0.08		0.02	0.01					
10	0.01		0.01		0.04	0.68	0.08					
11	0.04	0.03		3.51	0.30		0.01					
12	0.01		0.03	0.44	1.20		0.05					
13			T	0.11	2.03							
14					0.49			T				
15												
16				0.03								
17												
18												
19												
20					0.27							
21	T						0.81					
22							0.02					
23					0.06							
24				0.23	0.16							
25				0.36	0.77							
26	0.24			0.04	1.39							
27	0.58			0.24	0.07			0.10				
28	0.16			0.05	0.44			0.06				
29						0.01						
30	0.82			0.03								
31												
Totals	**1.89**	**0.05**	**0.05**	**5.12**	**7.67**	**1.73**	**2.34**	**0.16**	**0.13**	**0.05**	**0.00**	**0.00**

Water Year Total: **19.19**

NOTE: All values are in terms of inches, unless otherwise specified.

LEGEND:
- * - Unprocessed record
- E - Estimated
- I - Incomplete data
- M - Instrument malfunction
- N - No data available
- Q - Questionable
- T - Trace, unmeasurable amount of rain
-) - Include in the following total

P R E C I P I T A T I O N

DAILY PRECIPITATION SUMMARY

Gage Type: *8.81 inch diameter (DPW)*

391C Montebello-Fire Department

Water Year from 10/1/2000 to 9/30/2001

Latitude: 34-01-08 Longitude: 118-06-15 Elevation: 250 Feet Observation Time: 1530

Day	Oct	Nov	Dec	Jan	Feb	Mar	Apr	May	Jun	Jul	Aug	Sep
1												
2												
3												
4												
5												
6										0.02		
7												
8				0.16								
9												
10				0.08								
11				3.57	0.25							
12				0.32	0.28							
13					0.58							
14												
15												
16												
17												
18					1.38							
19					0.01							
20												
21												
22												
23					0.40							
24				0.25								
25					0.36							
26				0.50								
27	0.62											
28	0.05				0.56							
29	0.02											
30												
31												
Totals	**0.69**	**0.00**	**0.00**	**4.88**	**3.82**	**0.00**	**0.00**	**0.00**	**0.00**	**0.02**	**0.00**	**0.00**

Water Year Total: **9.41**

NOTE: All values are in terms of inches, unless otherwise specified.

LEGEND:
- * - Unprocessed record
- E - Estimated
- I - Incomplete data
- M - Instrument malfunction
- N - No data available
- Q - Questionable
- T - Trace, unmeasurable amount of rain
-) - Include in the following total

P R E C I P I T A T I O N

DAILY PRECIPITATION SUMMARY

Gage Type: *Standard 8 inch diameter (DPW)*

394 Highland Park

Water Year from 10/1/2000 to 9/30/2001

Latitude: 34-07-06 Longitude: 118-10-39 Elevation: 620 Feet Observation Time: 1700

Day	Oct	Nov	Dec	Jan	Feb	Mar	Apr	May	Jun	Jul	Aug	Sep
1												
2												
3												
4												
5												
6												
7							1.11					
8			T	0.14								
9												
10				0.45		0.07						
11	0.12			2.07								
12				0.28								
13												
14												
15												
16												
17												
18												
19												
20												
21							0.46					
22												
23					0.50							
24				0.38								
25					0.76							
26	0.18			0.35								
27	0.23				1.90							
28												
29												
30	0.53											
31												
Totals	**1.06**	**0.00**	**0.00**	**3.67**	**3.16**	**0.07**	**1.57**	**0.00**	**0.00**	**0.00**	**0.00**	**0.00**

Water Year Total: **9.53**

NOTE: All values are in terms of inches, unless otherwise specified.

LEGEND:
- * - Unprocessed record
- E - Estimated
- I - Incomplete data
- M - Instrument malfunction
- N - No data available
- Q - Questionable
- T - Trace, unmeasurable amount of rain
-) - Include in the following total

P R E C I P I T A T I O N

DAILY PRECIPITATION SUMMARY

Gage Type: *Automatic recording gage (DPW)*

402F Cedar Springs

Water Year from 10/1/2000 to 9/30/2001

Latitude: 34-21-21 Longitude: 117-52-34 Elevation: 6780 Feet Observation Time: 2400

Day	Oct	Nov	Dec	Jan	Feb	Mar	Apr	May	Jun	Jul	Aug	Sep
1												
2												
3												
4												
5												
6												
7												
8												
9												
10												
11												
12												
13	0.04	0.04										
14												
15												
16												
17												
18												
19												
20												
21												
22												
23												
24												
25												
26												
27												
28												
29												
30												
31												
Totals	**0.04**	**0.04**	**0.00**	**0.00**	**0.00**	**0.00**	**0.00**	**0.00**	**0.00**	**0.00**	**0.00**	**0.00**

Water Year Total: **0.08**

NOTE: All values are in terms of inches, unless otherwise specified.

LEGEND:
- * - Unprocessed record
- E - Estimated
- I - Incomplete data
- M - Instrument malfunction
- N - No data available
- Q - Questionable
- T - Trace, unmeasurable amount of rain
-) - Include in the following total

P R E C I P I T A T I O N

DAILY PRECIPITATION SUMMARY

Gage Type: *Standard 8 inch diameter (DPW)*

405B Soledad Canyon

Water Year from 10/1/2000 to 9/30/2001

Latitude: 34-26-23 Longitude: 118-17-33 Elevation: 2150 Feet Observation Time: 1700

Day	Oct	Nov	Dec	Jan	Feb	Mar	Apr	May	Jun	Jul	Aug	Sep
1												
2												
3												
4						0.23						
5						0.35						
6						0.56				0.05		
7						0.09	0.94					
8				0.09								
9				)		0.10	0.25					
10	0.09	0.17		1.51)	0.35							
11	0.02			2.12	0.45							
12				0.06	1.59							
13					2.28							
14					0.05							
15				0.05								
16												
17												
18					0.07							
19					0.06							
20							0.20					
21							0.62					
22												
23					0.07							
24				0.44	0.13							
25					0.67							
26	0.04			0.32	0.40							
27	0.12			0.01	0.16							
28					0.10							
29												
30	0.21											
31												
Totals	**0.48**	**0.17**	**0.00**	**4.60**	**6.38**	**1.33**	**2.01**	**0.00**	**0.00**	**0.05**	**0.00**	**0.00**

Water Year Total: **15.02**

NOTE: All values are in terms of inches, unless otherwise specified.

LEGEND:
- * - Unprocessed record
- E - Estimated
- I - Incomplete data
- M - Instrument malfunction
- N - No data available
- Q - Questionable
- T - Trace, unmeasurable amount of rain
-) - Include in the following total

P R E C I P I T A T I O N

DAILY PRECIPITATION SUMMARY

Gage Type: *Standard 8 inch diameter (DPW)*

406C West Azusa

Water Year from 10/1/2000 to 9/30/2001

Latitude: 34-06-53 Longitude: 117-54-56 Elevation: 505 Feet Observation Time: 1630

Day	Oct	Nov	Dec	Jan	Feb	Mar	Apr	May	Jun	Jul	Aug	Sep
1						0.06						
2							0.01					
3									0.04			
4							0.07					
5						0.02						
6						0.57						
7					0.13	0.07	0.79					
8							0.34					
9				0.09		0.02						
10					0.08	0.33	0.02					
11				3.15	0.15							
12				0.51	1.42							
13					2.44							
14					0.33							
15												
16				0.50								
17												
18												
19												
20					0.15							
21							0.67					
22												
23					0.03							
24				0.27	0.18							
25				0.14	0.74							
26					1.63							
27				0.19	0.03							
28				0.14	0.63							
29												
30	1.13											
31												
Totals	**1.13**	**0.00**	**0.00**	**4.99**	**7.94**	**1.07**	**1.90**	**0.00**	**0.04**	**0.00**	**0.00**	**0.00**

Water Year Total: **17.07**

NOTE: All values are in terms of inches, unless otherwise specified.

LEGEND:
- * - Unprocessed record
- E - Estimated
- I - Incomplete data
- M - Instrument malfunction
- N - No data available
- Q - Questionable
- T - Trace, unmeasurable amount of rain
-) - Include in the following total

P R E C I P I T A T I O N

DAILY PRECIPITATION SUMMARY

Gage Type: *Standard 8 inch diameter*

409B Pyramid Reservoir

Water Year from 10/1/2000 to 9/30/2001

Latitude: 34-40-34 Longitude: 118-46-47 Elevation: 2505 Feet Observation Time: 0800

Day	Oct	Nov	Dec	Jan	Feb	Mar	Apr	May	Jun	Jul	Aug	Sep
1						T						
2												
3												
4						0.02						T
5						3.95						
6						2.22						
7						0.24	0.56					
8			0.11	0.03			0.05					
9				0.09	T		T					
10			T	0.03	0.23	0.05	0.14					
11				4.19	0.05	0.01	0.01					
12	0.02			0.51	1.12		0.01					
13				0.01	2.60							
14					0.15							
15					T							
16												
17												
18					0.03							
19					0.08							
20					0.25		0.02					
21					T		0.27					
22												
23					0.01							
24				0.20	0.09							
25				0.04	0.37							
26	0.07			0.34	1.57							
27	0.65			0.09	0.02							
28					0.04							
29	0.01											
30	0.32											
31	0.02											
Totals	**1.09**	**0.00**	**0.11**	**5.53**	**6.61**	**6.49**	**1.06**	**0.00**	**0.00**	**0.00**	**0.00**	**0.00**

Water Year Total: **20.89**

NOTE: All values are in terms of inches, unless otherwise specified.

LEGEND:
- * - Unprocessed record
- E - Estimated
- I - Incomplete data
- M - Instrument malfunction
- N - No data available
- Q - Questionable
- T - Trace, unmeasurable amount of rain
-) - Include in the following total

P R E C I P I T A T I O N

DAILY PRECIPITATION SUMMARY

Gage Type: *Standard 8 inch diameter (DPW)*

415 Signal Hill-City Hall

Water Year from 10/1/2000 to 9/30/2001

Latitude: 33-47-49 Longitude: 118-10-03 Elevation: 140 Feet Observation Time: 1700

Day	Oct	Nov	Dec	Jan	Feb	Mar	Apr	May	Jun	Jul	Aug	Sep
1												
2												
3												
4												
5												
6	0.90											
7												
8				0.58								
9												
10												
11												
12					0.66							
13					1.72							
14												
15												
16				2.75								
17												
18												
19												
20					0.27							
21												
22												
23												
24												
25				0.36								
26					3.72							
27	2.00											
28					0.80							
29				0.80								
30												
31												
Totals	**2.90**	**0.00**	**0.00**	**4.49**	**7.17**	**0.00**	**0.00**	**0.00**	**0.00**	**0.00**	**0.00**	**0.00**

Water Year Total: **14.56**

NOTE: All values are in terms of inches, unless otherwise specified.

LEGEND:
- * - Unprocessed record
- E - Estimated
- I - Incomplete data
- M - Instrument malfunction
- N - No data available
- Q - Questionable
- T - Trace, unmeasurable amount of rain
-) - Include in the following total

P R E C I P I T A T I O N

DAILY PRECIPITATION SUMMARY

Gage Type: *Standard 8 inch diameter (DPW)*

423C Angeles Forest-Aliso

Water Year from 10/1/2000 to 9/30/2001

Latitude: 34-24-57 Longitude: 118-05-26 Elevation: 3920 Feet Observation Time:

Day	Oct	Nov	Dec	Jan	Feb	Mar	Apr	May	Jun	Jul	Aug	Sep
1												
2												
3												
4						0.20						
5						0.32						
6						1.20						
7						0.20						
8												
9						0.08						
10						0.08						
11												
12												
13												
14												
15												
16												
17												
18												
19												
20												
21												
22												
23												
24												
25												
26												
27												
28												
29												
30												
31												
Totals	**0.00**	**0.00**	**0.00**	**0.00**	**0.00**	**2.08**	**0.00**	**0.00**	**0.00**	**0.00**	**0.00**	**0.00**

Water Year Total: **2.08**

NOTE: All values are in terms of inches, unless otherwise specified.

LEGEND:
- * - Unprocessed record
- E - Estimated
- I - Incomplete data
- M - Instrument malfunction
- N - No data available
- Q - Questionable
- T - Trace, unmeasurable amount of rain
-) - Include in the following total

P R E C I P I T A T I O N

DAILY PRECIPITATION SUMMARY

Gage Type: *Standard 8 inch diameter (DPW)*

425B San Gabriel Dam

Water Year from 10/1/2000 to 9/30/2001

Latitude: 34-12-19 Longitude: 117-51-38 Elevation: 1481 Feet Observation Time: 0800

Day	Oct	Nov	Dec	Jan	Feb	Mar	Apr	May	Jun	Jul	Aug	Sep
1						0.03						
2												
3									0.03			
4							0.05					
5						0.07						
6		T		T		0.76				0.07		
7	0.01				0.24	0.12	0.98					
8					0.05		0.77					
9				0.07								
10	0.02				0.05	0.62	0.14					
11	0.01	0.01		3.94	0.37							
12	0.01		T	0.43	1.97	0.01	0.06					
13				0.09	3.35							
14					0.56							
15												
16				T								
17												
18												
19												
20					0.58		0.04					
21							1.18					
22												
23					0.05							
24				0.14	0.20							
25				0.56	0.90							
26	0.22			0.03	1.54							
27	0.59			0.34	0.15			0.02				
28	0.06			0.02	0.61			T				
29												
30	1.00											
31												
Totals	**1.92**	**0.01**	**0.00**	**5.62**	**10.62**	**1.61**	**3.22**	**0.02**	**0.03**	**0.07**	**0.00**	**0.00**

Water Year Total: **23.12**

NOTE: All values are in terms of inches, unless otherwise specified.

LEGEND:
- * - Unprocessed record
- E - Estimated
- I - Incomplete data
- M - Instrument malfunction
- N - No data available
- Q - Questionable
- T - Trace, unmeasurable amount of rain
-) - Include in the following total

P R E C I P I T A T I O N

DAILY PRECIPITATION SUMMARY

Gage Type: *Automatic recording gage (DPW)*

434 Agoura

Water Year from 10/1/2000 to 9/30/2001

Latitude: 34-08-08 Longitude: 118-45-08 Elevation: 800 Feet Observation Time: 2400

Day	Oct	Nov	Dec	Jan	Feb	Mar	Apr	May	Jun	Jul	Aug	Sep
1												
2												
3												
4						1.92						
5						3.04						
6						1.40						
7							0.60					
8				0.19								
9							0.08					
10				4.89	0.32							
11				1.22	1.24							
12				0.63	1.36							
13					2.00							
14												
15												
16												
17					0.04							
18												
19					0.32							
20							0.40					
21					0.04		0.04					
22												
23					0.04							
24				0.27	0.76							
25					1.56							
26	0.16			0.08	0.96							
27	0.08				0.16							
28					0.12							
29	0.55			0.04								
30												
31												
Totals	**0.79**	**0.00**	**0.00**	**7.32**	**8.92**	**6.36**	**1.12**	**0.00**	**0.00**	**0.00**	**0.00**	**0.00**

Water Year Total: **24.51**

NOTE: All values are in terms of inches, unless otherwise specified.

LEGEND:
- * - Unprocessed record
- E - Estimated
- I - Incomplete data
- M - Instrument malfunction
- N - No data available
- Q - Questionable
- T - Trace, unmeasurable amount of rain
-) - Include in the following total

P R E C I P I T A T I O N

DAILY PRECIPITATION SUMMARY

Gage Type: *Automatic recording gage (DPW)*

435 Monte Nido

Water Year from 10/1/2000 to 9/30/2001

Latitude: 34-04-41 Longitude: 118-41-35 Elevation: 600 Feet Observation Time: 2400

Day	Oct	Nov	Dec	Jan	Feb	Mar	Apr	May	Jun	Jul	Aug	Sep
1												
2		0.04										
3												
4						1.24						
5						2.36						
6						1.20	0.12					
7							1.16					
8				0.20								
9												
10				5.00	0.60							
11				0.75	1.72							
12				0.71	1.60							
13					1.56							
14												
15												
16												
17					0.04							
18												
19					0.80							
20					0.04		0.92					
21							0.08					
22												
23					0.08							
24				0.51	0.48							
25					1.56							
26	0.98			0.08	0.60							
27	0.48				0.20							
28					0.16							
29	0.90											
30												0.04
31												
Totals	**2.36**	**0.04**	**0.00**	**7.25**	**9.44**	**4.80**	**2.28**	**0.00**	**0.00**	**0.00**	**0.00**	**0.04**

Water Year Total: **26.21**

NOTE: All values are in terms of inches, unless otherwise specified.

LEGEND:
- * - Unprocessed record
- E - Estimated
- I - Incomplete data
- M - Instrument malfunction
- N - No data available
- Q - Questionable
- T - Trace, unmeasurable amount of rain
-) - Include in the following total

P R E C I P I T A T I O N

DAILY PRECIPITATION SUMMARY

Gage Type: *Standard 8 inch diameter*

436C Hansen Dam

Water Year from 10/1/2000 to 9/30/2001

Latitude: 34-16-08 Longitude: 118-23-59 Elevation: 1110 Feet Observation Time: 1700

Day	Oct	Nov	Dec	Jan	Feb	Mar	Apr	May	Jun	Jul	Aug	Sep
1												
2												
3												
4						0.01	0.02					
5						1.16						
6						0.68						
7							0.84					
8				0.10								
9						0.02	0.06					
10				0.31	0.48	0.22						
11				3.10	0.02							
12				0.28	1.76							
13					1.68							
14					0.55							
15												
16												
17												
18					0.05							
19	0.11				0.04							
20					0.01							
21							0.60					
22												
23					0.04							
24				0.43	0.24							
25					0.59							
26	0.02			0.30	0.67							
27	0.85			0.01	0.11							
28					0.21							
29	0.27											
30	0.33											
31												
Totals	**1.58**	**0.00**	**0.00**	**4.53**	**6.45**	**2.09**	**1.52**	**0.00**	**0.00**	**0.00**	**0.00**	**0.00**

Water Year Total: **16.17**

NOTE: All values are in terms of inches, unless otherwise specified.

LEGEND:
- * - Unprocessed record
- E - Estimated
- I - Incomplete data
- M - Instrument malfunction
- N - No data available
- Q - Questionable
- T - Trace, unmeasurable amount of rain
-) - Include in the following total

P R E C I P I T A T I O N

DAILY PRECIPITATION SUMMARY

Gage Type: *Automatic recording gage (DPW)*

446 Aliso Canyon-Oat Mountain

Water Year from 10/1/2000 to 9/30/2001

Latitude: 34-18-53 Longitude: 118-33-25 Elevation: 2367 Feet Observation Time: 2400

Day	Oct	Nov	Dec	Jan	Feb	Mar	Apr	May	Jun	Jul	Aug	Sep
1												
2												
3												
4						0.28						
5						0.96						
6						0.68						
7						0.04	1.24					
8				0.12								
9						0.08	0.04					
10				1.69	0.64	0.04						
11	0.08			1.46	1.28							
12				0.55	1.44	0.04						
13					1.16							
14					0.04							
15												
16												
17												
18												
19					0.40							
20					0.04		0.28					
21							0.60					
22												
23					0.08							
24				0.67	0.60							
25					1.68							
26	0.39			0.12	0.76							
27	0.24				0.24							
28					0.36							
29	1.02											
30												
31												
Totals	**1.73**	**0.00**	**0.00**	**4.61**	**8.72**	**2.12**	**2.16**	**0.00**	**0.00**	**0.00**	**0.00**	**0.00**

Water Year Total: **19.34**

NOTE: All values are in terms of inches, unless otherwise specified.

LEGEND:
- * - Unprocessed record
- E - Estimated
- I - Incomplete data
- M - Instrument malfunction
- N - No data available
- Q - Questionable
- T - Trace, unmeasurable amount of rain
-) - Include in the following total

P R E C I P I T A T I O N

DAILY PRECIPITATION SUMMARY

Gage Type: *Standard 8 inch diameter (DPW)*

447C Carbon Canyon

Water Year from 10/1/2000 to 9/30/2001

Latitude: 34-02-18 Longitude: 118-38-56 Elevation: 50 Feet Observation Time: 1600

Day	Oct	Nov	Dec	Jan	Feb	Mar	Apr	May	Jun	Jul	Aug	Sep
1						0.11						
2												
3												
4	0.01											
5						0.50				T		
6						2.00				T		
7			T			0.18	0.96					
8					0.03							
9				0.40	0.69							
10												
11				3.50	0.01							
12				0.75	0.75							
13				0.04	1.70							
14					0.07							
15					0.08							
16												
17												
18												
19					0.04							
20					0.60							
21							0.26					
22												
23												
24				0.24	0.11							
25				0.60	0.42							
26	0.10			0.37	1.80							
27	1.78			0.27	0.14							
28					0.16							
29												
30	0.66											
31												
Totals	**2.55**	**0.00**	**0.00**	**6.17**	**6.60**	**2.79**	**1.22**	**0.00**	**0.00**	**0.00**	**0.00**	**0.00**

Water Year Total: **19.33**

NOTE: All values are in terms of inches, unless otherwise specified.

LEGEND:
- * - Unprocessed record
- E - Estimated
- I - Incomplete data
- M - Instrument malfunction
- N - No data available
- Q - Questionable
- T - Trace, unmeasurable amount of rain
-) - Include in the following total

P R E C I P I T A T I O N

DAILY PRECIPITATION SUMMARY

Gage Type: *Standard 8 inch diameter (DPW)*

449B Eaton Wash Dam

Water Year from 10/1/2000 to 9/30/2001

Latitude: 34-10-06 Longitude: 118-05-33 Elevation: 880 Feet Observation Time:

Day	Oct	Nov	Dec	Jan	Feb	Mar	Apr	May	Jun	Jul	Aug	Sep
1							0.08					
2							0.08					
3									0.04			
4						0.24						
5						0.08				0.04		
6						0.84						
7							1.32					
8					0.32							
9						0.60						
10					0.20							
11	0.04	0.04			0.24							
12					2.08							
13					1.72							
14												
15												
16												
17												
18					0.04							
19					0.12							
20							0.48					
21							0.24					
22												
23					0.12							
24				0.40	0.44							
25					1.68							
26	0.20			0.31	0.32							
27	0.31				0.44			0.08				
28					0.24							
29	0.47											
30	0.04											
31												
Totals	**1.06**	**0.04**	**0.00**	**0.71**	**7.96**	**1.76**	**2.20**	**0.08**	**0.04**	**0.04**	**0.00**	**0.00**

Water Year Total: **13.89**

NOTE: All values are in terms of inches, unless otherwise specified.

LEGEND:
- * - Unprocessed record
- E - Estimated
- I - Incomplete data
- M - Instrument malfunction
- N - No data available
- Q - Questionable
- T - Trace, unmeasurable amount of rain
-) - Include in the following total

P R E C I P I T A T I O N

DAILY PRECIPITATION SUMMARY

Gage Type: *Automatic recording gage (DPW)*

453D Devil's Gate Dam

Water Year from 10/1/2000 to 9/30/2001

Latitude: 34-10-53 Longitude: 118-10-27 Elevation: 980 Feet Observation Time: 2400

Day	Oct	Nov	Dec	Jan	Feb	Mar	Apr	May	Jun	Jul	Aug	Sep
1							0.04					
2							0.04					
3												
4						0.28	0.04					
5						0.12						
6						0.72						
7					0.08		1.32					
8				0.08								
9						0.20						
10				1.85	0.40	0.12						
11				1.70	0.36							
12				0.23	2.28							
13					2.12							
14												
15				0.04								
16												
17												
18					0.04							
19					0.24							
20							0.52					
21							0.24					
22												
23					0.08							
24				0.43	0.52							
25					1.44							
26	0.20			0.04	0.32							
27	0.23				0.40							
28					0.16							
29	0.55											
30	0.04											
31												
Totals	**1.02**	**0.00**	**0.00**	**4.37**	**8.44**	**1.44**	**2.20**	**0.00**	**0.00**	**0.00**	**0.00**	**0.00**

Water Year Total: **17.47**

NOTE: All values are in terms of inches, unless otherwise specified.

LEGEND:
- * - Unprocessed record
- E - Estimated
- I - Incomplete data
- M - Instrument malfunction
- N - No data available
- Q - Questionable
- T - Trace, unmeasurable amount of rain
-) - Include in the following total

P R E C I P I T A T I O N

DAILY PRECIPITATION SUMMARY

Gage Type: *Standard 8 inch diameter (DPW)*

455B Lancaster-State Hwy Maintenance Sta.

Water Year from 10/1/2000 to 9/30/2001

Latitude: 34-40-57 Longitude: 118-08-02 Elevation: 2395 Feet Observation Time: 1700

Day	Oct	Nov	Dec	Jan	Feb	Mar	Apr	May	Jun	Jul	Aug	Sep
1												
2												
3												
4						0.01						
5												
6						0.17						
7						0.13	0.36					
8				0.05								
9				0.07			0.13					
10					0.04							
11				1.03		0.17						
12				0.02	0.74							
13					2.10							
14												
15												
16				0.02								
17												
18	0.01											
19					0.10							
20												
21							0.13					
22												
23					)							
24				0.11	)							
25					)							
26	0.04				0.92)							
27	0.02			0.23	0.35							
28					0.01							
29	0.30											
30												
31												
Totals	**0.37**	**0.00**	**0.00**	**1.53**	**4.26**	**0.48**	**0.62**	**0.00**	**0.00**	**0.00**	**0.00**	**0.00**

Water Year Total: **7.26**

NOTE: All values are in terms of inches, unless otherwise specified.

LEGEND:
- * - Unprocessed record
- E - Estimated
- I - Incomplete data
- M - Instrument malfunction
- N - No data available
- Q - Questionable
- T - Trace, unmeasurable amount of rain
-) - Include in the following total

P R E C I P I T A T I O N

DAILY PRECIPITATION SUMMARY

Gage Type: *Standard 8 inch diameter (DPW)*

462B Los AngelesHillcrest Country Club

Water Year from 10/1/2000 to 9/30/2001

Latitude: 34-02-54 Longitude: 118-24-06 Elevation: 185 Feet Observation Time: 0630

Day	Oct	Nov	Dec	Jan	Feb	Mar	Apr	May	Jun	Jul	Aug	Sep
1												
2												
3												
4						0.24						
5												
6						1.33						
7							0.72					
8							0.20					
9				0.19								
10					0.49							
11				4.50	0.07							
12				0.68	1.64							
13				0.40	2.57							
14					0.43							
15												
16												
17												
18												
19												
20					0.82							
21												
22												
23												
24				0.10	0.11							
25				0.28	0.39							
26	0.06			0.24								
27	1.09			0.61	0.10							
28					0.24							
29												
30	0.46											
31												
Totals	**1.61**	**0.00**	**0.00**	**7.00**	**6.86**	**1.57**	**0.92**	**0.00**	**0.00**	**0.00**	**0.00**	**0.00**

Water Year Total: **17.96**

NOTE: All values are in terms of inches, unless otherwise specified.

LEGEND:
- * - Unprocessed record
- E - Estimated
- I - Incomplete data
- M - Instrument malfunction
- N - No data available
- Q - Questionable
- T - Trace, unmeasurable amount of rain
-) - Include in the following total

P R E C I P I T A T I O N

DAILY PRECIPITATION SUMMARY

Gage Type: *Standard 8 inch diameter*

465C Sepulveda Dam

Water Year from 10/1/2000 to 9/30/2001

Latitude: 34-10-06 Longitude: 118-28-11 Elevation: 683 Feet Observation Time: 1700

Day	Oct	Nov	Dec	Jan	Feb	Mar	Apr	May	Jun	Jul	Aug	Sep
1												
2												
3												
4						0.42						
5				0.01		1.17						
6						0.84				0.01		
7							0.55					
8			0.01	0.14								
9							0.17					
10				4.11	0.50							
11				1.13	0.03							
12				0.42	2.48							
13					2.24							
14					0.16							
15												
16												
17												
18					0.04							
19					0.32							
20					0.04							
21							0.39					
22												
23					0.03							
24				0.25	0.30							
25					0.74							
26	0.04			0.48	1.76							
27	1.07				0.09							
28					0.39							
29	0.07											
30	0.29											
31												
Totals	**1.47**	**0.00**	**0.01**	**6.54**	**9.12**	**2.43**	**1.11**	**0.00**	**0.00**	**0.01**	**0.00**	**0.00**

Water Year Total: **20.69**

NOTE: All values are in terms of inches, unless otherwise specified.

LEGEND:
- * - Unprocessed record
- E - Estimated
- I - Incomplete data
- M - Instrument malfunction
- N - No data available
- Q - Questionable
- T - Trace, unmeasurable amount of rain
-) - Include in the following total

P R E C I P I T A T I O N

DAILY PRECIPITATION SUMMARY

Gage Type: *Standard 8 inch diameter (DPW)*

482 Los Angeles-U.S.C.

Water Year from 10/1/2000 to 9/30/2001

Latitude: 34-01-14 Longitude: 118-17-15 Elevation: 208 Feet Observation Time: 1700

Day	Oct	Nov	Dec	Jan	Feb	Mar	Apr	May	Jun	Jul	Aug	Sep
1												
2												
3												
4												
5						0.60						
6						0.49						
7			0.01		0.07	0.01	0.65					
8				0.24								
9												
10				0.57	0.34							
11	0.16			3.05	0.50							
12				0.43	1.80							
13				0.04	1.20							
14					0.10							
15												
16												
17												
18					0.01							
19												
20					0.54							
21							0.37					
22												
23					0.01							
24				0.29	0.96							
25					1.04							
26	0.08			0.66	0.10							
27	0.20			0.02	0.65							
28	0.03				0.20							
29	0.02											
30	0.49											
31												
Totals	**0.98**	**0.00**	**0.01**	**5.30**	**7.52**	**1.10**	**1.02**	**0.00**	**0.00**	**0.00**	**0.00**	**0.00**

Water Year Total: **15.93**

NOTE: All values are in terms of inches, unless otherwise specified.

LEGEND:
- * - Unprocessed record
- E - Estimated
- I - Incomplete data
- M - Instrument malfunction
- N - No data available
- Q - Questionable
- T - Trace, unmeasurable amount of rain
-) - Include in the following total

P R E C I P I T A T I O N

DAILY PRECIPITATION SUMMARY

Gage Type: *Standard 8 inch diameter (DPW)*

488B Kagel Canyon Patrol Station

Water Year from 10/1/2000 to 9/30/2001

Latitude: 34-17-45 Longitude: 118-22-30 Elevation: 1450 Feet Observation Time: 1700

Day	Oct	Nov	Dec	Jan	Feb	Mar	Apr	May	Jun	Jul	Aug	Sep
1						0.10						
2												
3												
4							0.03					
5						0.38						
6						1.33						
7						0.03	1.05					
8							0.08					
9				0.10								
10					0.92	0.14	0.24					
11				2.75	0.16							
12				0.97	1.50							
13					2.00							
14					0.72							
15												
16												
17												
18												
19												
20					0.11							
21							0.90					
22												
23					0.10							
24				0.40								
25				0.16	0.46							
26					0.70							
27	1.10											
28					0.15							
29	0.80											
30												
31												
Totals	**1.90**	**0.00**	**0.00**	**4.38**	**6.82**	**1.98**	**2.30**	**0.00**	**0.00**	**0.00**	**0.00**	**0.00**

Water Year Total: **17.38**

NOTE: All values are in terms of inches, unless otherwise specified.

LEGEND:
- * - Unprocessed record
- E - Estimated
- I - Incomplete data
- M - Instrument malfunction
- N - No data available
- Q - Questionable
- T - Trace, unmeasurable amount of rain
-) - Include in the following total

P R E C I P I T A T I O N

DAILY PRECIPITATION SUMMARY

Gage Type: *Standard 8 inch diameter (DPW)*

491D Pacific Palisades

Water Year from 10/1/1999 to 9/30/2000

Latitude: 34-02-22 Longitude: 118-31-43 Elevation: 293 Feet Observation Time: 1700

Day	Oct	Nov	Dec	Jan	Feb	Mar	Apr	May	Jun	Jul	Aug	Sep
1												
2												
3												
4						0.42						
5						1.81						
6						0.04	)					
7							1.18)					
8				0.24	0.06							
9												
10				)	0.90							
11				4.82)								
12				1.18)								
13					4.41							
14					0.10							
15												
16												
17												
18					0.08							
19					0.97							
20							)					
21							0.38)					
22												
23					0.13							
24				0.36								
25	0.13											
26	)			0.78	2.92							
27	)											
28	1.50)											
29	0.48											
30												
31												
Totals	**2.11**	**0.00**	**0.00**	**7.38**	**9.57**	**2.27**	**1.56**	**0.00**	**0.00**	**0.00**	**0.00**	**0.00**

Water Year Total: **22.89**

NOTE: All values are in terms of inches, unless otherwise specified.

LEGEND:
- * - Unprocessed record
- E - Estimated
- I - Incomplete data
- M - Instrument malfunction
- N - No data available
- Q - Questionable
- T - Trace, unmeasurable amount of rain
-) - Include in the following total

P R E C I P I T A T I O N

DAILY PRECIPITATION SUMMARY

Gage Type: *Automatic recording gage (DPW)*

492A Chilao - State Highway Maintenance Sta.

Water Year from 10/1/2000 to 9/30/2001

Latitude: 34-19-05 Longitude: 118-00-30 Elevation: 5275 Feet Observation Time: 2400

Day	Oct	Nov	Dec	Jan	Feb	Mar	Apr	May	Jun	Jul	Aug	Sep
1												
2												
3												
4												
5												
6												
7												
8				0.12								
9												
10	0.04			0.35								
11	0.12			0.04						0.08		
12				0.43	0.04							
13				0.63	0.08							
14				0.12	0.40							
15					0.80							
16					0.20							
17												
18												
19					0.36							
20												
21												
22												
23					0.48							
24					0.08							
25				0.12	0.60							
26	0.16				0.52							
27				0.08								
28												
29	0.43											
30				0.12								
31												
Totals	**0.75**	**0.00**	**0.00**	**2.01**	**3.56**	**0.00**	**0.00**	**0.00**	**0.00**	**0.08**	**0.00**	**0.00**

Water Year Total: **6.40**

NOTE: All values are in terms of inches, unless otherwise specified.

LEGEND:
- * - Unprocessed record
- E - Estimated
- I - Incomplete data
- M - Instrument malfunction
- N - No data available
- Q - Questionable
- T - Trace, unmeasurable amount of rain
-) - Include in the following total

P R E C I P I T A T I O N

DAILY PRECIPITATION SUMMARY

Gage Type: *8.81 inch diameter (DPW)*

497 Claremont-Slaughter

Water Year from 10/1/2000 to 9/30/2001

Latitude: 34-07-35 Longitude: 117-43-55 Elevation: 1350 Feet Observation Time: 1700

Day	Oct	Nov	Dec	Jan	Feb	Mar	Apr	May	Jun	Jul	Aug	Sep
1												
2												
3												
4							0.08					
5				T						0.09		
6		0.02		0.03		0.66						
7					0.02	0.07	0.87					
8				0.09								
9				0.01			0.03					
10	0.02		0.05	0.18	0.32	0.50	0.02					
11		0.05		3.09		0.01	0.01					
12		0.09	0.01	0.01	1.98							
13					1.71							
14					0.09							
15				0.02								
16				0.03								
17												
18												
19					0.07							
20					0.09							
21							1.00					
22	0.27											
23					0.25							
24				0.52	0.43							
25				0.02	0.72							
26	0.36			0.29	0.82							
27	0.54				0.40			0.06				
28	0.02				0.39			0.02				
29	)			0.01								
30	0.57)											
31												
Totals	**1.78**	**0.16**	**0.06**	**4.30**	**7.29**	**1.24**	**2.01**	**0.08**	**0.00**	**0.09**	**0.00**	**0.00**

Water Year Total: **17.01**

NOTE: All values are in terms of inches, unless otherwise specified.

LEGEND:
- * - Unprocessed record
- E - Estimated
- I - Incomplete data
- M - Instrument malfunction
- N - No data available
- Q - Questionable
- T - Trace, unmeasurable amount of rain
-) - Include in the following total

P R E C I P I T A T I O N

DAILY PRECIPITATION SUMMARY

Gage Type: *Automatic recording gage (DPW)*

517B Lewis Ranch

Water Year from 10/1/2000 to 9/30/2001

Latitude: 34-25-12 Longitude: 117-53-11 Elevation: 4615 Feet Observation Time: 2400

Day	Oct	Nov	Dec	Jan	Feb	Mar	Apr	May	Jun	Jul	Aug	Sep
1												
2												
3												
4						0.16						
5						0.28						
6						0.80						
7						0.36	0.52					
8							0.16					
9												
10	0.08					0.04						
11												
12												
13												
14												
15												
16												
17												
18												
19												
20							0.12					
21							0.20					
22							0.08					
23												
24												
25												
26												
27	0.04											
28												
29	0.24											
30												
31						0.04						
Totals	**0.36**	**0.00**	**0.00**	**0.00**	**0.00**	**1.68**	**1.08**	**0.00**	**0.00**	**0.00**	**0.00**	**0.00**

Water Year Total: **3.12**

NOTE: All values are in terms of inches, unless otherwise specified.

LEGEND:
- * - Unprocessed record
- E - Estimated
- I - Incomplete data
- M - Instrument malfunction
- N - No data available
- Q - Questionable
- T - Trace, unmeasurable amount of rain
-) - Include in the following total

P R E C I P I T A T I O N

DAILY PRECIPITATION SUMMARY

Gage Type: *Standard 8 inch diameter*

542 Fairmont

Water Year from 10/1/2000 to 9/30/2001

Latitude: 34-42-15 Longitude: 118-25-40 Elevation: 3050 Feet Observation Time: 0700

Day	Oct	Nov	Dec	Jan	Feb	Mar	Apr	May	Jun	Jul	Aug	Sep
1												
2												
3												
4												
5												
6												
7												
8												
9												
10												
11	0.03	0.01										
12	0.01											
13												
14												
15												
16												
17												
18												
19												
20												
21												
22												
23												
24												
25												
26	0.07											
27	0.11											
28												
29	0.01											
30	0.38											
31												
Totals	**0.61**	**0.01**	**0.00**	**0.00**	**0.00**	**0.00**	**0.00**	**0.00**	**0.00**	**0.00**	**0.00**	**0.00**

Water Year Total: **0.62**

NOTE: All values are in terms of inches, unless otherwise specified.

LEGEND:
- * - Unprocessed record
- E - Estimated
- I - Incomplete data
- M - Instrument malfunction
- N - No data available
- Q - Questionable
- T - Trace, unmeasurable amount of rain
-) - Include in the following total

P R E C I P I T A T I O N

DAILY PRECIPITATION SUMMARY

Gage Type: *Standard 8 inch diameter (DPW)*
564C Llano

Water Year from 10/1/2000 to 9/30/2001

Latitude: 34-29-13 Longitude: 117-50-02 Elevation: 3390 Feet Observation Time: 1700

Day	Oct	Nov	Dec	Jan	Feb	Mar	Apr	May	Jun	Jul	Aug	Sep
1						0.04						
2												
3										0.06		0.03
4												
5												
6						0.50						
7						0.10						
8				0.05	0.05		0.11					
9				0.32						0.06		
10					0.01		0.06					
11				1.36								
12				0.25	0.41	0.10						
13					1.60							
14												
15				0.01								
16				0.17								
17												
18												
19					0.03							
20												
21							0.11					
22												
23												
24				0.02								
25												
26				0.05	0.51							
27	0.03			0.30	0.42							
28	0.01			0.11	0.44							
29												
30	0.15											
31												
Totals	**0.19**	**0.00**	**0.00**	**2.64**	**3.47**	**0.74**	**0.28**	**0.00**	**0.00**	**0.12**	**0.00**	**0.03**

Water Year Total: **7.47**

NOTE: All values are in terms of inches, unless otherwise specified.

LEGEND:
* - Unprocessed record
E - Estimated
I - Incomplete data
M - Instrument malfunction
N - No data available
Q - Questionable
T - Trace, unmeasurable amount of rain
) - Include in the following total

P R E C I P I T A T I O N

DAILY PRECIPITATION SUMMARY

Gage Type: *Standard 8 inch diameter*

591B Santa Anita Reservoir

Water Year from 10/1/2000 to 9/30/2001

Latitude: 34-11-08 Longitude: 118-06-16 Elevation: 1205 Feet Observation Time: 0800

Day	Oct	Nov	Dec	Jan	Feb	Mar	Apr	May	Jun	Jul	Aug	Sep
1												
2							0.28					
3												
4							0.02					
5						0.40				0.09		
6						0.90						
7					0.36	0.16	1.18					
8			0.03									
9				0.40		0.13						
10					0.15	0.51						
11	0.06			3.81	0.22							
12				0.16	1.25		0.04					
13					2.98							
14												
15												
16				0.04								
17												
18												
19					0.04							
20					0.17							
21							0.86					
22							0.03					
23					0.13							
24				0.36	0.12							
25				0.10	0.68							
26	0.33			0.13	1.68							
27	0.20			0.14	0.07			0.05				
28					0.63			0.10				
29												
30	0.70											
31												
Totals	**1.29**	**0.00**	**0.03**	**5.14**	**8.48**	**2.10**	**2.41**	**0.15**	**0.00**	**0.09**	**0.00**	**0.00**

Water Year Total: **19.69**

NOTE: All values are in terms of inches, unless otherwise specified.

LEGEND:
- * - Unprocessed record
- E - Estimated
- I - Incomplete data
- M - Instrument malfunction
- N - No data available
- Q - Questionable
- T - Trace, unmeasurable amount of rain
-) - Include in the following total

P R E C I P I T A T I O N

DAILY PRECIPITATION SUMMARY

Gage Type: *Standard 8 inch diameter*

598D Neenach-Check 43-California D.W.R.

Water Year from 10/1/2000 to 9/30/2001

Latitude: 34-47-40 Longitude: 118-37-15 Elevation: 2965 Feet Observation Time: 0800

Day	Oct	Nov	Dec	Jan	Feb	Mar	Apr	May	Jun	Jul	Aug	Sep
1						0.02						
2												
3												
4												
5						0.33						
6						0.45						
7					0.02	0.28	0.22					
8					0.04	0.01	0.20					
9				0.05	0.05		0.01					
10				0.03	0.03	0.05	0.09					
11	0.62			1.93	1.93	0.02						
12	0.11			0.19	0.19		0.03					
13				0.06	0.06							
14				0.01	0.01							
15					0.01							
16												
17												
18					0.02							
19					0.17							
20					0.08		0.12					
21							0.10					
22							0.01					
23												
24				0.14	0.14							
25				0.13	0.13							
26				0.16	0.16							
27	0.02			0.04	0.04							
28				0.01	0.01							
29												
30	0.28											
31												
Totals	**1.03**	**0.00**	**0.00**	**2.75**	**3.09**	**1.16**	**0.78**	**0.00**	**0.00**	**0.00**	**0.00**	**0.00**

Water Year Total: **8.81**

NOTE: All values are in terms of inches, unless otherwise specified.

LEGEND:
- * - Unprocessed record
- E - Estimated
- I - Incomplete data
- M - Instrument malfunction
- N - No data available
- Q - Questionable
- T - Trace, unmeasurable amount of rain
-) - Include in the following total

P R E C I P I T A T I O N

DAILY PRECIPITATION SUMMARY

Gage Type: *Standard 8 inch diameter*

610B Pasadena-City Hall

Water Year from 10/1/2000 to 9/30/2001

Latitude: 34-08-54 Longitude: 118-08-36 Elevation: 864 Feet Observation Time: 1600

Day	Oct	Nov	Dec	Jan	Feb	Mar	Apr	May	Jun	Jul	Aug	Sep
1												
2												
3												
4	0.01						0.14					
5						0.33				0.06		
6	0.01					0.65				0.02		
7					0.17		1.37					
8			T	0.09								
9				T		0.03						
10				0.20	0.17	0.30						
11	0.08			3.65	0.04							
12	T			0.28	1.48							
13					2.30							
14					0.38							
15												
16												
17												
18					0.08							
19					0.14							
20					0.08							
21												
22							0.62					
23	T				0.13							
24				0.39	0.39							
25					0.98							
26	0.30			0.35	1.34							
27	0.30			0.10	0.40			T				
28					0.35			T				
29	0.13											
30	0.46											
31												
Totals	**1.29**	**0.00**	**0.00**	**5.06**	**8.43**	**1.31**	**2.13**	**0.00**	**0.00**	**0.08**	**0.00**	**0.00**

Water Year Total: **18.30**

NOTE: All values are in terms of inches, unless otherwise specified.

LEGEND:
- * - Unprocessed record
- E - Estimated
- I - Incomplete data
- M - Instrument malfunction
- N - No data available
- Q - Questionable
- T - Trace, unmeasurable amount of rain
-) - Include in the following total

P R E C I P I T A T I O N

DAILY PRECIPITATION SUMMARY

Gage Type: *Standard 8 inch diameter*

612B Pasadena-Chlorine Plant

Water Year from 10/1/2000 to 9/30/2001

Latitude: 34-12-04 Longitude: 118-09-49 Elevation: 1160 Feet Observation Time: 0800

Day	Oct	Nov	Dec	Jan	Feb	Mar	Apr	May	Jun	Jul	Aug	Sep
1												
2							0.21					
3												
4							0.01					
5										0.07		
6				0.06		1.39						
7							0.56					
8			0.03				0.30					
9				0.10		0.09						
10					0.26	0.31						
11	0.01			4.07	0.32							
12				0.42	1.60		0.05					
13					3.36							
14					0.34							
15												
16				0.10								
17												
18												
19					0.04							
20					0.29							
21												
22							0.68					
23					0.08		0.02					
24				0.36	0.07							
25				0.70	0.64							
26	0.20			0.15	1.60							
27	0.34			0.15	0.07			0.03				
28					0.61			0.01				
29												
30	0.69											
31												
Totals	**1.24**	**0.00**	**0.03**	**6.11**	**9.28**	**1.79**	**1.83**	**0.04**	**0.00**	**0.07**	**0.00**	**0.00**

Water Year Total: **20.39**

NOTE: All values are in terms of inches, unless otherwise specified.

LEGEND:
- * - Unprocessed record
- E - Estimated
- I - Incomplete data
- M - Instrument malfunction
- N - No data available
- Q - Questionable
- T - Trace, unmeasurable amount of rain
-) - Include in the following total

P R E C I P I T A T I O N

DAILY PRECIPITATION SUMMARY

Gage Type: *Standard 8 inch diameter*

613C Pasadena Fire Station

Water Year from 10/1/2000 to 9/30/2001

Latitude: 34-07-15 Longitude: 118-08-05 Elevation: 779 Feet Observation Time: 0800

Day	Oct	Nov	Dec	Jan	Feb	Mar	Apr	May	Jun	Jul	Aug	Sep
1												
2							0.04					
3												
4							0.04					
5						0.28			0.07			
6						0.61						
7					0.17	0.02	1.43					
8			0.01	0.09								
9						0.02						
10				0.20	0.18	0.22						
11	0.11			3.65	1.26							
12				0.28								
13					2.67							
14												
15												
16				0.20								
17												
18												
19					0.06							
20					0.21							
21							0.64					
22												
23					0.11							
24				0.49	0.12							
25				0.01	0.78							
26	0.28			0.26	1.85							
27	0.34			0.16	0.09			0.01				
28					0.57			0.01				
29												
30												
31	0.75											
Totals	**1.48**	**0.00**	**0.01**	**5.34**	**8.07**	**1.15**	**2.15**	**0.02**	**0.07**	**0.00**	**0.00**	**0.00**

Water Year Total: **18.29**

NOTE: All values are in terms of inches, unless otherwise specified.

LEGEND:
- * - Unprocessed record
- E - Estimated
- I - Incomplete data
- M - Instrument malfunction
- N - No data available
- Q - Questionable
- T - Trace, unmeasurable amount of rain
-) - Include in the following total

P R E C I P I T A T I O N

DAILY PRECIPITATION SUMMARY

Gage Type: *Automatic recording gage (DPW)*

619 San Antonio Canyon-Sierra Power House

Water Year from 10/1/2000 to 9/30/2001

Latitude: 34-12-29 Longitude: 117-40-26 Elevation: 3110 Feet Observation Time: 2400

Day	Oct	Nov	Dec	Jan	Feb	Mar	Apr	May	Jun	Jul	Aug	Sep
1				0.40								
2												
3												
4												
5										0.04		
6							0.08					
7							1.60					
8												
9	0.04						0.08					
10	0.04	0.04		0.04			0.80					
11	0.24	0.24		0.24			0.08					
12												
13												
14												
15												
16												
17												
18												
19							0.04					
20							0.92					
21							0.76					
22												
23												
24												
25	0.24											
26	0.36											
27	0.04				0.24							
28	0.88		0.24									
29	0.04											
30			3.24									
31			0.52									
Totals	**1.88**	**0.28**	**4.00**	**0.68**	**0.24**	**0.00**	**4.36**	**0.00**	**0.00**	**0.04**	**0.00**	**0.00**

Water Year Total: **11.48**

NOTE: All values are in terms of inches, unless otherwise specified.

LEGEND:
- * - Unprocessed record
- E - Estimated
- I - Incomplete data
- M - Instrument malfunction
- N - No data available
- Q - Questionable
- T - Trace, unmeasurable amount of rain
-) - Include in the following total

P R E C I P I T A T I O N

DAILY PRECIPITATION SUMMARY

Gage Type: *Standard 8 inch diameter*

627 San Gabriel Canyon-Power House

Water Year from 10/1/2000 to 9/30/2001

Latitude: 34-09-20 Longitude: 117-54-28 Elevation: 744 Feet Observation Time: 0800

Day	Oct	Nov	Dec	Jan	Feb	Mar	Apr	May	Jun	Jul	Aug	Sep
1						0.02						
2							0.13					
3									0.08			
4							0.04		0.01			
5						0.06						
6						0.77				0.06		
7	0.01				0.28	0.12	0.65					
8							0.68					
9				0.07		0.04	0.06					
10					0.04	0.55						
11	0.01			3.83	0.16		0.04					
12			0.03	0.47	1.54		0.02					
13					2.75							
14					0.41							
15												
16				0.04								
17												
18												
19												
20					0.18							
21							0.75					
22												
23					0.14							
24				0.34	0.11							
25				0.13	0.81							
26	0.22			0.07	1.64							
27	0.63			0.13	0.05			0.10				
28	0.06			0.01	0.59							
29				0.01								
30	0.71											
31												
Totals	**1.64**	**0.00**	**0.03**	**5.10**	**8.70**	**1.56**	**2.37**	**0.10**	**0.09**	**0.06**	**0.00**	**0.00**

Water Year Total: **19.65**

NOTE: All values are in terms of inches, unless otherwise specified.

LEGEND:
- * - Unprocessed record
- E - Estimated
- I - Incomplete data
- M - Instrument malfunction
- N - No data available
- Q - Questionable
- T - Trace, unmeasurable amount of rain
-) - Include in the following total

P R E C I P I T A T I O N

DAILY PRECIPITATION SUMMARY

Gage Type: *Standard 8 inch diameter (DPW)*

634C Santa Monica

Water Year from 10/1/2000 to 9/30/2001

Latitude: 34-00-43 Longitude: 118-29-27 Elevation: 94 Feet Observation Time: 1700

Day	Oct	Nov	Dec	Jan	Feb	Mar	Apr	May	Jun	Jul	Aug	Sep
1												
2												
3												
4	0.01											
5						0.76						
6						0.80						
7					0.10	0.10	0.40					
8			0.02	0.22								
9				0.01								
10	T			0.33	0.55							
11	0.05			3.25	0.02							
12				0.90	0.94							
13					2.03							
14					0.39							
15												
16												
17												
18					0.08							
19					0.67							
20												
21							0.33					
22												
23					0.12							
24				0.35	0.24							
25					0.50							
26	0.10			0.74	1.35							
27	1.07			0.25	0.14							
28					0.16							
29	0.03											
30	0.37											
31												
Totals	**1.63**	**0.00**	**0.02**	**6.05**	**7.29**	**1.66**	**0.73**	**0.00**	**0.00**	**0.00**	**0.00**	**0.00**

Water Year Total: **17.38**

NOTE: All values are in terms of inches, unless otherwise specified.

LEGEND:
- * - Unprocessed record
- E - Estimated
- I - Incomplete data
- M - Instrument malfunction
- N - No data available
- Q - Questionable
- T - Trace, unmeasurable amount of rain
-) - Include in the following total

P R E C I P I T A T I O N

DAILY PRECIPITATION SUMMARY

Gage Type: *Standard 8 inch diameter*

662D Long Beach Airport

Water Year from 10/1/2000 to 9/30/2001

Latitude: 33-49-00 Longitude: 118-09-00 Elevation: 34 Feet Observation Time: 2400

Day	Oct	Nov	Dec	Jan	Feb	Mar	Apr	May	Jun	Jul	Aug	Sep
1												
2												
3												
4	T											
5												
6	T											
7												
8												
9												
10	0.10	T										
11	0.07	T										
12	T											
13												
14												
15												
16												
17												
18												
19												
20												
21												
22												
23												
24												
25												
26	0.18											
27	1.81											
28	T											
29	0.14											
30												
31												
Totals	**2.30**	**0.00**	**0.00**	**0.00**	**0.00**	**0.00**	**0.00**	**0.00**	**0.00**	**0.00**	**0.00**	**0.00**

Water Year Total: **2.30**

NOTE: All values are in terms of inches, unless otherwise specified.

LEGEND:
- * - Unprocessed record
- E - Estimated
- I - Incomplete data
- M - Instrument malfunction
- N - No data available
- Q - Questionable
- T - Trace, unmeasurable amount of rain
-) - Include in the following total

P R E C I P I T A T I O N

DAILY PRECIPITATION SUMMARY

Gage Type: *Standard 8 inch diameter*

680B Westwood (U.C.L.A.)

Water Year from 10/1/2000 to 9/30/2001

Latitude: 34-04-10 Longitude: 118-26-30 Elevation: 430 Feet Observation Time: 1600

Day	Oct	Nov	Dec	Jan	Feb	Mar	Apr	May	Jun	Jul	Aug	Sep
1												
2												
3												
4	T											
5												
6	0.03											
7												
8												
9												
10												
11	0.03											
12												
13												
14												
15												
16												
17												
18												
19												
20												
21												
22												
23												
24												
25												
26	0.10											
27	1.05											
28	0.03											
29	0.14											
30	0.46											
31												
Totals	**1.84**	**0.00**	**0.00**	**0.00**	**0.00**	**0.00**	**0.00**	**0.00**	**0.00**	**0.00**	**0.00**	**0.00**

Water Year Total: **1.84**

NOTE: All values are in terms of inches, unless otherwise specified.

LEGEND:
- * - Unprocessed record
- E - Estimated
- I - Incomplete data
- M - Instrument malfunction
- N - No data available
- Q - Questionable
- T - Trace, unmeasurable amount of rain
-) - Include in the following total

P R E C I P I T A T I O N

DAILY PRECIPITATION SUMMARY

Gage Type: *Standard 8 inch diameter (DPW)*

683B Sunset Ridge

Water Year from 10/1/2000 to 9/30/2001

Latitude: 34-12-53 Longitude: 118-08-47 Elevation: 2110 Feet Observation Time: 0800

Day	Oct	Nov	Dec	Jan	Feb	Mar	Apr	May	Jun	Jul	Aug	Sep
1						0.10						
2							0.37					
3							0.03		0.07			
4							0.02					
5						0.56						
6				0.05		1.12				0.06		
7	0.03				0.14	0.08	1.70					
8							0.17					
9			0.02	0.09		0.18						
10			0.03		0.17	0.25	0.02					
11	0.04			3.59	0.66	T						
12			T	0.28	1.38	0.04	0.01					
13				0.17	2.93							
14					0.82							
15												
16				0.02								
17												
18												
19					0.07							
20					0.28							
21					0.01		0.92					
22												
23					0.13							
24				0.38	0.11							
25				0.10	0.68							
26	0.27			0.16	1.60	0.03						
27				0.14	0.17			0.14				
28	0.02			0.01	0.73			0.10				
29												
30	0.71											
31												
Totals	**1.07**	**0.00**	**0.05**	**4.99**	**9.88**	**2.36**	**3.24**	**0.24**	**0.07**	**0.06**	**0.00**	**0.00**

Water Year Total: **21.96**

NOTE: All values are in terms of inches, unless otherwise specified.

LEGEND:
- * - Unprocessed record
- E - Estimated
- I - Incomplete data
- M - Instrument malfunction
- N - No data available
- Q - Questionable
- T - Trace, unmeasurable amount of rain
-) - Include in the following total

P R E C I P I T A T I O N

DAILY PRECIPITATION SUMMARY

Gage Type: *Automatic recording gage (DPW)*

694G Big Tujunga Canyon-Cmp

Water Year from 10/1/2000 to 9/30/2001

Latitude: 34-17-22 Longitude: 118-17-17 Elevation: 1525 Feet Observation Time: 2400

Day	Oct	Nov	Dec	Jan	Feb	Mar	Apr	May	Jun	Jul	Aug	Sep
1												
2							0.04					
3												
4						0.40						
5						0.44						
6						1.20				0.04		
7							0.80					
8				0.08								
9						0.28	0.08					
10				1.65	0.48							
11				1.89	0.40							
12				0.20	2.24							
13					2.12							
14												
15												
16												
17												
18												
19												
20							0.32					
21							0.28					
22												
23												
24				0.47	0.52							
25					0.72							
26	0.12			0.04	0.28							
27	0.16				0.16							
28					0.20							
29	0.55											
30												
31												
Totals	**0.83**	**0.00**	**0.00**	**4.33**	**7.12**	**2.32**	**1.52**	**0.00**	**0.00**	**0.04**	**0.00**	**0.00**

Water Year Total: **16.16**

NOTE: All values are in terms of inches, unless otherwise specified.

LEGEND:
- * - Unprocessed record
- E - Estimated
- I - Incomplete data
- M - Instrument malfunction
- N - No data available
- Q - Questionable
- T - Trace, unmeasurable amount of rain
-) - Include in the following total

P R E C I P I T A T I O N

DAILY PRECIPITATION SUMMARY

Gage Type: *Standard 8 inch diameter (DPW)*

695B Tujunga Canyon-Vogel Flat

Water Year from 10/1/2000 to 9/30/2001

Latitude: 34-17-12 Longitude: 118-13-32 Elevation: 1850 Feet Observation Time: 0800

Day	Oct	Nov	Dec	Jan	Feb	Mar	Apr	May	Jun	Jul	Aug	Sep
1						0.08						
2												
3												
4												
5						1.02						
6						1.94				0.13		
7					0.04	0.06	0.68			0.09		
8							1.07					
9				0.14								
10					0.28	0.37	0.21					
11				4.71	0.77							
12				0.55	3.47							
13				0.05	3.68							
14					0.88							
15												
16				0.02								
17												
18												
19												
20					0.35							
21							1.31					
22												
23												
24					0.11							
25				0.76	0.87							
26	0.22			0.09	1.47							
27	0.31			0.24	0.05							
28	0.04				0.25							
29												
30	0.90											
31												
Totals	**1.47**	**0.00**	**0.00**	**6.56**	**12.22**	**3.47**	**3.27**	**0.00**	**0.00**	**0.22**	**0.00**	**0.00**

Water Year Total: **27.21**

NOTE: All values are in terms of inches, unless otherwise specified.

LEGEND:
- * - Unprocessed record
- E - Estimated
- I - Incomplete data
- M - Instrument malfunction
- N - No data available
- Q - Questionable
- T - Trace, unmeasurable amount of rain
-) - Include in the following total

P R E C I P I T A T I O N

DAILY PRECIPITATION SUMMARY

Gage Type: *Standard 8 inch diameter*

716 Los Angeles-Ducommun St.

Water Year from 10/1/2000 to 9/30/2001

Latitude: 34-03-09 Longitude: 118-14-13 Elevation: 306 Feet Observation Time: 2400

Day	Oct	Nov	Dec	Jan	Feb	Mar	Apr	May	Jun	Jul	Aug	Sep
1						0.11						
2												
3												
4												
5						0.08						
6						0.74						
7					0.01	0.07	0.76			0.03		
8					0.04		0.32					
9				0.21								
10												
11				3.83	0.25							
12	0.12			0.37	1.28							
13	0.10			0.05	2.01							
14					0.49							
15												
16												
17												
18												
19												
20					0.40							
21							0.36					
22							0.03					
23					0.01							
24				0.23	0.07							
25				0.13	0.79							
26				0.12	2.24							
27	0.38			0.43	0.10							
28	0.26				0.32							
29												
30												
31	0.62											
Totals	**1.48**	**0.00**	**0.00**	**5.37**	**8.01**	**1.00**	**1.47**	**0.00**	**0.00**	**0.03**	**0.00**	**0.00**

Water Year Total: **17.36**

NOTE: All values are in terms of inches, unless otherwise specified.

LEGEND:
- * - Unprocessed record
- E - Estimated
- I - Incomplete data
- M - Instrument malfunction
- N - No data available
- Q - Questionable
- T - Trace, unmeasurable amount of rain
-) - Include in the following total

P R E C I P I T A T I O N

DAILY PRECIPITATION SUMMARY

Gage Type: *Standard 8 inch diameter*

726C Angeles Crest Guard Station

Water Year from 10/1/2000 to 9/30/2001

Latitude: 34-14-01 Longitude: 118-11-04 Elevation: 2300 Feet Observation Time: 0800

Day	Oct	Nov	Dec	Jan	Feb	Mar	Apr	May	Jun	Jul	Aug	Sep
1												
2												
3												
4												
5												
6												
7	0.02											
8												
9												
10	0.01											
11	0.03											
12												
13												
14												
15												
16												
17												
18												
19												
20												
21												
22	0.01											
23												
24												
25												
26	0.32											
27	0.42											
28												
29												
30	1.25											
31												
Totals	**2.06**	**0.00**	**0.00**	**0.00**	**0.00**	**0.00**	**0.00**	**0.00**	**0.00**	**0.00**	**0.00**	**0.00**

Water Year Total: **2.06**

NOTE: All values are in terms of inches, unless otherwise specified.

LEGEND:
- * - Unprocessed record
- E - Estimated
- I - Incomplete data
- M - Instrument malfunction
- N - No data available
- Q - Questionable
- T - Trace, unmeasurable amount of rain
-) - Include in the following total

P R E C I P I T A T I O N

DAILY PRECIPITATION SUMMARY

Gage Type: *Standard 8 inch diameter*

734C Los Angeles International Airport

Water Year from 10/1/2000 to 9/30/2001

Latitude: 33-56-25 Longitude: 118-23-44 Elevation: 105 Feet Observation Time: 0700

Day	Oct	Nov	Dec	Jan	Feb	Mar	Apr	May	Jun	Jul	Aug	Sep
1												
2												
3												
4	0.03											
5												
6	0.03											
7												
8												
9												
10	T											
11	0.11											
12												
13												
14												
15												
16												
17												
18												
19												
20												
21												
22												
23												
24												
25												
26	0.17											
27	0.19											
28												
29	0.59											
30												
31												
Totals	**1.12**	**0.00**	**0.00**	**0.00**	**0.00**	**0.00**	**0.00**	**0.00**	**0.00**	**0.00**	**0.00**	**0.00**

Water Year Total: **1.12**

NOTE: All values are in terms of inches, unless otherwise specified.

LEGEND:
- * - Unprocessed record
- E - Estimated
- I - Incomplete data
- M - Instrument malfunction
- N - No data available
- Q - Questionable
- T - Trace, unmeasurable amount of rain
-) - Include in the following total

P R E C I P I T A T I O N

DAILY PRECIPITATION SUMMARY

Gage Type: *Automatic recording gage (DPW)*
735H Bell Canyon

Water Year from 10/1/2000 to 9/30/2001

Latitude: 34-11-40 Longitude: 118-39-23 Elevation: 895 Feet Observation Time: 2400

Day	Oct	Nov	Dec	Jan	Feb	Mar	Apr	May	Jun	Jul	Aug	Sep
1												
2												
3												
4						1.08						
5						2.12						
6						1.52						
7							0.80					
8				0.11								
9				0.04								
10				4.65	0.56							
11	0.08			1.85	1.08							
12				0.63	1.92							
13					3.00							
14												
15												
16												
17												
18												
19					0.32							
20							0.72					
21							0.24					
22												
23					0.08							
24				0.63	1.12							
25					2.64							
26	0.24			0.35	0.72							
27	0.31				0.32							
28					0.16							
29	0.95			0.24								
30												
31												
Totals	**1.58**	**0.00**	**0.00**	**8.50**	**11.92**	**4.72**	**1.76**	**0.00**	**0.00**	**0.00**	**0.00**	**0.00**

Water Year Total: **28.48**

NOTE: All values are in terms of inches, unless otherwise specified.

LEGEND:
* - Unprocessed record
E - Estimated
I - Incomplete data
M - Instrument malfunction
N - No data available
Q - Questionable
T - Trace, unmeasurable amount of rain
) - Include in the following total

P R E C I P I T A T I O N

DAILY PRECIPITATION SUMMARY

Gage Type: *Standard 8 inch diameter*

742C San Gabriel Fire Department

Water Year from 10/1/2000 to 9/30/2001

Latitude: 34-06-11 Longitude: 118-05-56 Elevation: 445 Feet Observation Time: 1600

Day	Oct	Nov	Dec	Jan	Feb	Mar	Apr	May	Jun	Jul	Aug	Sep
1												
2												
3												
4												
5												
6												
7												
8												
9												
10												
11	0.05											
12												
13												
14												
15												
16												
17												
18												
19												
20												
21												
22												
23												
24												
25												
26	0.33											
27												
28	0.43											
29												
30	0.48											
31												
Totals	**1.29**	**0.00**	**0.00**	**0.00**	**0.00**	**0.00**	**0.00**	**0.00**	**0.00**	**0.00**	**0.00**	**0.00**

Water Year Total: **1.29**

NOTE: All values are in terms of inches, unless otherwise specified.

LEGEND:
- * - Unprocessed record
- E - Estimated
- I - Incomplete data
- M - Instrument malfunction
- N - No data available
- Q - Questionable
- T - Trace, unmeasurable amount of rain
-) - Include in the following total

P R E C I P I T A T I O N

DAILY PRECIPITATION SUMMARY

Gage Type: *Standard 8 inch diameter*

747 Sandberg-Airways Station

Water Year from 10/1/2000 to 9/30/2001

Latitude: 34-44-47 Longitude: 118-43-29 Elevation: 4517 Feet Observation Time: 2400

Day	Oct	Nov	Dec	Jan	Feb	Mar	Apr	May	Jun	Jul	Aug	Sep
1												
2												
3												
4												
5												
6												
7												
8												
9												
10	0.33	T										
11	0.19	T										
12												
13												
14		T										
15		T										
16												
17												
18	T											
19												
20												
21	T											
22		T										
23												
24												
25												
26	0.07											
27	0.21											
28												
29	0.40											
30	T	T										
31												
Totals	**1.20**	**0.00**	**0.00**	**0.00**	**0.00**	**0.00**	**0.00**	**0.00**	**0.00**	**0.00**	**0.00**	**0.00**

Water Year Total: **1.20**

NOTE: All values are in terms of inches, unless otherwise specified.

LEGEND:
- * - Unprocessed record
- E - Estimated
- I - Incomplete data
- M - Instrument malfunction
- N - No data available
- Q - Questionable
- T - Trace, unmeasurable amount of rain
-) - Include in the following total

P R E C I P I T A T I O N

DAILY PRECIPITATION SUMMARY

Gage Type: *Standard 8 inch diameter (DPW)*

750B Palmdale-F.A.A. Airport

Water Year from 10/1/2000 to 9/30/2001

Latitude: 34-37-20 Longitude: 118-05-00 Elevation: 2528 Feet Observation Time: 0800

Day	Oct	Nov	Dec	Jan	Feb	Mar	Apr	May	Jun	Jul	Aug	Sep
1												
2												
3										0.06		
4												
5												
6						0.29						
7						0.17	)					
8							)					
9		T		0.16		0.15	0.37)					
10												
11				1.10								
12				0.02	0.25							
13					1.60							
14												
15												
16				0.02								
17												
18												
19												
20					0.05							
21												
22												
23					0.05							
24				0.03								
25				0.09								
26	0.03			0.08	0.67							
27					0.08							
28												
29				0.08								
30												
31	0.16											
Totals	**0.19**	**0.00**	**0.00**	**1.58**	**2.70**	**0.61**	**0.37**	**0.00**	**0.00**	**0.06**	**0.00**	**0.00**

Water Year Total: **5.51**

NOTE: All values are in terms of inches, unless otherwise specified.

LEGEND:
- * - Unprocessed record
- E - Estimated
- I - Incomplete data
- M - Instrument malfunction
- N - No data available
- Q - Questionable
- T - Trace, unmeasurable amount of rain
-) - Include in the following total

P R E C I P I T A T I O N

DAILY PRECIPITATION SUMMARY

Gage Type: *Standard 8 inch diameter (DPW)*

771B Pacific Palisades-Riviera Country Club

Water Year from 10/1/2000 to 9/30/2001

Latitude: 34-03-03 Longitude: 118-29-58 Elevation: 315 Feet Observation Time: 1600

Day	Oct	Nov	Dec	Jan	Feb	Mar	Apr	May	Jun	Jul	Aug	Sep
1												
2												
3												
4						0.40						
5						1.60						
6												
7							0.90					
8				0.25								
9												
10				5.10	0.90							
11				0.80	1.00							
12				0.50	3.10							
13												
14												
15												
16												
17												
18												
19					1.20							
20												
21							0.70					
22												
23					0.20							
24				0.50	0.50							
25					2.50							
26				0.40	0.20							
27					0.30							
28												
29												
30												
31												
Totals	**0.00**	**0.00**	**0.00**	**7.55**	**9.90**	**2.00**	**1.60**	**0.00**	**0.00**	**0.00**	**0.00**	**0.00**

Water Year Total: **21.05**

NOTE: All values are in terms of inches, unless otherwise specified.

LEGEND:
- * - Unprocessed record
- E - Estimated
- I - Incomplete data
- M - Instrument malfunction
- N - No data available
- Q - Questionable
- T - Trace, unmeasurable amount of rain
-) - Include in the following total

P R E C I P I T A T I O N

DAILY PRECIPITATION SUMMARY

Gage Type: *Standard 8 inch diameter*

794 Lower Franklin Reservoir

Water Year from 10/1/2000 to 9/30/2001

Latitude: 34-05-43 Longitude: 118-24-40 Elevation: 585 Feet Observation Time: 0700

Day	Oct	Nov	Dec	Jan	Feb	Mar	Apr	May	Jun	Jul	Aug	Sep
1						0.07						
2												
3												
4												
5						0.33						
6						1.36			0.01			
7						0.03	1.15					
8			0.01		0.01		0.29					
9				0.21		0.03						
10					0.68							
11				4.47	0.05							
12				0.95	2.75							
13	0.02			0.27	1.72							
14					0.61							
15												
16												
17												
18					0.07							
19												
20					0.61							
21							0.66					
22												
23												
24				0.35	0.09							
25				0.12	0.48							
26				0.25	2.42							
27	0.10			0.30	0.10							
28	0.98				0.20							
29												
30												
31	0.64											
Totals	**1.74**	**0.00**	**0.01**	**6.92**	**9.79**	**1.82**	**2.10**	**0.00**	**0.01**	**0.00**	**0.00**	**0.00**

Water Year Total: **22.39**

NOTE: All values are in terms of inches, unless otherwise specified.

LEGEND:
- * - Unprocessed record
- E - Estimated
- I - Incomplete data
- M - Instrument malfunction
- N - No data available
- Q - Questionable
- T - Trace, unmeasurable amount of rain
-) - Include in the following total

P R E C I P I T A T I O N

DAILY PRECIPITATION SUMMARY

Gage Type: *Standard 8 inch diameter*

795 Pasadena-Jourdan

Water Year from 10/1/2000 to 9/30/2001

Latitude: 34-08-52 Longitude: 118-05-14 Elevation: 705 Feet Observation Time: 0800

Day	Oct	Nov	Dec	Jan	Feb	Mar	Apr	May	Jun	Jul	Aug	Sep
1												
2							0.04					
3												
4							0.01					
5						0.35				0.09		
6				0.01	0.20	0.59						
7						0.09	1.38					
8			0.02									
9				0.60		0.13						
10					0.20	0.31						
11	0.07			3.91	1.23							
12				0.16								
13					2.81							
14												
15												
16				0.25								
17												
18					0.04							
19					0.17							
20												
21							0.63					
22												
23					0.01							
24				0.40	0.12							
25				0.01	0.72							
26	0.26			0.19	1.71							
27	0.34			0.11	0.06			0.02				
28					0.62			0.01				
29												
30	0.66											
31												
Totals	**1.33**	**0.00**	**0.02**	**5.64**	**7.89**	**1.47**	**2.06**	**0.03**	**0.00**	**0.09**	**0.00**	**0.00**

Water Year Total: **18.53**

NOTE: All values are in terms of inches, unless otherwise specified.

LEGEND:
- * - Unprocessed record
- E - Estimated
- I - Incomplete data
- M - Instrument malfunction
- N - No data available
- Q - Questionable
- T - Trace, unmeasurable amount of rain
-) - Include in the following total

P R E C I P I T A T I O N

DAILY PRECIPITATION SUMMARY

Gage Type: *Standard 8 inch diameter*

797 De Soto Reservoir

Water Year from 10/1/2000 to 9/30/2001

Latitude: 34-16-17 Longitude: 118-35-12 Elevation: 1127 Feet Observation Time: 0800

Day	Oct	Nov	Dec	Jan	Feb	Mar	Apr	May	Jun	Jul	Aug	Sep
1						0.20						
2												
3												
4												
5						0.62						
6						1.74						
7					0.03	0.03	0.54					
8							0.04					
9			0.01	0.18		0.01						
10					0.71	0.08	0.02					
11				3.58	0.14							
12	0.11			0.67	1.12							
13				0.26	2.09							
14					0.59							
15												
16												
17												
18												
19					0.10							
20					0.22							
21							0.54					
22												
23					0.02							
24				0.37	0.06							
25				0.11	0.78							
26				0.43	2.24							
27	0.02			0.28	0.05							
28	0.60				0.22							
29												
30												
31	0.59											
Totals	**1.32**	**0.00**	**0.01**	**5.88**	**8.37**	**2.68**	**1.14**	**0.00**	**0.00**	**0.00**	**0.00**	**0.00**

Water Year Total: **19.40**

NOTE: All values are in terms of inches, unless otherwise specified.

LEGEND:
- * - Unprocessed record
- E - Estimated
- I - Incomplete data
- M - Instrument malfunction
- N - No data available
- Q - Questionable
- T - Trace, unmeasurable amount of rain
-) - Include in the following total

P R E C I P I T A T I O N

DAILY PRECIPITATION SUMMARY

Gage Type: *Standard 8 inch diameter*

801B Magic Mountain

Water Year from 10/1/2000 to 9/30/2001

Latitude: 34-23-18 Longitude: 118-19-27 Elevation: 4720 Feet Observation Time: 1700

Day	Oct	Nov	Dec	Jan	Feb	Mar	Apr	May	Jun	Jul	Aug	Sep
1												
2												
3												
4												
5												
6												
7												
8					0.13							
9												
10					0.20E							
11					2.22E							
12					0.50E							
13												
14												
15					0.07E							
16					0.07E							
17												
18												
19												
20												
21												
22												
23												
24					0.54							
25												
26					0.40							
27												
28												
29												
30												
31												
Totals	**0.00**	**0.00**	**0.00**	**0.00**	**4.13**	**0.00**	**0.00**	**0.00**	**0.00**	**0.00**	**0.00**	**0.00**

Water Year Total: **4.13**

NOTE: All values are in terms of inches, unless otherwise specified.

LEGEND:
- * - Unprocessed record
- E - Estimated
- I - Incomplete data
- M - Instrument malfunction
- N - No data available
- Q - Questionable
- T - Trace, unmeasurable amount of rain
-) - Include in the following total

P R E C I P I T A T I O N

DAILY PRECIPITATION SUMMARY

Gage Type: *Standard 8 inch diameter*

802C Eagle Rock Reservoir

Water Year from 10/1/2000 to 9/30/2001

Latitude: 34-08-47 Longitude: 118-11-20 Elevation: 970 Feet Observation Time: 0700

Day	Oct	Nov	Dec	Jan	Feb	Mar	Apr	May	Jun	Jul	Aug	Sep
1												
2												
3												
4							0.02					
5						0.22	0.01					
6						0.57				0.04		
7							0.70					
8			0.01		0.01		0.47					
9				0.15		0.42						
10					1.40							
11				1.95								
12				0.27	0.28							
13				0.01	2.45							
14					0.44							
15												
16												
17												
18					0.02							
19												
20					0.20							
21							0.65					
22												
23					0.06							
24				0.26								
25				0.07	0.97							
26				0.22	1.45							
27	0.21			0.22	0.09							
28	0.37				0.46							
29												
30												
31	0.56											
Totals	**1.14**	**0.00**	**0.01**	**3.15**	**7.83**	**1.21**	**1.85**	**0.00**	**0.00**	**0.04**	**0.00**	**0.00**

Water Year Total: **15.23**

NOTE: All values are in terms of inches, unless otherwise specified.

LEGEND:
- * - Unprocessed record
- E - Estimated
- I - Incomplete data
- M - Instrument malfunction
- N - No data available
- Q - Questionable
- T - Trace, unmeasurable amount of rain
-) - Include in the following total

P R E C I P I T A T I O N

DAILY PRECIPITATION SUMMARY

Gage Type: *Standard 8 inch diameter*

807 Ascot Reservoir

Water Year from 10/1/2000 to 9/30/2001

Latitude: 34-04-46 Longitude: 118-11-14 Elevation: 620 Feet Observation Time: 0700

Day	Oct	Nov	Dec	Jan	Feb	Mar	Apr	May	Jun	Jul	Aug	Sep
1						0.10						
2												
3												
4												
5						0.08						
6						0.61				0.02		
7					0.10		0.90					
8			0.01		0.20		0.28					
9				0.21		0.05						
10					0.97							
11				3.80		0.04						
12				0.36	0.67							
13	0.09			0.10	2.25							
14					0.44							
15												
16												
17												
18					0.01							
19					0.02							
20					0.35							
21							0.63					
22												
23					0.16							
24				0.41								
25				0.01	1.12							
26				0.26	2.92							
27	0.16			0.22	0.12							
28	0.23				0.48							
29	0.03											
30	0.06											
31	0.65											
Totals	**1.22**	**0.00**	**0.01**	**5.37**	**9.81**	**0.88**	**1.81**	**0.00**	**0.00**	**0.02**	**0.00**	**0.00**

Water Year Total: **19.12**

NOTE: All values are in terms of inches, unless otherwise specified.

LEGEND:
- * - Unprocessed record
- E - Estimated
- I - Incomplete data
- M - Instrument malfunction
- N - No data available
- Q - Questionable
- T - Trace, unmeasurable amount of rain
-) - Include in the following total

P R E C I P I T A T I O N

DAILY PRECIPITATION SUMMARY

Gage Type: *Standard 8 inch diameter*

1006 San Pedro-City Reservoir

Water Year from 10/1/2000 to 9/30/2001

Latitude: 33-44-37 Longitude: 118-17-47 Elevation: 150 Feet Observation Time: 0800

Day	Oct	Nov	Dec	Jan	Feb	Mar	Apr	May	Jun	Jul	Aug	Sep
1						0.38						
2												
3												
4												
5						0.02						
6						1.20						
7						0.01	0.36			0.12		
8							0.09					
9												
10					0.08	0.16	0.08					
11	0.01				0.33	0.03						
12	0.30				0.32							
13	0.12				2.00							
14				0.35	0.30							
15					0.02							
16				2.00								
17				0.56								
18				1.51								
19					0.02			0.03				
20					0.19							
21							0.25					
22												
23												
24					0.21							
25					1.97							
26					2.69							
27					0.30							
28	2.45				0.56							
29	0.11											
30	0.01			0.12								
31	0.20			0.02								
Totals	**3.20**	**0.00**	**0.00**	**4.56**	**8.99**	**1.80**	**0.78**	**0.03**	**0.00**	**0.12**	**0.00**	**0.00**

Water Year Total: **19.48**

NOTE: All values are in terms of inches, unless otherwise specified.

LEGEND:
- * - Unprocessed record
- E - Estimated
- I - Incomplete data
- M - Instrument malfunction
- N - No data available
- Q - Questionable
- T - Trace, unmeasurable amount of rain
-) - Include in the following total

P R E C I P I T A T I O N

DAILY PRECIPITATION SUMMARY

Gage Type: *Standard 8 inch diameter (DPW)*

1011B Palos Verdes Fire Station

Water Year from 10/1/2000 to 9/30/2001

Latitude: 33-45-25 Longitude: 118-21-11 Elevation: 1275 Feet Observation Time: 1700

Day	Oct	Nov	Dec	Jan	Feb	Mar	Apr	May	Jun	Jul	Aug	Sep
1						0.03						
2												
3												
4						0.02						
5						0.80						
6	0.12			T		1.35						
7							0.68					
8				0.29								
9						)	0.20					
10				0.60	0.90	0.17)						
11	0.05			3.00	0.04							
12				1.30	0.95							
13				0.03	2.24							
14												
15												
16												
17												
18					0.17							
19					0.30							
20					0.40							
21							0.24					
22												
23				)	0.29							
24				0.26)	0.33							
25					1.90							
26				)	1.45							
27	1.67			0.96)	0.37			0.17				
28					0.50							
29	0.10											
30	0.20											
31												
Totals	**2.14**	**0.00**	**0.00**	**6.44**	**9.84**	**2.37**	**1.12**	**0.17**	**0.00**	**0.00**	**0.00**	**0.00**

Water Year Total: **22.08**

NOTE: All values are in terms of inches, unless otherwise specified.

LEGEND:
- * - Unprocessed record
- E - Estimated
- I - Incomplete data
- M - Instrument malfunction
- N - No data available
- Q - Questionable
- T - Trace, unmeasurable amount of rain
-) - Include in the following total

P R E C I P I T A T I O N

DAILY PRECIPITATION SUMMARY

Gage Type: *Standard 8 inch diameter (DPW)*

1025 Malibu Beach-Dunne

Water Year from 10/1/2000 to 9/30/2001

Latitude: 34-02-00 Longitude: 118-42-42 Elevation: 160 Feet Observation Time: 1700

Day	Oct	Nov	Dec	Jan	Feb	Mar	Apr	May	Jun	Jul	Aug	Sep
1												
2												
3												
4												
5												
6	T											
7												
8												
9												
10												
11												
12												
13												
14												
15												
16												
17												
18												
19												
20												
21												
22												
23												
24												
25												
26												
27	0.17											
28												
29												
30												
31												
Totals	**0.17**	**0.00**	**0.00**	**0.00**	**0.00**	**0.00**	**0.00**	**0.00**	**0.00**	**0.00**	**0.00**	**0.00**

Water Year Total: **0.17**

NOTE: All values are in terms of inches, unless otherwise specified.

LEGEND:
- * - Unprocessed record
- E - Estimated
- I - Incomplete data
- M - Instrument malfunction
- N - No data available
- Q - Questionable
- T - Trace, unmeasurable amount of rain
-) - Include in the following total

P R E C I P I T A T I O N

DAILY PRECIPITATION SUMMARY

Gage Type: *Standard 8 inch diameter (DPW)*

1029C Tujunga-Mill Creek Summit ranger station

Water Year from 10/1/2000 to 9/30/2001

Latitude: 34-23-22 Longitude: 118-04-49 Elevation: 4990 Feet Observation Time: 0800

Day	Oct	Nov	Dec	Jan	Feb	Mar	Apr	May	Jun	Jul	Aug	Sep
1												
2												
3												
4										T		
5						0.30						
6						3.54				0.13		
7						0.45						
8				0.30								
9												
10												
11	0.30				0.52							
12			0.01		1.43							
13					4.56							
14					0.44		0.45					
15												
16												
17												
18					0.05							
19												
20												
21												
22												
23												
24												
25	0.22											
26												
27												
28												
29												
30	0.50											
31												
Totals	**1.02**	**0.00**	**0.01**	**0.30**	**7.00**	**4.29**	**0.45**	**0.00**	**0.00**	**0.13**	**0.00**	**0.00**

Water Year Total: **13.20**

NOTE: All values are in terms of inches, unless otherwise specified.

LEGEND:
- * - Unprocessed record
- E - Estimated
- I - Incomplete data
- M - Instrument malfunction
- N - No data available
- Q - Questionable
- T - Trace, unmeasurable amount of rain
-) - Include in the following total

P R E C I P I T A T I O N

DAILY PRECIPITATION SUMMARY

Gage Type: *Standard 8 inch diameter (DPW)*

1037 Arcadia-Arboretum

Water Year from 10/1/2000 to 9/30/2001

Latitude: 34-08-48 Longitude: 118-02-59 Elevation: 565 Feet Observation Time: 1600

Day	Oct	Nov	Dec	Jan	Feb	Mar	Apr	May	Jun	Jul	Aug	Sep
1						0.01						
2							0.18		T			
3							0.01		0.10			
4							0.01					
5				T		0.13				0.11		
6	T					0.70						
7					0.25	0.02						
8				0.06								
9						0.10	0.01					
10				2.91	0.12							
11				0.44			0.01					
12				0.13	1.70	0.35						
13					2.04							
14					0.23							
15				0.04								
16												
17												
18					0.20							
19					T			T				
20					0.13							
21							0.85					
22												
23					0.15							
24				0.41	0.31							
25					0.89							
26	0.10			0.30	1.28							
27	0.43			0.01	0.32							
28	0.46			T	0.40							
29	0.11					T						
30												
31												
Totals	**1.10**	**0.00**	**0.00**	**4.30**	**8.02**	**1.31**	**1.07**	**0.00**	**0.10**	**0.11**	**0.00**	**0.00**

Water Year Total: **16.01**

NOTE: All values are in terms of inches, unless otherwise specified.

LEGEND:
- * - Unprocessed record
- E - Estimated
- I - Incomplete data
- M - Instrument malfunction
- N - No data available
- Q - Questionable
- T - Trace, unmeasurable amount of rain
-) - Include in the following total

P R E C I P I T A T I O N

DAILY PRECIPITATION SUMMARY

Gage Type: *Standard 8 inch diameter*

1041B Santa Fe Dam

Water Year from 10/1/2000 to 9/30/2001

Latitude: 34-07-04 Longitude: 117-58-24 Elevation: 427 Feet Observation Time: 1700

Day	Oct	Nov	Dec	Jan	Feb	Mar	Apr	May	Jun	Jul	Aug	Sep
1												
2												
3												
4							0.01					
5						0.01				0.05		
6						0.57						
7							1.25					
8				0.05								
9				0.01								
10				0.26	0.15	0.27						
11	0.02			3.72	0.02							
12				0.09	1.78							
13					2.44							
14					0.08							
15				0.01								
16												
17												
18												
19					0.07							
20					0.04							
21							0.82					
22												
23					0.12							
24				0.49	0.40							
25					1.05							
26	0.18			0.20	1.34							
27	0.59				0.23							
28					0.42							
29	0.12											
30	0.42											
31												
Totals	**1.33**	**0.00**	**0.00**	**4.83**	**8.14**	**0.85**	**2.08**	**0.00**	**0.00**	**0.05**	**0.00**	**0.00**

Water Year Total: **17.28**

NOTE: All values are in terms of inches, unless otherwise specified.

LEGEND:
- * - Unprocessed record
- E - Estimated
- I - Incomplete data
- M - Instrument malfunction
- N - No data available
- Q - Questionable
- T - Trace, unmeasurable amount of rain
-) - Include in the following total

P R E C I P I T A T I O N

DAILY PRECIPITATION SUMMARY

Gage Type: *Standard 8 inch diameter (DPW)*

1050F Old Topanga Canyon

Water Year from 10/1/2000 to 9/30/2001

Latitude: 34-06-24 Longitude: 118-37-43 Elevation: 1000 Feet Observation Time: 0800

Day	Oct	Nov	Dec	Jan	Feb	Mar	Apr	May	Jun	Jul	Aug	Sep
1						0.12						
2												
3												
4												
5						1.57						
6						3.88						
7						0.05						
8												
9				0.23								
10					0.63							
11				7.41								
12				1.05	3.27							
13					2.88							
14					0.35							
15												
16												
17												
18					0.93							
19												
20												
21												
22												
23												
24				0.48								
25					1.21							
26				0.52	3.28							
27	2.47			0.71	0.23							
28					0.30							
29												
30	0.94											
31												
Totals	**3.41**	**0.00**	**0.00**	**10.40**	**13.08**	**5.62**	**0.00**	**0.00**	**0.00**	**0.00**	**0.00**	**0.00**

Water Year Total: **32.51**

NOTE: All values are in terms of inches, unless otherwise specified.

LEGEND:
- * - Unprocessed record
- E - Estimated
- I - Incomplete data
- M - Instrument malfunction
- N - No data available
- Q - Questionable
- T - Trace, unmeasurable amount of rain
-) - Include in the following total

P R E C I P I T A T I O N

DAILY PRECIPITATION SUMMARY

Gage Type: *Standard 8 inch diameter*

1051B Canoga Park-Pierce College

Water Year from 10/1/2000 to 9/30/2001

Latitude: 34-10-51 Longitude: 118-34-23 Elevation: 800 Feet Observation Time: 1700

Day	Oct	Nov	Dec	Jan	Feb	Mar	Apr	May	Jun	Jul	Aug	Sep
1						0.02						
2												
3												
4						0.90						
5						1.17						
6				0.02		1.34						
7					0.03	0.01	0.56					
8				0.13								
9			0.02	0.04			0.12					
10				0.16	0.32							
11				4.62	0.07							
12				0.52	1.27							
13					4.23							
14					0.09							
15												
16												
17												
18					0.04							
19					0.12							
20					0.08							
21					0.08		0.46					
22												
23					0.05							
24				0.35	0.27							
25					0.90							
26				0.60	1.88							
27				0.07	0.14							
28					0.23							
29												
30												
31												
Totals	**0.00**	**0.00**	**0.02**	**6.51**	**9.80**	**3.44**	**1.14**	**0.00**	**0.00**	**0.00**	**0.00**	**0.00**

Water Year Total: **20.91**

NOTE: All values are in terms of inches, unless otherwise specified.

LEGEND:
- * - Unprocessed record
- E - Estimated
- I - Incomplete data
- M - Instrument malfunction
- N - No data available
- Q - Questionable
- T - Trace, unmeasurable amount of rain
-) - Include in the following total

P R E C I P I T A T I O N

DAILY PRECIPITATION SUMMARY

Gage Type: *Standard 8 inch diameter*
1058B Palmdale

Water Year from 10/1/2000 to 9/30/2001

Latitude: 34-35-17 Longitude: 118-05-31 Elevation: 2595 Feet Observation Time: 1600

Day	Oct	Nov	Dec	Jan	Feb	Mar	Apr	May	Jun	Jul	Aug	Sep
1												
2												
3										T		
4												
5												
6						0.31						
7						0.16	0.34					
8												
9				0.15			0.06					
10				0.01	0.08	0.13						
11				1.15								
12					0.39	0.03						
13					1.08							
14												
15												
16												
17					0.02							
18												
19												
20							0.43					
21												
22												
23					0.03							
24				0.10								
25				0.08	0.01							
26	0.02			0.09	0.55							
27	0.04			0.11	0.27							
28					0.08							
29												
30	0.13											
31												
Totals	**0.19**	**0.00**	**0.00**	**1.69**	**2.51**	**0.63**	**0.83**	**0.00**	**0.00**	**0.00**	**0.00**	**0.00**

Water Year Total: **5.85**

NOTE: All values are in terms of inches, unless otherwise specified.

LEGEND:
* - Unprocessed record
E - Estimated
I - Incomplete data
M - Instrument malfunction
N - No data available
Q - Questionable
T - Trace, unmeasurable amount of rain
) - Include in the following total

P R E C I P I T A T I O N

DAILY PRECIPITATION SUMMARY

Gage Type: *Automatic recording gage (DPW)*

1060B Little Rock-Sycamore Camp

Water Year from 10/1/2000 to 9/30/2001

Latitude: 34-25-02 Longitude: 117-58-13 Elevation: 4000 Feet Observation Time: 2400

Day	Oct	Nov	Dec	Jan	Feb	Mar	Apr	May	Jun	Jul	Aug	Sep
1												
2												
3												
4												
5												
6												
7												
8												
9												
10				0.76								
11				1.60								
12												
13												
14												
15												
16				0.16								
17												
18												
19												
20												
21												
22												
23												
24				0.28								
25												
26				0.16								
27				0.36								
28				0.16								
29												
30												
31												
Totals	**0.00**	**0.00**	**0.00**	**3.48**	**0.00**	**0.00**	**0.00**	**0.00**	**0.00**	**0.00**	**0.00**	**0.00**

Water Year Total: **3.48**

NOTE: All values are in terms of inches, unless otherwise specified.

LEGEND:
- * - Unprocessed record
- E - Estimated
- I - Incomplete data
- M - Instrument malfunction
- N - No data available
- Q - Questionable
- T - Trace, unmeasurable amount of rain
-) - Include in the following total

P R E C I P I T A T I O N

DAILY PRECIPITATION SUMMARY

Gage Type: *Standard 8 inch diameter (DPW)*

1070 Manhattan Beach

Water Year from 10/1/2000 to 9/30/2001

Latitude: 33-53-00 Longitude: 118-23-19 Elevation: 182 Feet Observation Time: 0800

Day	Oct	Nov	Dec	Jan	Feb	Mar	Apr	May	Jun	Jul	Aug	Sep
1						0.15						
2												
3						0.01						
4												
5						0.11						
6						1.25						
7	0.15						0.35					
8					0.14							
9				0.30								
10												
11	0.11			2.40								
12				0.52	0.91							
13				0.02	2.15			0.01				
14					0.27							
15												
16												
17												
18					0.03							
19					0.05							
20					0.17							
21							0.43					
22												
23												
24				0.22	0.49							
25												
26					2.76							
27	0.50			0.76								
28					0.34							
29	0.52											
30	0.42											
31												
Totals	**1.70**	**0.00**	**0.00**	**4.22**	**7.31**	**1.52**	**0.78**	**0.01**	**0.00**	**0.00**	**0.00**	**0.00**

Water Year Total: **15.54**

NOTE: All values are in terms of inches, unless otherwise specified.

LEGEND:
- * - Unprocessed record
- E - Estimated
- I - Incomplete data
- M - Instrument malfunction
- N - No data available
- Q - Questionable
- T - Trace, unmeasurable amount of rain
-) - Include in the following total

P R E C I P I T A T I O N

DAILY PRECIPITATION SUMMARY

Gage Type: *Standard 8 inch diameter (DPW)*

1071B Descanso Gardens

Water Year from 10/1/2000 to 9/30/2001

Latitude: 34-12-07 Longitude: 118-12-46 Elevation: 1325 Feet Observation Time: 1600

Day	Oct	Nov	Dec	Jan	Feb	Mar	Apr	May	Jun	Jul	Aug	Sep
1												
2												
3												
4												
5						0.58						
6				0.07		0.86				0.14		
7					0.06		1.37					
8				0.12			0.03					
9				0.03		0.10						
10				0.10	0.25	0.22						
11	0.13			4.10	0.04							
12				0.76	2.09							
13				0.50	2.61							
14					0.40							
15				0.04								
16												
17												
18												
19					0.23							
20					0.11							
21							0.75					
22												
23					0.17							
24				0.46	0.51							
25					0.91							
26	0.33			0.34	1.05							
27	0.39			0.33	0.32							
28					0.33							
29												
30	0.97											
31												
Totals	**1.82**	**0.00**	**0.00**	**6.85**	**9.08**	**1.76**	**2.15**	**0.00**	**0.00**	**0.14**	**0.00**	**0.00**

Water Year Total: **21.80**

NOTE: All values are in terms of inches, unless otherwise specified.

LEGEND:
- * - Unprocessed record
- E - Estimated
- I - Incomplete data
- M - Instrument malfunction
- N - No data available
- Q - Questionable
- T - Trace, unmeasurable amount of rain
-) - Include in the following total

P R E C I P I T A T I O N

DAILY PRECIPITATION SUMMARY

Gage Type: *Standard 8 inch diameter (DPW)*

1072B Little Tujunga Ranger Station

Water Year from 10/1/2000 to 9/30/2001

Latitude: 34-17-37 Longitude: 118-21-38 Elevation: 1275 Feet Observation Time: 800

Day	Oct	Nov	Dec	Jan	Feb	Mar	Apr	May	Jun	Jul	Aug	Sep
1						0.08						
2												
3												
4												
5	0.05					0.44						
6						1.27						
7						0.09						
8												
9						0.04						
10					0.47	0.12						
11					0.61							
12					1.06							
13					2.96							
14					0.72							
15												
16												
17												
18					0.05							
19												
20					0.09							
21												
22												
23					0.12							
24												
25					0.45							
26					1.24							
27					0.04							
28					0.24							
29												
30	0.80											
31												
Totals	**0.85**	**0.00**	**0.00**	**0.00**	**8.05**	**2.04**	**0.00**	**0.00**	**0.00**	**0.00**	**0.00**	**0.00**

Water Year Total: **10.94**

NOTE: All values are in terms of inches, unless otherwise specified.

LEGEND:
- * - Unprocessed record
- E - Estimated
- I - Incomplete data
- M - Instrument malfunction
- N - No data available
- Q - Questionable
- T - Trace, unmeasurable amount of rain
-) - Include in the following total

P R E C I P I T A T I O N

DAILY PRECIPITATION SUMMARY

Gage Type: *Automatic recording gage (DPW)*

1074 Little Gleason

Water Year from 10/1/2000 to 9/30/2001

Latitude: 34-22-43 Longitude: 118-08-57 Elevation: 5600 Feet Observation Time: 2400

Day	Oct	Nov	Dec	Jan	Feb	Mar	Apr	May	Jun	Jul	Aug	Sep
1						0.40						
2												
3												
4						0.24						
5						0.28						
6						1.08				0.04		
7					0.04	0.12	0.04					
8							0.96			0.04		
9				0.20								
10				0.43		0.16	0.16					
11	0.08						0.04					
12												
13				0.63								
14				0.32	0.28					0.07		
15				0.04								
16				0.04	0.68							
17												
18				0.15								
19					0.24							
20					0.24		0.04					
21							0.64					
22												
23					0.16		0.28					
24												
25				0.60	0.80							
26	0.28				0.36							
27	0.35			0.03								
28					0.56							
29	1.02			0.08								
30												
31												
Totals	**1.73**	**0.00**	**0.00**	**2.52**	**3.36**	**2.28**	**2.16**	**0.00**	**0.00**	**0.15**	**0.00**	**0.00**

Water Year Total: **12.20**

NOTE: All values are in terms of inches, unless otherwise specified.

LEGEND:
- * - Unprocessed record
- E - Estimated
- I - Incomplete data
- M - Instrument malfunction
- N - No data available
- Q - Questionable
- T - Trace, unmeasurable amount of rain
-) - Include in the following total

P R E C I P I T A T I O N

DAILY PRECIPITATION SUMMARY

Gage Type: *Standard 8 inch diameter*

1076B Monte Cristo Ranger Station

Water Year from 10/1/2000 to 9/30/2001

Latitude: 34-19-42 Longitude: 118-07-20 Elevation: 3360 Feet Observation Time: 0800

Day	Oct	Nov	Dec	Jan	Feb	Mar	Apr	May	Jun	Jul	Aug	Sep
1						0.08						
2												
3												
4							T					
5						0.40						
6				0.04		0.74				0.07		
7		0.01			0.01	0.14	0.67					
8							0.53					
9		T		0.13								
10	0.02			0.01		0.13	0.11					
11	0.16			3.20	0.51							
12		T		0.29	1.40		0.04					
13				0.09	2.88							
14					0.58							
15												
16				0.04								
17												
18					0.01							
19					0.08							
20							0.05					
21					0.29		0.72					
22												
23					0.08							
24					0.10							
25				0.60	0.45							
26	0.11			0.09	1.19							
27	0.09			0.20	0.01							
28	0.14			0.04	0.35							
29												
30	0.60											
31	0.01											
Totals	**1.13**	**0.01**	**0.00**	**4.73**	**7.94**	**1.49**	**2.12**	**0.00**	**0.00**	**0.07**	**0.00**	**0.00**

Water Year Total: **17.49**

NOTE: All values are in terms of inches, unless otherwise specified.

LEGEND:
- * - Unprocessed record
- E - Estimated
- I - Incomplete data
- M - Instrument malfunction
- N - No data available
- Q - Questionable
- T - Trace, unmeasurable amount of rain
-) - Include in the following total

P R E C I P I T A T I O N

DAILY PRECIPITATION SUMMARY

Gage Type: *Standard 8 inch diameter*

1081B Glendale-Gregg

Water Year from 10/1/2000 to 9/30/2001

Latitude: 34-11-45 Longitude: 118-14-30 Elevation: 1350 Feet Observation Time: 1700

Day	Oct	Nov	Dec	Jan	Feb	Mar	Apr	May	Jun	Jul	Aug	Sep
1												
2							0.06					
3									0.01			
4	0.01					T	0.02			T		
5				T		0.56				0.01		
6	0.01			0.05		0.72				0.10		
7			T			0.01	1.44					
8			0.01	0.16								
9						0.04						
10	0.05			0.40	0.45	0.32	0.07					
11	0.01			3.18	0.05	0.01						
12				0.55	1.90			T				
13					2.42			T				
14					0.33							
15				T								
16												
17												
18					0.01							
19					0.27							
20												
21							0.64					
22												
23					0.12							
24				0.50	0.36							
25					0.84							
26	0.24			0.33	1.06							
27	0.44			0.11	0.34			0.01				
28					0.33							
29	0.24											
30	0.76											
31												
Totals	**1.76**	**0.00**	**0.01**	**5.28**	**8.48**	**1.66**	**2.23**	**0.01**	**0.01**	**0.11**	**0.00**	**0.00**

Water Year Total: **19.55**

NOTE: All values are in terms of inches, unless otherwise specified.

LEGEND:
- * - Unprocessed record
- E - Estimated
- I - Incomplete data
- M - Instrument malfunction
- N - No data available
- Q - Questionable
- T - Trace, unmeasurable amount of rain
-) - Include in the following total

P R E C I P I T A T I O N

DAILY PRECIPITATION SUMMARY

Gage Type: *Standard 8 inch diameter (DPW)*

1087 Green-Verdugo Pumping Plant

Water Year from 10/1/2000 to 9/30/2001

Latitude: 34-15-25 Longitude: 118-20-11 Elevation: 1340 Feet Observation Time: 0800

Day	Oct	Nov	Dec	Jan	Feb	Mar	Apr	May	Jun	Jul	Aug	Sep
1						0.15						
2												
3												
4												
5						0.52	0.01					
6				0.03		1.52				0.03		
7					0.02	0.01	0.44			0.01		
8							0.45					
9				0.17		0.02	0.01					
10					0.42	0.34						
11				2.01	0.47							
12				0.42	1.19							
13				0.21	3.03							
14					0.79							
15					0.01							
16				0.01								
17												
18					0.02							
19					0.02							
20	0.01				0.05							
21							0.76					
22												
23					0.09							
24				0.44	0.01							
25				0.07	0.41							
26				0.22	1.36							
27	0.01			0.18	0.01							
28	0.36				0.28							
29												
30												
31	0.57											
Totals	**0.95**	**0.00**	**0.00**	**3.76**	**8.18**	**2.56**	**1.67**	**0.00**	**0.00**	**0.04**	**0.00**	**0.00**

Water Year Total: **17.16**

NOTE: All values are in terms of inches, unless otherwise specified.

LEGEND:
- * - Unprocessed record
- E - Estimated
- I - Incomplete data
- M - Instrument malfunction
- N - No data available
- Q - Questionable
- T - Trace, unmeasurable amount of rain
-) - Include in the following total

P R E C I P I T A T I O N

DAILY PRECIPITATION SUMMARY

Gage Type: *Standard 8 inch diameter (DPW)*

1088B La Habra Heights-Mutual Water Co.

Water Year from 10/1/2000 to 9/30/2001

Latitude: 33-56-55 Longitude: 117-57-51 Elevation: 445 Feet Observation Time: 0800

Day	Oct	Nov	Dec	Jan	Feb	Mar	Apr	May	Jun	Jul	Aug	Sep
1						0.09						
2												
3												
4												
5							0.02					
6						0.37						
7						0.07						
8							0.76					
9				0.22								
10						0.07	0.04					
11	0.14			2.99								
12	0.01		0.01	0.29	1.10		0.01					
13		0.01		0.04	2.58							
14					0.43							
15												
16												
17												
18												
19												
20					0.44							
21												
22												
23					0.17		0.45					
24				0.39	0.16							
25				0.15	0.39							
26				0.25	2.03							
27	1.24			0.34	0.11							
28				0.01	0.53							
29												
30	0.42											
31												
Totals	**1.81**	**0.01**	**0.01**	**4.68**	**7.94**	**0.60**	**1.28**	**0.00**	**0.00**	**0.00**	**0.00**	**0.00**

Water Year Total: **16.33**

NOTE: All values are in terms of inches, unless otherwise specified.

LEGEND:
- * - Unprocessed record
- E - Estimated
- I - Incomplete data
- M - Instrument malfunction
- N - No data available
- Q - Questionable
- T - Trace, unmeasurable amount of rain
-) - Include in the following total

P R E C I P I T A T I O N

DAILY PRECIPITATION SUMMARY

Gage Type: *Standard 8 inch diameter*

1095 Orange County Reservoir

Water Year from 10/1/2000 to 9/30/2001

Latitude: 33-56-07 Longitude: 117-52-58 Elevation: 660 Feet Observation Time: 1700

Day	Oct	Nov	Dec	Jan	Feb	Mar	Apr	May	Jun	Jul	Aug	Sep
1												
2												
3									0.04			
4												
5										0.05		
6												
7							0.70					
8				0.24	0.24							
9							0.07					
10				0.22	0.32							
11	0.30	0.02		3.01	0.01							
12				0.13	1.86							
13					1.80							
14					0.08							
15												
16												
17												
18												
19					0.18							
20					0.17							
21							0.24					
22												
23					0.30							
24				0.45	0.38							
25					0.91							
26	0.05			0.57	1.13							
27	0.92				0.40			0.04				
28					0.34							
29	0.03											
30	0.28											
31												
Totals	**1.58**	**0.02**	**0.00**	**4.62**	**8.12**	**0.00**	**1.01**	**0.04**	**0.04**	**0.05**	**0.00**	**0.00**

Water Year Total: **15.48**

NOTE: All values are in terms of inches, unless otherwise specified.

LEGEND:
- * - Unprocessed record
- E - Estimated
- I - Incomplete data
- M - Instrument malfunction
- N - No data available
- Q - Questionable
- T - Trace, unmeasurable amount of rain
-) - Include in the following total

P R E C I P I T A T I O N

DAILY PRECIPITATION SUMMARY

Gage Type: *Automatic recording gage (DPW)*

1107D La Tuna Debris Basin

Water Year from 10/1/2000 to 9/30/2001

Latitude: 34-14-13 Longitude: 118-19-37 Elevation: 1160 Feet Observation Time: 2400

Day	Oct	Nov	Dec	Jan	Feb	Mar	Apr	May	Jun	Jul	Aug	Sep
1												
2												
3												
4						0.36						
5				0.04		0.56						
6						0.72						
7							0.72					
8				0.11								
9						0.28						
10				1.15	0.48							
11				1.33	0.20							
12				0.24	2.00							
13					1.60							
14												
15												
16												
17												
18	0.04											
19	0.04				0.04							
20							0.28					
21							0.20					
22												
23					0.08							
24				0.43	0.24							
25					0.88							
26					0.28							
27	0.27			0.04	0.28							
28					0.04							
29	0.52											
30												
31												
Totals	**0.87**	**0.00**	**0.00**	**3.34**	**6.12**	**1.92**	**1.20**	**0.00**	**0.00**	**0.00**	**0.00**	**0.00**

Water Year Total: **13.45**

NOTE: All values are in terms of inches, unless otherwise specified.

LEGEND:
- * - Unprocessed record
- E - Estimated
- I - Incomplete data
- M - Instrument malfunction
- N - No data available
- Q - Questionable
- T - Trace, unmeasurable amount of rain
-) - Include in the following total

P R E C I P I T A T I O N

DAILY PRECIPITATION SUMMARY

Gage Type: *Automatic recording gage (DPW)*

1113 Dominguez Water Co.

Water Year from 10/1/2000 to 9/30/2001

Latitude: 33-49-54 Longitude: 118-13-30 Elevation: 30 Feet Observation Time: 2400

Day	Oct	Nov	Dec	Jan	Feb	Mar	Apr	May	Jun	Jul	Aug	Sep
1												
2												
3												
4												
5						0.28						
6												
7						0.48	0.28					
8				0.16								
9												
10				1.14	0.28							
11	0.16				0.04							
12	0.04				0.68							
13					1.12							
14					0.68							
15												
16												
17												
18					0.04							
19					0.12							
20							0.08					
21							0.24					
22												
23					0.20							
24				0.31	0.48							
25												
26				0.04								
27	0.20											
28	0.19											
29	0.87											
30												
31												
Totals	**1.46**	**0.00**	**0.00**	**1.65**	**3.64**	**0.76**	**0.60**	**0.00**	**0.00**	**0.00**	**0.00**	**0.00**

Water Year Total: **8.11**

NOTE: All values are in terms of inches, unless otherwise specified.

LEGEND:
- * - Unprocessed record
- E - Estimated
- I - Incomplete data
- M - Instrument malfunction
- N - No data available
- Q - Questionable
- T - Trace, unmeasurable amount of rain
-) - Include in the following total

P R E C I P I T A T I O N

DAILY PRECIPITATION SUMMARY

Gage Type: *Standard 8 inch diameter*

1114B Whittier Narrows Dam

Water Year from 10/1/2000 to 9/30/2001

Latitude: 34-01-29 Longitude: 118-05-02 Elevation: 239 Feet Observation Time: 1700

Day	Oct	Nov	Dec	Jan	Feb	Mar	Apr	May	Jun	Jul	Aug	Sep
1												
2												
3												
4												
5										T		
6						0.39						
7							0.78					
8				0.12								
9				0.01								
10				0.31	0.23							
11				2.72	0.05							
12				0.18	1.24							
13					1.65							
14					0.10							
15												
16												
17												
18												
19					0.17							
20					0.19							
21							0.43					
22												
23					0.18							
24				0.66	0.32							
25					0.74							
26	0.06			0.36	1.62							
27	0.76			0.02	0.20							
28					0.50							
29	0.09											
30	0.59											
31												
Totals	**1.50**	**0.00**	**0.00**	**4.38**	**7.19**	**0.39**	**1.21**	**0.00**	**0.00**	**0.00**	**0.00**	**0.00**

Water Year Total: **14.67**

NOTE: All values are in terms of inches, unless otherwise specified.

LEGEND:
- * - Unprocessed record
- E - Estimated
- I - Incomplete data
- M - Instrument malfunction
- N - No data available
- Q - Questionable
- T - Trace, unmeasurable amount of rain
-) - Include in the following total

P R E C I P I T A T I O N

DAILY PRECIPITATION SUMMARY

Gage Type: *Standard 8 inch diameter*

1115 San Antonio Dam

Water Year from 10/1/2000 to 9/30/2001

Latitude: 34-09-24 Longitude: 117-40-20 Elevation: 2120 Feet Observation Time: 1700

Day	Oct	Nov	Dec	Jan	Feb	Mar	Apr	May	Jun	Jul	Aug	Sep
1												
2							0.13					
3									0.04			
4												
5				0.02						0.07		
6						0.74						
7					0.15	0.04	1.08					
8				0.15								
9						0.77	0.04					
10				1.97	0.34		0.05					
11	0.02			2.58								
12			0.04	0.01	2.39							
13					2.53							
14					0.09							
15				0.09								
16												
17												
18												
19					0.08							
20	)				0.11		0.05					
21	)						1.40					
22	0.03)											
23					0.31							
24				0.74	0.51							
25					0.82							
26	0.26			0.25	1.22							
27	0.48				0.54			0.11				
28					0.50			0.06				
29	0.08											
30	0.77											
31												
Totals	**1.64**	**0.00**	**0.04**	**5.81**	**9.59**	**1.55**	**2.75**	**0.17**	**0.04**	**0.07**	**0.00**	**0.00**

Water Year Total: **21.66**

NOTE: All values are in terms of inches, unless otherwise specified.

LEGEND:
- * - Unprocessed record
- E - Estimated
- I - Incomplete data
- M - Instrument malfunction
- N - No data available
- Q - Questionable
- T - Trace, unmeasurable amount of rain
-) - Include in the following total

P R E C I P I T A T I O N

DAILY PRECIPITATION SUMMARY

Gage Type: *8.81 inch diameter (DPW)*

1126A Los Angeles-East Valley

Water Year from 10/1/2000 to 9/30/2001

Latitude: 34-12-30 Longitude: 118-24-35 Elevation: 780 Feet Observation Time: 0730

Day	Oct	Nov	Dec	Jan	Feb	Mar	Apr	May	Jun	Jul	Aug	Sep
1						0.16						
2												
3												
4												
5						0.36						
6				0.05		1.47						
7						0.04	0.61					
8							0.04					
9				0.16								
10					0.63	0.03	0.02					
11				3.93	0.12							
12				0.42	1.01							
13				0.48	2.74							
14					0.81							
15												
16												
17												
18												
19					0.06							
20					0.13							
21							0.39					
22												
23					0.02							
24				0.28	0.05							
25				0.08	0.55							
26				0.12	1.56							
27	0.04			0.33	0.04							
28	1.09				0.23							
29												
30												
31	0.56											
Totals	**1.69**	**0.00**	**0.00**	**5.85**	**7.95**	**2.06**	**1.06**	**0.00**	**0.00**	**0.00**	**0.00**	**0.00**

Water Year Total: **18.61**

NOTE: All values are in terms of inches, unless otherwise specified.

LEGEND:
- * - Unprocessed record
- E - Estimated
- I - Incomplete data
- M - Instrument malfunction
- N - No data available
- Q - Questionable
- T - Trace, unmeasurable amount of rain
-) - Include in the following total

P R E C I P I T A T I O N

DAILY PRECIPITATION SUMMARY

Gage Type: *Standard 8 inch diameter (DPW)*

1129B Nicholas Canyon

Water Year from 10/1/2000 to 9/30/2001

Latitude: 34-02-52 Longitude: 118-54-57 Elevation: 340 Feet Observation Time: 1700

Day	Oct	Nov	Dec	Jan	Feb	Mar	Apr	May	Jun	Jul	Aug	Sep
1						0.01						
2												
3												0.01
4						0.32						
5						2.10						
6	0.01					2.09						
7	0.01						0.67					
8				0.18								
9												
10				0.90	0.14							
11				2.42	0.02							
12				0.89	0.56	0.01						
13					1.45							
14					0.12							
15												
16												
17												
18								0.01				
19					0.42			0.03				
20					0.02							
21							0.35					
22												
23					0.15							
24				0.37	0.47	0.01						
25					0.54			0.01				
26	0.12			0.90	0.65			0.01				
27	0.40				0.22			0.09				
28					0.11							
29	0.71						0.01					
30	0.05											
31						0.01						
Totals	**1.30**	**0.00**	**0.00**	**5.66**	**4.87**	**4.55**	**1.03**	**0.15**	**0.00**	**0.00**	**0.00**	**0.01**

Water Year Total: **17.57**

NOTE: All values are in terms of inches, unless otherwise specified.

LEGEND:
- * - Unprocessed record
- E - Estimated
- I - Incomplete data
- M - Instrument malfunction
- N - No data available
- Q - Questionable
- T - Trace, unmeasurable amount of rain
-) - Include in the following total

P R E C I P I T A T I O N

DAILY PRECIPITATION SUMMARY

Gage Type: *Standard 8 inch diameter (DPW)*

1152 Clear Creek Ranger Station

Water Year from 10/1/2000 to 9/30/2001

Latitude: 34-16-15 Longitude: 118-09-11 Elevation: 3625 Feet Observation Time: 0800

Day	Oct	Nov	Dec	Jan	Feb	Mar	Apr	May	Jun	Jul	Aug	Sep
1												
2												
3												
4												
5						0.60						
6						1.50						
7					0.12							
8						0.02						
9				0.11								
10	0.10				0.31							
11	0.08	0.08		3.46	0.33							
12				0.17	1.50							
13					2.00							
14					0.50							
15					0.40							
16												
17												
18					0.05							
19												
20					0.30							
21												
22												
23					1.00							
24				0.56	0.15							
25				0.14	0.65							
26	0.27	0.27		0.22	1.13							
27	0.31	0.31		0.12	0.20							
28	0.09	0.09		0.01	0.49							
29		0.07										
30	1.00											
31	0.03											
Totals	**1.88**	**0.82**	**0.00**	**4.79**	**9.13**	**2.12**	**0.00**	**0.00**	**0.00**	**0.00**	**0.00**	**0.00**

Water Year Total: **18.74**

NOTE: All values are in terms of inches, unless otherwise specified.

LEGEND:
- * - Unprocessed record
- E - Estimated
- I - Incomplete data
- M - Instrument malfunction
- N - No data available
- Q - Questionable
- T - Trace, unmeasurable amount of rain
-) - Include in the following total

P R E C I P I T A T I O N

DAILY PRECIPITATION SUMMARY

Gage Type: *Standard 8 inch diameter (DPW)*

1158 Torrance Municipal Airport

Water Year from 10/1/2000 to 9/30/2001

Latitude: 33-47-59 Longitude: 118-20-08 Elevation: 102 Feet Observation Time: 0330

Day	Oct	Nov	Dec	Jan	Feb	Mar	Apr	May	Jun	Jul	Aug	Sep
1												
2												
3						T						
4												
5						0.80						
6						1.00						
7							0.30					
8				0.32								
9												
10	0.06			0.20		0.03						
11	0.02			3.16								
12	0.10			0.92								
13				T								
14												
15												
16												
17												
18												
19												
20												
21							0.28					
22												
23												
24				0.21								
25												
26				0.35								
27	1.94			0.32				0.02				
28												
29	0.02											
30	0.15											
31												
Totals	**2.29**	**0.00**	**0.00**	**5.48**	**0.00**	**1.83**	**0.58**	**0.02**	**0.00**	**0.00**	**0.00**	**0.00**

Water Year Total: **10.20**

NOTE: All values are in terms of inches, unless otherwise specified.

LEGEND:
- * - Unprocessed record
- E - Estimated
- I - Incomplete data
- M - Instrument malfunction
- N - No data available
- Q - Questionable
- T - Trace, unmeasurable amount of rain
-) - Include in the following total

P R E C I P I T A T I O N

DAILY PRECIPITATION SUMMARY

Gage Type: *Standard 8 inch diameter (DPW)*

1166B Mile High Ranch

Water Year from 10/1/2000 to 9/30/2001

Latitude: 34-24-40 Longitude: 117-46-15 Elevation: 5280 Feet Observation Time: 1700

Day	Oct	Nov	Dec	Jan	Feb	Mar	Apr	May	Jun	Jul	Aug	Sep
1						T						
2												
3												
4					0.30							
5						0.42						
6						0.49						
7						0.27	0.50			0.16		
8					0.28							
9				0.59								
10					0.37		0.08					
11				2.41								
12					1.22							
13					1.65							
14												
15												
16				0.32								
17												
18												
19												
20												
21							0.25					
22					0.09							
23												
24												
25					0.35							
26	0.14											
27				0.65	1.71							
28				0.44	0.50							
29												
30	0.32											
31												
Totals	**0.46**	**0.00**	**0.00**	**4.41**	**6.47**	**1.18**	**0.83**	**0.00**	**0.00**	**0.16**	**0.00**	**0.00**

Water Year Total: **13.51**

NOTE: All values are in terms of inches, unless otherwise specified.

LEGEND:
- * - Unprocessed record
- E - Estimated
- I - Incomplete data
- M - Instrument malfunction
- N - No data available
- Q - Questionable
- T - Trace, unmeasurable amount of rain
-) - Include in the following total

P R E C I P I T A T I O N

DAILY PRECIPITATION SUMMARY

Gage Type: *Standard 8 inch diameter*

1172B Piru Canyon Above Piru Lake

Water Year from 10/1/2000 to 9/30/2001

Latitude: 34-30-48 Longitude: 118-45-24 Elevation: 1120 Feet Observation Time: 800

Day	Oct	Nov	Dec	Jan	Feb	Mar	Apr	May	Jun	Jul	Aug	Sep
1						0.57						
2												
3												
4												
5						1.45						
6						2.27						
7						0.24	1.22					
8							0.04					
9				0.04								
10					0.66	0.17	0.15					
11	0.11	0.10		3.77	0.12							
12				1.02	2.57		0.01					
13				0.04	2.46							
14					0.23							
15												
16												
17												
18					0.03							
19					0.13							
20					0.72							
21							0.59					
22												
23					0.01							
24				0.38	0.05							
25				0.05	1.05							
26	0.14			0.41	1.54							
27	0.07			0.15								
28					0.26							
29												
30	1.20											
31												
Totals	**1.52**	**0.10**	**0.00**	**5.86**	**9.83**	**4.70**	**2.01**	**0.00**	**0.00**	**0.00**	**0.00**	**0.00**

Water Year Total: **24.02**

NOTE: All values are in terms of inches, unless otherwise specified.

LEGEND:
- * - Unprocessed record
- E - Estimated
- I - Incomplete data
- M - Instrument malfunction
- N - No data available
- Q - Questionable
- T - Trace, unmeasurable amount of rain
-) - Include in the following total

P R E C I P I T A T I O N

DAILY PRECIPITATION SUMMARY

Gage Type: *Standard 8 inch diameter (DPW)*

1191 Bear Divide

Water Year from 10/1/2000 to 9/30/2001

Latitude: 34-21-35 Longitude: 118-23-37 Elevation: 2700 Feet Observation Time: 0800

Day	Oct	Nov	Dec	Jan	Feb	Mar	Apr	May	Jun	Jul	Aug	Sep
1												
2							0.06					
3												
4												
5						0.60	0.04					
6						1.92						
7					0.04					0.02		
8				0.11		0.08	1.79					
9						0.06						
10					0.37	0.07						
11	0.06			3.35								
12				0.67	2.56	0.04						
13							0.12					
14					3.70							
15												
16												
17												
18					0.05							
19												
20					0.22							
21												
22							1.27					
23												
24				0.58								
25				0.11	0.98							
26	0.11				1.34							
27	0.93				0.18							
28	0.01				0.22							
29												
30	1.05											
31												
Totals	**2.16**	**0.00**	**0.00**	**4.82**	**9.66**	**2.77**	**3.28**	**0.00**	**0.00**	**0.02**	**0.00**	**0.00**

Water Year Total: **22.71**

NOTE: All values are in terms of inches, unless otherwise specified.

LEGEND:
- * - Unprocessed record
- E - Estimated
- I - Incomplete data
- M - Instrument malfunction
- N - No data available
- Q - Questionable
- T - Trace, unmeasurable amount of rain
-) - Include in the following total

P R E C I P I T A T I O N

DAILY PRECIPITATION SUMMARY

Gage Type: *Standard 8 inch diameter (DPW)*

1193 Westlake Village

Water Year from 10/1/2000 to 9/30/2001

Latitude: 34-08-19 Longitude: 118-49-05 Elevation: 885 Feet Observation Time: 1700

Day	Oct	Nov	Dec	Jan	Feb	Mar	Apr	May	Jun	Jul	Aug	Sep
1												
2												
3												
4						0.65						
5						2.66						
6						2.80						
7												
8												
9												
10												
11												
12												
13												
14												
15												
16												
17												
18												
19												
20												
21												
22												
23												
24												
25												
26												
27												
28												
29												
30												
31												
Totals	**0.00**	**0.00**	**0.00**	**0.00**	**0.00**	**6.11**	**0.00**	**0.00**	**0.00**	**0.00**	**0.00**	**0.00**

Water Year Total: **6.11**

NOTE: All values are in terms of inches, unless otherwise specified.

LEGEND:
- * - Unprocessed record
- E - Estimated
- I - Incomplete data
- M - Instrument malfunction
- N - No data available
- Q - Questionable
- T - Trace, unmeasurable amount of rain
-) - Include in the following total

P R E C I P I T A T I O N

DAILY PRECIPITATION SUMMARY

Gage Type: *Standard 8 inch diameter (DPW)*

1194 Santa Ynez Reservoir

Water Year from 10/1/2000 to 9/30/2001

Latitude: 34-04-23 Longitude: 118-33-59 Elevation: 735 Feet Observation Time: 0730

Day	Oct	Nov	Dec	Jan	Feb	Mar	Apr	May	Jun	Jul	Aug	Sep
1						0.19						
2												
3												
4												
5						0.55	0.16					
6						1.80				0.29		
7						0.02	1.10			0.02		
8					0.04		0.08					
9				0.27			0.17					
10					0.94							
11				5.18	0.03							
12	0.05			0.77	2.10							
13	0.11			0.42	1.95							
14					0.33							
15												
16												
17												
18					0.01							
19					0.15			0.05				
20					0.90							
21							0.77					
22												
23					0.40							
24				0.36								
25					0.61							
26				0.50	2.50							
27	1.01			0.42	0.23							
28	3.05				0.30							
29												
30												
31	0.56											
Totals	**4.78**	**0.00**	**0.00**	**7.92**	**10.49**	**2.56**	**2.28**	**0.05**	**0.00**	**0.31**	**0.00**	**0.00**

Water Year Total: **28.39**

NOTE: All values are in terms of inches, unless otherwise specified.

LEGEND:
- * - Unprocessed record
- E - Estimated
- I - Incomplete data
- M - Instrument malfunction
- N - No data available
- Q - Questionable
- T - Trace, unmeasurable amount of rain
-) - Include in the following total

P R E C I P I T A T I O N

DAILY PRECIPITATION SUMMARY

Gage Type: *Standard 8 inch diameter*

1212 Lancaster Fss/Faa

Water Year from 10/1/2000 to 9/30/2001

Latitude: 34-44-00 Longitude: 118-13-00 Elevation: 2340 Feet Observation Time: 2400

Day	Oct	Nov	Dec	Jan	Feb	Mar	Apr	May	Jun	Jul	Aug	Sep
1												
2												
3												
4												
5												
6												
7												
8												
9												
10	0.01	0.01										
11												
12												
13												
14												
15												
16												
17												
18	T											
19												
20												
21												
22												
23												
24												
25												
26	0.03											
27	0.03											
28												
29	0.25											
30												
31												
Totals	**0.32**	**0.01**	**0.00**	**0.00**	**0.00**	**0.00**	**0.00**	**0.00**	**0.00**	**0.00**	**0.00**	**0.00**

Water Year Total: **0.33**

NOTE: All values are in terms of inches, unless otherwise specified.

LEGEND:
- * - Unprocessed record
- E - Estimated
- I - Incomplete data
- M - Instrument malfunction
- N - No data available
- Q - Questionable
- T - Trace, unmeasurable amount of rain
-) - Include in the following total

P R E C I P I T A T I O N

DAILY PRECIPITATION SUMMARY

Gage Type: *Standard 8 inch diameter (DPW)*

1216 Rancho Palos Verdes

Water Year from 10/1/2000 to 9/30/2001

Latitude: 33-45-10 Longitude: 118-23-32 Elevation: 780 Feet Observation Time: 0800

Day	Oct	Nov	Dec	Jan	Feb	Mar	Apr	May	Jun	Jul	Aug	Sep
1												
2												
3												
4						0.05						
5	0.03					1.90						
6	0.06					0.09	0.21					
7				0.43								
8						0.01					0.03	
9					0.37	0.11	0.03				0.01	
10			0.15	2.02	0.03	0.01						
11	0.04		0.15	0.11								
12				1.31	2.10			0.04				
13					0.32							
14												
15												
16												
17					0.10							
18												
19					0.13							
20							0.13	0.02				
21								0.01				
22					0.10			0.01				
23				0.24	0.11							
24				0.13	0.66			0.01				
25	0.03			0.24	1.42							
26	1.49			0.43	0.46			0.01				
27				0.01	0.48		0.01	0.02				
28	0.43				0.38							
29												
30												
31												
Totals	**2.08**	**0.00**	**0.30**	**4.92**	**6.66**	**2.17**	**0.38**	**0.12**	**0.00**	**0.00**	**0.04**	**0.00**

Water Year Total: **16.67**

NOTE: All values are in terms of inches, unless otherwise specified.

LEGEND:
- * - Unprocessed record
- E - Estimated
- I - Incomplete data
- M - Instrument malfunction
- N - No data available
- Q - Questionable
- T - Trace, unmeasurable amount of rain
-) - Include in the following total

P R E C I P I T A T I O N

DAILY PRECIPITATION SUMMARY

Gage Type: *Standard 8 inch diameter (DPW)*

1217 Los Angeles Country Club

Water Year from 10/1/2000 to 9/30/2001

Latitude: 34-04-10 Longitude: 118-25-17 Elevation: 380 Feet Observation Time: 0600

Day	Oct	Nov	Dec	Jan	Feb	Mar	Apr	May	Jun	Jul	Aug	Sep
1												
2												
3												
4												
5						0.33						
6						1.40						
7						0.05	0.91					
8				0.25			0.27					
9					0.39	0.03						
10				5.30	0.35							
11				0.81	1.88							
12				0.39	2.73							
13					0.44							
14												
15												
16												
17					0.05							
18												
19					0.93							
20							0.42					
21												
22												
23					0.15							
24				0.34	0.46							
25				0.27	2.36							
26	1.14			0.50	0.08							
27					0.31							
28	0.02				0.18							
29	0.63											
30												
31												
Totals	**1.79**	**0.00**	**0.00**	**7.86**	**10.31**	**1.81**	**1.60**	**0.00**	**0.00**	**0.00**	**0.00**	**0.00**

Water Year Total: **23.37**

NOTE: All values are in terms of inches, unless otherwise specified.

LEGEND:
- * - Unprocessed record
- E - Estimated
- I - Incomplete data
- M - Instrument malfunction
- N - No data available
- Q - Questionable
- T - Trace, unmeasurable amount of rain
-) - Include in the following total

P R E C I P I T A T I O N

DAILY PRECIPITATION SUMMARY

Gage Type: *8.81 inch diameter (DPW)*

1222 Northridge-Garland

Water Year from 10/1/2000 to 9/30/2001

Latitude: 34-14-17 Longitude: 118-30-59 Elevation: 911 Feet Observation Time: 1700

Day	Oct	Nov	Dec	Jan	Feb	Mar	Apr	May	Jun	Jul	Aug	Sep
1												
2												
3												
4												
5						1.42						
6						0.92				0.01		
7							0.99					
8				0.14								
9			0.01			0.02	0.04					
10				0.39	0.53	0.07						
11	0.01			3.82	0.06							
12				0.47	1.89							
13					2.28							
14					0.10							
15												
16												
17												
18					0.01							
19					0.11							
20												
21							0.60					
22												
23												
24				0.49								
25					1.26							
26				0.66	1.00							
27	1.35				1.00							
28					0.13							
29	0.41											
30	0.18											
31												
Totals	**1.95**	**0.00**	**0.01**	**5.97**	**8.37**	**2.43**	**1.63**	**0.00**	**0.00**	**0.01**	**0.00**	**0.00**

Water Year Total: **20.37**

NOTE: All values are in terms of inches, unless otherwise specified.

LEGEND:
- * - Unprocessed record
- E - Estimated
- I - Incomplete data
- M - Instrument malfunction
- N - No data available
- Q - Questionable
- T - Trace, unmeasurable amount of rain
-) - Include in the following total

P R E C I P I T A T I O N

DAILY PRECIPITATION SUMMARY

Gage Type: *8.81 inch diameter (DPW)*

1223 Woodland Hills-Sherman

Water Year from 10/1/2000 to 9/30/2001

Latitude: 34-10-06 Longitude: 118-38-57 Elevation: 1035 Feet Observation Time: 1700

Day	Oct	Nov	Dec	Jan	Feb	Mar	Apr	May	Jun	Jul	Aug	Sep
1						)	0.01					
2						)						
3						)	0.01					
4						)				T		
5						1.86)						
6	T		T	)	)	2.07				T		
7				)	)	0.02	0.51					
8			T	)	)							
9				0.18)	)		0.14					
10				0.43	)	0.03						
11	0.02			3.90	)							
12				0.84	)							
13					)							
14					4.36)							
15												
16												
17												
18					0.04							
19					0.20							
20					0.02							
21							0.38					
22												
23					0.06							
24				0.37	0.31							
25					1.13							
26				0.67	1.68							
27	0.72			0.05	0.18							
28	)				0.21							
29	)											
30	0.48)											
31												
Totals	**1.22**	**0.00**	**0.00**	**6.44**	**8.19**	**3.98**	**1.05**	**0.00**	**0.00**	**0.00**	**0.00**	**0.00**

Water Year Total: **20.88**

NOTE: All values are in terms of inches, unless otherwise specified.

LEGEND:
- * - Unprocessed record
- E - Estimated
- I - Incomplete data
- M - Instrument malfunction
- N - No data available
- Q - Questionable
- T - Trace, unmeasurable amount of rain
-) - Include in the following total

P R E C I P I T A T I O N

DAILY PRECIPITATION SUMMARY

Gage Type: *Automatic recording gage (DPW)*

1239 Malibu-Big Rock Mesa

Water Year from 10/1/2000 to 9/30/2001

Latitude: 34-02-34 Longitude: 118-37-16 Elevation: 725 Feet Observation Time: 2400

Day	Oct	Nov	Dec	Jan	Feb	Mar	Apr	May	Jun	Jul	Aug	Sep
1												
2												
3												
4						0.40						
5						1.68						
6						1.16	0.08					
7						0.04	1.12					
8				0.24								
9												
10				4.13	0.80							
11				0.75	0.44							
12				0.87	1.20							
13					1.24							
14												
15												
16												
17												
18												
19					0.64							
20					0.12		0.32					
21							0.04					
22												
23					0.12							
24				0.31	0.60							
25					1.64							
26	3.03			0.91	0.52							
27	0.55											
28					0.48							
29	0.67											
30												
31												
Totals	**4.25**	**0.00**	**0.00**	**7.21**	**7.80**	**3.28**	**1.56**	**0.00**	**0.00**	**0.00**	**0.00**	**0.00**

Water Year Total: **24.10**

NOTE: All values are in terms of inches, unless otherwise specified.

LEGEND:
- * - Unprocessed record
- E - Estimated
- I - Incomplete data
- M - Instrument malfunction
- N - No data available
- Q - Questionable
- T - Trace, unmeasurable amount of rain
-) - Include in the following total

P R E C I P I T A T I O N

DAILY PRECIPITATION SUMMARY

Gage Type: *Standard 8 inch diameter*

1240 Pearblossom-Calif.D.W.R. Booster Sta.

Water Year from 10/1/2000 to 9/30/2001

Latitude: 34-30-32 Longitude: 117-55-15 Elevation: 3050 Feet Observation Time: 0800

Day	Oct	Nov	Dec	Jan	Feb	Mar	Apr	May	Jun	Jul	Aug	Sep
1						0.02						
2												
3												
4										0.05		
5												
6						0.30				0.05		
7						0.24				0.25		
8							0.17			T		
9				0.26								
10						0.13	0.09					
11	0.05			1.30	0.03	0.01						
12				0.06	0.11							
13					1.98							
14					0.15							
15												
16				0.19								
17												
18												
19												
20												
21							0.22					
22												
23												
24												
25				0.20	0.01							
26				0.02	0.40							
27				0.10	0.23							
28				0.35	0.41							
29												
30	0.14											
31												
Totals	**0.19**	**0.00**	**0.00**	**2.48**	**3.32**	**0.70**	**0.48**	**0.00**	**0.00**	**0.35**	**0.00**	**0.00**

Water Year Total: **7.52**

NOTE: All values are in terms of inches, unless otherwise specified.

LEGEND:
- * - Unprocessed record
- E - Estimated
- I - Incomplete data
- M - Instrument malfunction
- N - No data available
- Q - Questionable
- T - Trace, unmeasurable amount of rain
-) - Include in the following total

P R E C I P I T A T I O N

DAILY PRECIPITATION SUMMARY

Gage Type: *Automatic recording gage (DPW)*

1243 Redman

Water Year from 10/1/2000 to 9/30/2001

Latitude: 34-45-52 Longitude: 117-55-30 Elevation: 2360 Feet Observation Time: 2400

Day	Oct	Nov	Dec	Jan	Feb	Mar	Apr	May	Jun	Jul	Aug	Sep
1												
2												
3												
4						0.16						
5						0.28						
6						0.80						
7						0.36	0.16			0.04		
8												
9												
10						0.04						
11												
12					0.84							
13					0.60							
14												
15												
16												
17												
18					0.04							
19					0.04							
20												
21							0.12					
22												
23												
24												
25												
26												
27												
28												
29												
30												
31						0.04						
Totals	**0.00**	**0.00**	**0.00**	**0.00**	**1.52**	**1.68**	**0.28**	**0.00**	**0.00**	**0.04**	**0.00**	**0.00**

Water Year Total: **3.52**

NOTE: All values are in terms of inches, unless otherwise specified.

LEGEND:
- * - Unprocessed record
- E - Estimated
- I - Incomplete data
- M - Instrument malfunction
- N - No data available
- Q - Questionable
- T - Trace, unmeasurable amount of rain
-) - Include in the following total

P R E C I P I T A T I O N

DAILY PRECIPITATION SUMMARY

Gage Type: *Automatic recording gage (DPW)*

1244 Lancaster-Roper

Water Year from 10/1/2000 to 9/30/2001

Latitude: 34-40-27 Longitude: 118-00-37 Elevation: 2450 Feet Observation Time: 2400

Day	Oct	Nov	Dec	Jan	Feb	Mar	Apr	May	Jun	Jul	Aug	Sep
1												
2												
3												
4												
5												
6												
7							0.16					
8												
9							0.04					
10				0.12								
11				0.64								
12			0.04									
13												
14												
15				0.04								
16												
17												
18												
19												
20							0.08					
21							0.04					
22												
23												
24				0.08								
25												
26				0.24								
27				0.16								
28				0.04								
29												
30												
31												
Totals	**0.00**	**0.00**	**0.04**	**1.32**	**0.00**	**0.00**	**0.32**	**0.00**	**0.00**	**0.00**	**0.00**	**0.00**

Water Year Total: **1.68**

NOTE: All values are in terms of inches, unless otherwise specified.

LEGEND:
- * - Unprocessed record
- E - Estimated
- I - Incomplete data
- M - Instrument malfunction
- N - No data available
- Q - Questionable
- T - Trace, unmeasurable amount of rain
-) - Include in the following total

P R E C I P I T A T I O N

DAILY PRECIPITATION SUMMARY

Gage Type: *Automatic recording gage (DPW)*

1246 Scott Ranch

Water Year from 10/1/2000 to 9/30/2001

Latitude: 34-46-59 Longitude: 118-28-10 Elevation: 2710 Feet Observation Time: 2400

Day	Oct	Nov	Dec	Jan	Feb	Mar	Apr	May	Jun	Jul	Aug	Sep
1												
2												
3												
4						0.12						
5						0.16						
6						0.32						
7						0.16	0.28					
8												
9						0.08						
10												
11												
12												
13												
14												
15												
16												
17												
18												
19							0.08					
20							0.16					
21							0.04					
22												
23												
24												
25												
26												
27												
28												
29												
30												
31												
Totals	**0.00**	**0.00**	**0.00**	**0.00**	**0.00**	**0.84**	**0.56**	**0.00**	**0.00**	**0.00**	**0.00**	**0.00**

Water Year Total: **1.40**

NOTE: All values are in terms of inches, unless otherwise specified.

LEGEND:
- * - Unprocessed record
- E - Estimated
- I - Incomplete data
- M - Instrument malfunction
- N - No data available
- Q - Questionable
- T - Trace, unmeasurable amount of rain
-) - Include in the following total

P R E C I P I T A T I O N

DAILY PRECIPITATION SUMMARY

Gage Type: *Automatic recording gage (DPW)*

1247 North Lancaster

Water Year from 10/1/2000 to 9/30/2001

Latitude: 34-45-41 Longitude: 118-07-30 Elevation: 2310 Feet Observation Time: 2400

Day	Oct	Nov	Dec	Jan	Feb	Mar	Apr	May	Jun	Jul	Aug	Sep
1												
2						0.04						
3												
4												
5												
6						0.12				0.04		
7						0.16	0.20					
8												
9						0.16						
10					0.04	0.04						
11					0.04							
12					1.04							
13					0.84							
14												
15												
16												
17												
18												
19					0.08							
20							0.12					
21							0.20					
22												
23												
24				0.04								
25					0.48							
26				0.08	0.32							
27				0.04	0.20							
28												
29												
30												
31												
Totals	**0.00**	**0.00**	**0.00**	**0.16**	**3.04**	**0.52**	**0.52**	**0.00**	**0.00**	**0.04**	**0.00**	**0.00**

Water Year Total: **4.28**

NOTE: All values are in terms of inches, unless otherwise specified.

LEGEND:
- * - Unprocessed record
- E - Estimated
- I - Incomplete data
- M - Instrument malfunction
- N - No data available
- Q - Questionable
- T - Trace, unmeasurable amount of rain
-) - Include in the following total

P R E C I P I T A T I O N

DAILY PRECIPITATION SUMMARY

Gage Type: *Automatic recording gage (DPW)*

1248 Mescal-Smith

Water Year from 10/1/2000 to 9/30/2001

Latitude: 34-28-03 Longitude: 117-42-40 Elevation: 3810 Feet Observation Time: 2400

Day	Oct	Nov	Dec	Jan	Feb	Mar	Apr	May	Jun	Jul	Aug	Sep
1												
2												
3												
4												
5												
6						0.28						
7						0.28	0.16					
8												
9						0.04						
10												
11						0.04						
12						0.04						
13												
14												
15												
16												
17												
18												
19												
20												
21				0.04			0.16					
22												
23												
24												
25												
26												
27												
28												
29												
30												
31												
Totals	**0.00**	**0.00**	**0.00**	**0.04**	**0.00**	**0.68**	**0.32**	**0.00**	**0.00**	**0.00**	**0.00**	**0.00**

Water Year Total: **1.04**

NOTE: All values are in terms of inches, unless otherwise specified.

LEGEND:
- * - Unprocessed record
- E - Estimated
- I - Incomplete data
- M - Instrument malfunction
- N - No data available
- Q - Questionable
- T - Trace, unmeasurable amount of rain
-) - Include in the following total

P R E C I P I T A T I O N

DAILY PRECIPITATION SUMMARY

Gage Type: *Automatic recording gage (DPW)*
1249 Relay

Water Year from 10/1/2000 to 9/30/2001

Latitude: 34-45-43 Longitude: 117-47-55 Elevation: 3140 Feet Observation Time: 2400

Day	Oct	Nov	Dec	Jan	Feb	Mar	Apr	May	Jun	Jul	Aug	Sep
1												
2												
3												
4												
5												
6						0.08						
7						0.32	0.04					
8												
9						0.04						
10				0.12								
11				0.96								
12								0.04				
13												
14												
15				0.04								
16				0.04								
17												
18												
19												
20												
21							0.24					
22												
23												
24				0.04								
25												
26				0.24								
27				0.20								
28												
29												
30												
31												
Totals	**0.00**	**0.00**	**0.00**	**1.64**	**0.00**	**0.44**	**0.28**	**0.04**	**0.00**	**0.00**	**0.00**	**0.00**

Water Year Total: **2.40**

NOTE: All values are in terms of inches, unless otherwise specified.

LEGEND:
* - Unprocessed record
E - Estimated
I - Incomplete data
M - Instrument malfunction
N - No data available
Q - Questionable
T - Trace, unmeasurable amount of rain
) - Include in the following total

P R E C I P I T A T I O N

DAILY PRECIPITATION SUMMARY

Gage Type: *Automatic recording gage (DPW)*
1250 Avek

Water Year from 10/1/2000 to 9/30/2001

Latitude: 34-32-21 Longitude: 117-55-23 Elevation: 2825 Feet Observation Time: 2400

Day	Oct	Nov	Dec	Jan	Feb	Mar	Apr	May	Jun	Jul	Aug	Sep
1												
2												
3												
4												
5												
6												
7							0.16					
8				0.08	0.08							
9				0.12	0.12							
10				0.24	0.24							
11				0.88	0.88							
12												
13												
14												
15												
16				0.04	0.04							
17												
18				0.08	0.08							
19				0.32	0.32							
20												
21												
22												
23				0.32	0.32							
24												
25												
26												
27												
28												
29												
30												
31												
Totals	**0.00**	**0.00**	**0.00**	**2.08**	**2.08**	**0.00**	**0.16**	**0.00**	**0.00**	**0.00**	**0.00**	**0.00**

Water Year Total: **4.32**

NOTE: All values are in terms of inches, unless otherwise specified.

LEGEND:
* - Unprocessed record
E - Estimated
I - Incomplete data
M - Instrument malfunction
N - No data available
Q - Questionable
T - Trace, unmeasurable amount of rain
) - Include in the following total

P R E C I P I T A T I O N

DAILY PRECIPITATION SUMMARY

Gage Type: *Standard 8 inch diameter*

1252 Palos Verdes Landfill

Water Year from 10/1/2000 to 9/30/2001

Latitude: 33-45-40 Longitude: 118-20-03 Elevation: 400 Feet Observation Time: 0800

Day	Oct	Nov	Dec	Jan	Feb	Mar	Apr	May	Jun	Jul	Aug	Sep
1												
2												
3												
4						0.18						
5						2.10						
6						0.09				T		
7	0.01											
8				0.36			0.48					
9							0.07					
10	0.06			3.20								
11			0.01	0.48	0.92	0.01						
12					2.62							
13					0.39							
14												
15												
16				1.00								
17												
18												
19					0.32							
20												
21												
22					0.12							
23					1.35		0.33					
24				0.26								
25	0.01			0.12	4.20							
26	2.10			0.28	0.29							
27				0.51	0.48							
28												
29												
30	0.25											
31												
Totals	**2.43**	**0.00**	**0.01**	**6.21**	**10.69**	**2.38**	**0.88**	**0.00**	**0.00**	**0.00**	**0.00**	**0.00**

Water Year Total: **22.60**

NOTE: All values are in terms of inches, unless otherwise specified.

LEGEND:
- * - Unprocessed record
- E - Estimated
- I - Incomplete data
- M - Instrument malfunction
- N - No data available
- Q - Questionable
- T - Trace, unmeasurable amount of rain
-) - Include in the following total

P R E C I P I T A T I O N

DAILY PRECIPITATION SUMMARY

Gage Type: *Standard 8 inch diameter*

1253 Carson-County Sanitation

Water Year from 10/1/2000 to 9/30/2001

Latitude: 33-48-07 Longitude: 118-16-58 Elevation: 40 Feet Observation Time: 2400

Day	Oct	Nov	Dec	Jan	Feb	Mar	Apr	May	Jun	Jul	Aug	Sep
1												
2												
3												
4						T						
5				T		0.54						
6			T			0.52	0.38					
7						0.02						
8			T	0.32								
9							0.01					
10	0.07			1.34	0.53	0.02						
11				1.19	0.04							
12				1.37	1.10							
13				T	2.13							
14												
15												
16												
17												
18												
19					0.29							
20												
21							0.02					
22												
23					0.21							
24				0.18	0.49							
25					1.95							
26	0.05			0.48	0.71							
27	1.30				0.38							
28					0.48							
29	0.34											
30												
31												
Totals	**1.76**	**0.00**	**0.00**	**4.88**	**8.31**	**1.10**	**0.41**	**0.00**	**0.00**	**0.00**	**0.00**	**0.00**

Water Year Total: **16.46**

NOTE: All values are in terms of inches, unless otherwise specified.

LEGEND:
- * - Unprocessed record
- E - Estimated
- I - Incomplete data
- M - Instrument malfunction
- N - No data available
- Q - Questionable
- T - Trace, unmeasurable amount of rain
-) - Include in the following total

P R E C I P I T A T I O N

DAILY PRECIPITATION SUMMARY

Gage Type: *Standard 8 inch diameter*

1254 Long Beach Reclamation Plant

Water Year from 10/1/2000 to 9/30/2001

Latitude: 33-48-11 Longitude: 118-05-20 Elevation: 20 Feet Observation Time: 0800

Day	Oct	Nov	Dec	Jan	Feb	Mar	Apr	May	Jun	Jul	Aug	Sep
1												
2												
3												
4												
5						0.53				T		
6						0.04	0.33					
7							0.12					
8				0.41								
9	0.12				0.01	0.36	T					
10	0.12			2.35	0.27							
11	0.03				0.40							
12				0.32	1.98							
13					0.51							
14												
15												
16												
17												
18					0.15							
19												
20	0.05						0.22					
21												
22					0.10							
23				0.16	0.21							
24				0.14	0.58							
25				0.15	2.00							
26	2.10			0.49	0.26							
27					0.57							
28					0.25							
29	0.34											
30												
31												
Totals	**2.76**	**0.00**	**0.00**	**4.02**	**7.29**	**0.93**	**0.67**	**0.00**	**0.00**	**0.00**	**0.00**	**0.00**

Water Year Total: **15.67**

NOTE: All values are in terms of inches, unless otherwise specified.

LEGEND:
- * - Unprocessed record
- E - Estimated
- I - Incomplete data
- M - Instrument malfunction
- N - No data available
- Q - Questionable
- T - Trace, unmeasurable amount of rain
-) - Include in the following total

P R E C I P I T A T I O N

DAILY PRECIPITATION SUMMARY

Gage Type: *Standard 8 inch diameter*

1255 Los Coyotes Reclamation Plant

Water Year from 10/1/2000 to 9/30/2001

Latitude: 33-53-05 Longitude: 118-06-24 Elevation: 70 Feet Observation Time: 0800

Day	Oct	Nov	Dec	Jan	Feb	Mar	Apr	May	Jun	Jul	Aug	Sep
1												
2												
3												
4												
5						0.48				0.02		
6						0.03	0.50			0.01		
7						T	0.11					
8				0.67								
9					0.33	0.04	0.03					
10	0.15	0.16		2.85	0.06							
11	0.09		0.03		0.48							
12				0.35	2.12							
13					0.31							
14												
15												
16												
17												
18												
19												
20							0.39					
21												
22					0.10							
23				0.20	0.31							
24				0.08	0.47							
25	0.01			0.10	2.51							
26	1.96			0.57	0.18							
27	0.02				0.53							
28					0.12							
29	0.58											
30												
31												
Totals	**2.81**	**0.16**	**0.03**	**4.82**	**7.52**	**0.55**	**1.03**	**0.00**	**0.00**	**0.03**	**0.00**	**0.00**

Water Year Total: **16.95**

NOTE: All values are in terms of inches, unless otherwise specified.

LEGEND:
- * - Unprocessed record
- E - Estimated
- I - Incomplete data
- M - Instrument malfunction
- N - No data available
- Q - Questionable
- T - Trace, unmeasurable amount of rain
-) - Include in the following total

P R E C I P I T A T I O N

DAILY PRECIPITATION SUMMARY

Gage Type: *Standard 8 inch diameter*

1256 South Gate Transfer Station

Water Year from 10/1/2000 to 9/30/2001

Latitude: 33-56-40 Longitude: 118-09-56 Elevation: 100 Feet Observation Time: 0800

Day	Oct	Nov	Dec	Jan	Feb	Mar	Apr	May	Jun	Jul	Aug	Sep
1												
2												
3												
4												
5						0.59						
6						0.05						
7							0.48					
8				0.30			0.19					
9							0.01					
10	0.02			2.75	0.06							
11				0.64	0.55							
12					1.95							
13					0.47							
14												
15												
16				0.10								
17												
18					0.03							
19					0.48							
20												
21							0.20					
22												
23					0.22		0.01					
24				0.29								
25	0.78			0.06	2.48							
26				0.05	0.12							
27				0.58	0.49							
28												
29	0.82											
30												
31												
Totals	**1.62**	**0.00**	**0.00**	**4.77**	**6.85**	**0.64**	**0.89**	**0.00**	**0.00**	**0.00**	**0.00**	**0.00**

Water Year Total: **14.77**

NOTE: All values are in terms of inches, unless otherwise specified.

LEGEND:
- * - Unprocessed record
- E - Estimated
- I - Incomplete data
- M - Instrument malfunction
- N - No data available
- Q - Questionable
- T - Trace, unmeasurable amount of rain
-) - Include in the following total

P R E C I P I T A T I O N

DAILY PRECIPITATION SUMMARY

Gage Type: *Standard 8 inch diameter*

1257 San Jose Creek Reclamation Plant

Water Year from 10/1/2000 to 9/30/2001

Latitude: 34-01-55 Longitude: 118-01-16 Elevation: 275 Feet Observation Time: 0800

Day	Oct	Nov	Dec	Jan	Feb	Mar	Apr	May	Jun	Jul	Aug	Sep
1												
2												
3												
4							0.02					
5						0.40				0.05		
6						T	0.58					
7					0.02		0.28					
8				0.11								
9					0.06	0.01	0.05					
10				3.75	0.22							
11					0.90							
12				0.31	2.10							
13					0.26							
14												
15												
16												
17												
18												
19												
20							0.54					
21												
22					0.01							
23				0.39	0.14							
24				0.22	0.60							
25				0.05	2.50			0.01				
26				0.27	0.22							
27					0.58							
28					0.12							
29												
30												
31												
Totals	**0.00**	**0.00**	**0.00**	**5.10**	**7.73**	**0.41**	**1.47**	**0.01**	**0.00**	**0.05**	**0.00**	**0.00**

Water Year Total: **14.77**

NOTE: All values are in terms of inches, unless otherwise specified.

LEGEND:
- * - Unprocessed record
- E - Estimated
- I - Incomplete data
- M - Instrument malfunction
- N - No data available
- Q - Questionable
- T - Trace, unmeasurable amount of rain
-) - Include in the following total

P R E C I P I T A T I O N

DAILY PRECIPITATION SUMMARY

Gage Type: *Standard 8 inch diameter*

1258 Puente Hills Landfill

Water Year from 10/1/2000 to 9/30/2001

Latitude: 34-01-35 Longitude: 118-01-49 Elevation: 300 Feet Observation Time: 0700

Day	Oct	Nov	Dec	Jan	Feb	Mar	Apr	May	Jun	Jul	Aug	Sep
1												
2												
3							0.02					
4							0.03					
5						0.44						
6						0.07				0.09		
7					0.03		0.67					
8				0.13			0.30					
9							0.05					
10				2.93	0.05		0.03					
11				0.25	1.06	0.02						
12					2.74							
13					0.25							
14												
15												
16				0.06								
17												
18												
19					0.33							
20												
21							0.44					
22					0.15							
23					0.14							
24	0.13			0.41								
25	1.08			0.23	3.03							
26				0.17	0.22							
27				0.23	0.62							
28												
29	0.91											
30												
31												
Totals	**2.12**	**0.00**	**0.00**	**4.41**	**8.62**	**0.53**	**1.54**	**0.00**	**0.00**	**0.09**	**0.00**	**0.00**

Water Year Total: **17.31**

NOTE: All values are in terms of inches, unless otherwise specified.

LEGEND:
- * - Unprocessed record
- E - Estimated
- I - Incomplete data
- M - Instrument malfunction
- N - No data available
- Q - Questionable
- T - Trace, unmeasurable amount of rain
-) - Include in the following total

P R E C I P I T A T I O N

DAILY PRECIPITATION SUMMARY

Gage Type: *Standard 8 inch diameter*

1259 Whittier Narrows Reclamation Plant

Water Year from 10/1/2000 to 9/30/2001

Latitude: 34-03-59 Longitude: 118-03-54 Elevation: 225 Feet Observation Time: 0800

Day	Oct	Nov	Dec	Jan	Feb	Mar	Apr	May	Jun	Jul	Aug	Sep
1												
2												
3							T					
4												
5						0.41				T		
6						T	0.57					
7							0.30					
8				0.12								
9					0.03	T	0.01					
10	T			2.72	0.28							
11	0.01				1.01							
12				0.28	2.17							
13					0.35							
14												
15												
16												
17					0.01							
18												
19												
20							0.54					
21					0.07		0.02					
22												
23				0.16								
24				0.48								
25	0.08			0.12								
26	0.76			0.32								
27												
28												
29	0.69											
30												
31												
Totals	**1.54**	**0.00**	**0.00**	**4.20**	**3.92**	**0.41**	**1.44**	**0.00**	**0.00**	**0.00**	**0.00**	**0.00**

Water Year Total: **11.51**

NOTE: All values are in terms of inches, unless otherwise specified.

LEGEND:
- * - Unprocessed record
- E - Estimated
- I - Incomplete data
- M - Instrument malfunction
- N - No data available
- Q - Questionable
- T - Trace, unmeasurable amount of rain
-) - Include in the following total

P R E C I P I T A T I O N

DAILY PRECIPITATION SUMMARY

Gage Type: *Standard 8 inch diameter*

1260 Spadra Landfill

Water Year from 10/1/2000 to 9/30/2001

Latitude: 34-02-36 Longitude: 117-49-50 Elevation: 700 Feet Observation Time: 0800

Day	Oct	Nov	Dec	Jan	Feb	Mar	Apr	May	Jun	Jul	Aug	Sep
1												
2												
3							0.01					
4												
5						0.50						
6						0.05				0.08		
7					0.02							
8				0.15			0.62					
9							0.03					
10				3.00								
11				0.29	1.35	0.25	0.01					
12					2.80							
13					0.21							
14												
15												
16				0.06								
17												
18												
19					0.22							
20												
21												
22					0.08							
23							0.52					
24				0.10								
25				0.06	1.96							
26				0.09	0.07							
27				0.27	0.50							
28												
29												
30												
31												
Totals	**0.00**	**0.00**	**0.00**	**4.02**	**7.21**	**0.80**	**1.19**	**0.00**	**0.00**	**0.08**	**0.00**	**0.00**

Water Year Total: **13.30**

NOTE: All values are in terms of inches, unless otherwise specified.

LEGEND:
- * - Unprocessed record
- E - Estimated
- I - Incomplete data
- M - Instrument malfunction
- N - No data available
- Q - Questionable
- T - Trace, unmeasurable amount of rain
-) - Include in the following total

P R E C I P I T A T I O N

DAILY PRECIPITATION SUMMARY

Gage Type: *Standard 8 inch diameter*

1261 La Canada Reclamation Plant

Water Year from 10/1/2000 to 9/30/2001

Latitude: 34-13-00 Longitude: 118-11-14 Elevation: 1800 Feet Observation Time: 0800

Day	Oct	Nov	Dec	Jan	Feb	Mar	Apr	May	Jun	Jul	Aug	Sep
1							0.24					
2												
3							0.05					
4						0.48	0.03					
5						0.07	1.30			0.05		
6						0.05				0.04		
7					0.15							
8				0.18		0.06						
9						0.20						
10	0.15			3.39	0.60	0.20						
11					1.92							
12				1.27	3.40							
13					0.53							
14												
15												
16												
17												
18					0.05							
19												
20							1.12					
21												
22					0.04							
23				0.17	0.39							
24				0.33	0.39							
25	0.25			0.30	1.65			0.03				
26	0.33			0.33	0.15			0.07				
27	0.02				0.59							
28					0.14							
29	0.81											
30												
31												
Totals	**1.56**	**0.00**	**0.00**	**5.97**	**10.00**	**1.06**	**2.74**	**0.10**	**0.00**	**0.09**	**0.00**	**0.00**

Water Year Total: **21.52**

NOTE: All values are in terms of inches, unless otherwise specified.

LEGEND:
- * - Unprocessed record
- E - Estimated
- I - Incomplete data
- M - Instrument malfunction
- N - No data available
- Q - Questionable
- T - Trace, unmeasurable amount of rain
-) - Include in the following total

P R E C I P I T A T I O N

DAILY PRECIPITATION SUMMARY

Gage Type: *Standard 8 inch diameter*

1262 Saugus Reclamation Plant

Water Year from 10/1/2000 to 9/30/2001

Latitude: 34-24-48 Longitude: 118-32-23 Elevation: 1150 Feet Observation Time: 0800

Day	Oct	Nov	Dec	Jan	Feb	Mar	Apr	May	Jun	Jul	Aug	Sep
1												
2												
3												
4						0.48						
5						1.34						
6						0.11	0.56					
7	0.03		T		0.19		0.23					
8			T	0.05								
9					0.29	0.22						
10	0.02	0.27		2.89	0.04							
11	0.12	0.06			1.29	0.13						
12	0.02			0.59	2.40							
13					0.09							
14												
15												
16												
17												
18					0.01							
19												
20							0.32					
21												
22												
23				0.21	0.02							
24				0.03	0.45							
25	0.08			0.39	1.45							
26	0.15			0.19	0.04							
27	0.10				0.34							
28					0.02							
29	0.24											
30	0.67											
31												
Totals	**1.43**	**0.33**	**0.00**	**4.35**	**6.63**	**2.28**	**1.11**	**0.00**	**0.00**	**0.00**	**0.00**	**0.00**

Water Year Total: **16.13**

NOTE: All values are in terms of inches, unless otherwise specified.

LEGEND:
- * - Unprocessed record
- E - Estimated
- I - Incomplete data
- M - Instrument malfunction
- N - No data available
- Q - Questionable
- T - Trace, unmeasurable amount of rain
-) - Include in the following total

P R E C I P I T A T I O N

DAILY PRECIPITATION SUMMARY

Gage Type: *Standard 8 inch diameter*

1263 Valencia Reclamation Plant

Water Year from 10/1/2000 to 9/30/2001

Latitude: 34-25-55 Longitude: 118-37-13 Elevation: 1000 Feet Observation Time: 0800

Day	Oct	Nov	Dec	Jan	Feb	Mar	Apr	May	Jun	Jul	Aug	Sep
1												
2												
3												
4						0.60						
5						1.26						
6						0.12	0.52					
7						T	0.13					
8				0.05								
9						T	T					
10	T	0.45		3.01	0.38	T						
11	0.03				0.97	0.24						
12				0.35	2.02							
13					0.14							
14												
15												
16												
17												
18												
19												
20							0.28					
21												
22					0.01							
23				0.30								
24				0.05	0.53							
25	0.07			0.36	1.56							
26	0.08			0.13	0.06							
27					0.29							
28					0.02							
29	0.28											
30												
31												
Totals	**0.46**	**0.45**	**0.00**	**4.25**	**5.98**	**2.22**	**0.93**	**0.00**	**0.00**	**0.00**	**0.00**	**0.00**

Water Year Total: **14.29**

NOTE: All values are in terms of inches, unless otherwise specified.

LEGEND:
- * - Unprocessed record
- E - Estimated
- I - Incomplete data
- M - Instrument malfunction
- N - No data available
- Q - Questionable
- T - Trace, unmeasurable amount of rain
-) - Include in the following total

P R E C I P I T A T I O N

DAILY PRECIPITATION SUMMARY

Gage Type: *Standard 8 inch diameter*

1264 Calabasas Landfill

Water Year from 10/1/2000 to 9/30/2001

Latitude: 34-08-25 Longitude: 118-42-35 Elevation: 800 Feet Observation Time: 0800

Day	Oct	Nov	Dec	Jan	Feb	Mar	Apr	May	Jun	Jul	Aug	Sep
1												
2												
3												
4						1.38						
5						3.35						
6						0.19						
7							0.49					
8				0.17			0.03					
9							0.04					
10				4.82	0.23							
11			0.01	0.93	1.25							
12					2.94							
13					0.25							
14												
15												
16				0.08								
17												
18					0.02							
19					0.29							
20												
21							0.50					
22					0.08							
23					0.08							
24				0.32								
25				0.04	2.63							
26	0.25			0.30	0.06							
27				0.49	0.25							
28												
29												
30	0.70											
31												
Totals	**0.95**	**0.00**	**0.01**	**7.15**	**8.08**	**4.92**	**1.06**	**0.00**	**0.00**	**0.00**	**0.00**	**0.00**

Water Year Total: **22.17**

NOTE: All values are in terms of inches, unless otherwise specified.

LEGEND:
- * - Unprocessed record
- E - Estimated
- I - Incomplete data
- M - Instrument malfunction
- N - No data available
- Q - Questionable
- T - Trace, unmeasurable amount of rain
-) - Include in the following total

P R E C I P I T A T I O N

DAILY PRECIPITATION SUMMARY

Gage Type: *Standard 8 inch diameter*

1265 Scholl Canyon Landfill

Water Year from 10/1/2000 to 9/30/2001

Latitude: 34-08-38 Longitude: 118-11-07 Elevation: 1000 Feet Observation Time: 0800

Day	Oct	Nov	Dec	Jan	Feb	Mar	Apr	May	Jun	Jul	Aug	Sep
1							0.03					
2												
3							0.01					
4						0.24						
5						0.63						
6										0.05		
7							0.81					
8				0.16			0.37					
9												
10				3.29	0.16							
11				0.72	1.66	0.25						
12					2.52							
13					0.45							
14												
15												
16				0.01								
17												
18					0.01							
19					0.22							
20												
21							0.75					
22					0.03							
23					0.07							
24				0.17								
25	0.28			0.18	2.34							
26	0.40			0.09	0.06							
27				0.40	0.46							
28												
29												
30	0.58											
31												
Totals	**1.26**	**0.00**	**0.00**	**5.02**	**7.98**	**1.12**	**1.97**	**0.00**	**0.00**	**0.05**	**0.00**	**0.00**

Water Year Total: **17.40**

NOTE: All values are in terms of inches, unless otherwise specified.

LEGEND:
- * - Unprocessed record
- E - Estimated
- I - Incomplete data
- M - Instrument malfunction
- N - No data available
- Q - Questionable
- T - Trace, unmeasurable amount of rain
-) - Include in the following total

P R E C I P I T A T I O N

DAILY PRECIPITATION SUMMARY

Gage Type: *Standard 8 inch diameter*

1266 Mission Canyon Landfill

Water Year from 10/1/2000 to 9/30/2001

Latitude: 34-08-40 Longitude: 118-28-45 Elevation: 1150 Feet Observation Time: 0800

Day	Oct	Nov	Dec	Jan	Feb	Mar	Apr	May	Jun	Jul	Aug	Sep
1												
2												
3												
4						0.56						
5						1.62						
6					0.03	0.03						
7			0.01									
8				0.15		0.04	0.83					
9												
10				4.53								
11			0.02	0.69	2.55							
12					2.60							
13					0.19							
14												
15												
16				0.10								
17												
18												
19					0.62							
20												
21												
22					0.05							
23							0.66					
24				0.40								
25	0.09			0.13	3.06							
26	1.33			0.33	0.11							
27				0.25	0.20							
28												
29												
30	0.45											
31												
Totals	**1.87**	**0.00**	**0.03**	**6.58**	**9.41**	**2.25**	**1.49**	**0.00**	**0.00**	**0.00**	**0.00**	**0.00**

Water Year Total: **21.63**

NOTE: All values are in terms of inches, unless otherwise specified.

LEGEND:
- * - Unprocessed record
- E - Estimated
- I - Incomplete data
- M - Instrument malfunction
- N - No data available
- Q - Questionable
- T - Trace, unmeasurable amount of rain
-) - Include in the following total

P R E C I P I T A T I O N

DAILY PRECIPITATION SUMMARY

Gage Type: *Standard 8 inch diameter*

1267 Lancaster Reclamation Plant

Water Year from 10/1/2000 to 9/30/2001

Latitude: 34-46-38 Longitude: 118-09-11 Elevation: 2302 Feet Observation Time: 0800

Day	Oct	Nov	Dec	Jan	Feb	Mar	Apr	May	Jun	Jul	Aug	Sep
1												
2												
3												
4												
5						0.07				0.15		
6						0.26	0.12					
7							0.11					
8												
9						0.11						
10				0.40								
11					0.48							
12					1.57							
13					0.02							
14												
15												
16												
17												
18												
19							0.05					
20							0.21					
21												
22												
23												
24					0.04							
25					0.85							
26	T				0.04							
27					0.12							
28												
29	0.27											
30												
31												
Totals	**0.27**	**0.00**	**0.00**	**0.40**	**3.12**	**0.44**	**0.49**	**0.00**	**0.00**	**0.15**	**0.00**	**0.00**

Water Year Total: **4.87**

NOTE: All values are in terms of inches, unless otherwise specified.

LEGEND:
- * - Unprocessed record
- E - Estimated
- I - Incomplete data
- M - Instrument malfunction
- N - No data available
- Q - Questionable
- T - Trace, unmeasurable amount of rain
-) - Include in the following total

P R E C I P I T A T I O N

DAILY PRECIPITATION SUMMARY

Gage Type: *Standard 8 inch diameter*

1268 Palmdale Reclamation Plant

Water Year from 10/1/2000 to 9/30/2001

Latitude: 34-35-30 Longitude: 118-05-10 Elevation: 2565 Feet Observation Time: 0800

Day	Oct	Nov	Dec	Jan	Feb	Mar	Apr	May	Jun	Jul	Aug	Sep
1												
2												
3										0.40		
4						T						
5						0.24						
6						0.16	0.09					
7							0.22			0.03		
8				0.16								
9					0.07	0.14	0.05					
10				1.11								
11					0.12	0.02						
12					1.75							
13												
14												
15												
16												
17												
18												
19					0.02							
20							0.39					
21												
22					0.05							
23				0.01								
24				0.15								
25	0.05			0.03	0.58							
26	0.02			0.13	0.03							
27	0.04				0.26							
28												
29	0.12											
30	0.13											
31												
Totals	**0.36**	**0.00**	**0.00**	**1.59**	**2.88**	**0.56**	**0.75**	**0.00**	**0.00**	**0.43**	**0.00**	**0.00**

Water Year Total: **6.57**

NOTE: All values are in terms of inches, unless otherwise specified.

LEGEND:
- * - Unprocessed record
- E - Estimated
- I - Incomplete data
- M - Instrument malfunction
- N - No data available
- Q - Questionable
- T - Trace, unmeasurable amount of rain
-) - Include in the following total

P R E C I P I T A T I O N

DAILY PRECIPITATION SUMMARY

Gage Type: *Standard 8 inch diameter*

1271 Pomona Waste Reclamation Plant

Water Year from 10/1/2000 to 9/30/2001

Latitude: 34-03-18 Longitude: 117-47-34 Elevation: 786 Feet Observation Time: 0800

Day	Oct	Nov	Dec	Jan	Feb	Mar	Apr	May	Jun	Jul	Aug	Sep
1												
2												
3							0.03					
4				0.03			0.03					
5						0.50				0.08		
6						0.03	0.47					
7						0.01	0.29					
8				0.11								
9					0.04	0.26	0.08					
10				3.71	0.23							
11			0.02		1.00							
12				0.31	2.81							
13					0.25							
14												
15												
16												
17												
18												
19					0.16							
20							0.65					
21												
22												
23					0.23							
24				0.42	0.65							
25					1.29							
26	0.80			0.31	0.04							
27	0.02				0.58							
28					0.09							
29	0.42											
30												
31												
Totals	**1.24**	**0.00**	**0.02**	**4.89**	**7.37**	**0.80**	**1.55**	**0.00**	**0.00**	**0.08**	**0.00**	**0.00**

Water Year Total: **15.95**

NOTE: All values are in terms of inches, unless otherwise specified.

LEGEND:
- * - Unprocessed record
- E - Estimated
- I - Incomplete data
- M - Instrument malfunction
- N - No data available
- Q - Questionable
- T - Trace, unmeasurable amount of rain
-) - Include in the following total

P R E C I P I T A T I O N

DAILY PRECIPITATION SUMMARY

Gage Type: *Standard 8 inch diameter*

1274 Whittier - Valna Drive

Water Year from 10/1/2000 to 9/30/2001

Latitude: 33-57-39 Longitude: 118-01-10 Elevation: 255 Feet Observation Time: 0800

Day	Oct	Nov	Dec	Jan	Feb	Mar	Apr	May	Jun	Jul	Aug	Sep
1						0.08			0.02			
2												
3									0.01			
4												
5							0.13					
6				0.01		0.41						
7						0.03	0.64					
8						T	0.20					
9	)			0.25		T	0.06					
10	)				0.25	T						
11	)			3.35								
12	)			0.26	0.96							
13	)			0.03	2.80							
14	)				0.70							
15	)											
16	0.09)											
17												
18												
19					T							
20					0.41							
21							0.44					
22												
23					0.17							
24				0.45	0.12							
25				0.21	0.38							
26	T			0.32	2.43			T				
27	1.45			0.30	0.13			0.02				
28					0.52			0.01				
29												
30	0.54											
31												
Totals	**2.08**	**0.00**	**0.00**	**5.18**	**8.87**	**0.52**	**1.47**	**0.03**	**0.03**	**0.00**	**0.00**	**0.00**

Water Year Total: **18.18**

NOTE: All values are in terms of inches, unless otherwise specified.

LEGEND:
- * - Unprocessed record
- E - Estimated
- I - Incomplete data
- M - Instrument malfunction
- N - No data available
- Q - Questionable
- T - Trace, unmeasurable amount of rain
-) - Include in the following total

P R E C I P I T A T I O N

DAILY PRECIPITATION SUMMARY

Gage Type: *Automatic recording gage (DPW)*

1277 DPW Headquarters, Fremont

Water Year from 10/1/2000 to 9/30/2001

Latitude: 34-05-12 Longitude: 118-09-01 Elevation: 450 Feet Observation Time: 2400

Day	Oct	Nov	Dec	Jan	Feb	Mar	Apr	May	Jun	Jul	Aug	Sep
1												
2												
3												
4						0.04						
5												
6						0.36						
7					0.08		1.12					
8				0.08								
9						0.04						
10				2.13	0.28							
11	0.04			1.61	0.24							
12				0.24	2.40							
13					1.28							
14												
15												
16												
17												
18												
19					0.24							
20					0.04		0.24					
21							0.24					
22												
23					0.12							
24				0.39	0.36							
25					2.12							
26	0.16			0.55	0.48							
27	0.23				0.28							
28					0.28							
29	0.67											
30												
31												
Totals	**1.10**	**0.00**	**0.00**	**5.00**	**8.20**	**0.44**	**1.60**	**0.00**	**0.00**	**0.00**	**0.00**	**0.00**

Water Year Total: **16.34**

NOTE: All values are in terms of inches, unless otherwise specified.

LEGEND:
- * - Unprocessed record
- E - Estimated
- I - Incomplete data
- M - Instrument malfunction
- N - No data available
- Q - Questionable
- T - Trace, unmeasurable amount of rain
-) - Include in the following total

P R E C I P I T A T I O N

DAILY PRECIPITATION SUMMARY

Gage Type: *Standard 8 inch diameter (DPW)*

1278 La Canada Flintridge

Water Year from 10/1/2000 to 9/30/2001

Latitude: 34-13-22 Longitude: 118-12-17 Elevation: Feet Observation Time: 0800

Day	Oct	Nov	Dec	Jan	Feb	Mar	Apr	May	Jun	Jul	Aug	Sep
1												
2							0.28					
3												
4	0.01											
5				0.02		0.69				0.06		
6	0.03			0.06		1.09				0.14		
7			0.01		0.55		1.65					
8			0.04									
9			0.01			0.27						
10	0.02			0.58	0.60	0.34						
11	0.02			3.66	0.10							
12			0.01	1.20	2.79							
13					3.00							
14					0.54							
15				0.17								
16				0.02								
17												
18					0.10							
19					0.33							
20												
21	0.01						0.83					
22												
23					0.20							
24				0.52	0.60							
25					1.12							
26	0.39				0.66							
27					0.35			0.20				
28					0.25							
29	0.83											
30	0.60											
31												
Totals	**1.91**	**0.00**	**0.07**	**6.23**	**11.19**	**2.39**	**2.76**	**0.20**	**0.00**	**0.20**	**0.00**	**0.00**

Water Year Total: **24.95**

NOTE: All values are in terms of inches, unless otherwise specified.

LEGEND:
- * - Unprocessed record
- E - Estimated
- I - Incomplete data
- M - Instrument malfunction
- N - No data available
- Q - Questionable
- T - Trace, unmeasurable amount of rain
-) - Include in the following total

APPENDIX B

HYDROLOGIC REPORT 2000 – 2001

RUNOFF - STREAM GAGING STATION INFORMATION

RUNOFF - STREAM GAGING STATION INFORMATION

ALHAMBRA WASH

above Klingerman Street

STATION NO. F81D-R

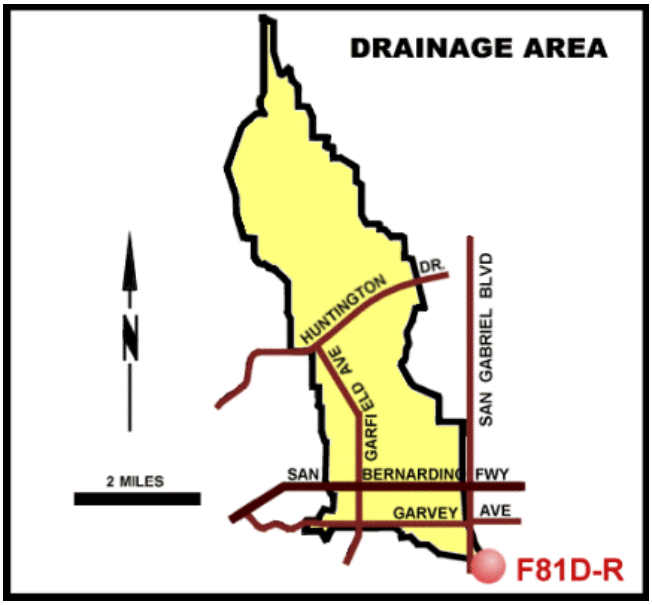

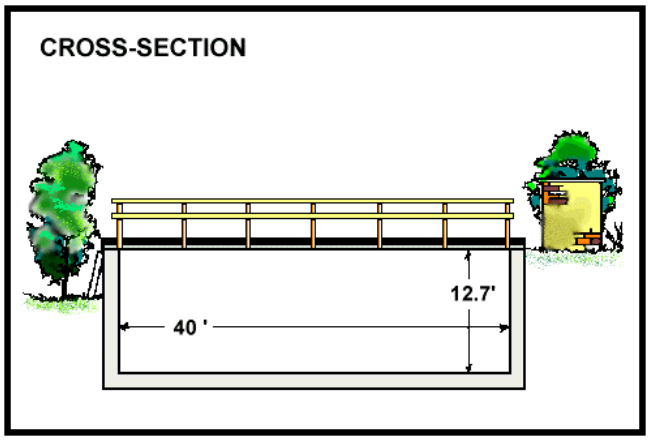

RECORDER 5 min. interval data logger.
METHOD OF MEASUREMENT wading or from footbridge.
DRAINAGE AREA 15.20 square miles.
LOCATION 250 feet *above* Klingerman Street and 2650 feet *below* Garvey Avenue, South San Gabriel
REGULATION none.
DIVERSION none.
CHANNEL concrete, rectangular in section, 40.0 feet wide by 12.7 feet deep.
CONTROL channel forms control.
LENGTH OF RECORD at Station F81-R, January 14, 1930 to September 30, 1934; at Station F81B-R, October 1, 1934 to February 25, 1935; at Station F81C-R February 25, 1935 to April 27, 1936; at Station F81B-R April 27, 1936 to May 22, 1936; at Station F81D-R, September 2, 1936 to date.

RUNOFF - STREAM GAGING STATION INFORMATION

ARCADIA WASH
below Grand Avenue
STATION NO. F317-R

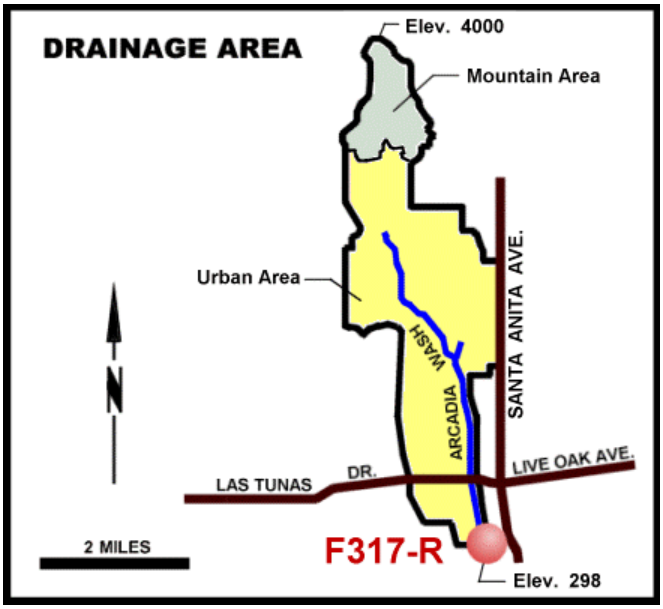

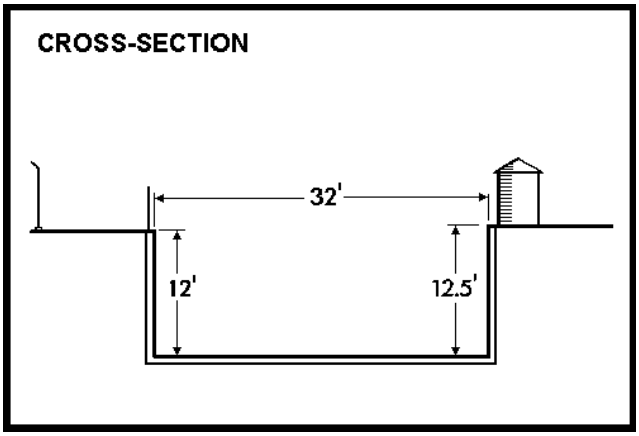

RECORDER 5 min. interval data logger.
METHOD OF MEASUREMENT low flows measured by wading. High flows measured from upstream side of Grand Avenue bridge.
DRAINAGE AREA 8.50 square miles.
LOCATION on the west wall of Arcadia Wash about 75 feet downstream from centerline of Grand Avenue.
REGULATION several debris basins located upstream.
DIVERSION none.
CHANNEL concrete, rectangular section.
CONTROL LENGTH OF RECORD December 12, 1955 to date.

RUNOFF - STREAM GAGING STATION INFORMATION

AZUSA CONDUIT
(Sandbox 20' weir)
STATION NO. F250-R

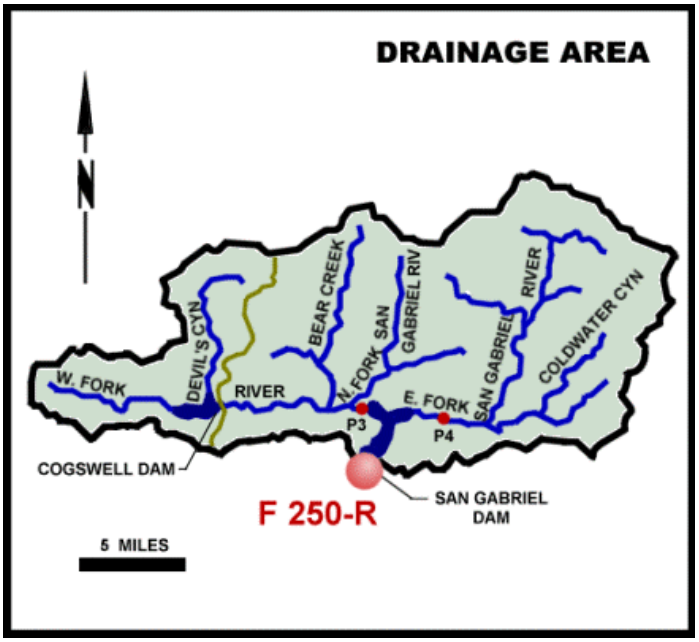

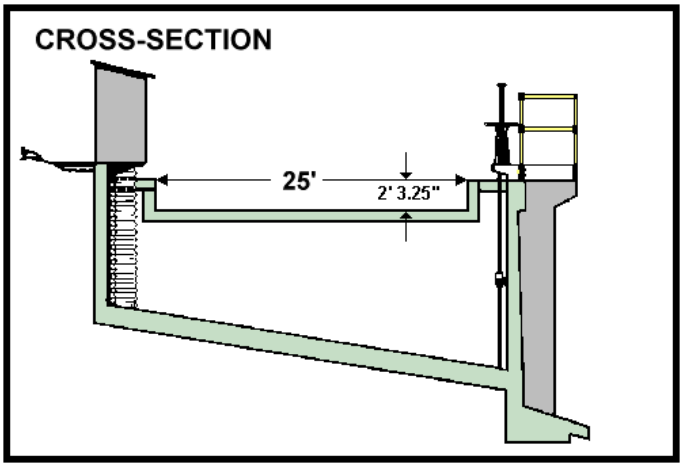

RECORDER 5 min. interval data logger.
METHOD OF MEASUREMENT weir formula with gage height observation.
DRAINAGE AREA 202.70 square miles.
LOCATION on the concrete conduit which diverts from San Gabriel Dam, 160 feet below the dam.
REGULATION regulated in section.
DIVERSION none.
CHANNEL 25-foot concrete weir.
CONTROL channel forms control.
LENGTH OF RECORD February 26, 1933 to date.
REMARKS approximate capacity 95 second-feet.

RUNOFF - STREAM GAGING STATION INFORMATION

BALLONA CREEK
above Sawtelle Blvd.
STATION NO. F38C-R

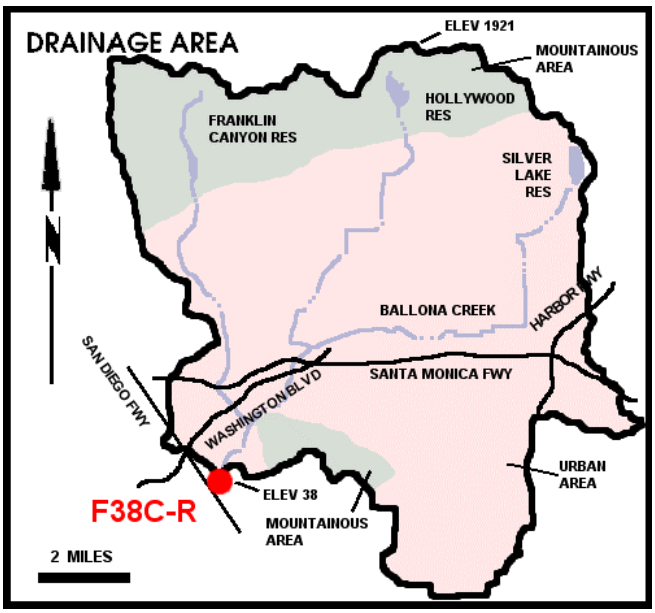

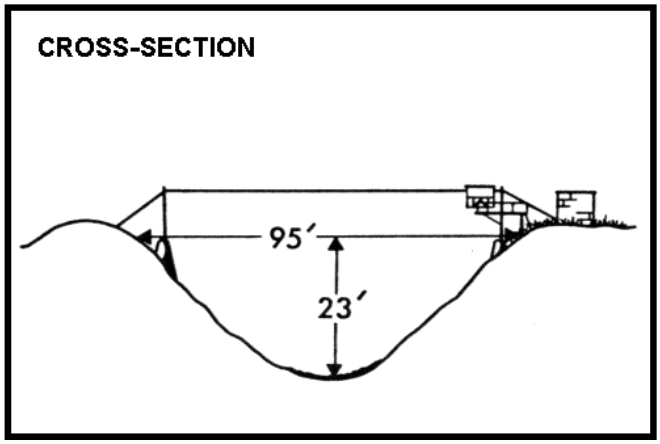

RECORDER continuous water stage.
METHOD OF MEASUREMENT wading or from cable car.
DRAINAGE AREA 88.60 square miles.
LOCATION 530.0 feet above Sawtelle Boulevard, 1.5 miles southwest of Culver City.
REGULATION Stone Canyon Reservoir prior to January, 1951. Upper and Lower Franklin Canyon Reservoir, Hollywood Reservoir, and Silverlake Reservoir.
DIVERSION none.
CHANNEL concrete ruble, trapezoidal in section.
CONTROL channel forms control.
LENGTH OF RECORD at station F38-R, February 27, 1928 to April 27, 1936; at Station F38B-R, May 14, 1936 to August 10, 1967; at Station F38C-R, August 10, 1967 to date.

RUNOFF - STREAM GAGING STATION INFORMATION

BOUQUET CANYON CREEK
@ Urbandale Avenue
STATION NO. F377-R

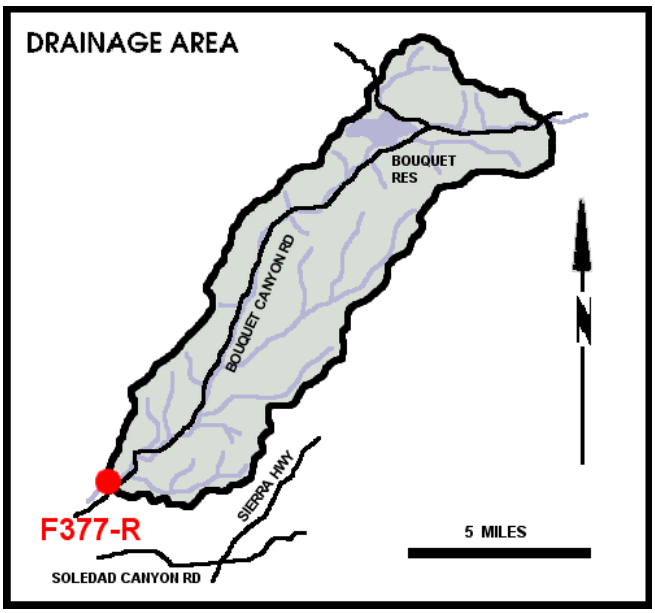

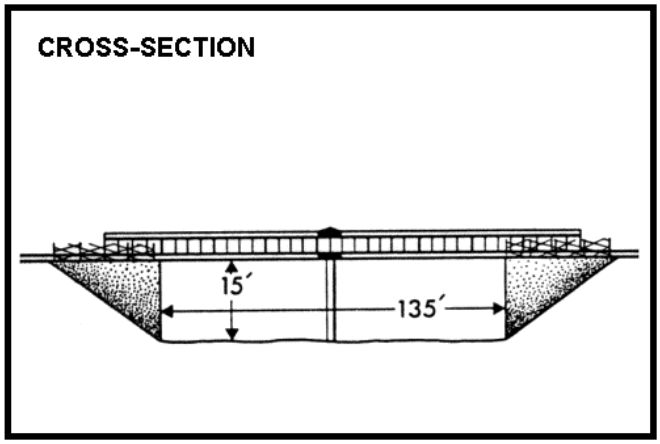

RECORDER continuous water stage.
METHOD OF MEASUREMENT wading or from bridge.
DRAINAGE AREA 51.90 square miles.
LOCATION Bouquet Canyon Creek @ Urbandale Avenue, 3.5 miles northeast of Saugus.
REGULATION Bouquet Reservoir.
DIVERSION none.
CHANNEL concrete sides with natural bottom, trapezoidal in section.
CONTROL concrete stabilizer.
LENGTH OF RECORD October 11, 1967 to date.

RUNOFF - STREAM GAGING STATION INFORMATION

BRADBURY CHANNEL

below Central Avenue

STATION NO. F329-R

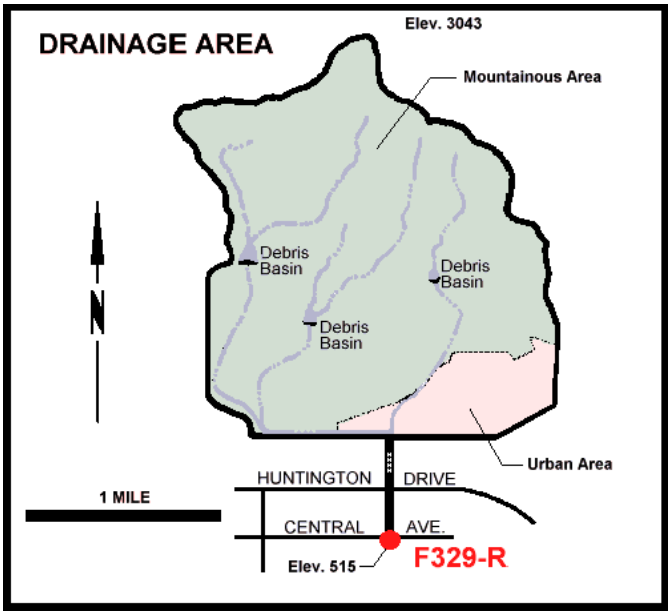

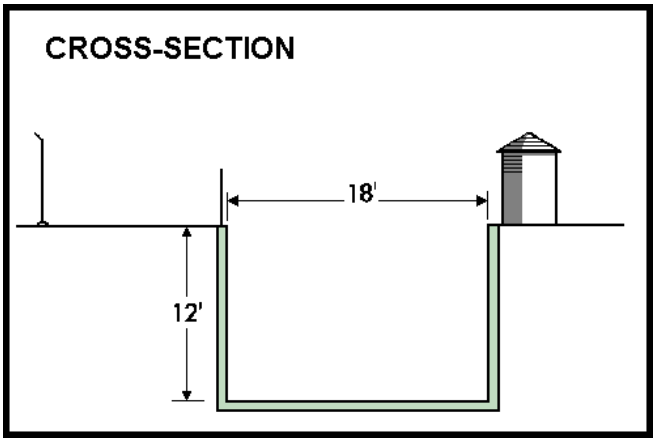

RECORDER 5 min. interval data logger.
METHOD OF MEASUREMENT low flows measured by wading. High flows measured from footbridge four feet downstream from recorder.
DRAINAGE AREA 3.30 square miles.
LOCATION on the east wall of Bradury Channel, 200 feet downstream from the centerline of Central Avenue, one mile east of Darte.
REGULATION two debris basins located upstream.
DIVERSION none.
CHANNEL rectangular concrete, 18 feet wide, 12 feet deep.
CONTROL channel forms control.
LENGTH OF RECORD June 14, 1957 to date.

RUNOFF - STREAM GAGING STATION INFORMATION

BRANFORD STREET CHANNEL

below Sharp Avenue

STATION NO. F342-R

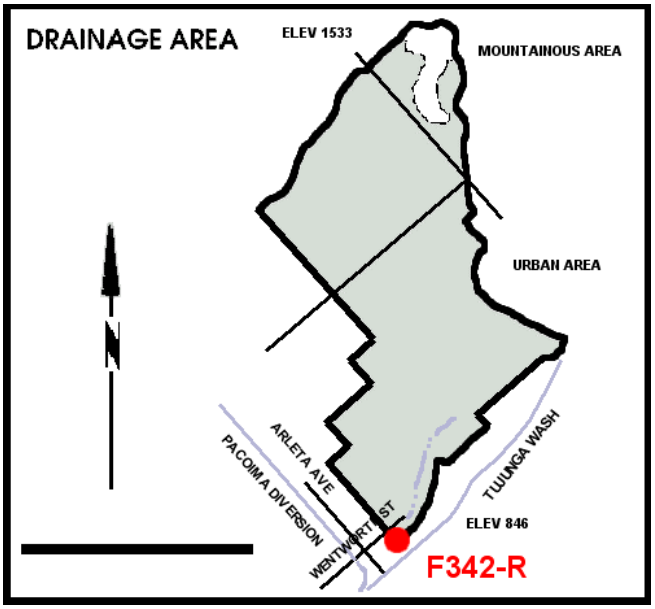

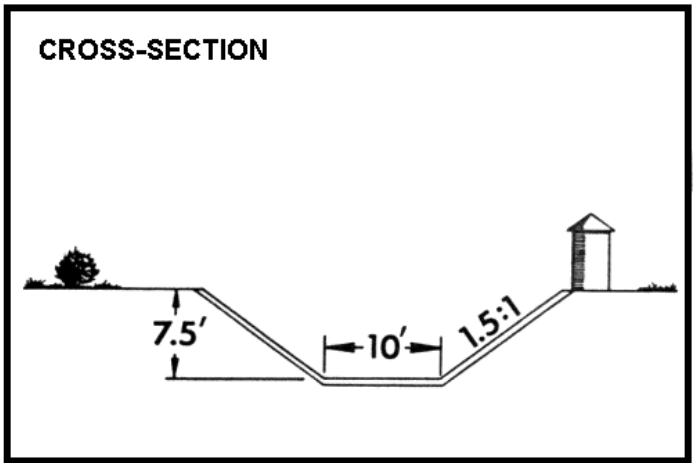

RECORDER 15 min. punch tape.
METHOD OF MEASUREMENT low flows measured by wading. High flows measured by floats.
DRAINAGE AREA 5.01 square miles.
LOCATION on the south bank of channel, 125 feet downstream from Sharp Avenue, about 3.6 miles south of San Fernando.
REGULATION flow from Lopez Creek is diverted to Hansen Dam at the mouth of Lopez Canyon.
DIVERSION none.
CHANNEL trapezoidal, 10 feet wide at bottom and 7.5 feet deep with 1.5 to 1 side slopes.
CONTROL channel forms control.
LENGTH OF RECORD January 12, 1962 to date.

RUNOFF - STREAM GAGING STATION INFORMATION

BURBANK WESTERN STORM DRAIN
@ Riverside Drive
STATION NO. E285-R

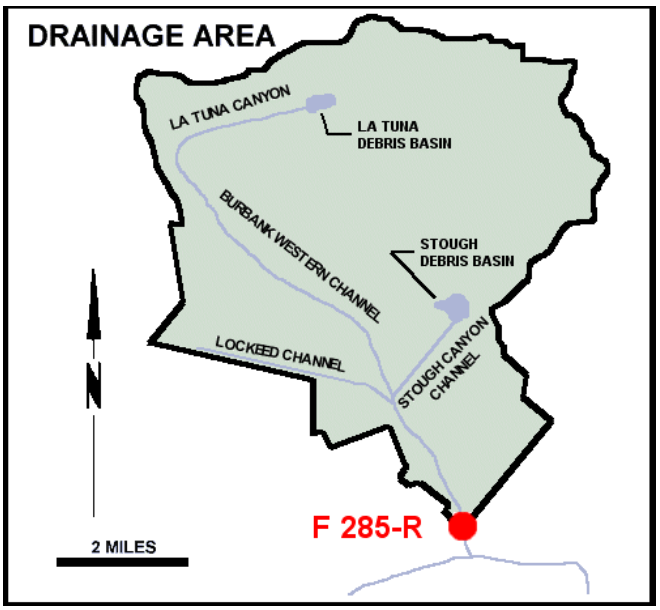

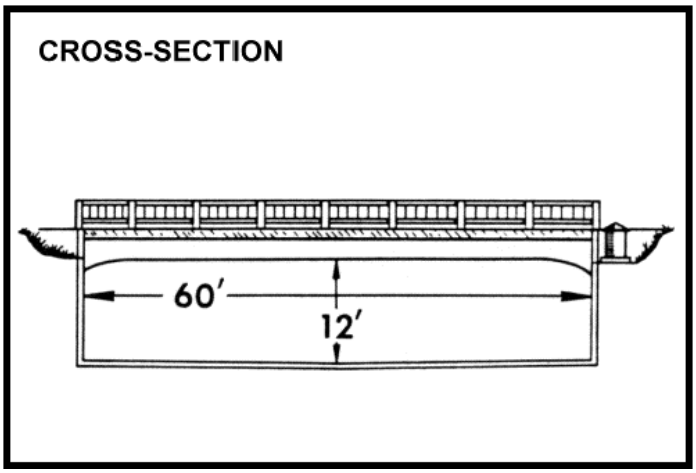

RECORDER continuous water stage.
METHOD OF MEASUREMENT wading or from bridge.
DRAINAGE AREA 25 square miles.
LOCATION 20 feet upstream from Riverside Drive, Glendale.
REGULATION several debris basins on tributaries.
DIVERSION none.
CHANNEL concrete, rectangular section.
CONTROL channel forms control.
LENGTH OF RECORD October 1, 1949 to date.
REMARKS operated in cooperation with the USCE.

RUNOFF - STREAM GAGING STATION INFORMATION

COMPTON CREEK

near Greenleaf Drive

STATION NO. F37B-R

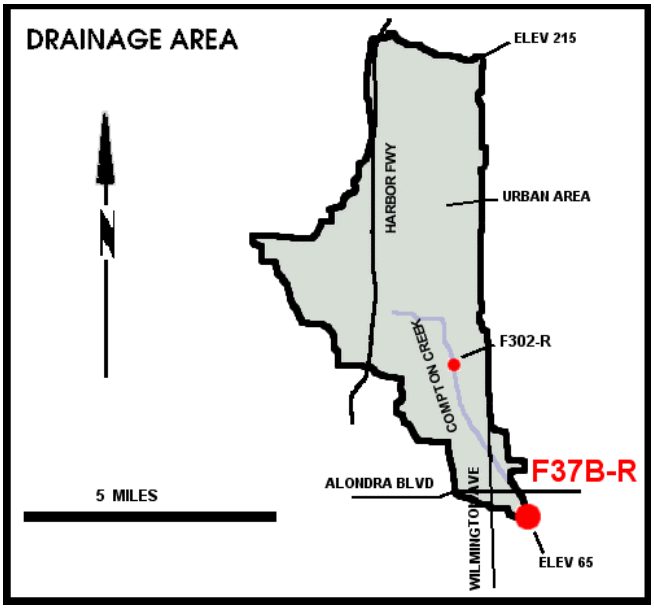

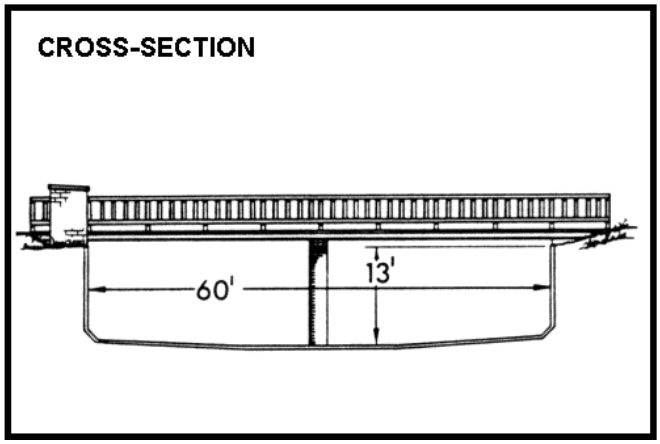

RECORDER continuous water stage.
METHOD OF MEASUREMENT wading or from bridge.
DRAINAGE AREA 22.60 square miles.
LOCATION 120.0 feet above Greenleaf Boulevard, 1.5 miles south west of Compton.
REGULATION none.
DIVERSION none.
CHANNEL concrete, rectangular in section, 60 feet wide by 13 feet deep.
CONTROL channel forms control.
LENGTH OF RECORD at Station F37-R, January 22, 1928 to June 9, 1938; at Station F37B-R, October 3, 1938 to date.

RUNOFF - STREAM GAGING STATION INFORMATION

COYOTE CREEK
below Spring Street
STATION NO. F354-R

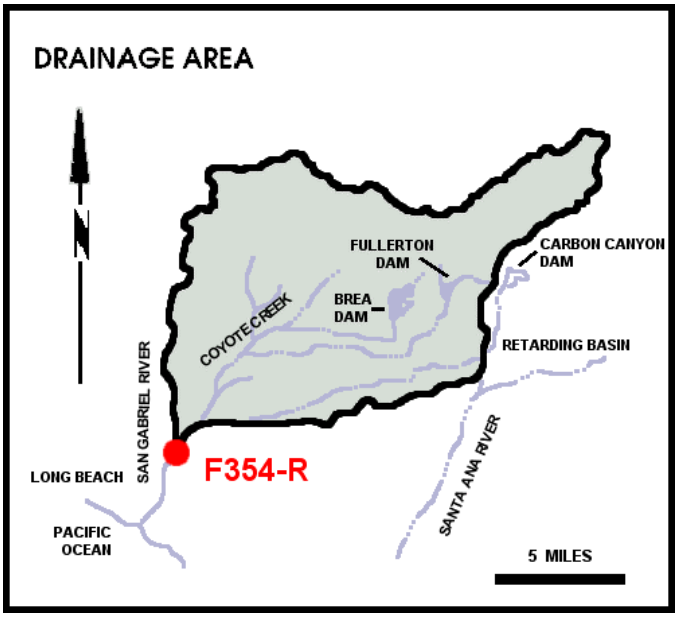

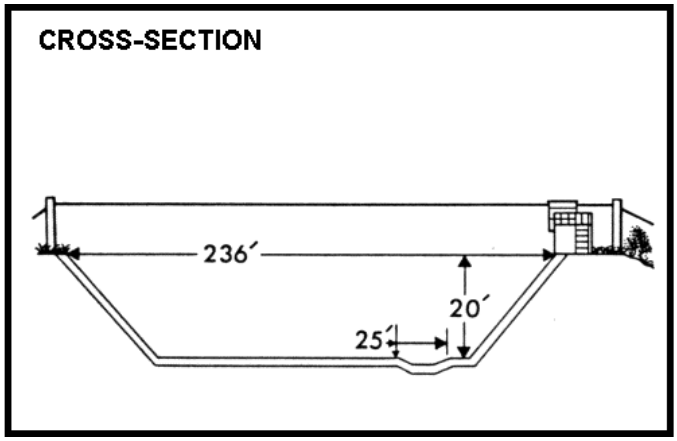

RECORDER continuous water stage.
METHOD OF MEASUREMENT wading or from cable car.
DRAINAGE AREA 185 square miles.
LOCATION 241 feet below Spring Street, 5.7 miles northeast of Long Beach.
REGULATION partially regulated by Fullerton Dam, Brea Dam, and Carbon Canyon Dam.
DIVERSION none.
CHANNEL concrete, trapezoidal in section.
CONTROL channel forms control.
LENGTH OF RECORD December 19, 1936 to date.
REMARKS previous gaging station for record correlation: Station F41-S, December 1, 1928 to January 14, 1930; Station F41-R, January 14, 1930 to October 30, 1936; Station F41B-R, October 30, 1936 to February 17, 1937; Station F41C-R, February 18, 1937 to February 8, 1956; Station F320-R, February 9, 1956 to July 2, 1965.

RUNOFF - STREAM GAGING STATION INFORMATION

DALTON WASH
@ Merced Avenue
STATION NO. F274B-R

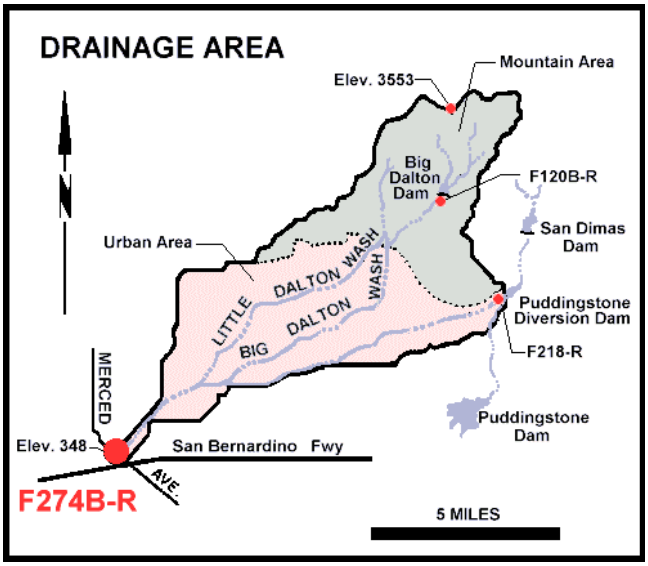

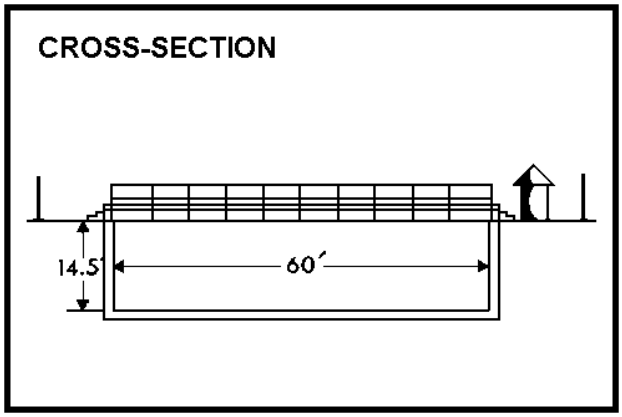

RECORDER 5 min. interval data logger.
METHOD OF MEASUREMENT low flows measured by wading. High flows measured from footbridge 100 feet from station.
DRAINAGE AREA 35.95 square miles.
LOCATION on the west bank and upstream of Merced Avenue about 150 feet, about one-half miles above the junction with Walnut Wash and about one mile south of Baldwin Park.
REGULATION partly regulated by Big Dalton Dam, San Dimas Dam, Puddingstone Diversion Dam, Big Dalton Spreading Grounds, Little Dalton Spreading Grounds, Big Dalton Debris Basin, Little Debris Basin and Irwindale Spreading Grounds.
DIVERSION none.
CHANNEL concrete, rectangular section.
CONTROL channel forms control.
LENGTH OF RECORD REMARKS flow may include imported water originating at San Dimas.

RUNOFF - STREAM GAGING STATION INFORMATION

EATON WASH
@ Loftus Drive
STATION NO. F318-R

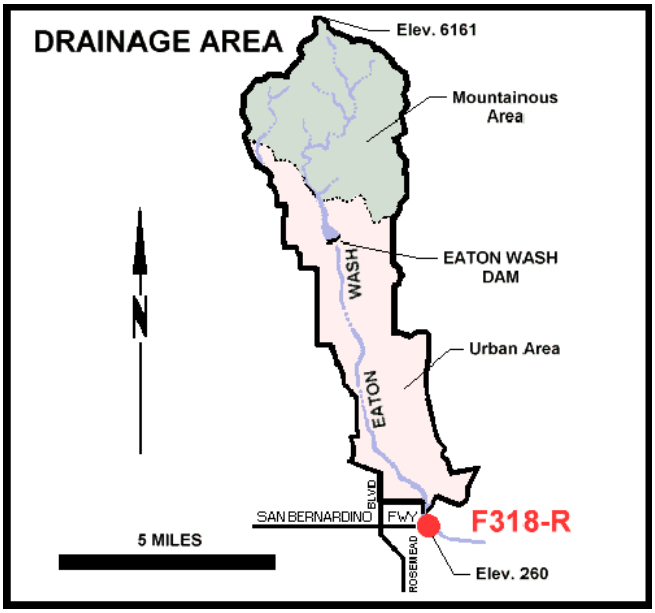

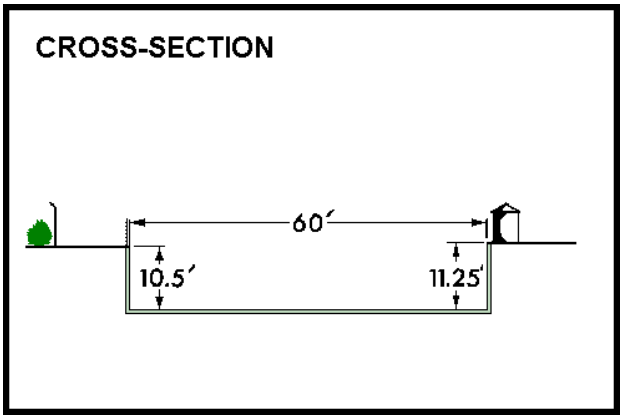

RECORDER 5 min. interval data logger.
METHOD OF MEASUREMENT low flows measured by wading. High flows measured from upstream side of East Loftus Drive bridge.
DRAINAGE AREA 22.80 square miles.
LOCATION on the west wall of the channel 52 feet above the centerline of East Loftus Drive bridge, 1.3 miles west of El Monte.
REGULATION partly regulated by Eaton Dam.
DIVERSION the Pasadena Water Department diverts some water just above the mouth of Eaton Canyon. The Flood Control District Diverts water to spreading grounds below Eaton Dam and below Huntington Drive.
CHANNEL rectangular concrete, 60 feet wide, 11.3 feet.
CONTROL channel forms control.
LENGTH OF RECORD 1956 to date.

RUNOFF - STREAM GAGING STATION INFORMATION

FISH CREEK
above Mouth of Canyon
STATION NO. U7-R

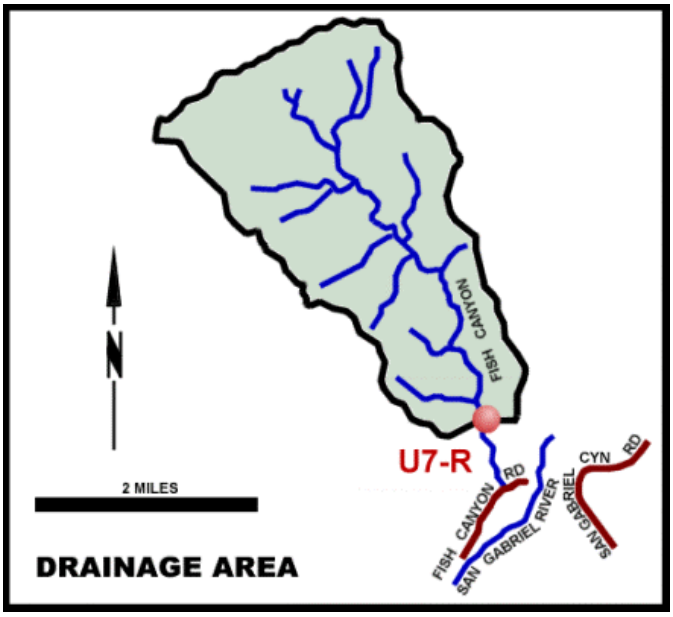

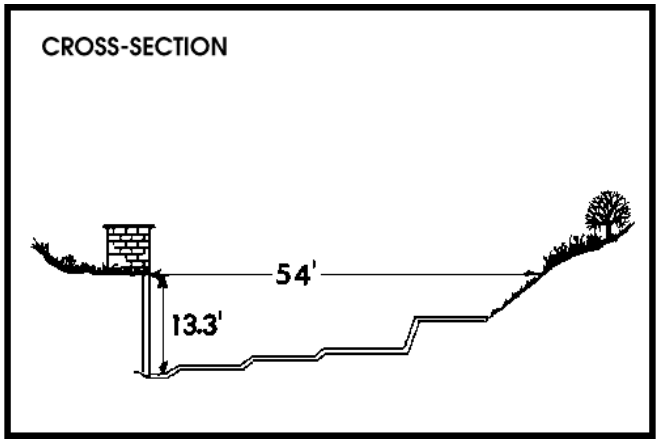

RECORDER 5 min. interval data logger.
METHOD OF MEASUREMENT wading.
DRAINAGE AREA 6.36 square miles.
LOCATION 0.8 miles upstream of Mouth of Canyon and 3.0 miles northeast of Duarte.
REGULATION none.
DIVERSION none.
CHANNEL natural, rock and gravel.
CONTROL concrete control.
LENGTH OF RECORD July to September 1916; July 1917 to date.
REMARKS operated and maintained by USGS until October 1, 1971.

RUNOFF - STREAM GAGING STATION INFORMATION

LITTLE ROCK CREEK

above Little Rock Dam

STATION NO. L1-R

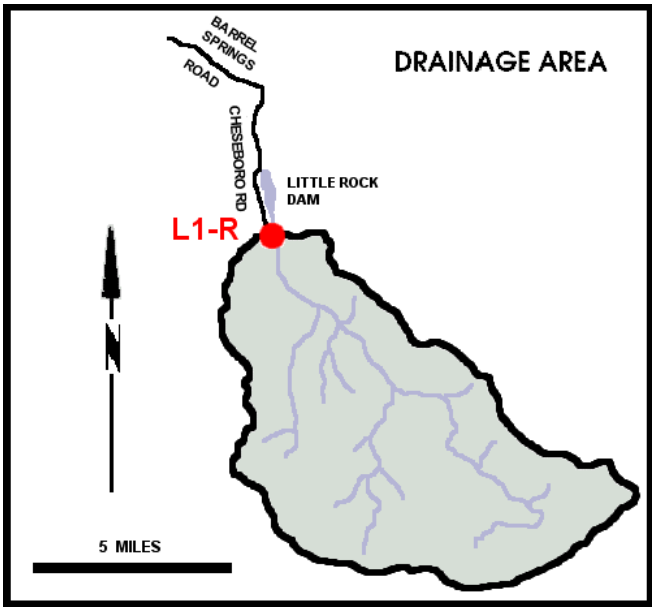

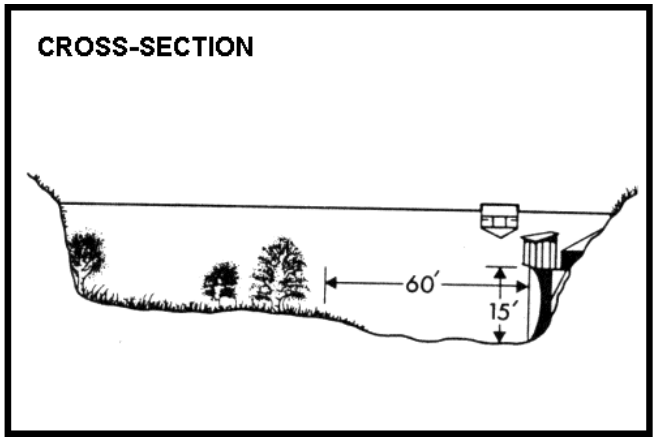

RECORDER continuous water stage.
METHOD OF MEASUREMENT wading or from cable car.
DRAINAGE AREA 49.20 square miles.
LOCATION 2.0 miles above Little Rock Dam, 5.0 miles south of Little Rock.
REGULATION none.
DIVERSION none.
CHANNEL Sand, gravel, and boulder, natural in section.
CONTROL channel forms control.
LENGTH OF RECORD October 1, 1930 to date.

RUNOFF - STREAM GAGING STATION INFORMATION

LOS ANGELES RIVER
below Wardlow River Road
STATION NO. F319-R

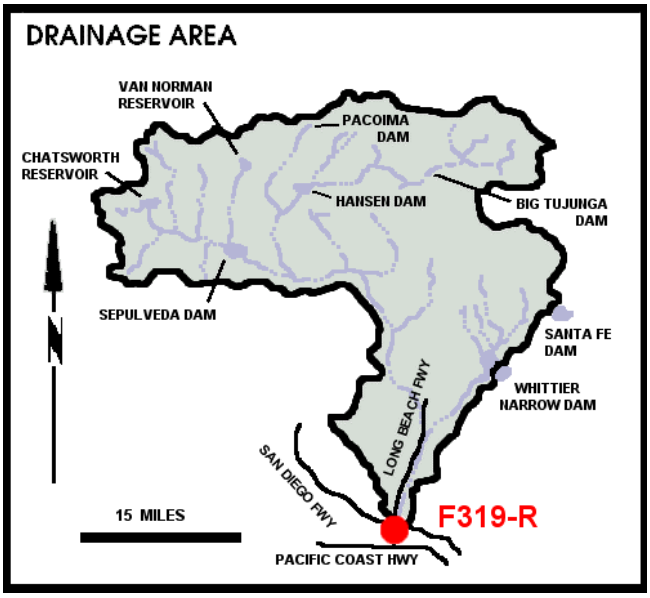

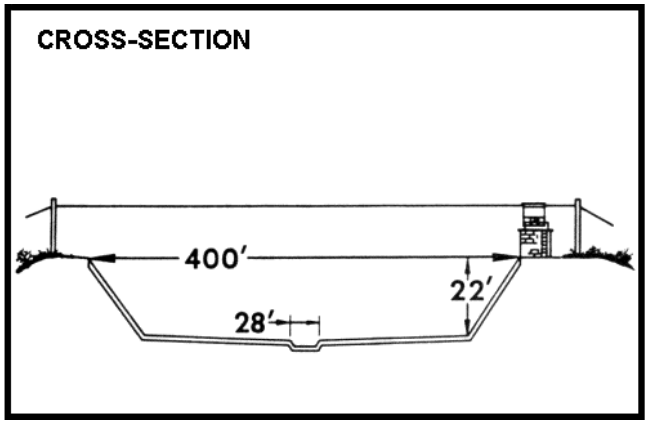

RECORDER continuous water stage.
METHOD OF MEASUREMENT wading or from cable car.
DRAINAGE AREA 815.00 square miles.
LOCATION 900.0 feet below Wardlow Road, Long Beach.
REGULATION flow is subject to the same regulation as Station F34D-R and P45B-R.
DIVERSION flows diverted to Dominguez Gap Spreading Grounds.
CHANNEL trapezoidal, concrete, 302.0 feet wide at bottom with 2.25:1 side slopes. Low flow channel 28.0 feet wide by 1.0 foot deep in center of channel.
CONTROL channel forms control.
LENGTH OF RECORD at Station F180-R, October 31, 1931 to January 13, 1956; at Station F319-R, January 13, 1956 to date.
REMARKS prior to 1931, see Station F36-R.

RUNOFF - STREAM GAGING STATION INFORMATION

LOS ANGELES RIVER
below Firestone Blvd.
STATION NO. F34D-R

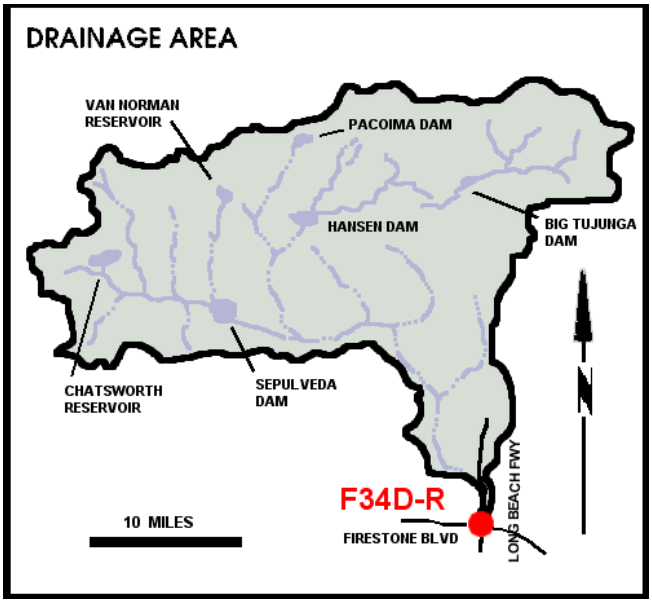

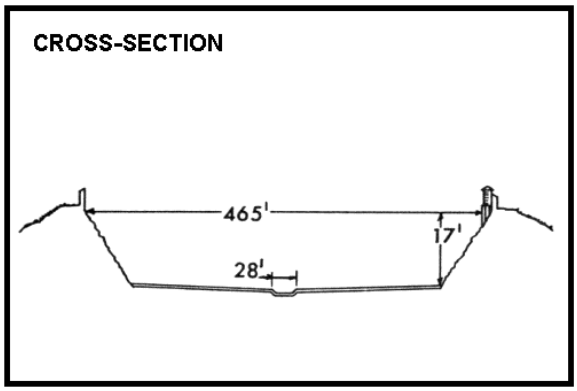

RECORDER continuous water stage.
METHOD OF MEASUREMENT wading or from bridge.
DRAINAGE AREA 596.00 square miles.
LOCATION 472.0 feet downstream of Firestone Boulevard, 3.0 miles west of Downey.
REGULATION partially regulated by Sepulveda, Pacoima, Big Tujunga, Hansen, and Devil's Gate Dam; and by several spreading grounds, reservoirs, and debris basins.
DIVERSION none.
CHANNEL concrete, with rip-rap side slopes, trapezoidal in section, with trapezoidal low flow channel.
CONTROL channel forms control.
LENGTH OF RECORD at Station F34-R, March 1, 1928 to April 11, 1938; at Station F34B-r, April 11, 1938 to November 3, 1949; at Station F34C-R, November 4, 1949 to December 11, 1956; at Station F34D-R, December 11, 1956 to date.
REMARKS subject to diversion from Big Tujunga Creek, Arroyo Seco, and other domestic irrigation diversions.

RUNOFF - STREAM GAGING STATION INFORMATION

LOS ANGELES RIVER
@ Tujunga Avenue
STATION NO. F300-R

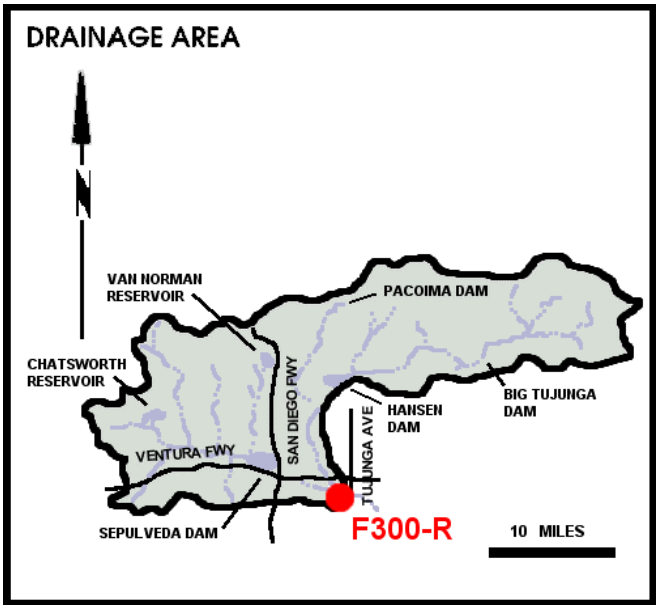

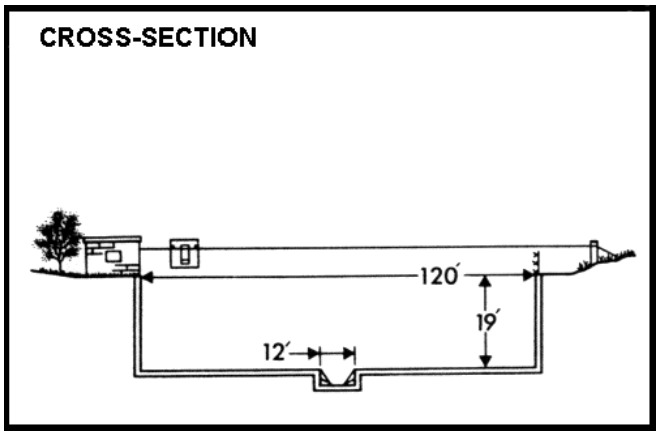

RECORDER continuous water stage.
METHOD OF MEASUREMENT wading or from cable car.
DRAINAGE AREA 401 square miles.
LOCATION 200 feet above Tujunga Avenue bridge, Studio City.
REGULATION flow regulated by Sepulveda, Big Tujunga, Hansen, Pacoima Dams, Lopez Debris Dam, and Project No. 85 Diversion.
DIVERSION none.
CHANNEL concrete, rectangular section, 120 feet wide by 19 feet deep.
CONTROL channel forms control.
LENGTH OF RECORD from May 8, 1950 to date.
REMARKS subject to diversions at mouth of Big Tujunga and Pacoima Canyons for irrigation, at Big Tujunga, Branford, Hansen, and Pacoima Spreading Grounds.

RUNOFF - STREAM GAGING STATION INFORMATION

MALIBU CREEK
below Cold Creek
STATION NO. F130-R

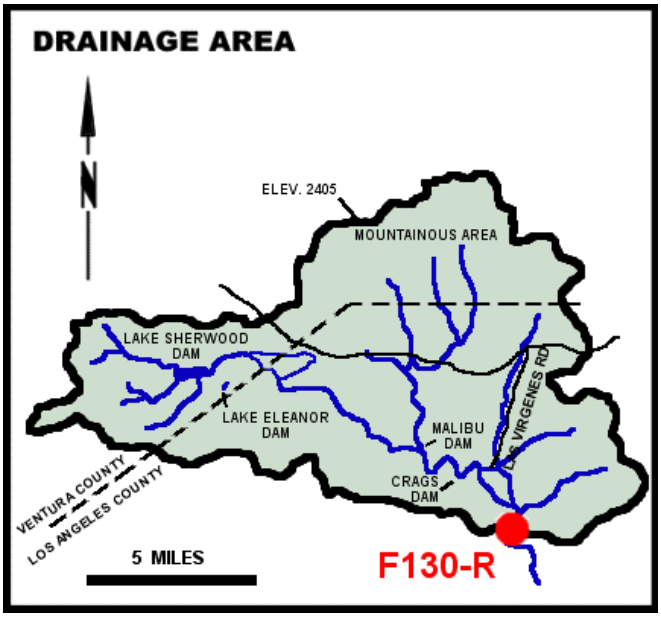

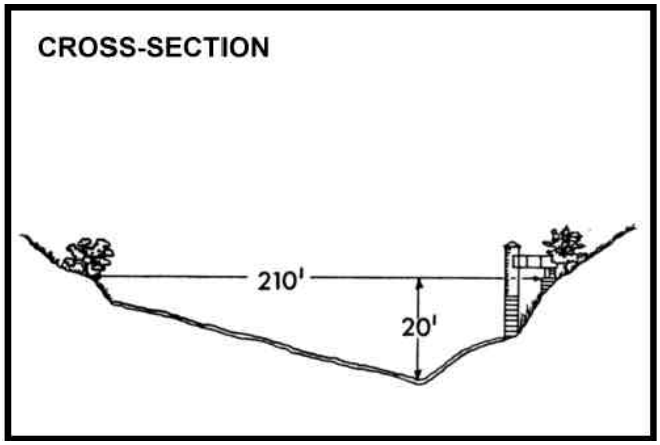

RECORDER continuous water stage.
METHOD OF MEASUREMENT wading or from cable car.
DRAINAGE AREA 104.96 square miles.
LOCATION 0.2 mile downstream of Cold Creek, 6.0 miles southwest of Calabasas.
REGULATION Lake Sherwood Dam, Lake Eleanor Dam, Malibu Lake Dam and Crag's Dam. Other small recreational dams affect low summer flows.
DIVERSION none.
CHANNEL coarse sand and gravel, lines with trees and brush, natural in section.
CONTROL concrete stabilizer.
LENGTH OF RECORD January 17, 1931 to date.
REMARKS cableway washed out on January 25, 1969; no high flow measurements since that date.

RUNOFF - STREAM GAGING STATION INFORMATION

MINT CANYON CREEK
@ Fitch Avenue
STATION NO. F328-R

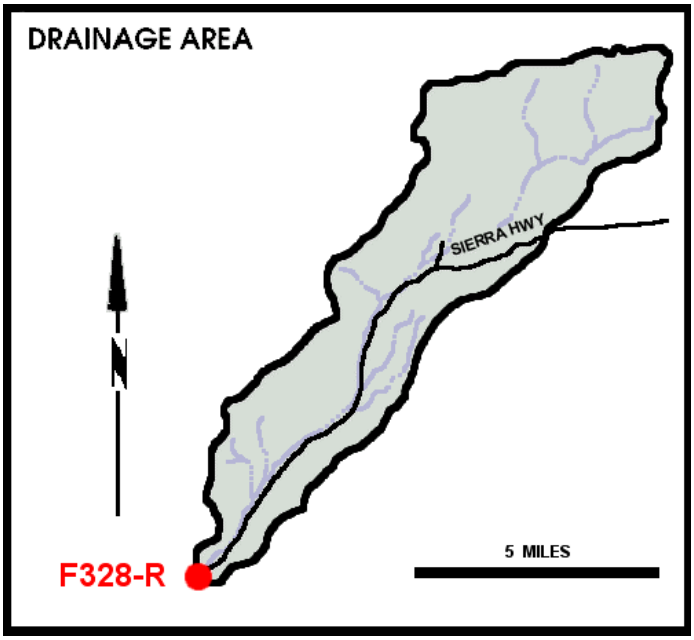

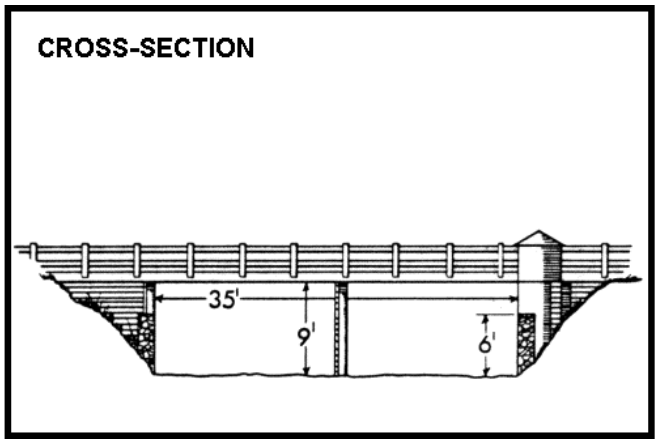

RECORDER continuous water stage.
METHOD OF MEASUREMENT wading or from cable car.
DRAINAGE AREA 26.90 square miles.
LOCATION 8.5 miles northeast of Saugus on west end of Fitch Avenue bridge.
REGULATION none.
DIVERSION none.
CHANNEL natural, sand and gravel.
CONTROL concrete control at downstream end of bridge.
LENGTH OF RECORD October 26, 1956 to date.

RUNOFF - STREAM GAGING STATION INFORMATION

MONTEBELLO STORM DRAIN

outlet to Rio Hondo

STATION NO. F181-R

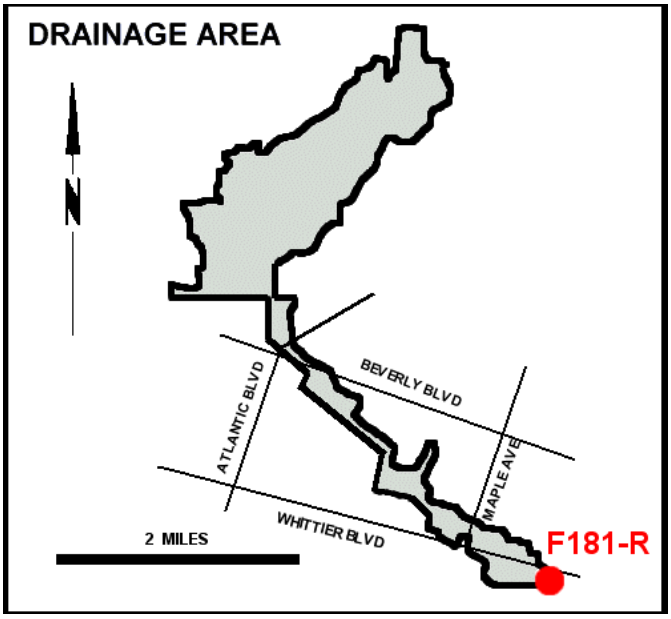

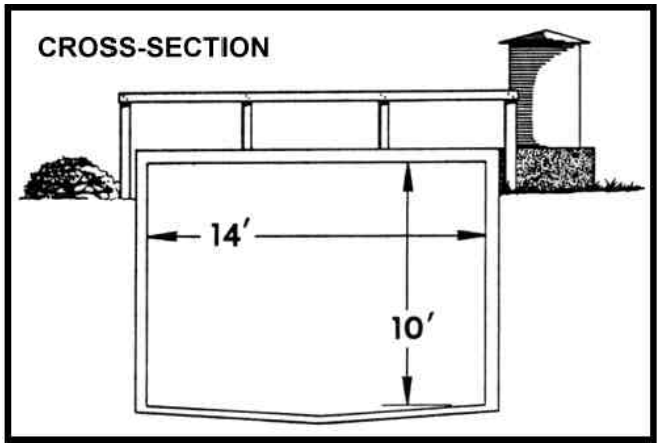

RECORDER continuous water stage.
METHOD OF MEASUREMENT wading or from footbridge.
DRAINAGE AREA 9.60 square miles.
LOCATION 150.0 feet east of Mines Avenue and 500.0 feet west of Rio Hondo.
REGULATION none.
DIVERSION none.
CHANNEL 14.0 foot by 10.0 foot concrete, box section.
CONTROL channel forms control.
LENGTH OF RECORD January 12, 1932 to date.
REMARKS may be affected by backwater during flood flows.

RUNOFF - STREAM GAGING STATION INFORMATION

PALLETT CREEK
@ Valyermo Highway
STATION NO. F122-R

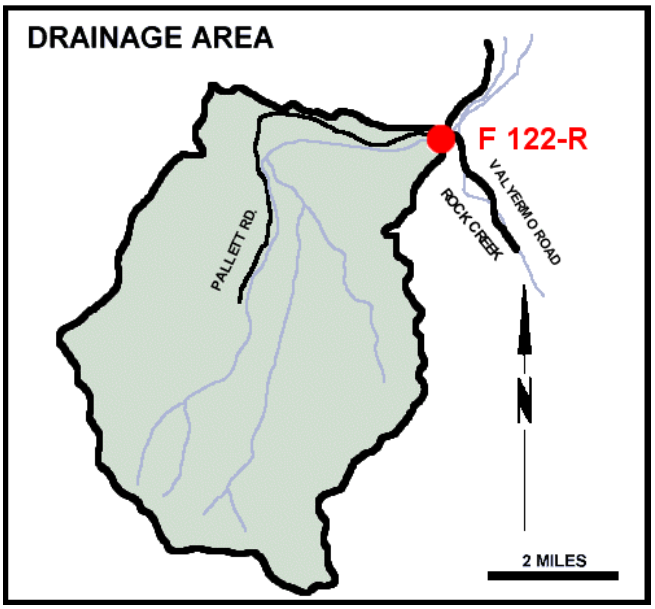

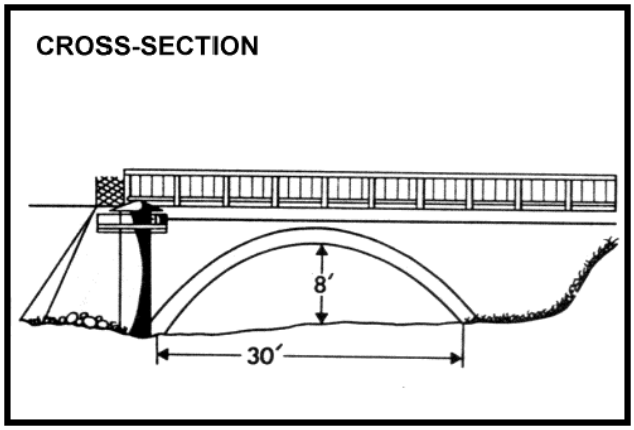

RECORDER continuous water stage.
METHOD OF MEASUREMENT wading or from bridge.
DRAINAGE AREA 15.80 square miles.
LOCATION upstream side of Valyermo Highway bridge, 5.0 miles southeast of Pearblossom.
REGULATION none.
DIVERSION none.
CHANNEL sand and gravel, natural section.
CONTROL channel forms control for low flows; bridge form control for high flows.
LENGTH OF RECORD at Station F122-S, December 29, 1930 to October 31, 1961; at Station F122-R, October 31, 1961 to date.

RUNOFF - STREAM GAGING STATION INFORMATION

RIO HONDO

above Stuart and Gray Road

STATION NO. F45B-R

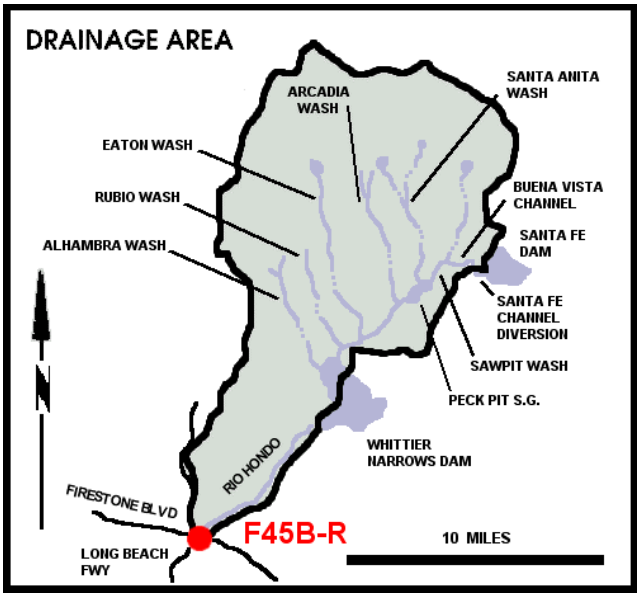

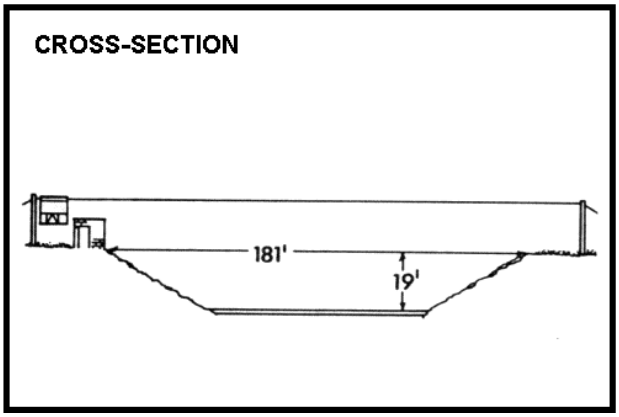

RECORDER continuous water stage.
METHOD OF MEASUREMENT wading or from cable car.
DRAINAGE AREA 140 square miles.
LOCATION 0.6 mile upstream of the confluence of Rio Hondo and Los Angeles River, 1.5 miles west of Downey.
REGULATION partially regulated by Sierra Madre, Santa Anita, Sawpit, Eaton, Santa Fe, and Whittier Narrows Dams, several debris basins, and spreading grounds.
DIVERSION none.
CHANNEL concrete with rip-rap side slopes, trapezoidal in section.
CONTROL channel forms control.
LENGTH OF RECORD at Station F45-R, March 1, 1928 to April 18, 1951; at Station F45B-R, October 31, 1951 to date.
REMARKS subject to diversions from Eaton Creek, Monrovia Creek, Sawpit Creek, Little Santa Anita Canyon, and other locations for irrigation and spreading. High flows from San Gabriel River may flow into Rio Hondo above Whittier Narrows Dam.

RUNOFF - STREAM GAGING STATION INFORMATION

RIO HONDO

above Mission Bridge

STATION NO. F64-R

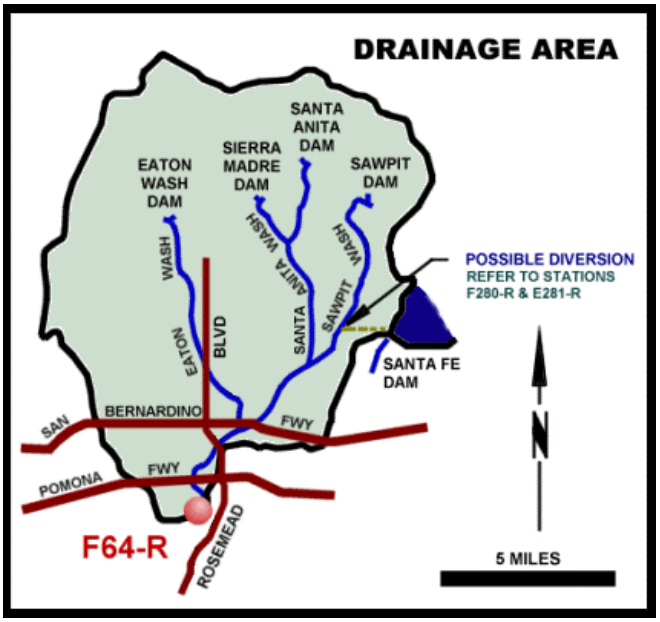

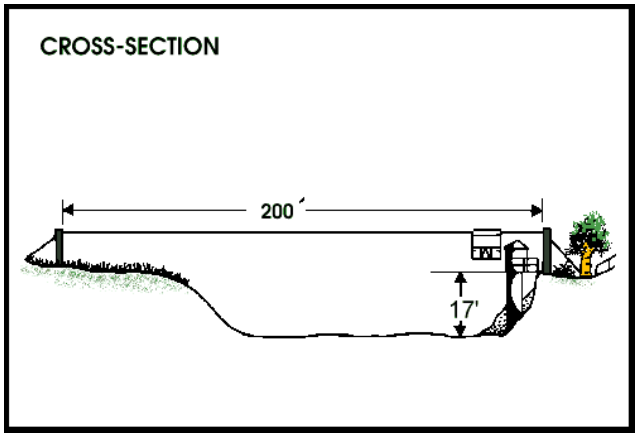

RECORDER 5 min. interval data logger.
METHOD OF MEASUREMENT wading or from cable car.
DRAINAGE AREA 115 square miles.
LOCATION 1,000 feet above San Gabriel Boulevard, west of Rosemead Boulevard, 2.0 miles northeast of Montebello.
REGULATION partially regulated by Sierra Madre, Santa Anita, Sawpit, Eaton, and Santa Fe Dams and several debris basins.
DIVERSION none.
CHANNEL sand and silt, natural in section.
CONTROL none.
LENGTH OF RECORD July 1, 1928 to date.
REMARKS subject to diversion; water purchased from the MWD passes this station for spreading in the coastal basin.

RUNOFF - STREAM GAGING STATION INFORMATION

RIO HONDO

below Lower Azusa Avenue

STATION NO. F192B-R

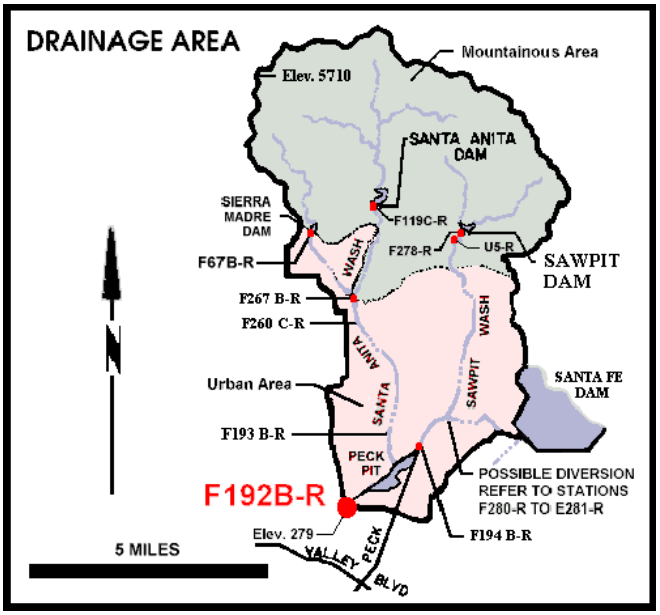

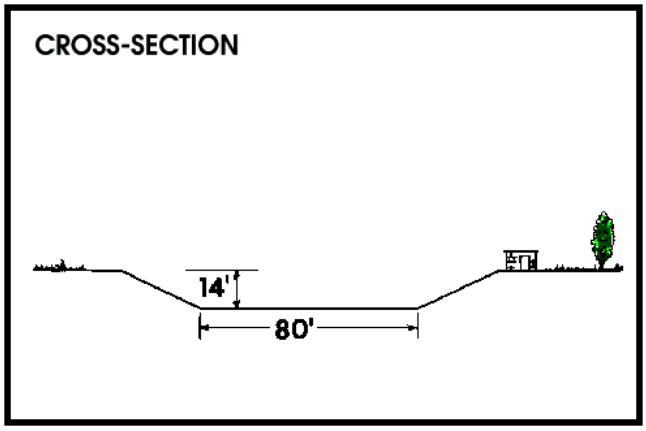

RECORDER 5 min. interval data logger.
METHOD OF MEASUREMENT wading.
DRAINAGE AREA 40.90 square miles.
LOCATION 300 feet downstream from Lower Azusa Road, 1.5 miles north of El Monte.
REGULATION partially regulated by Sierra Madre Dam, Santa Anita Dam, Sawpit Dam, Santa Fe Dam, Peck Pit, Buena Vista Pit, and several debris basins.
DIVERSION none.
CHANNEL concrete, trapezoidal section.
CONTROL channel forms control.
LENGTH OF RECORD at Station F192-R, February 22, 1932 to May 7, 1958; at Station F192B-R, May 7, 1058 to date.
REMARKS subject to diversions from Monrovia, Sawpit, and Little Santa Anita Creeks. Also from the San Gabriel River below Santa Fe Dam; and form irrigation and spreading.

RUNOFF - STREAM GAGING STATION INFORMATION

RUBIO DIVERSION CHANNEL

below Gooseberry Inlet

STATION NO. F338-R

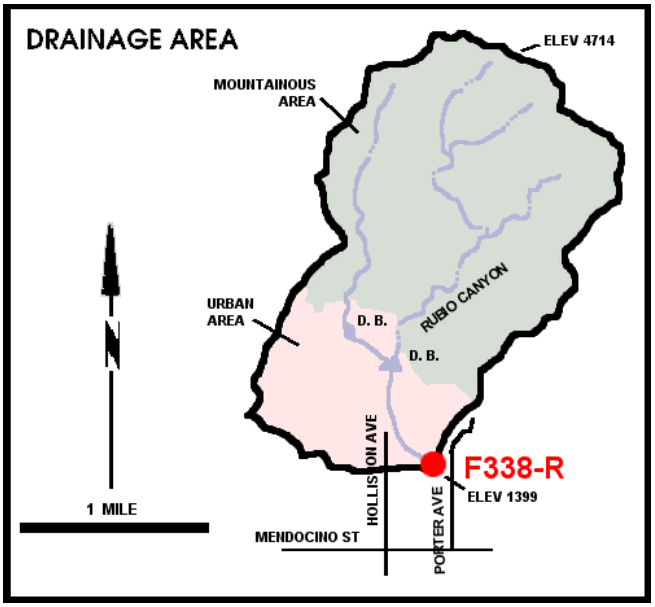

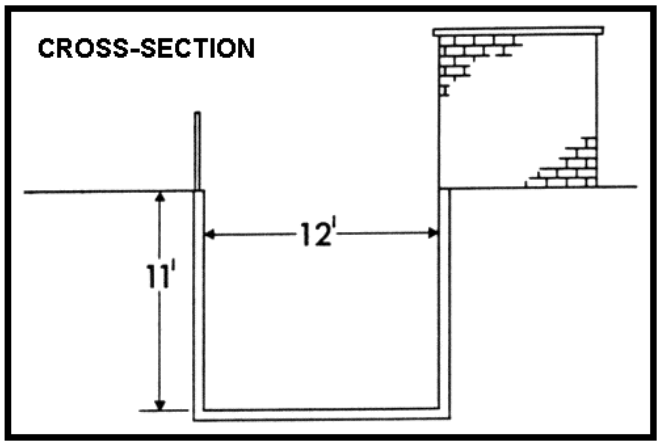

RECORDER 15 min. punch tape.
METHOD OF MEASUREMENT low flows measured by wading. High flows measured from steel footbridge 27 feet above station.
DRAINAGE AREA 2.10 square miles.
LOCATION on the north bank, 375 feet upstream of Crest Drive, 3.5 miles northeast of Pasadena.
REGULATION flow partially regulated by Rubio and Goosebury Debris Basins.
DIVERSION none.
CHANNEL rectangular concrete, 12 feet wide and 11 feet deep.
CONTROL channel forms control.
LENGTH OF RECORD December 16, 1959 to date.

RUNOFF - STREAM GAGING STATION INFORMATION

RUBIO WASH
@ Glendon Way
STATION NO. F82C-R

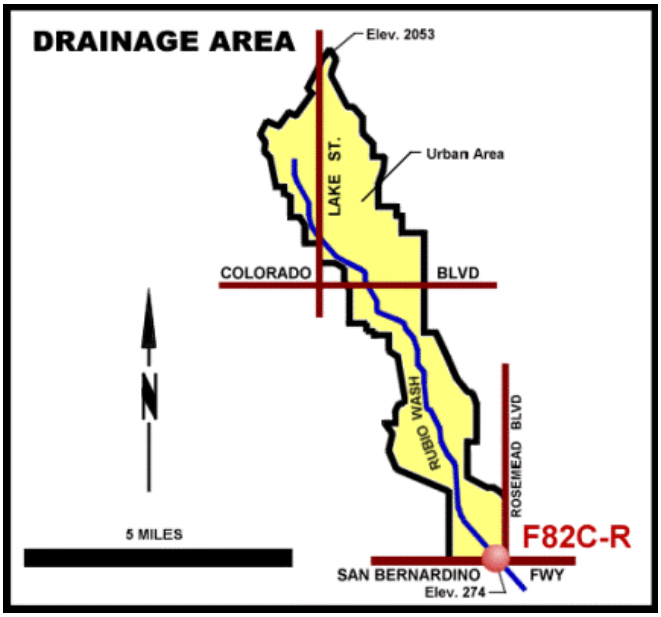

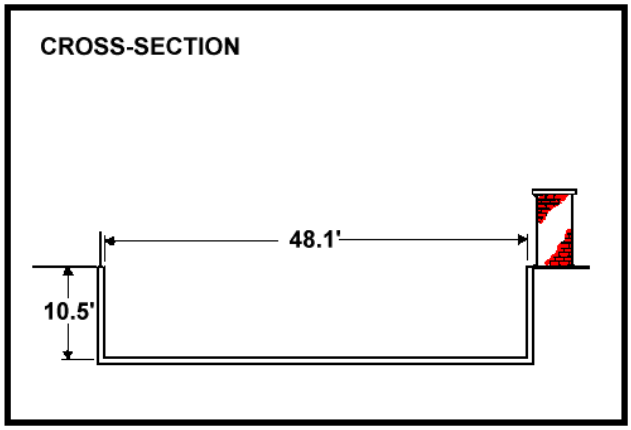

RECORDER 5 min. interval data logger.
METHOD OF MEASUREMENT low flows measured by wading. High flows measured from footbridge at station.
DRAINAGE AREA 10.90 square miles.
LOCATION on the east side of channel, 10 feet south of the westerly extension of Glendon Way, Rosemead.
REGULATION partly regulated by Las Flores and Rubio debris basins.
DIVERSION none.
CHANNEL rectangular concrete.
CONTROL channel forms control.
LENGTH OF RECORD see station summary.

RUNOFF - STREAM GAGING STATION INFORMATION

SAN GABRIEL RIVER

below San Gabriel River Parkway

STATION NO. F263C-R

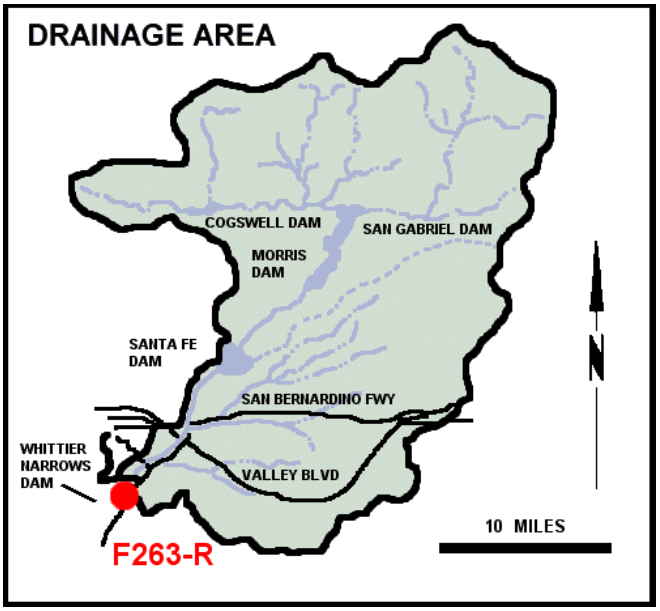

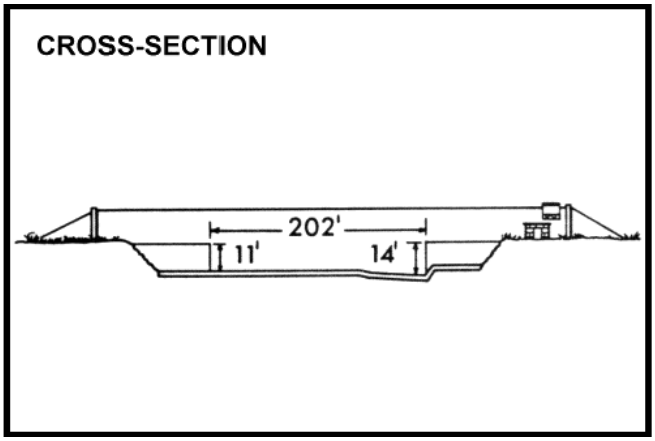

RECORDER continuous water stage.
METHOD OF MEASUREMENT wading or from cable car.
DRAINAGE AREA 206.30 square miles.
LOCATION 462 feet below San Gabriel River Parkway, 1.4 miles northeast of Pico Rivera.
REGULATION partially regulated by Santa Fe, Big Dalton, Puddingstone Diversion, Puddingstone, and Thompson Creek Dams. Flows may include imported water from several Metropolitan Water District outlets. Water is at times diverted to the Zone one ditch, upstream of Whittier Narrows Dam.
DIVERSION none.
CHANNEL rip-rap slopes with sand bottom trapezoidal section.
CONTROL concrete stabilizer.
LENGTH OF RECORD at Station F263-R, February 4, 1937 to March 6, 1952; at Station F263B-R, March 6, 1952 to August 9, 1968; at Station F263C-R, August 9, 1968 to date.
REMARKS

RUNOFF - STREAM GAGING STATION INFORMATION

SAN GABRIEL RIVER
above Spring Street
STATION NO. F42B-R

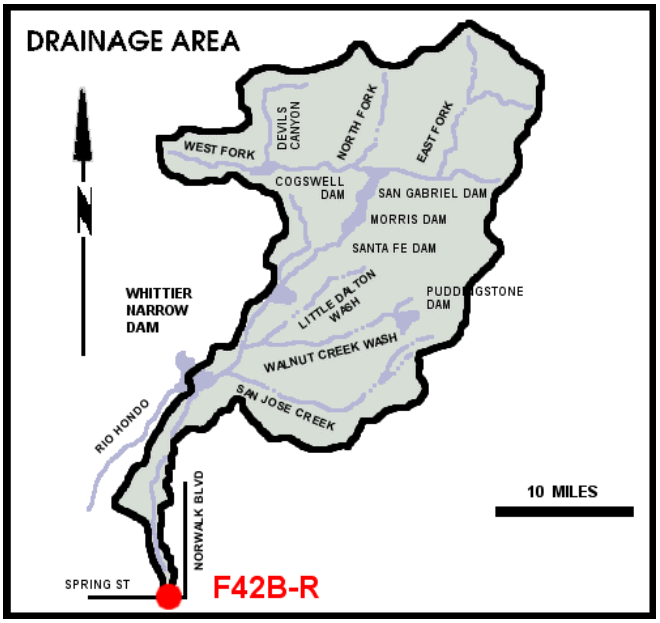

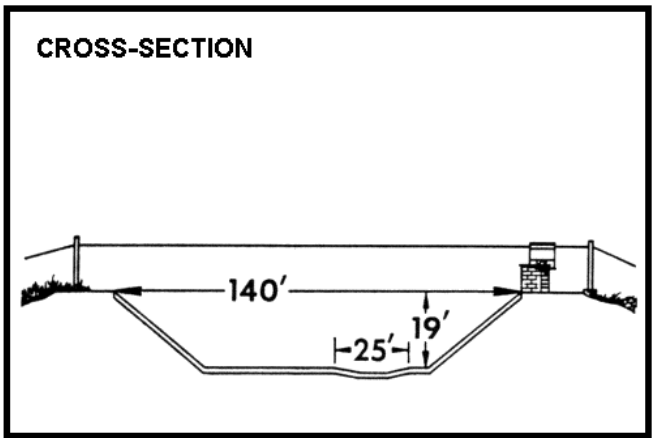

RECORDER continuous water stage.
METHOD OF MEASUREMENT wading or from cable car.
DRAINAGE AREA 231 square miles.
LOCATION 455 feet north of Spring Street, 4.0 miles east of Signal Hill, Long Beach.
REGULATION partially regulated by Cogswell, San Gabriel, Morris, Santa Fe, Big Dalton, San Dimas, Puddingstone Diversion, Puddingstone, Live Oak, Thompson Creek, and Whittier Narrows Dams, Several debris basins, MWD outlet, and several spreading grounds.
DIVERSION none.
CHANNEL concrete, trapezoidal section with low flow channel.
CONTROL channel forms control.
LENGTH OF RECORD at Station F42-R, February 6, 1928 to May 26, 1964; at Station F42B-R, November 16, 1964 to date.
REMARKS high flows into Whittier Narrows Reservoir are partially diverted to the Rio Hondo.

RUNOFF - STREAM GAGING STATION INFORMATION

SAN GABRIEL RIVER
@ Foothill Blvd.
STATION NO. F190-R

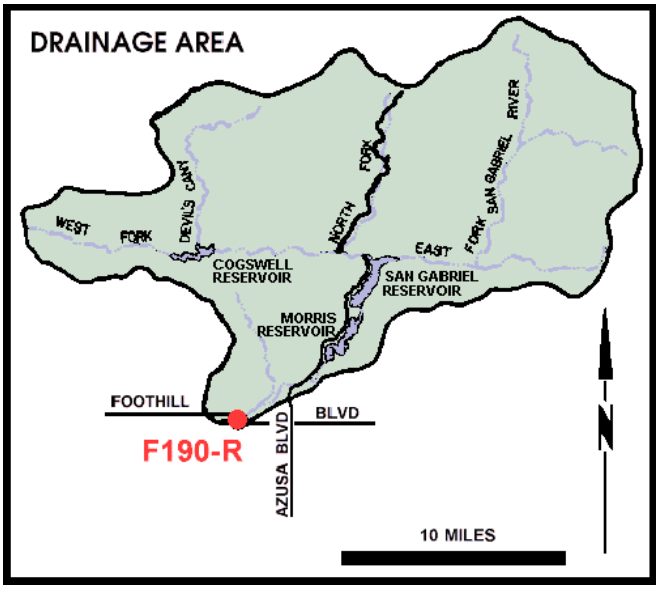

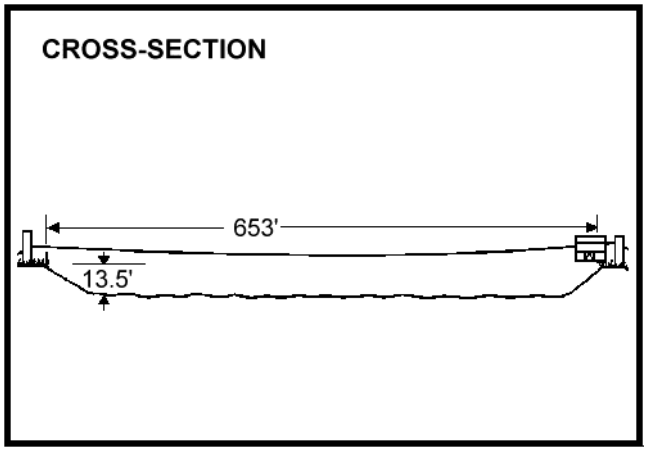

RECORDER 5 min. interval data logger.
METHOD OF MEASUREMENT wading or from cable car.
DRAINAGE AREA 230 square miles.
LOCATION downstream side of Foothill Boulevard bridge, 2 miles west of Azusa.
REGULATION partially regulated by Cogswell, San Gabriel, and Morris Dams.
DIVERSION none.
CHANNEL sand, gravel and rock, trapezoidal section with soft bottom.
CONTROL gunited rock stabilizers.
LENGTH OF RECORD February 22, 1932 to date.
REMARKS flows may include imported originating at the Metropolitan Water District outlet below Morris Dam.

RUNOFF - STREAM GAGING STATION INFORMATION

SAN GABRIEL RIVER
below Morris Dam
STATION NO. U8-R

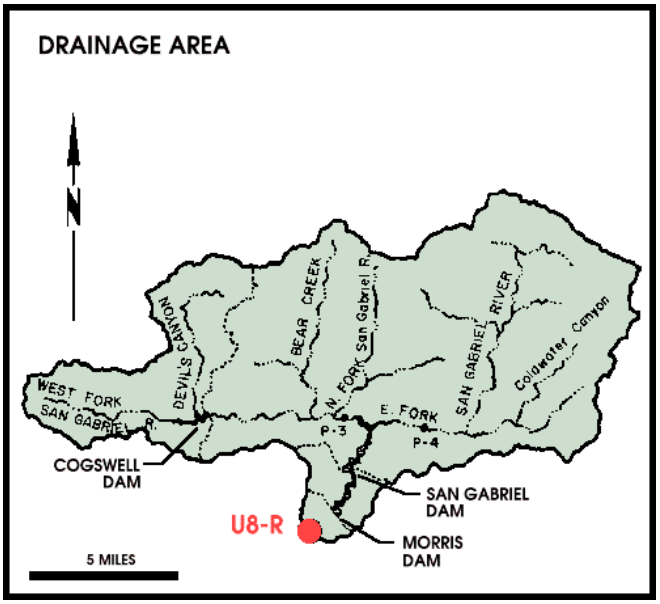

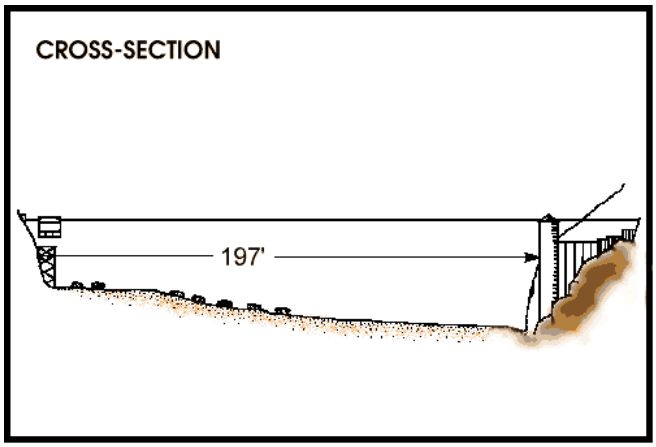

RECORDER 5 min. interval data logger.
METHOD OF MEASUREMENT wading or from cable car.
DRAINAGE AREA 212.4 square miles.
LOCATION 1.1 miles downstream of Morris Dam, 27 miles northeast of Azusa.
REGULATION all flows regulated by Cogswell Dam, 27 miles northeast of Azusa.
DIVERSION none.
CHANNEL gravel and boulder, natural section.
CONTROL concrete control.
LENGTH OF RECORD May 1894 to date.
REMARKS flows up to 90 cfs are at times diverted past the station through the Azusa Conduit, flows at station may include imported water from the MWD outlet below Morris Dam.

RUNOFF - STREAM GAGING STATION INFORMATION

SAN GABRIEL RIVER

above Florence Avenue

STATION NO. F262C-R

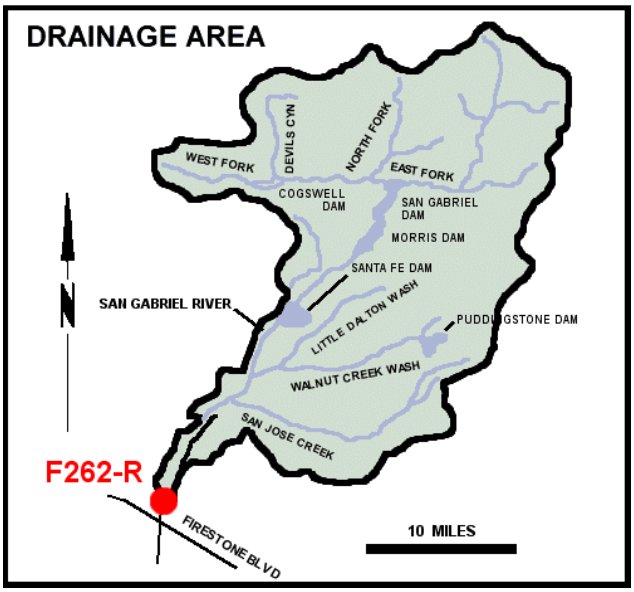

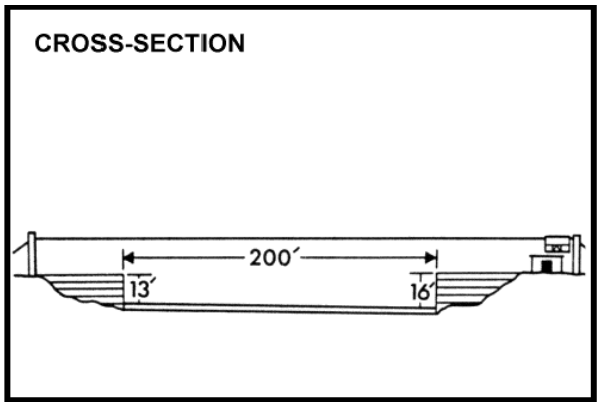

RECORDER continuous water stage.
METHOD OF MEASUREMENT wading or from cable car.
DRAINAGE AREA 215.80 square miles.
LOCATION 1,400 feet above Florence Avenue, 2 miles east of Downey.
REGULATION partially regulated by Cogswell, San Gabriel, Morris, Santa Fe, Big Dalton, San Dimas, Puddingstone Diversion, Puddingstone, Live Oak, Thompson Creek, and Whittier Narrows Dams, Several debris basin, MWD outlets, and several spreading grounds.
DIVERSION none.
CHANNEL sand bottom with rip-rap slopes, trapezoidal section.
CONTROL concrete stabilizer.
LENGTH OF RECORD at Station F267-R, February 27, 1937 to September 30, 1967; at Station F262B-R, August 6, 1968 to date.
REMARKS no recording during 1967-1968 season due to channel construction.

RUNOFF - STREAM GAGING STATION INFORMATION

SAN GABRIEL RIVER

below Valley Blvd.

STATION NO. F261C-R

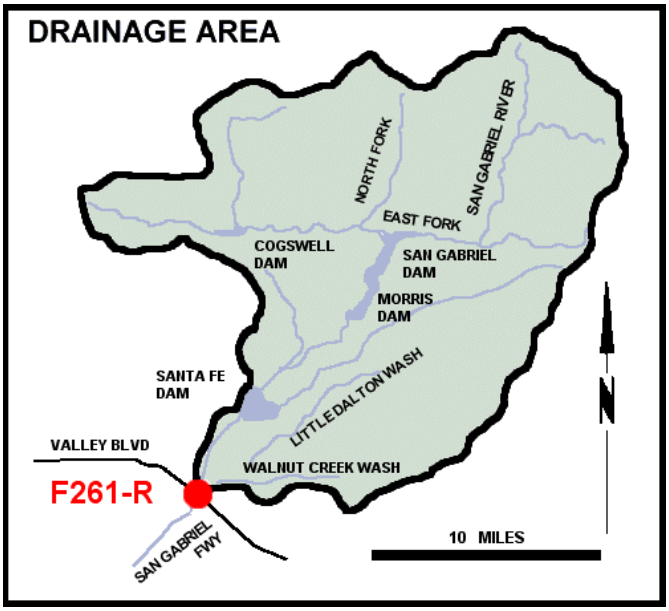

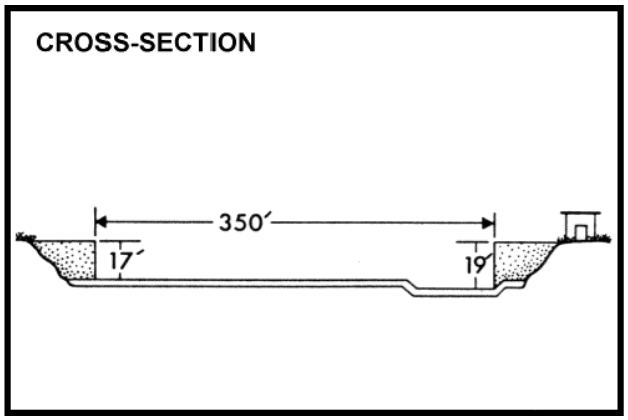

RECORDER continuous water stage.
METHOD OF MEASUREMENT wading.
DRAINAGE AREA 118.00 square miles.
LOCATION 1,150.0 feet below Valley Boulevard, 2.5 miles east of El Monte.
REGULATION partially regulated by Santa Fe, Big Dalton, Puddingstone Diversion, and Puddingstone Dams.
DIVERSION none.
CHANNEL sand and gravel bottom with rip-rap side slopes; trapezoidal section.
CONTROL concrete stabilizer with low-flow notch.
LENGTH OF RECORD at Station F261-R, March 11, 1937 to September 30,1941; at Station F361B-R, October 1, 1941 to April 23, 1946; at Station F261C-R, November 29, 1960 to date.
REMARKS flows may include imported water originating at Metropolitan Water District outlets at San Dimas Canyon and below San Bernardino Road.

RUNOFF - STREAM GAGING STATION INFORMATION

SAN JOSE CHANNEL
below Seventh Avenue
STATION NO. F312B-R

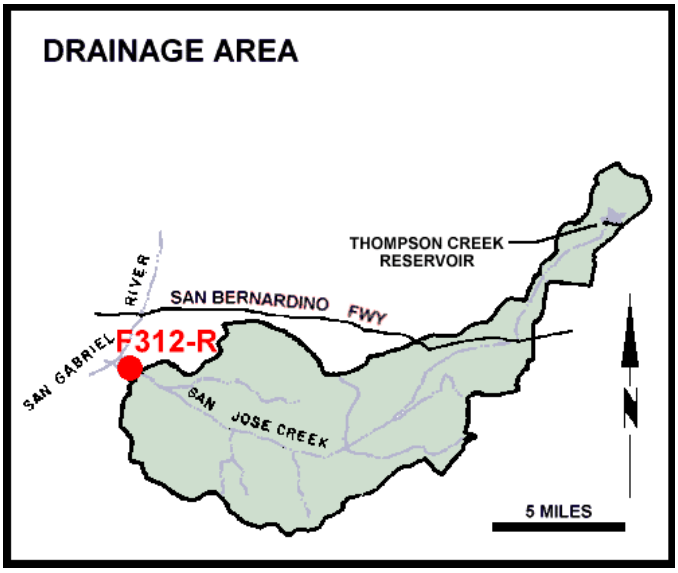

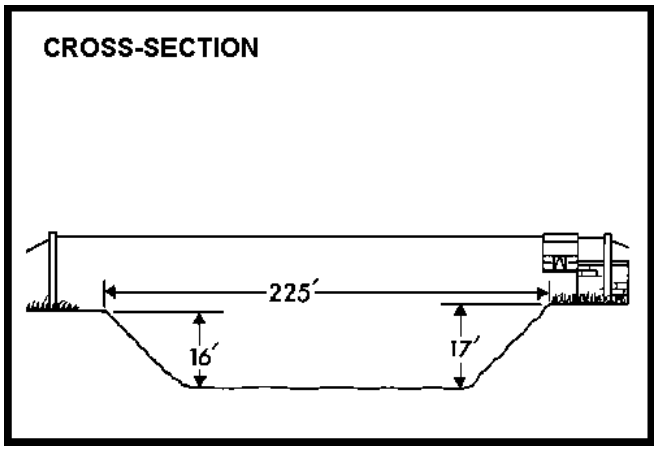

RECORDER 5 min. interval data logger.
METHOD OF MEASUREMENT wading or from cable car.
DRAINAGE AREA 83.4 square miles.
LOCATION 1,650 feet above Workman Mill Road, 3 miles southeast of El Monte.
REGULATION partially regulated by Thompson Creek Dam and Pomona Sewage Treatment Plant.
DIVERSION none.
CHANNEL grouted rip-rap side slopes with natural bottom, trapezoidal section.
CONTROL rock stabilizer.
LENGTH OF RECORD September 13, 1955 to date.
REMARKS

RUNOFF - STREAM GAGING STATION INFORMATION

SANTA ANITA WASH
@ Longden Avenue
STATION NO. F193B-R

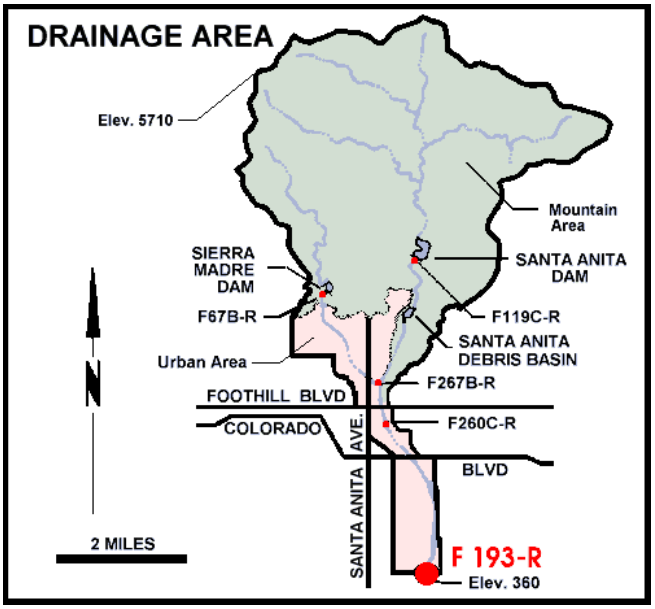

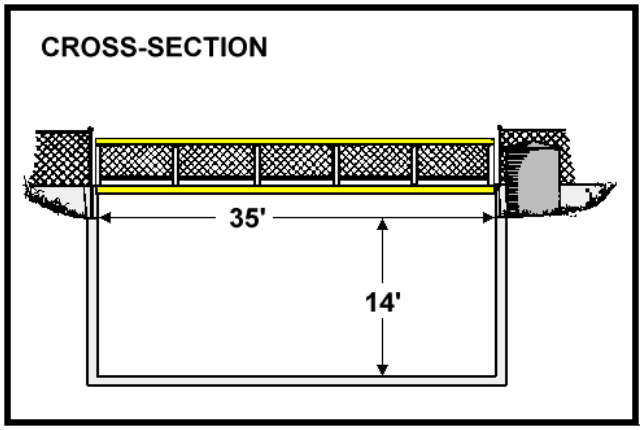

RECORDER 5 min. interval data logger.
METHOD OF MEASUREMENT wading or from bridge.
DRAINAGE AREA 18.80 square miles.
LOCATION 30.0 feet above Longden Avenue, 1.5 miles south of Arcadia.
REGULATION regulated by Santa Anita and Sierra Madre Dams, and Santa Anita Debris Basin.
DIVERSION none.
CHANNEL concrete, rectangular section.
CONTROL channel forms control.
LENGTH OF RECORD at Station F193-R, April 25, 1932 to March 1, 1938; at Station F193B-R, January 5, 1960 to date.

RUNOFF - STREAM GAGING STATION INFORMATION

SANTA CLARA RIVER
@ Old Road Bridge
STATION NO. F92C-R

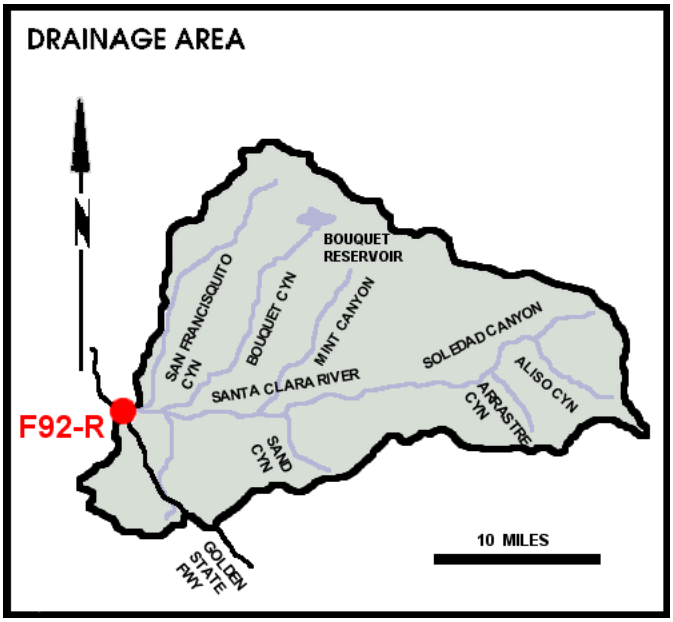

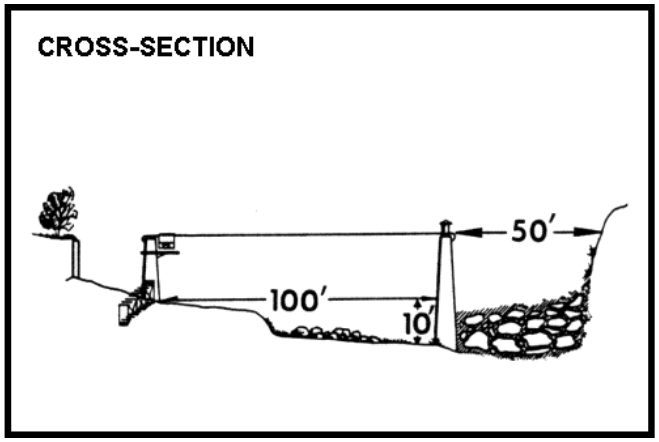

RECORDER continuous water stage.
METHOD OF MEASUREMENT wading or from cable car.
DRAINAGE AREA 410.40 square miles.
LOCATION downstream side of Old Highway bridge, 3 miles west of Saugus.
REGULATION partially regulated by Bouquet Canyon and Dry Canyon Reservoirs.
DIVERSION none.
CHANNEL sand and gravel with brush, natural section.
CONTROL none.
LENGTH OF RECORD at Station F92-R, January 18, 1930 to March 28, 1938, and September 24, 1956 to date; at Station F92B-R, October 1, 1938 to September 24, 1956.
REMARKS subject to diversions for irrigation.

RUNOFF - STREAM GAGING STATION INFORMATION

SANTA FE DIVERSION CHANNEL

below Santa Fe Dam

STATION NO. F280-R

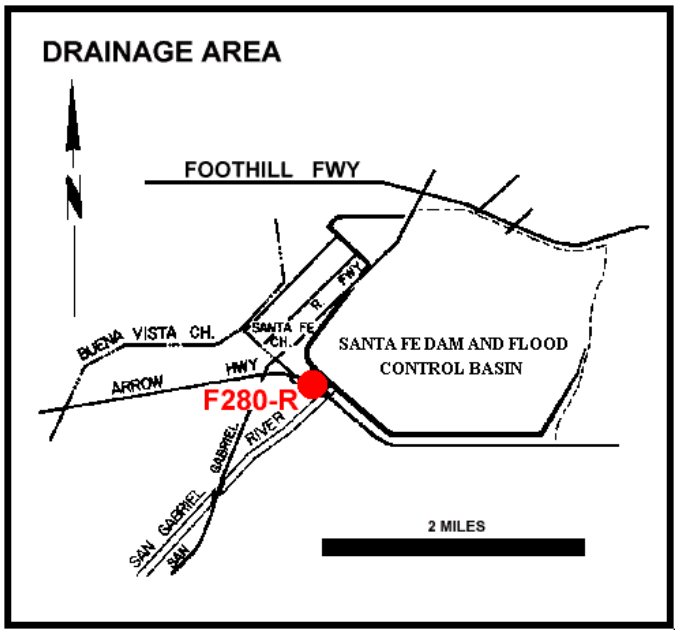

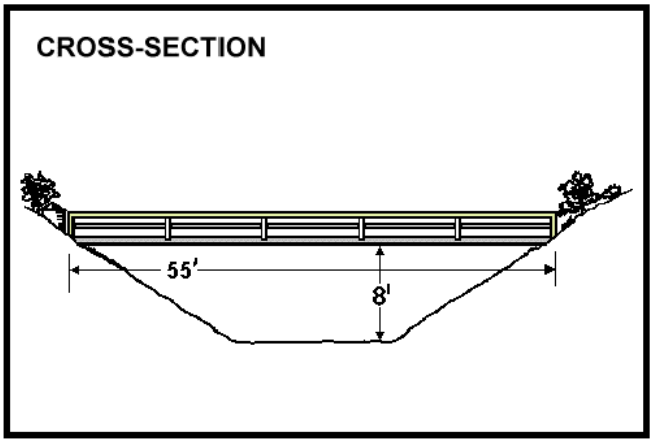

RECORDER 5 min. interval data logger.
METHOD OF MEASUREMENT wading or from footbridge.
DRAINAGE AREA Controlled square miles.
LOCATION 400 feet downstream of Santa Fe Dam outlet and 1.5 miles north of Baldwin Park.
REGULATION flow regulated by five gates of stilling basin outlet of Santa Fe Dam.
DIVERSION none.
CHANNEL sand and gravel, natural section.
CONTROL concrete stabilizer.
LENGTH OF RECORD at Station F280-S, October 1, 1942 to May 12, 1944; at Station F280-R, May 12, 1944 to date.
REMARKS

RUNOFF - STREAM GAGING STATION INFORMATION

SANTIAGO CREEK
above Little Rock Creek
STATION NO. F125-R

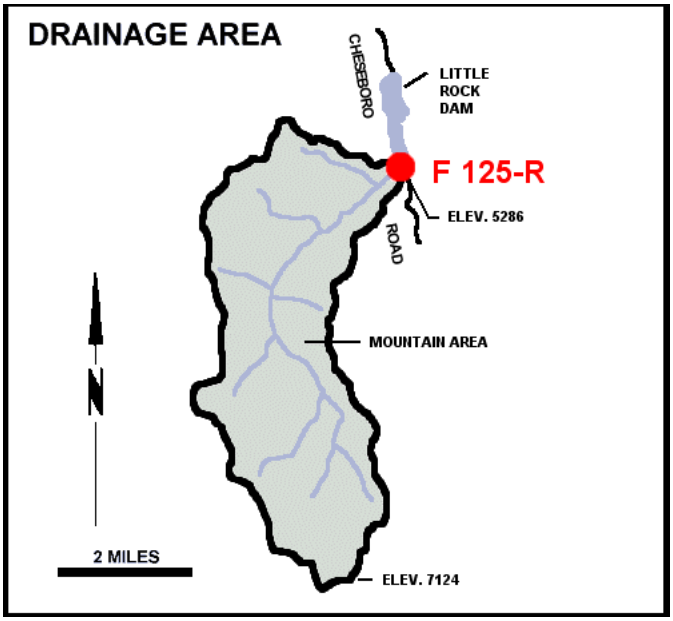

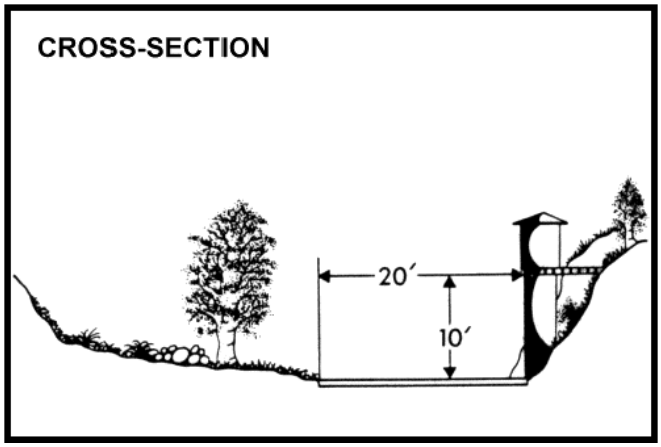

RECORDER continuous water stage.
METHOD OF MEASUREMENT wading.
DRAINAGE AREA 11.20 square miles.
LOCATION 1,000 feet above Little Creek and 4.5 miles south of Little Rock.
REGULATION none.
DIVERSION none.
CHANNEL sand, gravel and boulders.
CONTROL concrete and rubble wall.
LENGTH OF RECORD September 29, 1953 to date.
REMARKS no high flow measurements.

RUNOFF - STREAM GAGING STATION INFORMATION

SAWPIT WASH
below Live Oak Avenue
STATION NO. F194B-R

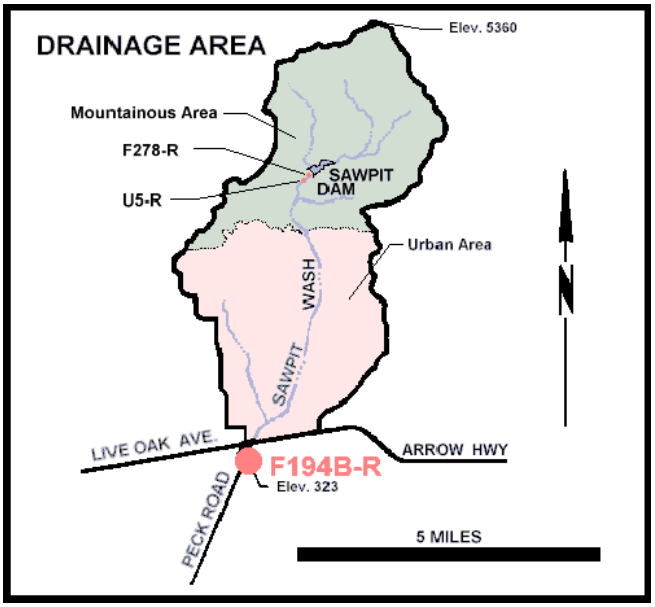

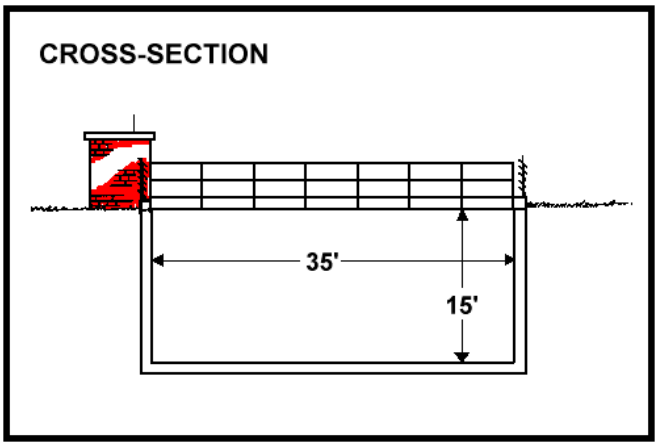

RECORDER 5 min. interval data logger.
METHOD OF MEASUREMENT wading from footbridge.
DRAINAGE AREA 16.10 square miles.
LOCATION 1,500 feet below Arrow Highway, 3.0 miles south of Monrovia.
REGULATION partially regulated by Sawpit and Santa Fe Dams, and several debris basins.
DIVERSION none.
CHANNEL concrete, rectangular section.
CONTROL channel forms control.
LENGTH OF RECORD at Station F194-R, February 22, 1932 to September 1, 1935; at Station F194B-R, December 5, 1960 to date.

RUNOFF - STREAM GAGING STATION INFORMATION

TOPANGA CREEK
above Mouth of Canyon
STATION NO. F54C-R

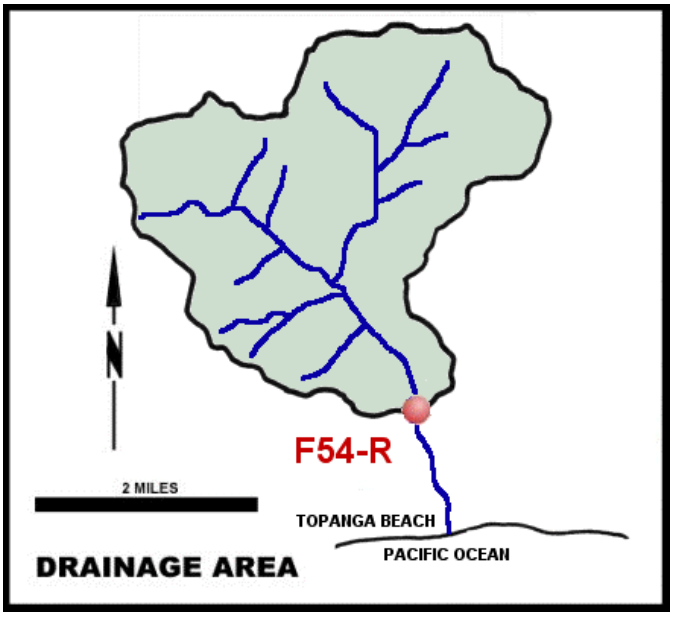

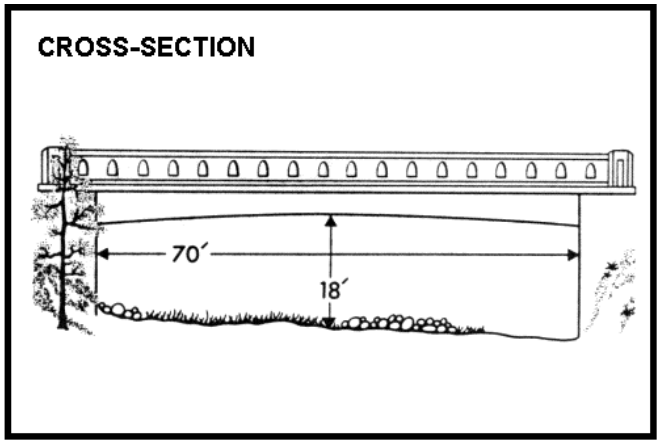

RECORDER continuous water stage.
METHOD OF MEASUREMENT wading.
DRAINAGE AREA 18.00 square miles.
LOCATION downstream side to Topanga Canyon Road bridge, 2.0 miles north of Topanga Beach.
REGULATION none.
DIVERSION none.
CHANNEL rock and gravel, natural section.
CONTROL none.
LENGTH OF RECORD at Station F54-R, January 1, 1930 to June 4, 1940; at Station F54B-R, June 5, 1940 to January 31, 1990; at Station 54C-R, October 1, 1997 to date.

RUNOFF - STREAM GAGING STATION INFORMATION

VERDUGO WASH

@ Estelle Avenue

STATION NO. F252-R

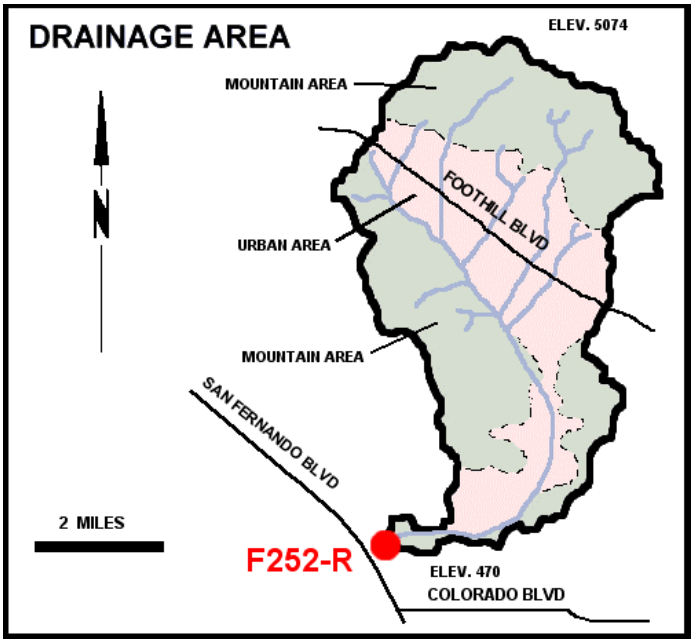

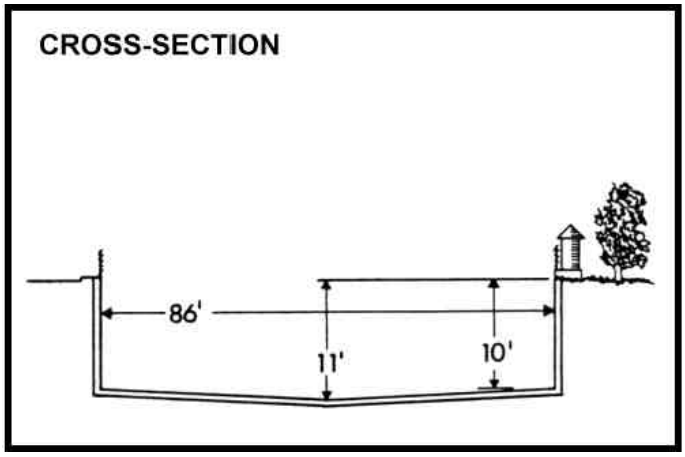

RECORDER continuous water stage.
METHOD OF MEASUREMENT wading or from Concord Street bridge.
DRAINAGE AREA 26.80 square miles.
LOCATION 800 feet east of San Fernando Road, 2.0 miles northwest of Glendale.
REGULATION partially regulated by several debris basins.
DIVERSION none.
CHANNEL concrete, rectangular section.
CONTROL channel forms control.
LENGTH OF RECORD December 2, 1935 to date.

RUNOFF - STREAM GAGING STATION INFORMATION

WALNUT CREEK
above Puente Avenue
STATION NO. F304-R

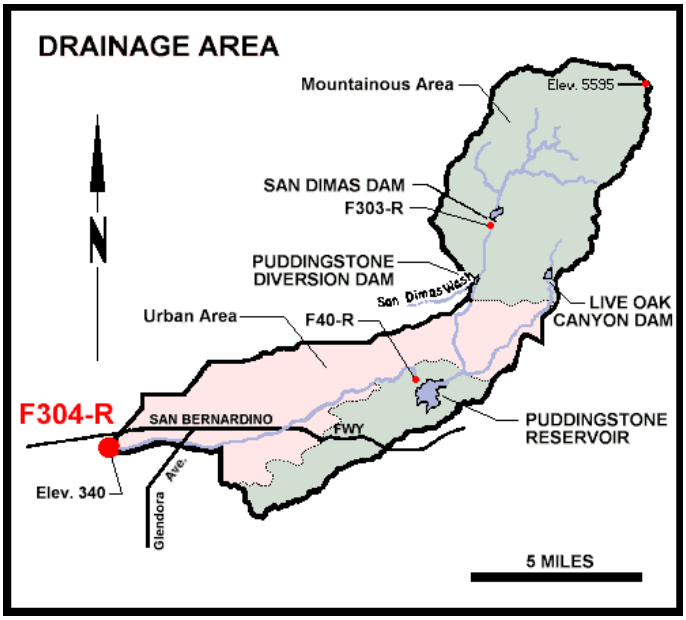

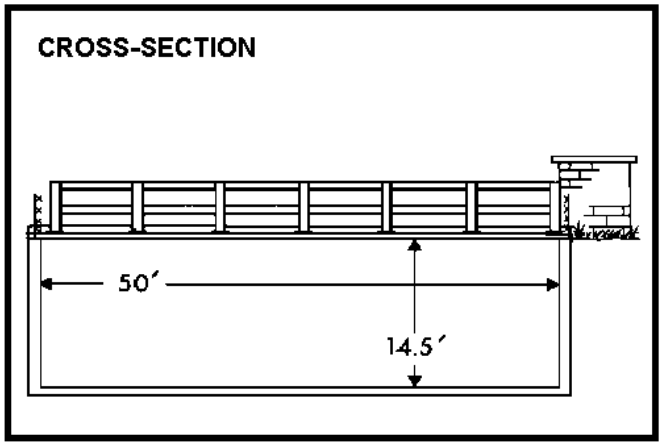

RECORDER 5 min. interval data logger.
METHOD OF MEASUREMENT wading or from footbridge.
DRAINAGE AREA 57.60 square miles.
LOCATION 845.0 feet upstream of Puente Avenue bridge, Baldwin park.
REGULATION partially regulated by San Dimas, Puddingstone Diversion, Puddingstone, and Live Oak Dams.
DIVERSION none.
CHANNEL concrete, rectangular section.
CONTROL channel forms control.
LENGTH OF RECORD October 14, 1952 to April 11, 1961, January 3, 1962 to date.
REMARKS no record during April 11, 1961 to January 3, 1962 due to channel construction.

APPENDIX C

HYDROLOGIC REPORT 2000 – 2001

RUNOFF – DAILY DISCHARGE

RUNOFF - DAILY DISCHARGE

WESTERN HYDROLOGIC SYSTEMS - (916) 885-2480

F81D-R ALHAMBRA WASH ABOVE KLINGERMAN ST.

DAILY DISCHARGE IN CUBIC FEET PER SECOND WATER YEAR OCT 2000 TO SEP 2001

Day	OCT	NOV	DEC	JAN	FEB	MAR	APR	MAY	JUN	JUL	AUG	SEP
1	.84	1.1	1.7	1.1	3.7	2.6	1.2	3.7	1.8	1.5	2.7	2.0
2	.86	.84	1.8	1.2	1.2	1.2	2.1	2.3	1.9	1.6	2.4	2.0
3	.84	.88	1.8	1.2	.93	.99	2.0	2.3	1.8	2.9	2.1	2.1
4	.93	.80	1.8	1.3	.96	9.2	1.7	2.1	1.9	3.6	2.1	2.1
5	1.6	.67	1.8	1.5	1.3	13	1.6	2.1	1.9	8.1	2.1	2.1
6	2.1	.75	1.8	1.6	1.3	76	1.2	2.1	2.2	7.8	2.1	2.2
7	2.1	.66	1.8	1.6	27	1.5	192	2.1	2.3	3.6	2.4	2.4
8	2.1	.59	1.8	7.3	2.4	1.0	1.8	2.3	2.1	2.4	2.4	2.4
9	2.1	.64	1.8	3.6	1.3	10	1.0	2.3	2.1	2.1	2.3	2.4
10	2.3	.73	1.8	296	39	8.0	.93	2.4	2.1	2.1	2.1	2.4
11	11	.83	2.3	404	13	1.1	.94	2.4	2.3	2.1	2.0	2.4
12	3.5	.68	4.6	40	390	.95	.95	2.5	2.2	2.1	2.1	2.4
13	5.8	.69	5.3	2.5	343	1.1	.84	2.4	2.1	2.1	2.1	2.3
14	6.1	.66	4.0	1.5	9.4	1.1	.86	2.3	2.1	2.1	2.0	2.4
15	6.0	.61	4.4	1.2	1.4	1.2	.84	2.4	2.1	2.1	1.8	2.7
16	5.6	.61	2.1	1.3	.90	1.2	.87	2.3	2.1	2.1	1.7	2.8
17	4.2	.67	1.0	.88	1.4	1.2	2.8	2.1	2.1	2.1	1.6	2.8
18	3.9	.75	.84	.80	5.2	1.2	7.0	2.2	2.3	2.4	1.6	2.8
19	3.8	.84	1.1	1.0	30	1.3	8.0	2.1	2.5	3.4	1.6	2.9
20	3.9	.84	.94	1.5	4.4	1.4	59	1.9	2.4	3.1	1.9	3.1
21	3.6	.89	.84	1.3	1.9	1.3	43	2.0	2.5	2.4	2.1	3.5
22	3.8	.86	.84	1.4	1.8	1.2	8.8	2.1	2.4	2.1	2.1	4.0
23	4.8	.84	.84	.92	16	1.3	8.8	2.1	2.4	1.9	2.4	4.0
24	5.3	.84	.84	53	56	1.2	9.1	2.1	2.4	2.3	2.7	3.8
25	5.0	.84	.84	1.9	361	1.2	9.3	2.1	2.4	4.3	2.8	3.7
26	38	.84	.84	58	111	1.2	11	2.1	2.6	3.1	2.7	3.7
27	35	.95	.88	4.1	54	1.2	9.9	1.9	2.2	2.3	2.5	3.7
28	5.5	.96	.92	1.1	54	1.2	9.8	1.8	1.8	2.0	2.4	3.7
29	87	1.0	.94	1.0	------	1.3	11	1.8	1.5	1.8	2.4	3.7
30	8.7	1.4	1.0	1.5	------	1.2	9.8	1.8	1.5	1.8	2.3	3.7
31	4.3	------	1.0	4.8	------	1.2	------	1.8	------	2.8	2.1	------
TOTAL	270.57	24.26	54.26	900.10	1,533.49	148.74	418.13	67.9	64.0	86.1	67.6	86.2
MEAN	8.73	.81	1.75	29.0	54.8	4.80	13.9	2.19	2.13	2.78	2.18	2.87
MAX	87	1.4	5.3	404	390	76	192	3.7	2.6	8.1	2.8	4.0
MIN	.84	.59	.84	.80	.90	.95	.84	1.8	1.5	1.5	1.6	2.0
AC-FT	537	48	108	1,790	3,040	295	829	135	127	171	134	171

CAL YEAR 2000	TOTAL*	349.09	MEAN	3.79	MAX	87	MIN	.59	AC-FT	692
WTR YEAR 2001	TOTAL	3,721.35	MEAN	10.2	MAX	404	MIN	.59	AC-FT	7,380

* Incomplete Record

Instantaneous peak is 3220 CFS @ 1:00 on 01/11/01

RUNOFF - DAILY DISCHARGE

WESTERN HYDROLOGIC SYSTEMS - (916) 885-2480

F317-R ARCADIA WASH @ GRAND AVE.

DAILY DISCHARGE IN CUBIC FEET PER SECOND WATER YEAR OCT 2000 TO SEP 2001

Day	OCT	NOV	DEC	JAN	FEB	MAR	APR	MAY	JUN	JUL	AUG	SEP
1	.31	.26	.87	.88	.69	1.2	5.4	.84	.82	.91	1.4	1.6
2	.30	.21	.94	.91	.70	.84	12	.84	.78	.95	1.5	1.6
3	.34	.29	1.1	.92	.71	.81	4.2	.79	.74	.88	1.3	2.1
4	.32	.38	1.0	.81	.72	3.5	1.1	.87	.79	.94	1.3	2.0
5	.28	.34	.86	.86	.73	12	.80	.84	.88	10	1.3	1.8
6	.31	.31	.88	.94	.75	65	.73	.79	1.0	1.9	1.3	1.5
7	.34	.40	.89	.96	18	3.9	100	.94	.96	1.9	1.2	1.5
8	.32	.49	.88	2.2	.73	.80	.93	.94	.93	2.1	1.3	1.6
9	.32	.81	.84	.80	.71	30	.82	.93	.84	2.6	2.1	1.5
10	.27	.81	.86	103	18	14	.79	.86	.83	1.8	1.8	1.4
11	1.0	1.4	.86	240	7.8	.82	.76	.90	.81	1.8	2.1	1.7
12	.25	.81	1.7	17	219	.89	.73	.92	.86	1.9	2.4	1.7
13	.24	1.2	1.5	.86	231	1.1	.72	.89	.86	1.8	2.1	1.6
14	.20	.86	1.0	.81	11	1.6	.73	.86	.90	1.7	1.5	1.5
15	.21	.88	.77	4.7	1.5	2.1	.73	.69	.87	1.7	1.6	1.3
16	.32	.85	.78	.80	.83	1.1	.81	.77	.84	1.8	1.5	1.6
17	.26	.82	.79	.73	.81	.81	.74	1.1	.87	1.7	1.4	1.4
18	.26	.85	1.1	.71	.87	.83	.83	.94	.90	1.7	1.4	2.1
19	.28	.86	.99	.75	17	.94	.86	.84	.99	1.7	1.3	2.3
20	.30	1.1	.89	.75	.92	.85	32	.93	.87	1.7	1.4	2.2
21	1.0	.83	.89	.76	.79	.85	33	1.1	1.0	1.7	1.2	2.3
22	.42	.81	.91	.90	.79	.92	.81	1.0	.87	1.6	1.2	2.2
23	.37	.80	.94	.82	12	1.0	.72	.81	.87	1.5	1.2	1.9
24	.33	1.2	.95	41	69	1.2	.74	.80	1.5	1.6	1.2	1.7
25	.32	1.0	.90	.87	148	.89	.78	.83	.86	1.7	1.3	1.7
26	19	1.0	.82	37	68	1.9	.84	.85	.99	1.5	1.4	1.9
27	42	1.0	.80	1.1	57	4.8	.85	1.3	.86	1.5	1.6	2.2
28	.34	1.4	.99	.73	58	7.2	.76	.81	.99	1.6	1.7	2.7
29	53	.94	.84	.84	------	1.2	.75	.82	1.1	1.4	1.7	2.7
30	1.4	.96	.84	.75	------	3.9	.86	.79	1.0	1.5	1.6	2.5
31	.32	------	.86	.74	------	.84	------	.74	------	1.5	1.7	------
TOTAL	124.93	23.87	29.24	464.90	946.05	167.79	205.79	27.33	27.38	58.58	47.0	55.8
MEAN	4.03	.80	.94	15.0	33.8	5.41	6.86	.88	.91	1.89	1.52	1.86
MAX	53	1.4	1.7	240	231	65	100	1.3	1.5	10	2.4	2.7
MIN	.20	.21	.77	.71	.69	.80	.72	.69	.74	.88	1.2	1.3
AC-FT	248	47	58	922	1,880	333	408	54	54	116	93	111

CAL YEAR 2000	TOTAL*	178.04	MEAN	1.94	MAX	53	MIN	.20	AC-FT	353
WTR YEAR 2001	TOTAL	2,178.66	MEAN	5.97	MAX	240	MIN	.20	AC-FT	4,320

* Incomplete Record
Instantaneous peak is 1380 CFS @ 02:20 on 01/11/01

RUNOFF - DAILY DISCHARGE

WESTERN HYDROLOGIC SYSTEMS - (916) 885-2480

F277-R ARROYO SECO BELOW DEVIL'S GATE

DAILY DISCHARGE IN CUBIC FEET PER SECOND WATER YEAR OCT 2000 TO SEP 2001

Day	OCT	NOV	DEC	JAN	FEB	MAR	APR	MAY	JUN	JUL	AUG	SEP
1	0	0	0	0 E	.50E	187 E	.78	.79	1.0	.78E	.60E	.18
2	0	0	0	0	.50E	15 E	1.9	1.3	1.0	.78E	.58E	.17
3	0	0	0	0	.50E	14 E	.78	1.3	1.0	.78E	.55E	.17
4	0	0	0	0	.50E	13 E	.78	1.3	1.0	.78E	.48E	.19
5	0	0	0	0	.50E	13 E	.78	1.3	1.0	.78E	.48E	.18
6	0	0	0	0	.50E	170 E	.78	1.3	1.0	.78E	.48E	.18
7	0	0	0	0	25 E	295 E	66	1.3	1.0	.78E	.48E	.17
8	0	0	0	.17E	26 E	235 E	1.5	1.3	1.0	.78E	.46E	.17
9	0	0	0	0 E	28 E	198 E	.79	1.3	1.0	.78E	.40E	.16
10	0	0	0	41 E	31 E	235 E	.78	1.3	1.0	.78E	.40E	.15
11	0	0	0	250 E	34 E	160 E	.78	1.3	1.0	.78E	.40E	.14
12	0	0	0	300 E	40 E	123 E	.78	1.3	1.0	.78E	.40E	.13
13	0	0	0	.11E	332 E	38 E	.78	1.3	1.0	.78E	.40E	.11
14	0	0	0	0 E	620 E	33 E	.78	1.3	1.0	.78E	.40E	.06
15	0	0	0	63 E	250 E	28 E	.78	1.3	1.0 E	.70E	.40E	.02
16	0	0	0	15 E	195 E	23 E	.78	1.3	1.0 E	.68E	.40E	0
17	0	0	0	0 E	113 E	18 E	.78	1.3	1.0 E	.68E	.40E	0
18	0	0	0	0 E	71 E	15 E	.78	1.3	1.0 E	.60E	.40E	0
19	0	0	0	0 E	30 E	13 E	.78	1.3	.93E	.68E	.40E	0
20	0	0	0	0 E	7.5 E	7.0E	23	1.3	.90E	.68E	.37E	0
21	0	0	0	0 E	6.3 E	1.0E	23	1.3	.90E	.60E	.36E	0
22	0	0	0	2.0 E	5.6 E	1.0E	.88	1.3	.90E	.68E	.35E	0
23	0	0	0	0 E	5.0 E	1.0E	.78	1.3	.90E	.68E	.32E	0
24	0	0	0	190 E	49 E	1.0E	.78	1.3	.90E	.68E	.32E	0
25	0	0	0	193 E	94 E	1.0E	.78	1.3	.90E	.68E	.32E	0
26	3.5	0	0	2.5 E	183 E	1.0E	.78	1.3	.90E	.68E	.32E	0
27	2.8	0	0	.25E	331 E	1.0E	.78	1.3	.90E	.68E	.29E	0
28	0	0	0	0 E	283 E	1.0E	.78	1.3	.81E	.68E	.24E	0
29	17	0	0	.50E	------	1.0E	.78	1.3	.78E	.68E	.24E	0
30	.08	0	0	0 E	------	1.0E	.78	1.1	.78E	.68E	.21E	0
31	0	------	0	0 E	------	1.0E	------	1.0	------	.68E	.20E	------
TOTAL	23.38	0	0	1,057.53	2,762.40	1,844.0	135.01	39.29	28.50	22.34	12.05	2.18
MEAN	.75	0	0	34.1	98.7	59.5	4.50	1.27	.95	.72	.39	.073
MAX	17	0	0	300	620	295	66	1.3	1.0	.78	.60	.19
MIN	0	0	0	0	.50	1.0	.78	.79	.78	.60	.20	0
AC-FT	46	0	0	2,100	5,480	3,660	268	78	57	44	24	4.3

CAL YEAR 2000	TOTAL*	23.38	MEAN	.25	MAX	17	MIN	0	AC-FT	46
WTR YEAR 2001	TOTAL	5,926.68	MEAN	16.2	MAX	620	MIN	0	AC-FT	11,760

* Incomplete Record Note: The existing logger replaced 9/1/2001. with bubbler type. Wm. Saunders
E=Data estimatted. Data based on Devil's Gate Dam released in Jan 2001
As of 08/29/01. A. Rivera. Due to recorder malfunction instantaneous
peak is not determined.

RUNOFF - DAILY DISCHARGE

WESTERN HYDROLOGIC SYSTEMS - (916) 885-2480

F220B-R AZUSA CONDUIT (SANDBOX 10' WEIR)

DAILY DISCHARGE IN CUBIC FEET PER SECOND WATER YEAR OCT 2000 TO SEP 2001

Day	OCT	NOV	DEC	JAN	FEB	MAR	APR	MAY	JUN	JUL	AUG	SEP
1	43	32	0	21	28	45	62	59	57	69	67	61
2	39	33	0	22	29	59	63	58	57	68	68	60
3	37	34	0	21	29	58	62	58	57	67	68	60
4	37	33	0	21	28	59	60	59	57	67	67	60
5	37	32	0	21	27	58	59	60	65	68	68	60
6	37	32	0	21	27	58	61	60	69	68	68	60
7	38	32	0	21	29	59	60	60	70	67	67	60
8	38	33	16	21	29	59	61	61	70	67	66	61
9	39	33	24	21	30	59	60	61	71	68	65	61
10	40	34	24	21	30	59	60	61	72	68	64	61
11	42	34	24	21	29	59	60	61	73	68	64	61
12	39	34	24	9.9	28	60	60	61	72	68	65	61
13	37	33	24	0	31	62	59	61	70	68	65	61
14	37	32	24	0	32	62	59	57	70	68	64	18
15	36	32	24	0	31	60	59	52	69	67	65	0
16	35	32	24	0	31	57	59	46	69	66	65	0
17	35	32	24	15	32	57	59	53	69	65	64	0
18	35	31	24	25	32	58	59	55	70	64	64	0
19	34	31	23	25	34	36	35	54	67	64	66	0
20	34	31	22	25	34	12	59	54	67	66	68	0
21	34	33	22	25	35	51	59	55	67	66	67	0
22	34	33	22	25	34	59	59	57	67	66	66	0
23	32	34	22	25	34	59	59	57	66	66	66	0
24	32	35	22	25	34	59	60	57	66	65	59	0
25	32	33	22	25	35	60	61	57	66	65	56	0
26	32	32	22	25	36	60	61	57	67	66	55	0
27	32	32	22	26	37	60	60	57	68	68	58	0
28	32	33	22	27	35	60	59	57	70	68	60	0
29	32	12	22	26	------	60	59	57	70	67	60	0
30	32	0	21	26	------	61	59	57	69	67	60	0
31	32	------	20	26	------	60	------	57	------	66	60	------
TOTAL	1,105	927	540	612.9	880	1,745	1,772	1,776	2,017	2,071	1,985	805
MEAN	35.6	30.9	17.4	19.8	31.4	56.3	59.1	57.3	67.2	66.8	64.0	26.8
MAX	43	35	24	27	37	62	63	61	73	69	68	61
MIN	32	0	0	0	27	12	35	46	57	64	55	0
AC-FT	2,190	1,840	1,070	1,220	1,750	3,460	3,510	3,520	4,000	4,110	3,940	1,600

CAL YEAR 2000	TOTAL*	2,572.0	MEAN	28.0	MAX	43	MIN	0	AC-FT	5,100
WTR YEAR 2001	TOTAL	16,235.9	MEAN	44.5	MAX	73	MIN	0	AC-FT	32,200

* Incomplete Record
SAN GABRIEL DAM AZUSA CONDUIT 10' WEIR AXSYS RECORDER STATION F-220BR DATA AS OF 10/10/01. MB
Instantaneous peak is 76 CFS @ 18:20 on 07/14/01

RUNOFF - DAILY DISCHARGE

WESTERN HYDROLOGIC SYSTEMS - (916) 885-2480

F250-R AZUSA CONDUIT (SANDBOX 20' WEIR)

DAILY DISCHARGE IN CUBIC FEET PER SECOND WATER YEAR OCT 2000 TO SEP 2001

Day	OCT	NOV	DEC	JAN	FEB	MAR	APR	MAY	JUN	JUL	AUG	SEP
1	43	32	.67	21	28	49	62	61	59	73	69	62
2	39	33	.67	23	29	62	62	61	59	75	71	62
3	38	34	.67	23	29	62	62	59	57	80	69	63
4	37	33	.67	23	28	62	62	58	60	82	69	66
5	37	32	.67	21	27	61	62	59	73	86	68	65
6	37	32	.67	21	27	60	63	60	76	87	69	68
7	38	33	.67	21	29	59	62	60	74	85	67	68
8	38	33	17	21	29	60	61	61	71	85	65	68
9	39	32	25	23	30	61	60	62	71	75	63	71
10	41	34	25	23	30	64	62	60	73	75	60	74
11	42	34	25	22	29	66	62	60	73	76	60	74
12	39	33	25	10	28	67	62	63	72	77	59	75
13	38	33	25	0	31	67	59	62	71	76	67	75
14	38	32	25	0	32	64	59	65	69	73	67	24
15	37	33	25	0	31	57	60	64	72	73	67	3.8
16	35	32	25	0	31	56	60	55	73	71	68	3.8
17	35	32	25	16	32	55	58	57	75	68	70	3.8
18	34	31	25	26	32	56	61	60	76	65	69	3.8
19	34	31	23	26	34	36	37	63	73	65	73	3.8
20	34	31	23	26	34	15	62	62	73	65	72	3.8
21	34	33	23	26	35	51	60	64	73	66	68	3.8
22	33	34	23	25	34	57	58	63	74	65	69	3.8
23	32	34	23	25	34	57	61	61	73	67	71	3.8
24	32	35	23	25	34	57	63	60	70	66	64	3.8
25	32	33	23	25	35	60	62	61	70	66	60	3.8
26	31	32	23	26	36	59	62	62	65	68	61	3.8
27	32	32	23	26	37	57	61	59	70	70	60	3.8
28	32	33	23	27	35	58	59	58	72	70	59	3.8
29	32	12	23	27	------	60	59	60	73	69	61	3.8
30	33	.82	22	26	------	61	60	60	74	69	61	3.8
31	33	------	21	27	------	62	------	59	------	69	61	------
TOTAL	1,109	928.82	567.69	631	880	1,778	1,803	1,879	2,114	2,257	2,037	975.8
MEAN	35.8	31.0	18.3	20.4	31.4	57.4	60.1	60.6	70.5	72.8	65.7	32.5
MAX	43	35	25	27	37	67	63	65	76	87	73	75
MIN	31	.82	.67	0	27	15	37	55	57	65	59	3.8
AC-FT	2,200	1,840	1,130	1,250	1,750	3,530	3,580	3,730	4,190	4,480	4,040	1,940

CAL YEAR 2000	TOTAL*	2,605.51	MEAN	28.3	MAX	43	MIN	.67	AC-FT	5,170
WTR YEAR 2001	TOTAL	16,960.31	MEAN	46.5	MAX	87	MIN	0	AC-FT	33,640

* Incomplete Record
SAN GABRIEL DAM AZUSA CONDUIT 20' WEIR AXSYS RECORDER STATION F-250R DATA AS OF 10/10/01. MB
Instantaneous peak is 90 CFS @ 09:40 on 07/06/01

RUNOFF - DAILY DISCHARGE

WESTERN HYDROLOGIC SYSTEMS - (916) 885-2480

F38C-R BALLONA CREEK ABOVE SAWTELLE

DAILY DISCHARGE IN CUBIC FEET PER SECOND WATER YEAR OCT 2000 TO SEP 2001

Day	OCT	NOV	DEC	JAN	FEB	MAR	APR	MAY	JUN	JUL	AUG	SEP
1	23	14	17	85	10	29	36	21	42	8.8	97	84
2	27	15	24	91	10	24	37	20	51	7.9	100	85
3	29	14	19	87	11	24	34	14	55	17	84	78
4	31	14	17	88	12	76	38	14	33	28	71	74
5	36	15	17	55	11	716	50	13	20	29	60	76
6	43	15	17	54	12	504	49	14	24	33	56	78
7	50	15	19	47	27	46	973	14	25	28	50	83
8	58	15	23	228	14	24	33	15	25	29	40	80
9	68	17	23	23	12	22	29	15	25	30	31	77
10	68	16	26	2,060	409	22	28	17	34	26	28	94
11	96	17	29	2,410	94	24	25	14	39	17	26	120
12	67	16	32	580	2,540	24	22	15	29	17	25	107
13	81	18	39	19	2,280	22	20	15	30	17	27	99
14	98	19	37	16	136	23	21	17	29	13	25	97
15	116	21	46	16	22	24	21	18	31	15	21	96
16	134	22	51	14	18	24	22	27	24	16	20	93
17	114	25	55	13	17	23	20	25	17	19	20	102
18	107	19	49	13	17	25	21	22	22	22	20	112
19	110	18	39	12	539	25	23	24	20	21	21	120
20	116	15	37	12	25	28	206	25	23	22	24	105
21	106	15	39	13	16	26	232	28	26	24	26	49
22	99	14	40	13	15	26	25	28	27	28	28	60
23	63	12	44	11	78	27	22	31	27	33	36	56
24	23	13	45	302	152	28	25	32	38	43	41	61
25	26	14	50	11	1,960	31	26	38	42	49	47	44
26	189	14	56	505	797	29	21	41	36	54	50	21
27	496	15	64	15	167	31	20	44	21	61	56	18
28	18	15	68	12	130	29	22	48	19	67	60	18
29	409	15	68	11	------	30	22	64	16	74	62	17
30	25	15	81	9.9	------	30	22	42	12	81	67	16
31	15	------	80	10	------	33	------	40	------	86	74	------
TOTAL	2,941	482	1,251	6,835.9	9,531	2,049	2,145	795	862	1,015.7	1,393	2,220
MEAN	94.9	16.1	40.4	221	340	66.1	71.5	25.6	28.7	32.8	44.9	74.0
MAX	496	25	81	2,410	2,540	716	973	64	55	86	100	120
MIN	15	12	17	9.9	10	22	20	13	12	7.9	20	16
AC-FT	5,830	956	2,480	13,560	18,900	4,060	4,250	1,580	1,710	2,010	2,760	4,400

CAL YEAR 2000	TOTAL*	4,674.0	MEAN	50.8	MAX	496	MIN	12	AC-FT	9,270
WTR YEAR 2001	TOTAL	31,520.6	MEAN	86.4	MAX	2,540	MIN	7.9	AC-FT	62,520

* Incomplete Record
Instantaneous peak is 19,400 @ 00:30 on 01/11/01

RUNOFF - DAILY DISCHARGE

WESTERN HYDROLOGIC SYSTEMS - (916) 885-2480

F120B-R BIG DALTON CREEK BELOW DAM

DAILY DISCHARGE IN CUBIC FEET PER SECOND WATER YEAR OCT 2000 TO SEP 2001

Day	OCT	NOV	DEC	JAN	FEB	MAR	APR	MAY	JUN	JUL	AUG	SEP
1	0	0	0	0	0	0	.20	.20	0	0	3.9	0
2	0	0	0	0	0	0	.20	.20	0	0	2.4	0
3	0	0	0	0	0	0	.20	0	0	0	1.8	0
4	0	0	0	0	0	0	.20	0	0	0	1.4	0
5	0	0	0	0	0	0	.20	0	0	0	1.0	0
6	0	0	0	0	0	0	.20	0	0	0	.62	0
7	0	0	0	0	0	0	.16	0	0	0	.31	0
8	0	0	0	0	0	.09	.10	.06	0	0	.02	0
9	0	0	0	0	0	.22	.27	4.5	0	0	0	0
10	0	0	0	0	0	.27	.26	10	0	0	0	0
11	0	0	0	0	0	.20	.25	9.5	0	0	0	0
12	0	0	0	0	0	.20	.26	9.2	0	0	0	0
13	0	0	0	0	.68	.25	.29	8.8	0	0	0	0
14	0	0	0	0	.50	.27	.22	8.4	0	0	0	0
15	0	0	0	0	.40	.30	.20	8.0	0	0	0	0
16	0	0	0	0	.38	.21	.20	7.4	0	0	0	0
17	0	0	0	0	.30	.20	.20	5.7	0	0	0	0
18	0	0	0	0	.30	.20	.23	1.6	0	0	0	0
19	0	0	0	0	.30	.20	.25	.10	0	0	0	0
20	0	0	0	0	.30	.25	.20	.10	0	0	0	0
21	0	0	0	0	.25	.25	.29	.10	0	0	0	0
22	0	0	0	0	.20	.20	.22	.10	0	0	0	0
23	0	0	0	0	.20	.20	.24	.08	0	0	0	0
24	0	0	0	.15	.10	.20	.16	0	0	9.4	0	0
25	0	0	0	.30	.14	.20	.22	0	0	9.5	0	0
26	0	0	0	.30	.24	.20	.20	0	0	8.6	0	0
27	0	0	0	.22	.20	.20	.19	0	0	7.6	0	.07
28	0	0	0	.30	.20	.20	.20	0	0	6.7	0	0
29	0	0	0	.30	------	.20	.20	0	0	5.7	0	0
30	0	0	0	.30	------	.23	.20	0	0	5.0	0	0
31	0	------	0	.18	------	.30	------	0	------	5.0	0	------
TOTAL	0	0	0	2.05	4.69	5.24	6.41	74.04	0	57.5	11.45	0.07
MEAN	0	0	0	.066	.17	.17	.21	2.39	0	1.85	.37	.002
MAX	0	0	0	.30	.68	.30	.29	10	0	9.5	3.9	.07
MIN	0	0	0	0	0	0	.10	0	0	0	0	0
AC-FT	0	0	0	4.1	9.3	10	13	147	0	114	23	.1

CAL YEAR 2000	TOTAL*	0.00	MEAN	0	MAX	0	MIN	0	AC-FT	0
WTR YEAR 2001	TOTAL	161.45	MEAN	.44	MAX	10	MIN	0	AC-FT	320

* Incomplete Record
08-07-01 @0900 valve test inflow\outflow. 08-08-01 @0930 adj. was made, water
in stilling well. A. Rodriguez.
Instantaneous peak is 20 CFS @ 15:25 on 09/27/01

RUNOFF - DAILY DISCHARGE

WESTERN HYDROLOGIC SYSTEMS - (916) 885-2480
F394-R BIG ROCK CREEK UPSTREAM OF PALLETTE CREEK

DAILY DISCHARGE IN CUBIC FEET PER SECOND WATER YEAR OCT 2000 TO SEP 2001

Day	OCT	NOV	DEC	JAN	FEB	MAR	APR	MAY	JUN	JUL	AUG	SEP
1	1.3	1.1	.97	1.1	1.8	4.0	26	31	25	9.9	5.6	3.7
2	1.2	1.1	1.1	1.1	1.8	2.4	24	32	24	9.7	5.7	3.6
3	1.2	1.1	1.0	1.0	1.8	2.2	24	33	23	9.6	5.7	3.7
4	1.4	1.1	.97	1.0	1.9	2.1	23	33	22	9.7	5.6	3.6
5	1.4	1.1	.96	1.1	1.9	1.9	25	34	22	9.9	5.5	3.5
6	1.3	1.1	.96	1.0	1.9	8.0	26	34	21	9.8	5.4	3.5
7	1.3	1.1	.96	1.0	1.9	12	27	35	21	9.7	5.4	3.5
8	1.3	1.1	.96	1.0	2.1	3.4	26	36	19	9.2	5.2	3.4
9	1.3	1.1	1.1	1.2	2.1	2.6	26	36	19	9.0	5.1	3.1
10	1.3	1.1	1.1	1.5	2.1	2.1	26	36	18	8.5	5.0	3.4
11	1.3	1.1	1.1	12	2.1	1.6	27	34	17	8.1	5.0	3.6
12	1.3	1.1	1.2	1.1	2.5	1.6	27	34	16	7.6	4.8	3.5
13	1.3	1.1	1.2	1.1	4.8	2.2	27	34	16	7.5	4.7	3.3
14	1.3	1.1	1.2	1.2	3.2	3.1	26	33	15	7.2	4.7	3.2
15	1.2	1.1	1.2	1.3	2.8	3.9	25	33	14	6.9	4.4	3.2
16	1.2	1.1	1.2	1.4	2.8	4.9	24	33	14	7.2	4.3	3.3
17	1.2	1.1	1.2	1.5	2.8	6.1	25	33	14	7.1	4.2	3.3
18	1.2	1.1	1.2	1.6	3.0	7.5	25	32	13	7.0	4.1	3.3
19	1.2	1.0	1.2	1.7	7.8	9.1	25	31	13	6.8	4.1	3.4
20	1.2	1.1	1.2	1.8	13	12	25	31	13	6.6	4.0	3.2
21	1.2	1.1	1.1	1.9	8.8	20	25	31	13	6.5	4.0	3.2
22	1.2	1.0	1.1	2.1	6.7	19	26	30	12	6.4	3.9	3.1
23	1.2	.97	1.1	1.9	3.0	18	26	30	12	6.3	3.9	3.1
24	1.2	.96	1.1	1.8	2.9	19	26	29	12	6.3	3.9	3.0
25	1.2	.96	1.1	1.8	2.8	19	25	29	12	6.4	3.8	3.0
26	1.2	.96	1.1	1.6	3.1	17	26	28	11	6.0	3.7	3.2
27	1.2	.96	1.1	1.7	24	16	27	28	11	5.9	3.7	3.2
28	1.2	.93	1.1	1.6	21	16	28	27	11	5.8	3.8	3.1
29	1.2	.94	1.1	1.5	------	20	29	27	10	5.6	3.8	3.0
30	1.2	.96	1.1	1.6	------	22	29	26	10	5.5	3.8	3.1
31	1.1	------	1.1	1.7	------	24	------	25	------	5.5	3.8	------
TOTAL	38.5	31.64	34.08	54.9	136.4	302.7	776	978	473	233.2	140.6	99.3
MEAN	1.24	1.05	1.10	1.77	4.87	9.76	25.9	31.5	15.8	7.52	4.54	3.31
MAX	1.4	1.1	1.2	12	24	24	29	36	25	9.9	5.7	3.7
MIN	1.1	.93	.96	1.0	1.8	1.6	23	25	10	5.5	3.7	3.0
AC-FT	76	63	68	109	271	600	1,540	1,940	938	463	279	197

CAL YEAR 2000	TOTAL*	104.22	MEAN	1.13	MAX	1.4	MIN	.93	AC-FT	207		
WTR YEAR 2001	TOTAL	3,298.32	MEAN	9.04	MAX	36	MIN	.93	AC-FT	6,540		

* Incomplete Record 3/12@0545-3/20@1500:logging discontinued due to power outage
Instantaneous peak was 68 CFS @ 4:45 on 01/11/01

RUNOFF - DAILY DISCHARGE

WESTERN HYDROLOGIC SYSTEMS - (916) 885-2480

F168-R BIG TUJUNGA CREEK BELOW DAM

DAILY DISCHARGE IN CUBIC FEET PER SECOND WATER YEAR OCT 2000 TO SEP 2001

Day	OCT	NOV	DEC	JAN	FEB	MAR	APR	MAY	JUN	JUL	AUG	SEP
1	.03	.06	.03	.05	7.4	75 E	25	.01	13	0E	0	0
2	.03	.04	.03	.05	13	50 E	8.5	.01	.19	0E	0	0
3	.02	.04	.03	.04	.21	50 E	2.1	.01	.06	0	0	0
4	.03	.04	.03	.05	.07	63 E	1.6	0	.02	0	0	0
5	.03	.03	.03	.05	0 E	75 E	1.3	0	.02	0	0	0
6	.04	.03	.05	.05	0 E	95	1.0	0	.02	0	0	0
7	.05	.03	.07	.05	6.3 E	125	2.7	8.3	0	0	0	0
8	.05	.03	.09	.06	20 E	125	1.5	14	.01	0	0	0
9	.04	.03	.11	.06	13 E	125	34	14	.02	0	0	0
10	.04	.04	.14	3.9	0 E	125	51	5.7	.02	0	0	0
11	.05	.04	11	27	0 E	125	51	.06	.02	0	0	0
12	.06	.03	32	51	32 E	125	18	.03	0 E	0	0	0
13	.06	.03	31	47	175 E	43	.78	.02	0 E	0	0	0
14	.05	.03	29	21	94 E	5.8	.39	.01	0 E	0	0	0
15	.04	.03	28	3.0	0 E	22	.28	.01	0 E	0	0	0
16	.03	.03	12	1.8	13 E	63	.20	.01	0 E	0	0	0
17	.03	.02	.30	.21	25 E	65	.16	.60	0 E	0	0	0
18	.03	.02	.08	.63	25 E	63	.13	.05	0 E	0	0	0
19	.04	.02	.06	1.9	25 E	58	.11	.03	0 E	0	0	0
20	.03	.02	.06	1.6	25 E	58	.13	.02	0 E	0	0	0
21	.03	.02	.06	1.1	32 E	58	.73	.01	0 E	0	0	0
22	.03	.02	.06	.12	17 E	46	.16	.01	0 E	0	0	0
23	.02	.02	.06	.08	0 E	31	.11	.01	0 E	0	0	0
24	.02	.03	.06	.40	17 E	31	62	0	0 E	0	0	0
25	.03	.03	.05	.12	49 E	31	95	0	0 E	0	0	0
26	.05	.03	.05	.11	75 E	31	34	0	0 E	0	0	0
27	.08	.03	.05	.08	75 E	31	.16	0	0 E	0	0	0
28	.07	.03	.05	.07	75 E	31	.08	0	0 E	0	0	0
29	.13	.03	.05	.06	------	31	.06	11	0 E	0	0	0
30	.12	.03	.05	.06	------	31	.05	18	0 E	0	0	0
31	.07	------	.05	.07	------	31	------	18	------	0	0	------
TOTAL	1.43	0.91	144.70	161.77	813.98	1,918.8	392.23	89.90	13.38	0	0	0
MEAN	.046	.030	4.67	5.22	29.1	61.9	13.1	2.90	.45	0	0	0
MAX	.13	.06	32	51	175	125	95	18	13	0	0	0
MIN	.02	.02	.03	.04	0	5.8	.05	0	0	0	0	0
AC-FT	2.8	1.8	287	321	1,610	3,810	778	178	27	0	0	0

CAL YEAR 2000	TOTAL*	147.04	MEAN	1.60	MAX	32	MIN	.02	AC-FT	292
WTR YEAR 2001	TOTAL	3,537.10	MEAN	9.69	MAX	175	MIN	0	AC-FT	7,020

* Incomplete Record No Data:2/5@0830-3/6@1350.Recorder inoperative.Used Dam outflow data.
No Data:6/12@1925-7/2@0700.No Power. Used Dam outflow data.
E:estimate for Feb,Mar,June as of 7/5/01,7/1,7/2
Instantaneous peak is not determined

RUNOFF - DAILY DISCHARGE

WESTERN HYDROLOGIC SYSTEMS - (916) 885-2480

F377-R BOUQUET CANYON CREEK AT URBANDALE

DAILY DISCHARGE IN CUBIC FEET PER SECOND WATER YEAR OCT 2000 TO SEP 2001

Day	OCT	NOV	DEC	JAN	FEB	MAR	APR	MAY	JUN	JUL	AUG	SEP
1	.17	0	.08	.12	0	0	0	0	0	0	0	0
2	.12	0	.04	.02	0	0	0	0	0	0	0	0
3	.05	.05	.08	0	0	0	0	0	0	0	0	0
4	.06	.12	.09	0	0	0	0	0	0	0	0	0
5	.12	.12	0	0	0	.01	0	0	0	0	0	0
6	.12	.05	0	0	.02	.01	0	0	0	0	0	0
7	.10	0	0	0	.01	.20	0	0	0	0	0	0
8	.09	0	0	.05	.03	.20	0	0	0	0	0	0
9	.07	0	0	.12	.05	.12	0	0	0	0	0	0
10	.12	0	0	.12	.04	.12	0	0	0	0	0	0
11	.12	0	.04	.12	.04	.12	0	0	0	0	0	0
12	.12	.06	0	.12	.04	0	0	0	0	0	0	0
13	.12	.12	0	.12	.02	0	0	0	0	0	0	0
14	.12	.07	.12	.12	.08	0	0	0	0	0	0	0
15	.12	.10	.12	.12	.09	0	0	0	0	0	0	0
16	.12	.12	.12	.12	.09	0	0	0	0	0	0	0
17	.12	.12	.12	.12	.08	0	0	0	0	0	0	0
18	.12	.09	0	.12	.05	0	0	0	0	0	0	0
19	.12	.07	0	.12	0	0	0	0	0	0	0	0
20	.12	0	0	.12	0	0	0	0	0	0	0	0
21	.12	.02	0	.12	0	0	0	0	0	0	0	0
22	.12	.10	0	.12	0	0	0	0	0	0	0	0
23	.12	.10	0	.12	0	0	0	0	0	0	0	0
24	.12	.09	0	.12	0	0	0	0	0	0	0	0
25	.04	.07	.06	.12	.01	0	0	0	0	0	0	0
26	.01	.08	.12	.12	.04	0	0	0	0	0	0	0
27	.01	.07	.12	.12	.09	0	0	0	0	0	0	0
28	0	.09	.12	.12	.01	0	0	0	0	0	0	0
29	.01	.01	.12	.07	------	0	0	0	0	0	0	0
30	.01	.01	.12	0	------	0	0	0	0	0	0	0
31	0	------	.12	0	------	0	------	0	------	0	0	------
TOTAL	2.78	1.73	1.59	2.66	0.79	0.78	0	0	0	0	0	0
MEAN	.090	.058	.051	.086	.028	.025	0	0	0	0	0	0
MAX	.17	.12	.12	.12	.09	.20	0	0	0	0	0	0
MIN	0	0	0	0	0	0	0	0	0	0	0	0
AC-FT	5.5	3.4	3.2	5.3	1.6	1.5	0	0	0	0	0	0

CAL YEAR 2000	TOTAL*	6.10	MEAN	.066	MAX	.17	MIN	0	AC-FT	12
WTR YEAR 2001	TOTAL	10.33	MEAN	.028	MAX	.20	MIN	0	AC-FT	20

* Incomplete Record 11/6:N/C.Reset Ght. to -0.55 12/11:N/C Reset to -0.55 12/11-1/3:logging dis-
continued due to low power.Reset to -0.56. N/C.1/3-1/31:N/C 2/1-3/7:pds of N/C
3/7@0840-03/13@1415:recorder inoperative
Instantaneous peak is 0.21 CFS @ 00:00 on 10/1/00

RUNOFF - DAILY DISCHARGE

WESTERN HYDROLOGIC SYSTEMS - (916) 885-2480

F329-R BRADBURY CHANNEL @ CENTRAL

DAILY DISCHARGE IN CUBIC FEET PER SECOND WATER YEAR OCT 2000 TO SEP 2001

Day	OCT	NOV	DEC	JAN	FEB	MAR	APR	MAY	JUN	JUL	AUG	SEP
1	.80	.38	.12	.69	.55	2.4	.86	.20E	1.5	.31	.06	.04
2	.99	.47	.59	.43	.70	2.7	1.2	.22E	3.7	.07	.42	.04
3	1.5	.26	.27	.39	.47	2.9	.78	.21E	3.7	.07	.03	.05
4	1.5	.22	.11	.37	.24	3.3	1.4	.19E	3.3	.14	.03	.06
5	1.5	.33	.12	.72	.29	3.6	.96	.11E	3.9	.44	.03	.07
6	1.0	.42	.07	.74	.38	22	.85	.15E	4.0	.08	.05	.05
7	.59	.29	.50	1.4	.74	3.6	7.1	.30E	1.2	.10	.03	.68
8	.59	.21	.58	1.7	.34	2.7	.43	.41E	.85	.08	.03	.03
9	.61	.34	.55	1.6	.62	5.1	.61	.48E	.48	.11	.04	.03
10	.59	.39	.57	24	2.4	.75	.52	.41E	.36	.10	.04	.80
11	.75	.31	.40	36	1.8	.59	.48	.38E	.45	.06	.04	.04
12	1.2	.18	.57	1.4	34	.87	.46	.67E	.56	.08	.07	.04
13	1.5	.20	.35	.88	29	1.0	.44	.96E	.63	.05	.07	.09
14	1.4	.23	.64	1.0	.65	1.1	.35	1.3 E	.54	.09	.10	.04
15	1.7	.20	.30	.97	.63	1.3	.47	1.5	.22	.33	.10	.08
16	1.8	.36	.36	.82	.61	1.4	.34	1.4	.47	.18	.12	.11
17	.60	.26	.42	1.2	.63	1.5	.20	1.3	.71	.08	.08	.35
18	.05	.23	.22	1.2	.64	1.3	.16	1.0	1.4	.09	.09	.29
19	.07	.31	.24	1.3	1.2	1.3	.25	1.5	1.9	.18	.07	.05
20	.53	.28	.20	.59	.94	.28	4.1	1.6	.86	.11	.14	.25
21	1.5	.21	.21	.73	1.4	1.4	2.9	.98	1.6	.11	.10	.07
22	1.5	.13	.32	2.5	1.6	1.6	.89	1.4	1.3	.19	.11	.05
23	.80	.28	.47	2.2	4.1	2.2	.76	1.3	1.6	.19	.07	.10
24	.10	.21	.65	6.5	11	2.1	.50	3.0	2.5	.10	.04	.11
25	.10	.22	.62	1.2	34	2.1	.23	1.8	2.1	.09	.04	.06
26	2.8	.19	.37	3.0	14	1.8	.25	1.5	.98	.14	.04	.05
27	3.1	.21	.28	1.2	13	.81	.24E	3.1	.98	.05	.06	.04
28	1.5	.22	.34	.82	5.8	1.0	.23E	2.5	.84	.05	.06	.05
29	4.4	.10	.22	.86	------	1.3	.22E	1.8	.35	.12	.07	.03
30	.86	.09	.12	.64	------	.86	.21E	1.3	.10	.15	.10	.03
31	.25	------	.95	.41	------	.81	------	.96	------	.09	.05	------
TOTAL	36.18	7.73	11.73	97.46	161.73	75.67	28.39	33.93	43.08	4.03	2.38	3.78
MEAN	1.17	.26	.38	3.14	5.78	2.44	.95	1.09	1.44	.13	.077	.13
MAX	4.4	.47	.95	36	34	22	7.1	3.1	4.0	.44	.42	.80
MIN	.05	.09	.07	.37	.24	.28	.16	.11	.10	.05	.03	.03
AC-FT	72	15	23	193	321	150	56	67	85	8.0	4.7	7.5

CAL YEAR 2000	TOTAL*	55.64	MEAN	.60	MAX	4.4	MIN	.05	AC-FT	110		
WTR YEAR 2001	TOTAL	506.09	MEAN	1.39	MAX	36	MIN	.03	AC-FT	1,000		

* Incomplete Record E : Data estimated

BRADBURY CHANNEL BELOW CENTRAL AVE. RUNOFF STATION STEVEN AXSYS RECORDER DATA AS 10/24/01.

Instantaneous peak is 195 CFS @ 01:55 on 01/11/01

RUNOFF - DAILY DISCHARGE

WESTERN HYDROLOGIC SYSTEMS - (916) 885-2480

F342-R BRANFORD STREET CHANNEL

DAILY DISCHARGE IN CUBIC FEET PER SECOND WATER YEAR OCT 2000 TO SEP 2001

Day	OCT	NOV	DEC	JAN	FEB	MAR	APR	MAY	JUN	JUL	AUG	SEP
1	.32	.20	.28	.23	.29	.35	.30	.30	.30	.36	.42	.30
2	.29	.21	.26	.20	.22	.27	.27	.29	.29	.36	.36	.30
3	.26	.17	.25	.23	.26	.22	.25	.22	.29	.34	.38	.33
4	.26	.19	.25	.23	.28	10	.47	.30	.31	.33	.33	.32
5	.27	.23	.23	.30	.24	32	.37	.29	.34	.34	.31	.30
6	.26	.22	.23	.30	.26	27	.35	.27	.33	.41	.32	.30
7	.28	.17	.24	.28	.24	.34	30	.31	.31	.36	.36	.37
8	.28	.21	.24	2.2	.21	.30	.30	.31	.32	.37	.33	.30
9	.26	.21	.27	.31	.24	6.0	1.8	.33	.30	.51	.33	.30
10	.22	.22	.27	46	17	.62	.26	.32	.30	.43	.31	.33
11	.21	.23	.26	93	10	.28	.27	.32	.31	.37	.31	.34
12	.27	.19	.23	8.2	84	.28	.26	.35	.34	.35	.31	.32
13	.27	.20	.21	.31	95	.22	.26	.31	.38	.32	.32	.30
14	.25	.23	.24	.24	2.6	.28	.25	.32	.42	.30	.32	.33
15	.24	.19	.22	.21	.36	.31	.23	.34	.41	.30	.33	.33
16	.30	.21	.23	.20	.32	.22	.27	.29	.36	.32	.36	.32
17	.25	.20	.21	.20	.27	.23	.26	.29	.36	.35	.39	.30
18	.65	.24	.24	.21	.50	.22	.29	.32	.42	.32	.33	.30
19	.29	.26	.23	.23	.97	.21	.29	.29	.39	.30	.33	.30
20	.27	.24	.22	.22	.31	.24	14	.29	.39	.31	.35	.30
21	.27	.22	.22	.21	.26	.29	6.6	.29	.38	.32	.32	.42
22	.26	.26	.25	.24	.25	.28	.27	.27	.46	.30	.35	.44
23	.26	.23	.25	.23	.92	.28	.24	.31	.39	.28	.32	.37
24	.28	.23	.24	16	9.0	.31	.25	.29	.36	.25	.36	.32
25	.26	.24	.18	.26	44	.26	.27	.31	.39	.28	.32	.30
26	7.5	.24	.21	14	14	.30	.26	.31	.38	.39	.34	.30
27	27	.26	.25	.33	3.3	.28	.28	.30	.37	.40	.33	.30
28	.28	.26	.25	.28	2.8	.27	.28	.32	.39	.42	.38	.30
29	18	.25	.26	.25	------	.30	.31	.31	.38	.47	.34	.28
30	.38	.25	.25	.21	------	.30	.29	.30	.37	.35	.32	.28
31	.19	------	.24	.25	------	.29	------	.29	------	.34	.32	------
TOTAL	60.38	6.66	7.41	185.56	288.10	82.75	59.80	9.36	10.74	10.85	10.50	9.60
MEAN	1.95	.22	.24	5.99	10.3	2.67	1.99	.30	.36	.35	.34	.32
MAX	27	.26	.28	93	95	32	30	.35	.46	.51	.42	.44
MIN	.19	.17	.18	.20	.21	.21	.23	.22	.29	.25	.31	.28
AC-FT	120	13	15	368	571	164	119	19	21	22	21	19

CAL YEAR 2000	TOTAL*	74.45	MEAN	.81	MAX	27	MIN	.17	AC-FT	148
WTR YEAR 2001	TOTAL	741.71	MEAN	2.03	MAX	95	MIN	.17	AC-FT	1,470

* Incomplete Record
Instantaneous peak is 1080 CFS @ 00:25 on 01/11/01

RUNOFF - DAILY DISCHARGE

WESTERN HYDROLOGIC SYSTEMS - (916) 885-2480

E285-R BURBANK WESTERN STORM DRAIN

DAILY DISCHARGE IN CUBIC FEET PER SECOND WATER YEAR OCT 2000 TO SEP 2001

Day	OCT	NOV	DEC	JAN	FEB	MAR	APR	MAY	JUN	JUL	AUG	SEP
1	10	12	11	10	12	35	14	14	13	15	10	12
2	9.5	13	12	10	12	20	14	13	14	14	11	12
3	9.6	13	12	11	12	16	14	10	14	13	11	12
4	9.8	13	11	12	13	52	14	9.4	42	13	11	13
5	10	13	10	12	12	169	14	13	14	13	11	12
6	9.4	13	9.0	12	13	201	13	13	15	13	10	13
7	10	12	11	10	14	76	129	13	15	13	10	13
8	10	13	9.8	21	14	58	15	13	15	13	10	13
9	11	12	8.8	12	14	61	15	12	14	13	11	13
10	9.8	12	7.9	277	64	103	14	13	12	12	10	13
11	10	11	6.6	416	44	41	14	13	13	13	11	13
12	9.7	12	8.3	57	359	23	14	14	14	13	11	13
13	9.6	12	9.4	14	417	17	15	13	13	12	11	12
14	9.5	11	11	13	62	15	15	13	13	13	11	12
15	9.6	11	8.4	14	19	15	14	13	13	13	10	12
16	9.1	12	8.2	13	15	15	15	13	13	13	11	12
17	9.2	11	9.1	13	14	14	14	13	14	14	11	12
18	10	12	9.7	13	14	13	14	13	13	14	12	11
19	9.9	12	10	13	19	11	15	13	14	14	12	10
20	10	12	10	13	17	13	40	9.9	15	12	13	10
21	10	12	11	13	14	14	27	11	14	13	12	10
22	10	12	11	13	15	14	14	13	13	13	11	11
23	9.9	11	11	12	16	14	14	12	15	11	12	11
24	10	10	11	55	27	14	14	13	15	11	12	10
25	10	10	9.5	12	165	14	14	13	14	12	12	11
26	17	10	11	51	144	14	13	13	14	12	12	11
27	48	11	10	13	98	14	13	13	13	11	12	11
28	13	11	11	13	79	13	15	13	13	11	12	11
29	85	11	10	13	------	14	15	14	14	11	11	11
30	13	12	11	12	------	14	14	13	15	11	12	12
31	12	------	11	12	------	14	------	13	------	10	12	------
TOTAL	433.6	352	310.7	1,185	1,718	1,121	579	392.3	443	389	348	352
MEAN	14.0	11.7	10.0	38.2	61.4	36.2	19.3	12.7	14.8	12.5	11.2	11.7
MAX	85	13	12	416	417	201	129	14	42	15	13	13
MIN	9.1	10	6.6	10	12	11	13	9.4	12	10	10	10
AC-FT	860	698	616	2,350	3,410	2,220	1,150	778	879	772	690	698

CAL YEAR 2000	TOTAL*	1,096.3	MEAN	11.9	MAX	85	MIN	6.6	AC-FT	2,170
WTR YEAR 2001	TOTAL	7,623.6	MEAN	20.9	MAX	417	MIN	6.6	AC-FT	15,120

* Incomplete Record
Instantaneous peak is 4620 CFS @ 00:40 on 01/11/01

RUNOFF - DAILY DISCHARGE

WESTERN HYDROLOGIC SYSTEMS - (916) 885-2480

F37B-R COMPTON CREEK NEAR GREENLEAF DRIVE

DAILY DISCHARGE IN CUBIC FEET PER SECOND WATER YEAR OCT 2000 TO SEP 2001

Day	OCT	NOV	DEC	JAN	FEB	MAR	APR	MAY	JUN	JUL	AUG	SEP
1	2.1	1.2	0	.90	.98	1.2	1.3	1.2	.72	.90	.36	1.1
2	1.8	1.1	0	.94	.84	.95	1.3	1.1	.72	.90	.36	1.1
3	1.7	1.0	0	.72	.69	.90	1.3	1.0	.71	.90	.36	1.1
4	1.4	.79	.39	.72	.54	.78	1.1	.90	.54	.90	.36	1.1
5	1.3	.74	1.2	.72	.48	99	1.1	.87	.54	.90	.36	1.1
6	1.3	.87	1.3	.72	.36	99	1.1	.72	.54	.90	.36	1.1
7	1.1	1.0	1.3	.72	.21	.70	116	1.0	.54	.90	.36	1.1
8	.95	.94	1.3	38	1.3	.37	8.7	1.3	.98	.90	.36	1.1
9	.87	.70	1.3	14	.76	1.1	7.7	1.3	1.4	.90	.36	1.1
10	.72	1.2	1.3	352	13	1.0	7.1	1.4	1.3	.90	.36	.94
11	1.9	4.2	1.1	501	3.6	.91	6.5	1.4	1.3	.90	.36	.90
12	1.5	2.8	1.1	80	331	2.4	5.9	1.5	1.3	.90	.36	.90
13	1.6	2.0	1.1	12	444	1.5	5.4	1.5	1.3	.90	.43	.90
14	1.9	1.6	1.1	2.0	15	1.3	2.0	1.3	1.3	.90	1.3	.90
15	1.9	1.2	1.1	1.5	.47	1.3	1.7	1.5	1.2	.90	.90	.90
16	2.1	.86	1.1	1.5	.21	1.1	1.5	1.2	1.1	.90	.90	.90
17	2.1	.69	1.1	1.5	.13	1.1	2.8	.72	1.1	.90	.98	.90
18	2.0	.38	1.1	1.5	.01	.93	2.4	.76	1.1	.90	1.1	.90
19	1.6	.79	1.1	2.1	85	.88	2.3	.90	1.1	.90	1.1	.90
20	1.5	.69	1.1	1.7	.83	.54	1.2	.97	1.1	.90	1.1	.97
21	1.3	.72	1.1	1.4	.54	.54	81	1.2	1.3	.90	1.1	.94
22	1.3	.74	1.1	1.3	.39	.39	5.1	1.2	1.3	.90	1.1	.86
23	1.6	.72	1.1	1.1	30	.35	4.0	1.1	1.3	.90	1.1	.54
24	2.1	.72	1.1	57	41	.18	3.5	1.1	1.3	.90	1.1	.59
25	1.9	.54	1.1	3.1	525	.14	3.2	1.1	1.7	.90	1.1	.72
26	1.2	.54	1.0	103	195	.54	2.9	1.1	.90	.85	1.1	.59
27	62	.83	.90	2.8	30	1.1	2.4	1.1	.72	.51	1.1	.62
28	4.6	.72	.90	1.8	34	1.1	2.1	1.1	.73	.36	1.1	.74
29	109	.57	.90	1.5	------	1.1	1.9	1.1	.90	.36	1.1	.90
30	7.4	.54	.90	1.3	------	1.1	1.8	1.0	.90	.36	1.1	.90
31	2.5	------	.90	1.2	------	1.2	------	.72	------	.36	1.1	------
TOTAL	226.24	31.39	30.09	1,189.74	1,755.34	224.70	286.3	34.36	30.94	25.30	24.23	27.31
MEAN	7.30	1.05	.97	38.4	62.7	7.25	9.54	1.11	1.03	.82	.78	.91
MAX	109	4.2	1.3	501	525	99	116	1.5	1.7	.90	1.3	1.1
MIN	.72	.38	0	.72	.01	.14	1.1	.72	.54	.36	.36	.54
AC-FT	449	62	60	2,360	3,480	446	568	68	61	50	48	54

CAL YEAR 2000	TOTAL*	287.72	MEAN	3.13	MAX	109	MIN	0	AC-FT	571
WTR YEAR 2001	TOTAL	3,885.94	MEAN	10.6	MAX	525	MIN	0	AC-FT	7,710

* Incomplete Record

Instantaneous peak is 3250 CFS @ 00:20 on 01/11/01

RUNOFF - DAILY DISCHARGE

WESTERN HYDROLOGIC SYSTEMS - (916) 885-2480

F354-R COYOTE CREEK BELOW SPRING STREET

DAILY DISCHARGE IN CUBIC FEET PER SECOND WATER YEAR OCT 2000 TO SEP 2001

Day	OCT	NOV	DEC	JAN	FEB	MAR	APR	MAY	JUN	JUL	AUG	SEP
1	22	16	7.5E	16	11	83	26	10	13	14	18	15
2	21	21	7.9E	71	12	30	35	14	17	13	21	13
3	14	12	8.4E	35	11	17	42	27	23	12	23	14
4	9.8	11	8.8E	22	11	13	55	8.7	22	11	22	17
5	14	8.2	9.3E	31	12	13	73	9.0	26	21	22	15
6	3.6	8.5	9.7E	51	14	445	69	11	22	18	19	16
7	9.1	17	12	46	12	122	590	13	22	12	20	19
8	12	13	9.9	188	11	14	45	12	22	10	19	18
9	22	14	8.8	38	10	26	76	13	28	9.8	16	17
10	46	18	7.5	748	284	48	34	14	33	9.3	14	21
11	49	8.5	13	3,030	48	12	13	18	36	9.9	15	20
12	15	23	25	256	2,870	11	11	19	43	9.7	12	24
13	15	13	7.6	23	2,770	12	10	23	47	9.5	13	23
14	8.3	12	15	15	270	16	8.7	23	43	8.7	10	28
15	5.0	6.0E	8.6	9.2	40	18	7.7	28	43	8.7	8.7	27
16	11	8.4E	15	8.6	18	24	7.6	29	39	9.2	9.3	35
17	10	14 E	13	9.3	13	18	7.4	30	34	9.6	9.1	31
18	4.5	14 E	11	8.1	10	17	7.1	28	34	10	11	22
19	9.7	12 E	9.1	9.0	362	16	8.8	27	30	11	9.9	23
20	14	8.1E	8.2	8.6	118	16	11	30	30	15	12	25
21	21	14 E	8.5	11	24	20	271	30	29	12	10	25
22	24	12 E	9.0	11	16	19	15	33	23	12	9.2	24
23	23	19 E	11	9.7	372	24	10	29	21	13	9.5	26
24	19	15 E	9.9	345	388	25	8.0	22	19	13	9.2	33
25	32	8.4E	15	15	2,470	22	7.7	25	16	14	12	27
26	44	4.8E	15	603	1,590	26	8.4	22	15	15	10	26
27	216 E	6.0E	14	43	623	24	9.9	20	14	17	11	26
28	5.4E	13 E	15	14	650	23	9.2	26	14	17	12	32
29	41 E	15 E	15	12	------	26	8.6	21	13	17	12	34
30	37 E	7.1E	13	11	------	30	9.9	16	12	17	12	43
31	30 E	------	15	10	------	19	------	14	------	16	12	------
TOTAL	807.4	372.0	355.7	5,707.5	13,040	1,229	1,495.0	644.7	783	394.4	422.9	719
MEAN	26.0	12.4	11.5	184	466	39.6	49.8	20.8	26.1	12.7	13.6	24.0
MAX	216	23	25	3,030	2,870	445	590	33	47	21	23	43
MIN	3.6	4.8	7.5	8.1	10	11	7.1	8.7	12	8.7	8.7	13
AC-FT	1,600	738	706	11,320	25,860	2,440	2,970	1,280	1,550	782	839	1,430

CAL YEAR 2000	TOTAL*	1,535.1	MEAN	16.7	MAX	216	MIN	3.6	AC-FT	3,040
WTR YEAR 2001	TOTAL	25,970.6	MEAN	71.2	MAX	3,030	MIN	3.6	AC-FT	51,510

* Incomplete Record

Instantaneous peak is 15,300 CFS @ 2:05 On 01/11/01

–

RUNOFF - DAILY DISCHARGE

WESTERN HYDROLOGIC SYSTEMS - (916) 885-2480

F274B-R DALTON WASH @ MERCED AVE.

DAILY DISCHARGE IN CUBIC FEET PER SECOND WATER YEAR OCT 2000 TO SEP 2001

Day	OCT	NOV	DEC	JAN	FEB	MAR	APR	MAY	JUN	JUL	AUG	SEP
1	.46	1.8	.14	1.1	1.8	3.1	2.3	.97	.74	1.5	1.3	1.7
2	2.2	2.4	.14	1.1	1.6	3.1	2.3	1.3	1.0	1.9	1.5	1.5
3	1.1	3.1	.14	1.0	1.7	2.5	157	.94	1.6	2.0	1.6	1.8
4	.87	2.0	93	1.0	1.6	2.7	266	1.1	1.0	1.9	1.7	1.5
5	2.0	1.8	189	.94	1.3	2.8	270	1.3	.47	4.2	1.5	1.5
6	.45	3.0	191	1.2	1.7	51	272	1.1	.54	1.6	1.7	1.6
7	.50	2.9	183	1.4	9.0	3.3	175	2.0	.68	1.4	1.5	1.8
8	.55	1.9	186	6.6	1.3	3.9	2.8	1.6	.68	1.2	1.3	1.7
9	.48	.48	182	2.9	1.5	50	61	1.2	.84	1.1	1.4	1.8
10	.87	.39	184	243	45	20	216	1.0	.30	1.3	1.8	1.7
11	7.5	.29	184	408	2.6	2.7	276	1.1	.55	1.5	1.8	1.8
12	5.9	.22	182	6.4	338	2.5	104	1.2	.65	1.2	1.6	1.7
13	4.7	.22	190	1.0	182	3.1	1.5	.63	.52	1.3	1.4	1.3
14	1.9	.22	182	1.3	10	3.0	1.4	.72	.86	1.7	1.4	1.4
15	1.8	.20	177	4.8	3.2	1.8	1.3	.74	1.6	1.5	1.8	1.3
16	1.5	.20	188	1.8	3.1	1.5	35	1.3	1.6	1.5	1.8	1.6
17	.37	.16	189	1.3	3.3	1.7	93	.90	1.6	1.6	1.2	1.5
18	.33	.15	198	2.6	3.6	1.4	91	.72	2.5	1.5	1.3	1.3
19	.26	.15	34	1.4	12	1.3	35	.81	2.0	1.5	1.2	1.8
20	.23	.15	.96	1.5	3.9	.99	116	.33	2.1	1.4	1.5	1.7
21	.23	.14	1.1	1.4	1.7	3.3	17	.59	2.2	1.7	1.5	1.6
22	.33	.14	1.1	1.1	1.6	4.1	3.0	.61	2.2	1.1	1.5	1.6
23	1.5	.14	1.1	1.2	32	4.1	2.2	.75	1.3	1.7	2.0	1.4
24	.21	.14	.99	55	66	4.4	.96	.76	1.3	1.3	1.6	1.4
25	.22	.14	1.1	1.8	153	4.3	1.2	.76	2.1	1.3	1.8	1.3
26	7.4	.15	.85	22	16	3.8	121	.98	1.9	1.3	1.7	1.3
27	111	.14	1.1	7.6	81	2.7	196	1.5	2.2	1.4	1.7	1.1
28	3.2	.14	1.2	1.9	16	1.8	199	.92	1.6	1.7	1.5	1.3
29	56	.14	1.3	1.9	------	.99	153	.66	1.9	1.7	1.6	1.4
30	3.4	.14	1.1	3.0	------	1.2	29	.80	1.7	1.4	1.5	1.3
31	2.1	------	.93	1.4	------	2.4	------	.82	------	1.6	1.5	------
TOTAL	219.56	23.14	2,745.25	788.64	995.5	195.48	2,900.96	30.11	40.23	49.0	48.2	45.7
MEAN	7.08	.77	88.6	25.4	35.6	6.31	96.7	.97	1.34	1.58	1.55	1.52
MAX	111	3.1	198	408	338	51	276	2.0	2.5	4.2	2.0	1.8
MIN	.21	.14	.14	.94	1.3	.99	.96	.33	.30	1.1	1.2	1.1
AC-FT	435	46	5,450	1,560	1,970	388	5,750	60	80	97	96	91

CAL YEAR 2000	TOTAL*	2,987.95	MEAN	32.5	MAX	198	MIN	.14	AC-FT	5,930
WTR YEAR 2001	TOTAL	8,081.77	MEAN	22.1	MAX	408	MIN	.14	AC-FT	16,030

* Incomplete Record
10-11-01
Instantaneous peak is 2280 CFS @ 02:20 on 01/11/01

RUNOFF - DAILY DISCHARGE

WESTERN HYDROLOGIC SYSTEMS - (916) 885-2480

F271-R EATON WASH BELOW EATON DAM

DAILY DISCHARGE IN CUBIC FEET PER SECOND WATER YEAR OCT 2000 TO SEP 2001

Day	OCT	NOV	DEC	JAN	FEB	MAR	APR	MAY	JUN	JUL	AUG	SEP
1	0	0	0	0	.01	0	1.8	8.0	0	0	0	0
2	0	0	0	0	0	0	.69	3.2	0	0	0	0
3	0	0	0	0	0	0	.46	0	0	0	0	0
4	0	0	0	0	0	0	0	0	0	0	0	0
5	0	0	0	0	0	0	0	0	0	0	0	0
6	0	0	0	0	0	.04	0	0	0	0	0	0
7	0	0	0	0	.01	21	.01	0	0	0	0	0
8	0	0	0	0	0	32	0	0	0	0	0	0
9	0	0	0	0	0	31	0	0	0	0	0	0
10	0	0	0	.02	.06	31	0	0	0	0	0	0
11	0	0	0	.06	.11	28	.02	0	0	0	0	0
12	0	0	0	0	.18	26	.03	0	1.4	0	0	0
13	0	0	0	0	.11	24	.05	0	0	0	0	0
14	0	0	0	0	.08	23	.03	0	0	0	0	0
15	0	0	0	0	.09	21	.01	0	0	0	0	0
16	0	0	0	8.1	.09	20	18	0	0	0	0	0
17	0	0	0	15	.09	18	6.1	0	0	0	0	0
18	0	0	0	7.8	.09	16	.11	0	0	0	0	0
19	0	0	0	.05	.09	14	.12	0	0	0	0	0
20	0	0	0	0	.09	11	.14	0	0	0	0	0
21	0	0	0	0	.09	4.2	.12	0	0	0	0	0
22	0	0	0	0	.09	.03	.13	0	0	0	0	0
23	0	0	0	0	.09	.01	.15	0	0	0	0	0
24	0	0	0	0	.10	.03	.15	0	0	0	0	0
25	0	0	0	.05	.12	.01	.14	0	0	0	0	0
26	0	0	0	.06	.10	0	.13	0	0	0	0	0
27	0	0	0	.06	.11	0	.14	0	0	0	0	0
28	0	0	0	.07	.13	0	.14	0	0	0	0	0
29	0	0	0	.06	------	1.5	.13	0	0	0	0	0
30	0	0	0	.05	------	2.2	.10	0	0	0	0	0
31	0	------	0	.03	------	2.0	------	0	------	0	0	------
TOTAL	0	0	0	31.41	1.93	326.02	28.90	11.2	1.4	0	0	0
MEAN	0	0	0	1.01	.069	10.5	.96	.36	.047	0	0	0
MAX	0	0	0	15	.18	32	18	8.0	1.4	0	0	0
MIN	0	0	0	0	0	0	0	0	0	0	0	0
AC-FT	0	0	0	62	3.8	647	57	22	2.8	0	0	0

CAL YEAR 2000	TOTAL*	0.00	MEAN	0	MAX	0	MIN	0	AC-FT	0
WTR YEAR 2001	TOTAL	400.86	MEAN	1.10	MAX	32	MIN	0	AC-FT	795

* Incomplete Record
Instantaneous peak is 206 CFS @ 07:15 on 04/16/01

RUNOFF - DAILY DISCHARGE

WESTERN HYDROLOGIC SYSTEMS - (916) 885-2480

F318-R EATON WASH @ LOFTUS DR.

DAILY DISCHARGE IN CUBIC FEET PER SECOND WATER YEAR OCT 2000 TO SEP 2001

Day	OCT	NOV	DEC	JAN	FEB	MAR	APR	MAY	JUN	JUL	AUG	SEP
1	.39	.35	.32	.32	.29	.52	.38	.78	.28	.26	.49	.31
2	.41	.31	.52	.31	.32	.29	.77	.24	.27	.31	.54	.33
3	.38	.31	.38	.32	.33	.21	.32	.20	1.0	.38	.71	.34
4	.41	.37	.33	.30	.32	1.0	.28	.25	1.1	.38	.56	.35
5	.49	.38	.31	.41	.38	9.7	.33	.27	.33	2.4	.49	.28
6	.62	.38	.33	.45	.31	74	.32	.25	.30	.29	.40	.32
7	.42	.35	.33	.40	13	.37	135	.27	.30	.26	.51	.31
8	.37	.36	.34	1.3	.27	.35	.29	.26	.29	.25	.44	.31
9	.46	.35	.35	.42	.28	13	.29	.27	.29	.31	.31	.32
10	.48	.37	.35	201	14	17	.21	.26	.45	.28	.30	.41
11	4.3	.48	.29	341	2.0	.20	.25	.29	.30	.25	.31	.38
12	.42	.38	.24	11	280	.26	.24	.34	.31	.25	.31	.29
13	.59	.30	.24	.31	352	.28	.24	.27	.35	.25	.30	.60
14	.42	.27	.25	.25	8.5	.24	.26	.27	.31	.26	.32	.66
15	.35	.28	.29	2.2	.59	.21	.27	.28	.34	.22	.31	.35
16	.43	.27	.34	.33	.54	.27	.24	.25	.33	.30	.29	.31
17	.41	.26	.38	.24	.66	.27	.32	.27	.34	.28	.31	.52
18	.44	.25	.43	.32	.75	.25	.34	.22	.38	.26	.33	.31
19	.46	.30	.38	.28	11	.28	.34	.24	.40	.28	.45	.50
20	.38	.30	.29	.25	.86	.30	18	.21	.38	.29	.35	.85
21	.51	.30	.30	.23	.39	.31	64	.81	.42	.34	.31	.89
22	.45	.31	.36	.27	.23	.29	.40	.23	.37	.30	.31	.93
23	.42	.32	.38	.29	5.3	.31	.31	.25	.26	.30	.32	.84
24	.45	.35	.36	46	43	.55	.21	.27	.27	.31	.28	.76
25	.68	.37	.35	.32	216	.32	.23	.24	.27	.28	.31	.30
26	32	.34	.35	23	103	.31	.24	.26	.25	.31	.29	.27
27	43	.34	.33	.34	32	.29	.22	.32	.35	.84	.80	.29
28	.50	.30	.33	.27	35	.33	.25	.23	.28	.41	.29	.34
29	88	.31	.34	.43	------	.31	.22	.31	.29	.43	.31	.41
30	.83	.31	.31	.33	------	.30	.54	.31	.28	.42	.41	.37
31	.36	------	.31	.28	------	.36	------	.26	------	.44	.60	------
TOTAL	179.83	9.87	10.41	633.17	1,121.32	122.68	225.31	9.18	11.09	12.14	12.26	13.45
MEAN	5.80	.33	.34	20.4	40.0	3.96	7.51	.30	.37	.39	.40	.45
MAX	88	.48	.52	341	352	74	135	.81	1.1	2.4	.80	.93
MIN	.35	.25	.24	.23	.23	.20	.21	.20	.25	.22	.28	.27
AC-FT	357	20	21	1,260	2,220	243	447	18	22	24	24	27

CAL YEAR 2000	TOTAL*	200.11	MEAN	2.18	MAX	88	MIN	.24	AC-FT	397
WTR YEAR 2001	TOTAL	2,360.71	MEAN	6.47	MAX	352	MIN	.20	AC-FT	4,680

* Incomplete Record
Instantaneous peak is 1760 CFS @ 02:30 on 01/11/01

RUNOFF - DAILY DISCHARGE

WESTERN HYDROLOGIC SYSTEMS - (916) 885-2480

U7-R FISH CREEK

DAILY DISCHARGE IN CUBIC FEET PER SECOND WATER YEAR OCT 2000 TO SEP 2001

Day	OCT	NOV	DEC	JAN	FEB	MAR	APR	MAY	JUN	JUL	AUG	SEP
1	.15	.13	1.1	1.0	2.6	2.6	2.3	1.9	.73	.04	.08	.07E
2	.15	.13	1.2	1.0	2.6	2.5	2.4	1.9	1.4	.04	.08	.07E
3	.15	.13	1.3	1.0	2.6	2.4	2.5	1.8	1.6	.04	.08	.07E
4	.15	.14	1.4	1.0	2.6	2.4	2.6	1.7	1.5	.04	.09	.07E
5	.15	.15	1.4	.99	2.6	2.4	2.6	1.6	1.1	.04	.10	.06
6	.15	.15	1.5	.94	2.6	2.6	2.7	1.6	.78	.06	.08	.06
7	.15	.15	1.5	.94	2.6	2.5	3.5	1.4	.57	.06	.08	.06
8	.15	.17	1.5	.78	2.6	2.4	2.9	1.1	.32	.06	.08	.06
9	.15	.18	1.4	.23	2.6	2.3	2.9	.93	.21	.06	.08	.06
10	.15	.19	1.4	.09	2.6	2.6	3.0	.84	.23	.06	.08	.06
11	.15	.22	1.4	12	2.5	2.5	3.0	.70	.24	.08	.08	.05
12	.15	.24	1.4	2.8	8.3	2.4	3.1	.61	.57	.08	.08	.04
13	.15	.27	1.4	2.8	25	2.4	3.2	.62	1.2	.06	.08	.04
14	.15	.29	1.4	2.7	3.8	2.4	3.3	.51	.61	.06	.08	.04
15	.15	.32	1.3	2.7	1.2	2.4	3.4	.40	.19	.06	.08	.04
16	.15	.36	1.3	2.7	1.1	2.4	2.9	.33	.10	.08	.08	.04
17	.15	.40	1.3	2.7	1.1	2.4	2.2	.27	.08	.08	.08	.04
18	.15	.43	1.3	2.7	1.0	2.4	2.2	.20	.08	.06	.08	.03
19	.15	.47	1.3	2.7	1.0	2.4	4.1	.18	.08	.06	.08	.02
20	.15	.53	1.2	2.7	.95	2.4	6.6	.16	.08	.07	.08	.02
21	.15	.58	1.2	2.6	.87	2.4	10	.14	.06	.07	.08	.02
22	.15	.63	1.2	2.6	.87	2.4	5.1	.11	.06	.06	.07	.02
23	.15	.68	1.2	2.6	.87	2.4	4.0	.37	.08	.06	.06	0
24	.15	.74	1.2	2.6	.87	2.3	3.3	.58	.07	.06	.08	0
25	.15	.79	1.2	2.6	3.1	2.3	2.7	.53	.06	.07	.08	0
26	.15	.83	1.1	2.6	12	2.3	2.2	.54	.06	.08	.08	0
27	.15	.88	1.1	2.6	4.2	2.3	2.2	.65	.06	.07	.08E	0
28	.15	.94	1.1	2.6	3.4	2.3	2.2	.74	.06	.06	.08E	0
29	.15	1.0	1.1	2.6	------	2.3	2.1	.50	.05	.06	.08E	0
30	.15	1.1	1.1	2.6	------	2.3	2.0	.31	.04	.07	.08E	0
31	.13	------	1.0	2.6	------	2.3	------	.44	------	.08	.08E	------
TOTAL	4.63	13.22	39.5	73.07	98.13	74.4	97.2	23.66	12.27	1.93	2.48	1.04
MEAN	.15	.44	1.27	2.36	3.50	2.40	3.24	.76	.41	.062	.080	.035
MAX	.15	1.1	1.5	12	25	2.6	10	1.9	1.6	.08	.10	.07
MIN	.13	.13	1.0	.09	.87	2.3	2.0	.11	.04	.04	.06	0
AC-FT	9.2	26	78	145	195	148	193	47	24	3.8	4.9	2.1

CAL YEAR 2000	TOTAL*	57.35	MEAN	.62	MAX	1.5	MIN	.13	AC-FT	114		
WTR YEAR 2001	TOTAL	441.53	MEAN	1.21	MAX	25	MIN	0	AC-FT	876		

* Incomplete Record ABOVE DATA ARE BASED ON MEASUREMENT AND VISUAL ESTIMATION. M.B.
E : Data estimated due to the low bettery. Data as up 10/10/01...Revised 4/1/02
Instantaneous peak is 98 CFS @ 10:25 on 4/16/01

RUNOFF - DAILY DISCHARGE

WESTERN HYDROLOGIC SYSTEMS - (916) 885-2480

F251-R LEAKAGE @ TOE OF COGSWELL DAM

DAILY DISCHARGE IN CUBIC FEET PER SECOND WATER YEAR OCT 2000 TO SEP 2001

Day	OCT	NOV	DEC	JAN	FEB	MAR	APR	MAY	JUN	JUL	AUG	SEP
1	4.0	4.1	2.5	2.0	1.8	6.4	12	12	13	13	9.9	8.8
2	4.0	4.0	2.5	2.0	1.8	5.9	11	13	13	13	9.6	8.8
3	3.9	3.9	2.5	2.0	1.8	5.6	11	14	13	13	9.6	8.7
4	3.8	3.7	2.5	2.0	1.8	5.2	11	14	13	12	9.6	8.6
5	3.8	3.5	2.5	1.9	1.8	5.1	11	14	13	12	9.6	8.6
6	3.8	3.4	2.4	1.9	1.8	6.6	11	14	13	12	9.6	8.6
7	3.8	3.4	2.4	1.9	1.9	6.7	13	14	13	12	9.6	8.6
8	3.8	3.3	2.4	1.9	1.8	6.6	13	14	13	12	9.8	8.5
9	3.8	3.2	2.4	1.8	1.8	6.8	13	14	13	12	10	8.4
10	3.8	3.1	2.4	2.1	1.9	7.4	13	14	13	12	10	8.3
11	3.8	3.0	2.3	6.6	2.0	7.4	13	14	13	12	10	8.3
12	3.8	2.9	2.3	6.6	2.8	7.4	12	14	13	11	10	8.3
13	3.8	2.9	2.3	5.8	8.0	7.5	12	14	13	11	10	8.3
14	3.8	2.8	2.3	5.2	8.2	7.4	12	14	12	11	10	8.4
15	3.7	2.8	2.3	4.5	6.5	7.3	12	14	12	11	9.6	8.4
16	3.7	2.7	2.3	4.0	5.5	7.2	12	13	12	11	9.9	8.4
17	3.7	2.7	2.2	3.7	4.9	7.2	11	13	13	11	9.8	8.4
18	3.7	2.7	2.2	3.4	4.3	7.0	11	13	13	11	9.6	8.4
19	3.7	2.7	2.2	3.0	4.1	7.0	11	13	12	11	9.6	8.4
20	3.7	2.7	2.2	2.6	4.3	9.0	11	13	12	11	9.6	8.4
21	3.7	2.7	2.2	2.4	4.0	11	13	13	13	11	9.6	8.4
22	3.7	2.6	2.2	2.3	3.8	11	12	13	13	11	9.6	8.4
23	3.7	2.6	2.2	2.2	3.7	11	12	13	13	11	9.5	8.4
24	3.7	2.6	2.1	2.2	3.7	11	12	13	13	11	9.5	8.4
25	3.7	2.6	2.1	2.2	5.2	11	11	13	13	11	9.5	8.4
26	3.7	2.6	2.1	2.1	6.9	11	11	13	13	11	9.5	8.4
27	4.0	2.5	2.1	2.1	6.7	11	11	13	13	11	9.2	8.4
28	4.0	2.5	2.1	2.0	6.9	11	11	13	13	11	8.9	8.4
29	4.1	2.5	2.1	1.9	------	11	10	13	13	10	8.8	8.4
30	4.5	2.5	2.1	1.8	------	11	10	13	13	10	8.7	8.3
31	4.3	------	2.0	1.8	------	11	------	13	------	10	8.6	------
TOTAL	119.0	89.2	70.4	87.9	109.7	257.7	349	415	385	352	296.8	253.5
MEAN	3.84	2.97	2.27	2.84	3.92	8.31	11.6	13.4	12.8	11.4	9.57	8.45
MAX	4.5	4.1	2.5	6.6	8.2	11	13	14	13	13	10	8.8
MIN	3.7	2.5	2.0	1.8	1.8	5.1	10	12	12	10	8.6	8.3
AC-FT	236	177	140	174	218	511	692	823	764	698	589	503

CAL YEAR 2000	TOTAL*	278.6	MEAN	3.03	MAX	4.5	MIN	2.0	AC-FT	553		
WTR YEAR 2001	TOTAL	2,785.2	MEAN	7.63	MAX	14	MIN	1.8	AC-FT	5,520		

* Incomplete Record
COGSWELL DAM LEAKAGE AREA STATION AXSYS RECORDER F-251R DATA AS OF 10-04-2001.MB
Instantaneous peak is 14 CFS @ 11:55 on 04/07/01

RUNOFF - DAILY DISCHARGE

WESTERN HYDROLOGIC SYSTEMS - (916) 885-2480
L1-R LITTLE ROCK CK. ABOVE LITTLE ROCK DAM

DAILY DISCHARGE IN CUBIC FEET PER SECOND WATER YEAR OCT 2000 TO SEP 2001

Day	OCT	NOV	DEC	JAN	FEB	MAR	APR	MAY	JUN	JUL	AUG	SEP
1	0	0	0	2.1	8.1	28	108	58	7.0	1.1	0	0
2	0	0	0	2.0	8.4	24	96	58	6.7	1.1	0	0
3	0	0	0	2.0	8.8	21	75	46	6.4	.96	0	0
4	0	0	0	2.0	9.4	22	55	36	6.0	.88	0	0
5	0	0	0	2.0	10	65	41	32	5.7	.76	0	0
6	0	0	0	2.0	9.9	154	34	31	5.3	.76	0	0
7	0	0	0	1.8	11	127	36	31	5.0	1.2	0	0
8	0	0	.29	1.8	11	97	31	31	4.6	1.5	0	0
9	0	0	1.7	2.0	11	85	30	30	4.3	1.4	0	0
10	0	0	1.9	2.5	11	61	27	28	4.0	1.2	0	0
11	0	0	1.9	3.1	12	43	27	25	3.8	1.2	0	0
12	0	0	1.9	2.6	11	34	25	22	3.6	1.2	0	0
13	0	0	2.2	2.8	13	32	28	20	3.3	1.2	0	0
14	0	0	2.2	3.0	11	38	32	18	3.2	1.1	0	0
15	0	0	2.0	3.1	12	52	36	16	3.0	1.1	0	0
16	0	0	2.2	3.1	12	58	40	15	2.9	1.1	0	0
17	0	0	2.2	3.2	13	65	48	14	2.8	1.1	0	0
18	0	0	2.2	3.6	14	79	54	13	2.7	1.1	0	0
19	0	0	2.2	3.9	16	111	51	12	2.6	1.1	0	0
20	0	0	2.2	4.1	23	133	46	12	2.5	1.1	0	0
21	0	0	2.2	4.4	22	141	43	11	2.4	1.1	0	0
22	0	0	2.3	4.6	22	124	35	11	2.2	1.1	0	0
23	0	0	2.3	4.8	22	108	36	11	2.1	1.1	0	0
24	0	0	2.2	5.2	18	106	42	10	1.9	1.2	0	0
25	0	0	2.2	5.6	17	104	57	9.7	1.8	1.2	0	0
26	0	0	2.2	5.9	22	102	66	9.3	1.7	1.1	0	0
27	0	0	2.2	6.4	32	102	67	9.0	1.6	1.0	0	0
28	0	0	2.2	6.9	41	104	69	8.6	1.5	.71	0	0
29	0	0	2.1	7.1	------	126	61	8.2	1.4	.36	0	0
30	0	0	2.1	7.2	------	127	56	7.8	1.3	0	0	0
31	0	------	2.1	7.6	------	115	------	7.4	------	0	0	------
TOTAL	0	0	49.19	118.4	431.6	2,588	1,452	651.0	103.3	31.03	0	0
MEAN	0	0	1.59	3.82	15.4	83.5	48.4	21.0	3.44	1.00	0	0
MAX	0	0	2.3	7.6	41	154	108	58	7.0	1.5	0	0
MIN	0	0	0	1.8	8.1	21	25	7.4	1.3	0	0	0
AC-FT	0	0	98	235	856	5,130	2,880	1,290	205	62	0	0

CAL YEAR 2000	TOTAL*	49.19	MEAN	.53	MAX	2.3	MIN	0	AC-FT	98
WTR YEAR 2001	TOTAL	5,424.52	MEAN	14.9	MAX	154	MIN	0	AC-FT	10,760

* Incomplete Record

Instantaneous peak is 219 CFS @ 10:10 on 03/06/01

RUNOFF - DAILY DISCHARGE

WESTERN HYDROLOGIC SYSTEMS - (916) 885-2480

F356-R LIVE OAK CREEK BELOW LIVE OAK DAM

DAILY DISCHARGE IN CUBIC FEET PER SECOND WATER YEAR OCT 2000 TO SEP 2001

Day	OCT	NOV	DEC	JAN	FEB	MAR	APR	MAY	JUN	JUL	AUG	SEP
1	0	0	0	0	.13	0	0	0	0	.39	0	0
2	0	0	0	0	.13	0	0	0	0	.13	0	0
3	0	0	0	0	.13	0	0	0	0	0	0	0
4	0	0	0	0	.13	0	0	0	0	0	0	0
5	0	0	0	0	.13	0	0	0	0	0	0	0
6	0	0	0	0	.13	0	0	0	0	0	0	0
7	0	.37	0	0	.08	0	0	0	0	0	0	0
8	0	.39	0	0	0	0	0	0	0	0	0	0
9	0	.37	0	0	0	0	0	0	0	0	0	0
10	0	.26	0	.03	0	0	.12	0	0	.29	0	0
11	0	.26	0	.54	0	0	.17	0	0	0	0	0
12	0	.26	0	.35	.58	0	.13	0	0	0	0	0
13	0	.26	0	.26	.71	0	.13	0	0	0	0	0
14	0	.16	0	.26	.39	0	.13	0	0	0	0	0
15	0	.13	0	.26	.35	0	.13	.37	0	0	0	0
16	0	.13	0	.44	.26	0	.06	.13	0	0	0	0
17	0	.04	0	.32	.26	0	0	.13	0	0	0	0
18	0	0	0	.26	.26	0	0	.13	0	0	0	0
19	0	0	0	.26	.26	0	0	.13	0	0	0	0
20	0	0	0	.26	.26	0	.01	.01	0	0	0	0
21	0	0	0	.26	.26	0	.21	0	0	0	0	0
22	0	0	0	.26	.26	0	.13	0	0	0	0	0
23	0	0	0	.26	.26	0	.13	0	0	0	0	0
24	0	0	0	.26	.26	0	.15	0	0	0	0	0
25	0	0	0	.26	.26	0	.13	0	13	0	0	.24
26	0	0	0	.26	.57	0	.13	0	20	0	0	.39
27	0	0	0	.26	.53	0	.13	0	4.2	0	0	.39
28	0	0	0	.26	.55	0	.13	0	.84	0	0	.34
29	0	0	0	.26	------	0	.13	0	.48	0	0	.26
30	0	0	0	.26	------	0	.03	0	.39	0	0	.26
31	0	------	0	.26	------	0	------	0	------	0	0	------
TOTAL	0	2.63	0	6.10	7.14	0	2.18	0.90	38.91	0.81	0	1.88
MEAN	0	.088	0	.20	.26	0	.073	.029	1.30	.026	0	.063
MAX	0	.39	0	.54	.71	0	.21	.37	20	.39	0	.39
MIN	0	0	0	0	0	0	0	0	0	0	0	0
AC-FT	0	5.2	0	12	14	0	4.3	1.8	77	1.6	0	3.7

CAL YEAR 2000	TOTAL*	2.63	MEAN	.029	MAX	.39	MIN	0	AC-FT	5.2		
WTR YEAR 2001	TOTAL	60.55	MEAN	.17	MAX	20	MIN	0	AC-FT	120		

* Incomplete Record
10-09-01
Instantaneous peak is 61 CFS @ 14:55 on 07/10/01

RUNOFF - DAILY DISCHARGE

WESTERN HYDROLOGIC SYSTEMS - (916) 885-2480

F300-R LOS ANGELES RIVER @ TUJUNGA AVE.

DAILY DISCHARGE IN CUBIC FEET PER SECOND WATER YEAR OCT 2000 TO SEP 2001

Day	OCT	NOV	DEC	JAN	FEB	MAR	APR	MAY	JUN	JUL	AUG	SEP
1	94	92	86	77	83	184	101	95	61	54	61	54
2	94	81	87	80	88	139	111	85	62	58	58	55
3	95	94	86	89	90	127	121	81	63	57	55	46
4	92	91	87	86	90	448	112	83	65	55	55	49
5	75	93	85	90	94	2,220	107	87	65	58	53	51
6	97	93	86	90	83	2,430	99	88	61	58	53	54
7	99	93	84	79	90	346	1,010	91	61	60	55	57
8	95	100	86	244	84	229	116	92	56	55	54	52
9	99	98	87	97	89	201	160	81	59	59	54	51
10	100	100	85	2,740	696	238	102	73	62	59	52	48
11	106	93	85	5,370	495	135	102	76	61	60	53	49
12	105	87	91	1,080	3,000	131	100	76	59	58	52	49
13	101	92	94	153	5,070	123	96	71	60	59	52	49
14	90	82	92	107	624	122	103	76	60	55	55	46
15	102	74	89	93	157	121	104	72	58	53	58	49
16	104	89	85	90	128	113	94	66	62	61	54	47
17	96	90	80	88	101	113	102	66	56	58	56	45
18	100	87	82	89	105	111	103	61	58	56	55	49
19	98	81	87	87	359	113	99	64	58	55	54	50
20	98	85	87	93	141	111	305	65	57	57	58	49
21	96	87	83	89	105	115	557	66	56	56	59	48
22	96	79	90	88	99	113	104	62	54	55	56	26
23	97	77	84	88	137	111	101	64	57	59	55	45
24	93	77	86	621	623	104	101	61	54	62	57	44
25	92	83	81	100	2,930	104	97	61	54	60	56	51
26	364	85	76	888	2,200	108	96	61	55	60	57	51
27	1,560	89	83	149	472	105	99	58	56	57	59	50
28	108	86	88	95	528	106	101	54	56	60	53	48
29	709	87	83	94	------	98	98	59	57	60	49	48
30	159	89	82	99	------	102	101	61	55	57	49	50
31	93	------	78	88	------	103	------	63	------	56	52	------
TOTAL	5,407	2,634	2,645	13,321	18,761	8,924	4,702	2,219	1,758	1,787	1,699	1,460
MEAN	174	87.8	85.3	430	670	288	157	71.6	58.6	57.6	54.8	48.7
MAX	1,560	100	94	5,370	5,070	2,430	1,010	95	65	62	61	57
MIN	75	74	76	77	83	98	94	54	54	53	49	26
AC-FT	10,720	5,220	5,250	26,420	37,210	17,700	9,330	4,400	3,490	3,540	3,370	2,900

CAL YEAR 2000	TOTAL*	10,686	MEAN	116	MAX	1,560	MIN	74	AC-FT	21,200
WTR YEAR 2001	TOTAL	65,317	MEAN	179	MAX	5,370	MIN	26	AC-FT	129,600

* Incomplete Record AS OF 10/11/01. A.RIVER

Instantaneous peak is 31,000 CFS @ 00:35 on 01/11/01

–

RUNOFF - DAILY DISCHARGE

WESTERN HYDROLOGIC SYSTEMS - (916) 885-2480

F319B-R LOS ANGELES RIVER BELOW WARDLOW

DAILY DISCHARGE IN CUBIC FEET PER SECOND WATER YEAR OCT 2000 TO SEP 2001

Day	OCT	NOV	DEC	JAN	FEB	MAR	APR	MAY	JUN	JUL	AUG	SEP
1	174	173	178	169	177	269	258	337	211	161	175	121
2	199	171	172	171	166	278	281	328	211	157	178	124
3	208	171	169	177	159	185	297	319	207	157	179	126
4	206	170	171	179	159	186	292	283	216	158	169	122
5	202	166	170	182	162	3,080	272	277	220	150	167	131
6	198	166	167	185	165	4,390	272	279	225	158	160	133
7	205	167	169	171	166	319	3,250	261	218	160	169	132
8	201	163	169	353	164	285	357	256	212	148	170	137
9	200	174	179	289	161	253	278	256	213	146	167	132
10	204	164	174	4,150	903	351	307	242	209	149	165	140
11	215	171	172	12,700	275	208	276	240	212	155	144	136
12	210	159	169	1,940	7,070	157	280	234	197	157	144	137
13	175	152	174	281	12,500	214	276	244	195	154	139	140
14	179	148	171	192	1,780	207	282	243	194	157	127	142
15	176	133	175	183	208	209	288	250	197	161	125	138
16	188	132	167	185	179	213	272	244	188	163	124	143
17	196	157	161	183	172	204	273	227	192	169	117	137
18	176	154	158	191	167	201	289	223	193	171	116	131
19	179	147	159	191	659	198	303	213	186	171	119	134
20	180	142	169	183	521	196	308	227	196	177	123	134
21	188	146	175	176	342	197	2,000	221	198	177	131	142
22	186	174	175	169	327	196	368	214	200	180	133	146
23	184	162	179	170	650	187	385	213	190	178	133	127
24	185	156	175	1,270	1,060	186	355	222	194	184	138	140
25	180	153	174	243	5,810	184	334	221	199	178	142	133
26	290	165	164	1,620	7,160	198	315	229	193	185	139	140
27	3,080	166	167	476	1,190	223	314	229	192	191	138	144
28	408	174	170	198	1,700	227	302	229	185	183	125	149
29	1,480	171	174	193	------	230	324	233	176	174	125	142
30	1,260	171	171	186	------	228	352	224	171	184	127	141
31	299	------	168	182	------	237	------	220	------	172	123	------
TOTAL	11,611	4,818	5,285	27,138	44,152	13,896	13,760	7,638	5,990	5,165	4,431	4,074
MEAN	375	161	170	875	1,577	448	459	246	200	167	143	136
MAX	3,080	174	179	12,700	12,500	4,390	3,250	337	225	191	179	149
MIN	174	132	158	169	159	157	258	213	171	146	116	121
AC-FT	23,030	9,560	10,480	53,830	87,580	27,560	27,290	15,150	11,880	10,240	8,790	8,080

CAL YEAR 2000	TOTAL*	21,714	MEAN	236	MAX	3,080	MIN	132	AC-FT	43,070
WTR YEAR 2001	TOTAL	147,958	MEAN	405	MAX	12,700	MIN	116	AC-FT	293,500

* Incomplete Record
Instantaneous peak is 54,400 CFS @ 03:20 on 01/11/01

RUNOFF - DAILY DISCHARGE

WESTERN HYDROLOGIC SYSTEMS - (916) 885-2480

F57C-R LOS ANGELES RIVER ABOVE ARROYO SECO

DAILY DISCHARGE IN CUBIC FEET PER SECOND WATER YEAR OCT 2000 TO SEP 2001

Day	OCT	NOV	DEC	JAN	FEB	MAR	APR	MAY	JUN	JUL	AUG	SEP
1	190	118	149	153	102	178	117	124	111	143	121	119
2	189	111	143	156	106	144	124	122	113	144	121	116
3	188	125	139	162	110	131	139	118	111	140	117	111
4	184	119	142	167	111	436	135	118	112	137	115	108
5	151	116	140	166	116	2,490	129	125	112	138	115	112
6	167	123	141	171	112	3,090	126	127	111	143	118	113
7	176	125	140	149	122	281	1,620	131	109	135	121	123
8	168	128	144	330	111	183	133	135	108	131	126	124
9	181	129	142	178	115	162	149	129	113	134	126	121
10	187	131	140	2,990	868	261	124	117	115	134	123	122
11	202	128	138	8,010	253	128	119	125	120	137	126	130
12	200	121	143	1,290	4,740	124	117	130	122	130	127	133
13	199	126	152	158	7,070	119	118	124	125	127	121	140
14	192	125	150	119	890	119	125	132	125	124	118	135
15	214	108	149	108	159	120	129	128	130	119	125	147
16	213	125	145	105	136	117	122	125	139	124	124	150
17	208	129	141	102	118	119	125	127	138	116	125	145
18	203	126	144	103	114	115	129	128	144	119	127	153
19	209	121	147	102	425	120	126	126	153	114	129	154
20	216	125	155	104	174	128	223	124	155	118	134	143
21	218	127	152	103	118	131	890	134	153	118	135	141
22	231	128	155	104	116	132	120	129	147	118	136	118
23	241	124	155	104	165	128	118	132	152	119	135	125
24	232	120	155	797	635	124	118	131	150	123	141	124
25	239	128	156	118	3,300	121	120	131	149	122	141	130
26	297	132	148	1,020	3,090	123	120	129	150	121	144	126
27	2,110	137	155	181	503	121	125	123	146	118	142	128
28	145	144	156	108	622	121	125	118	144	120	136	126
29	1,070	144	160	107	------	117	125	121	149	125	131	127
30	288	149	161	108	------	116	130	118	145	119	120	127
31	124	------	156	104	------	119	------	117	------	118	116	------
TOTAL	9,032	3,792	4,593	17,677	24,501	9,918	6,120	3,898	3,951	3,928	3,936	3,871
MEAN	291	126	148	570	875	320	204	126	132	127	127	129
MAX	2,110	149	161	8,010	7,070	3,090	1,620	135	155	144	144	154
MIN	124	108	138	102	102	115	117	117	108	114	115	108
AC-FT	17,910	7,520	9,110	35,060	48,600	19,670	12,140	7,730	7,840	7,790	7,810	7,680

CAL YEAR 2000	TOTAL*	17,417	MEAN	189	MAX	2,110	MIN	108	AC-FT	34,550
WTR YEAR 2001	TOTAL	95,217	MEAN	261	MAX	8,010	MIN	102	AC-FT	188,900

* Incomplete Record

Instantaneous peak is 37,500 CFS @ 1:20 on 01/11/01

RUNOFF - DAILY DISCHARGE

WESTERN HYDROLOGIC SYSTEMS - (916) 885-2480

F34D-R LOS ANGELES RIVER BELOW FIRESTONE

DAILY DISCHARGE IN CUBIC FEET PER SECOND WATER YEAR OCT 2000 TO SEP 2001

Day	OCT	NOV	DEC	JAN	FEB	MAR	APR	MAY	JUN	JUL	AUG	SEP
1	162	147	152	148	147	197	226	217	145	147	127	130
2	170	133	148	146	145	194	233	208	145	145	127	130
3	179	126	144	148	148	160	250	199	145	142	127	130
4	186	128	159	148	149	211	256	186	145	140	127	130
5	179	126	158	148	150	2,810	241	179	145	139	127	127
6	173	128	154	154	188	3,920	221	182	148	136	127	127
7	187	131	148	155	148	256	3,180	184	148	134	127	127
8	186	131	146	239	123	222	636	188	148	132	127	127
9	182	135	145	232	88	277	328	189	148	130	127	127
10	184	136	143	4,050	748	284	309	172	148	130	127	127
11	192	136	138	10,100	198	205	233	162	148	130	127	127
12	173	133	149	1,410	6,240	251	214	162	148	128	127	127
13	155	130	151	293	9,980	195	208	166	148	127	127	127
14	147	131	155	162	1,730	181	209	161	148	127	127	127
15	139	125	157	132	626	174	224	165	148	127	127	127
16	141	121	159	126	212	165	233	160	148	127	129	127
17	144	132	163	110	169	155	227	153	148	127	130	127
18	145	132	168	111	146	153	245	150	148	127	130	127
19	147	131	172	108	530	153	246	147	148	127	130	129
20	148	132	158	107	400	165	236	146	150	127	130	129
21	149	133	158	111	182	177	2,070	145	151	127	130	128
22	150	135	157	132	260	192	445	148	151	127	130	127
23	154	131	162	172	385	195	248	148	151	127	130	129
24	159	130	160	1,120	996	196	216	148	151	127	129	130
25	162	129	159	106	6,680	195	206	148	151	127	129	130
26	286	133	154	1,210	6,510	195	195	148	149	127	130	130
27	2,640	137	154	216	1,110	197	194	147	148	127	130	130
28	355	143	154	164	1,280	193	198	145	148	127	130	127
29	1,410	147	157	137	------	196	206	145	148	127	128	127
30	594	149	158	134	------	191	211	145	148	127	127	129
31	217	------	157	135	------	193	------	145	------	127	130	------
TOTAL	9,595	3,991	4,797	21,864	39,668	12,448	12,344	5,088	4,443	4,046	3,977	3,843
MEAN	310	133	155	705	1,417	402	411	164	148	131	128	128
MAX	2,640	149	172	10,100	9,980	3,920	3,180	217	151	147	130	130
MIN	139	121	138	106	88	153	194	145	145	127	127	127
AC-FT	19,030	7,920	9,510	43,370	78,680	24,690	24,480	10,090	8,810	8,030	7,890	7,620

CAL YEAR 2000	TOTAL*	18,383	MEAN	200	MAX	2,640	MIN	121	AC-FT	36,460
WTR YEAR 2001	TOTAL	126,104	MEAN	345	MAX	10,100	MIN	88	AC-FT	250,100

* Incomplete Record Found logger batteries missing on 7/9/01.
AS OF 05/09/01
Instantaneous peak is 49,600 CFS @ 1:50 on 01/11/01

RUNOFF - DAILY DISCHARGE

WESTERN HYDROLOGIC SYSTEMS - (916) 885-2480

F130-R MALIBU CREEK BELOW COLD CREEK

DAILY DISCHARGE IN CUBIC FEET PER SECOND WATER YEAR OCT 2000 TO SEP 2001

Day	OCT	NOV	DEC	JAN	FEB	MAR	APR	MAY	JUN	JUL	AUG	SEP
1	3.5	10	8.7	15	21	121	57	24	22	5.1	4.8	1.0
2	3.0	9.3	14	13	19	86	50	26	22	5.6	4.7	.91
3	2.7	5.0	14	12	19	68	52	25	24	5.9	5.2	.88
4	2.9	3.9	12	15	17	196	36	24	23	5.3	4.7	.78
5	3.0	3.6	9.3	16	16	1,660	25	23	21	5.3	3.3	1.8
6	3.4	4.0	9.3	16	14	3,950	20	24	20	5.5	3.0	2.9
7	3.3	4.1	10	19	17	529	81	24	19	5.3	2.9	3.2
8	3.1	4.2	11	17	15	286	44	22	18	5.3	2.7	3.5
9	3.2	4.1	14	21	15	221	33	20	17	5.0	2.6	3.7
10	3.2	3.9	14	239	29	151	32	19	16	4.6	2.3	3.8
11	3.2	3.6	13	1,140	59	105	32	32	14	4.7	2.3	3.7
12	3.4	3.4	9.0	327	373	81	30	29	13	4.8	2.3	3.4
13	3.6	3.0	12	112	1,830	63	31	29	13	5.3	2.2	3.3
14	3.1	5.0	15	72	301	52	29	53	13	4.8	2.4	3.2
15	2.8	6.7	11	54	140	49	23	19	12	5.3	2.3	3.1
16	2.6	8.9	10	43	79	44	21	17	12	5.0	2.1	2.7
17	2.5	9.0	13	41	58	28	21	22	11	5.2	2.2	2.6
18	2.5	13	12	35	43	20	22	18	10	5.6	2.2	2.4
19	1.7	15	9.0	37	49	20	25	16	9.6	5.8	2.4	2.2
20	.74	9.3	9.5	32	74	44	30	20	9.7	6.1	2.3	2.0
21	.70	6.4	15	31	41	49	82	20	9.8	6.0	2.1	2.2
22	.62	8.5	17	29	31	52	39	19	9.6	5.6	2.1	2.1
23	.68	13	11	31	31	49	29	20	9.4	5.5	2.0	2.3
24	.81	12	18	56	33	48	22	20	9.3	6.2	1.7	2.4
25	.83	8.9	20	42	297	45	20	21	7.5	6.8	1.5	2.4
26	1.7	13	14	126	1,240	42	21	22	5.2	6.8	1.5	2.4
27	8.9	11	11	76	294	49	21	22	4.8	6.3	1.5	2.4
28	9.7	9.2	12	40	201	44	23	21	4.7	5.6	1.4	2.6
29	15	8.5	15	31	------	53	25	20	4.7	4.8	1.3	2.5
30	18	8.7	15	27	------	51	25	20	4.8	4.6	1.2	2.1
31	10	------	19	22	------	53	------	22	------	4.6	1.1	------
TOTAL	124.38	228.2	396.8	2,787	5,356	8,309	1,001	713	389.1	168.3	76.3	74.47
MEAN	4.01	7.61	12.8	89.9	191	268	33.4	23.0	13.0	5.43	2.46	2.48
MAX	18	15	20	1,140	1,830	3,950	82	53	24	6.8	5.2	3.8
MIN	.62	3.0	8.7	12	14	20	20	16	4.7	4.6	1.1	.78
AC-FT	247	453	787	5,530	10,620	16,480	1,990	1,410	772	334	151	148

CAL YEAR 2000	TOTAL*	749.38	MEAN	8.15	MAX	20	MIN	.62	AC-FT	1,490
WTR YEAR 2001	TOTAL	19,623.55	MEAN	53.8	MAX	3,950	MIN	.62	AC-FT	38,920

* Incomplete Record

Instantaneous peak is 10,900 CFS @ 04:05 on 03/06/01

RUNOFF - DAILY DISCHARGE

WESTERN HYDROLOGIC SYSTEMS - (916) 885-2480

F395-R MESCAL CREEK @ MOUTH OF CANYON

DAILY DISCHARGE IN CUBIC FEET PER SECOND WATER YEAR OCT 2000 TO SEP 2001

Day	OCT	NOV	DEC	JAN	FEB	MAR	APR	MAY	JUN	JUL	AUG	SEP
1	0	0	0	0	0	0	6.7	5.3	0	.04	.01	0
2	0	0	0	0	0	0	6.3	5.5	0	.73	.02	0
3	0	0	0	0	0	0	6.2	5.7	0	1.5	.02	0
4	0	0	0	0	0	0	6.1	5.9	0	1.1	.01	0
5	0	0	0	0	0	0	5.8	6.1	0	1.0	0	0
6	0	0	0	0	0	5.3	5.6	6.4	0	1.2	0	0
7	0	0	0	0	0	6.6	5.5	6.8	0	1.7	0	0
8	0	0	0	0	0	6.6	5.3	7.2	0	1.7	0	0
9	0	0	0	0	0	6.2	4.6	7.5	0	1.4	0	0
10	0	0	0	.18	0	6.0	3.9	7.9	0	1.4	0	0
11	0	0	0	1.2	0	5.2	3.8	8.5	.44	1.0	0	0
12	0	0	0	0	0	4.0	3.8	9.2	.39	0	0	0
13	0	0	0	0	0	3.5	3.6	9.7	.13	0	0	0
14	0	0	0	0	0	3.9	3.6	10	.11	0	0	0
15	0	0	0	0	0	3.9	3.5	11	.20	0	0	0
16	0	0	0	0	0	4.1	3.5	12	.11	0	0	0
17	0	0	0	0	0	4.8	3.7	12	.09	0	0	0
18	0	0	0	0	0	5.3	3.8	13	.34	0	0	0
19	0	0	0	0	0	5.4	3.7	13	.04	0	0	0
20	0	0	0	0	0	6.1	3.6	14	.04	0	0	0
21	0	0	0	0	0	6.7	3.6	8.2	.06	0	0	0
22	0	0	0	0	0	6.1	3.8	0	.06	0	0	0
23	0	0	0	0	0	6.2	4.4	0	.05	0	0	0
24	0	0	0	0	0	6.2	4.3	0	.04	0	0	0
25	0	0	0	0	0	5.9	4.1	0	.03	0	0	0
26	0	0	0	0	0	5.0	4.5	0	.02	0	0	0
27	0	0	0	0	0	4.9	4.6	0	.03	0	0	0
28	0	0	0	0	0	5.1	4.6	0	.04	0	0	0
29	0	0	0	0	------	6.0	4.8	0	.04	0	0	0
30	0	0	0	0	------	6.4	5.0	0	.05	0	0	0
31	0	------	0	0	------	6.9	------	0	------	0	0	------
TOTAL	0	0	0	1.38	0	142.3	136.3	184.9	2.31	12.77	0.06	0
MEAN	0	0	0	.045	0	4.59	4.54	5.96	.077	.41	.002	0
MAX	0	0	0	1.2	0	6.9	6.7	14	.44	1.7	.02	0
MIN	0	0	0	0	0	0	3.5	0	0	0	0	0
AC-FT	0	0	0	2.7	0	282	270	367	4.6	25	.1	0

CAL YEAR 2000	TOTAL*	0.00	MEAN	0	MAX	0	MIN	0	AC-FT	0
WTR YEAR 2001	TOTAL	480.02	MEAN	1.32	MAX	14	MIN	0	AC-FT	952

* Incomplete Record
Instantaneous peak is 15 CFS @ 2:55 on 5/21/01

RUNOFF - DAILY DISCHARGE

WESTERN HYDROLOGIC SYSTEMS - (916) 885-2480

F328-R MINT CANYON CREEK AT FITCH AVE.

DAILY DISCHARGE IN CUBIC FEET PER SECOND WATER YEAR OCT 2000 TO SEP 2001

Day	OCT	NOV	DEC	JAN	FEB	MAR	APR	MAY	JUN	JUL	AUG	SEP
1	0	0	0	0	0	0	0	0	0	0	0	0
2	0	0	0	0	0	0	0	0	0	0	0	0
3	0	0	0	0	0	0	0	0	0	0	0	0
4	0	0	0	0	0	0	0	0	0	0	0	0
5	0	0	0	0	0	0	0	0	0	0	0	0
6	.01	0	0	0	0	.02	0	0	0	0	0	0
7	0	0	0	0	0	0	.02	0	0	0	0	0
8	0	0	0	0	0	0	0	0	0	0	0	0
9	0	0	0	0	0	0	0	0	0	0	0	0
10	0	.05	0	1.1	1.1	0	0	0	0	0	0	0
11	0	0	0	2.5	4.0	0	0	0	0	0	0	0
12	0	0	0	.36	2.3	0	0	0	0	0	0	0
13	0	0	0	0	13	0	0	0	0	0	0	0
14	0	0	0	0	1.6	0	0	0	0	0	0	0
15	0	0	0	0	0	0	0	0	0	0	0	0
16	0	0	0	0	0	0	0	0	0	0	0	0
17	0	0	0	.17	0	0	0	0	0	0	0	0
18	0	0	0	0	0	0	0	0	0	0	.01	0
19	0	0	0	0	0	0	0	0	0	0	0	0
20	0	0	0	0	0	0	.02	0	0	0	0	0
21	0	0	0	0	0	0	.01	0	0	0	0	0
22	0	0	0	.03	0	0	0	0	0	0	0	0
23	0	0	0	.54	0	0	0	0	0	0	0	0
24	0	0	0	1.2	0	0	0	0	0	0	0	0
25	0	0	0	0	0	0	0	0	0	0	0	0
26	.13	0	0	.40	0	0	0	0	0	0	0	0
27	.01	0	0	0	0	0	0	0	0	0	0	0
28	0	0	0	0	0	0	0	0	0	0	0	0
29	.18	0	0	0	------	0	0	0	0	0	0	0
30	0	0	0	0	------	0	0	0	0	0	0	0
31	0	------	0	0	------	0	------	0	------	0	0	------
TOTAL	0.33	0.05	0	6.30	22.0	0.02	0.05	0	0	0	0.01	0
MEAN	.011	.002	0	.20	.79	.001	.002	0	0	0	0	0
MAX	.18	.05	0	2.5	13	.02	.02	0	0	0	.01	0
MIN	0	0	0	0	0	0	0	0	0	0	0	0
AC-FT	.7	.1	0	12	44	.04	.1	0	0	0	.02	0

CAL YEAR 2000	TOTAL*	0.38	MEAN	.004	MAX	.18	MIN	0	AC-FT	.8
WTR YEAR 2001	TOTAL	28.76	MEAN	.079	MAX	13	MIN	0	AC-FT	57

* Incomplete Record 2/6-3/7:pds of doubtful gage hts. 5/1-6/4:pds of doubtful ghts 6/4-8/1pds of doubtfultght8/1-9/5:pds of doubtful ghts. 9/8,9/16:doubtful ghts

Instantaneous peak is 50 CFS @ 03:05 on 02/13/01

RUNOFF - DAILY DISCHARGE

WESTERN HYDROLOGIC SYSTEMS - (916) 885-2480
F181-R MONTEBELLO STORM DRAIN ABOVE RIO HONDO

DAILY DISCHARGE IN CUBIC FEET PER SECOND WATER YEAR OCT 2000 TO SEP 2001

Day	OCT	NOV	DEC	JAN	FEB	MAR	APR	MAY	JUN	JUL	AUG	SEP
1	.09	.17	.06	.06	.06	.69	.23	.12	.07	.07	.12	.06
2	.12	.09	.06	.07	.06	.17	.18	.12	.07	.07	.12	.06
3	.15	.07	.06	.06	.06	.15	.15	.12	.07	.07	.12	.06
4	.16	.06	.06	.06	.06	.15	.15	.11	.07	.07	.12	.06
5	.29	.06	.06	.06	.06	.15	.17	.10	.07	.07	.12	.06
6	.37	.06	.08	.06	.06	12	.15	.09	.07	.07	.12	.06
7	.37	.06	.07	.06	.06	.58	19	.08	.07	.07	.12	.06
8	.37	.06	.06	2.5	.06	.32	.70	.08	.07	.07	.12	.06
9	.37	.06	.06	.27	.06	.32	.15	.07	.07	.07	.12	.06
10	.41	.06	.06	34	4.8	.27	.13	.07	.07	.07	.12	.06
11	2.2	.06	.06	66	.21	.27	.14	.07	.07	.07	.12	.06
12	.67	.06	.06	38	50	.27	.13	.07	.07	.07	.12	.06
13	1.2	.06	.06	.16	63	.26	.12	.08	.07	.07	.12	.06
14	1.3	.06	.06	.07	3.0	.25	.12	.07	.07	.07	.12	.06
15	1.3	.06	.07	.06	.22	.23	.12	.07	.07	.07	.12	.06
16	1.2	.06	.06	.06	.13	.21	.12	.07	.07	.07	.12	.06
17	.81	.06	.06	.06	.12	.19	.12	.07	.07	.09	.12	.06
18	.75	.06	.06	.06	.12	.18	.12	.07	.07	.13	.12	.06
19	.73	.06	.06	.06	9.2	.18	.12	.07	.07	.15	.12	.06
20	.74	.06	.06	.06	1.5	.18	4.8	.07	.07	.13	.12	.06
21	.69	.06	.06	.06	.14	.18	9.2	.07	.07	.12	.12	.06
22	.72	.06	.06	.06	.12	.18	.24	.07	.07	.12	.12	.06
23	.97	.06	.06	.07	4.4	.18	.13	.07	.07	.12	.12	.05
24	1.1	.06	.06	11	7.6	.18	.12	.07	.07	.11	.12	.05
25	1.0	.06	.06	.12	55	.18	.14	.07	.07	.11	.12	.05
26	7.8	.06	.06	11	24	.18	.13	.07	.07	.10	.12	.06
27	7.4	.06	.06	1.6	6.1	.18	.56	.07	.07	.09	.10	.06
28	1.1	.06	.06	.16	8.6	.17	.16	.07	.07	.09	.02	.06
29	17	.06	.06	.07	------	.18	.13	.07	.07	.08	.12	.06
30	1.9	.06	.06	.07	------	.17	.12	.07	.07	.09	.12	.06
31	.85	------	.06	.07	------	.15	------	.07	------	.09	.12	------
TOTAL	54.13	1.95	1.90	166.07	238.80	18.95	37.85	2.44	2.10	2.74	3.60	1.77
MEAN	1.75	.065	.061	5.36	8.53	.61	1.26	.079	.070	.088	.12	.059
MAX	17	.17	.08	66	63	12	19	.12	.07	.15	.12	.06
MIN	.09	.06	.06	.06	.06	.15	.12	.07	.07	.07	.02	.05
AC-FT	107	3.9	3.8	329	474	38	75	4.8	4.2	5.4	7.1	3.5

CAL YEAR 2000	TOTAL*	57.98	MEAN	.63	MAX	17	MIN	.06	AC-FT	115		
WTR YEAR 2001	TOTAL	532.30	MEAN	1.46	MAX	66	MIN	.02	AC-FT	1,060		

* Incomplete Record
Instantaneous peak is 641 CFS @ 05:00 on 01/12/01

RUNOFF - DAILY DISCHARGE

WESTERN HYDROLOGIC SYSTEMS - (916) 885-2480

F118B-R PACIOMA DAM OUTFLOW

DAILY DISCHARGE IN CUBIC FEET PER SECOND WATER YEAR OCT 2000 TO SEP 2001

Day	OCT	NOV	DEC	JAN	FEB	MAR	APR	MAY	JUN	JUL	AUG	SEP
1	0	0	0	0	0	31	19	0	0	0	0	0
2	0	0	0	0	0	48	7.4	0	0	0	0	0
3	0	0	0	0	0	47	1.2	0	0	0	0	0
4	0	0	0	0	0	47	.79	.53	0	0	0	0
5	0	0	0	0	0	31	.60	0	2.3	0	0	0
6	0	0	0	0	0	0	.60	0	0	0	0	0
7	0	0	0	0	0	34	.60	0	0	0	0	0
8	0	0	0	0	0	53	.60	0	0	0	0	0
9	0	0	0	30	0	53	.60	0	0	0	0	0
10	0	30	0	17	0	52	.60	0	0	0	0	0
11	0	45	0	.99	0	52	.60	0	0	0	0	0
12	0	44	0	21	0	52	.60	0	0	0	0	0
13	0	15	0	13	0	52	.60	0	0	0	0	0
14	0	0	0	.03	0	51	.60	0	0	0	0	0
15	0	0	0	0	0	45	.60	0	0	0	0	0
16	0	0	0	0	0	37	.60	0	0	0	0	0
17	0	0	0	.01	0	36	.60	0	0	0	0	0
18	0	0	0	.45	0	36	.60	0	0	0	0	0
19	0	0	0	.02	0	13	.60	0	0	0	0	0
20	0	0	0	0	34	0	.60	0	0	0	0	0
21	0	0	0	0	52	0	.60	0	.05	0	0	0
22	0	0	0	0	51	0	.60	0	.91	0	0	0
23	0	0	0	0	54	0	.60	0	.17	0	0	0
24	0	0	0	0	33	0	.50	0	0	0	0	0
25	0	0	0	0	0	0	0	0	0	0	0	0
26	0	0	0	0	0	12	0	0	0	0	0	0
27	0	0	0	0	0	20	0	0	0	0	0	0
28	0	0	0	0	0	21	0	0	0	0	0	0
29	0	0	0	0	------	20	0	0	0	0	0	0
30	0	0	0	0	------	19	0	0	0	0	0	0
31	0	------	0	0	------	19	------	0	------	0	0	------
TOTAL	0	134	0	82.50	224	881	40.29	0.53	3.43	0	0	0
MEAN	0	4.47	0	2.66	8.00	28.4	1.34	.017	.11	0	0	0
MAX	0	45	0	30	54	53	19	.53	2.3	0	0	0
MIN	0	0	0	0	0	0	0	0	0	0	0	0
AC-FT	0	266	0	164	444	1,750	80	1.1	6.8	0	0	0

CAL YEAR 2000	TOTAL*	134.00	MEAN	1.46	MAX	45	MIN	0	AC-FT	266
WTR YEAR 2001	TOTAL	1,365.75	MEAN	3.74	MAX	54	MIN	0	AC-FT	2,710

* Incomplete Record

As of 10-16-01

Instantaneous peak is 188 CFS @ 8:00 on 06/05/01

RUNOFF - DAILY DISCHARGE

WESTERN HYDROLOGIC SYSTEMS - (916) 885-2480

F305-R PACOIMA DIVERSION @ BRANFORD

DAILY DISCHARGE IN CUBIC FEET PER SECOND WATER YEAR OCT 2000 TO SEP 2001

Day	OCT	NOV	DEC	JAN	FEB	MAR	APR	MAY	JUN	JUL	AUG	SEP
1	3.5	2.4	2.5	2.7	2.6	3.4	4.6	2.6	2.0	1.5	1.7	1.7
2	3.2	4.4	2.2	2.5	2.9	3.2	4.5	2.3	2.3	1.5	1.5	1.7
3	2.8	4.4	2.2	2.6	2.9	3.2	4.3	1.8	2.0	2.0	1.5	1.7
4	3.5	2.6	2.2	2.5	2.9	13	4.5	2.0	2.0	2.0	1.6	1.9
5	3.6	3.2	2.3	2.8	3.0	68	4.0	2.1	1.9	2.1	1.3	1.9
6	2.9	3.0	3.5	2.9	2.6	82	3.9	2.0	1.8	1.9	1.3	1.7
7	3.0	3.0	2.3	2.7	2.5	3.1	58	2.0	1.8	1.7	1.4	1.6
8	2.7	2.7	2.6	11	2.4	3.0	4.2	2.0	2.0	1.5	1.4	1.7
9	2.8	3.1	2.8	3.3	2.5	24	6.3	2.1	1.8	1.5	1.5	1.6
10	3.1	2.8	2.9	59	38	24	4.0	2.3	1.8	1.5	1.6	1.8
11	2.8	3.2	2.6	238	23	3.5	4.0	2.1	1.7	1.5	1.6	1.7
12	2.7	2.8	2.5	22	150	3.3	4.0	2.7	1.7	1.5	1.6	1.5
13	2.5	3.3	2.5	2.4	305	3.0	3.9	2.2	1.7	1.5	1.5	1.4
14	2.6	2.8	2.7	2.5	22	2.9	3.9	2.1	1.6	1.6	1.5	1.7
15	2.7	2.9	2.7	2.6	3.8	2.9	4.0	2.3	1.5	1.8	1.5	1.4
16	2.8	2.7	2.7	2.6	3.3	2.9	3.9	2.2	1.5	2.2	1.5	1.4
17	3.2	2.4	2.6	1.9	3.2	2.9	3.9	2.0	1.5	2.2	1.4	1.4
18	4.6	2.6	2.3	2.1	4.2	2.8	3.9	2.2	1.6	2.4	1.5	1.7
19	3.7	3.0	2.3	2.3	9.1	4.0	4.2	2.3	1.6	1.7	1.5	1.4
20	2.9	3.2	2.6	2.3	3.4	3.9	60	2.1	1.6	1.5	1.5	1.5
21	2.8	3.1	2.7	2.4	3.2	4.0	18	2.0	1.5	1.5	1.6	1.4
22	3.2	2.4	2.7	2.4	3.1	4.0	4.0	1.9	1.6	1.8	1.7	1.6
23	2.6	2.4	2.8	2.4	3.0	4.0	3.8	1.9	1.6	1.6	1.6	1.5
24	2.8	2.5	2.7	62	9.8	4.0	3.8	1.9	1.6	1.5	1.6	1.4
25	2.9	2.5	2.0	2.9	76	4.0	4.0	1.9	1.6	1.5	1.6	1.6
26	41	2.6	2.1	30	66	4.3	4.4	1.8	1.5	1.5	1.5	1.5
27	81	2.7	2.3	3.1	24	4.1	4.5	2.1	1.6	1.7	1.5	1.4
28	2.8	2.6	2.5	2.9	12	4.2	4.5	1.9	1.6	1.5	1.8	1.6
29	69	2.7	2.6	2.9	------	4.3	5.0	1.9	1.6	2.3	2.2	1.4
30	4.8	2.8	2.5	2.8	------	4.5	5.0	1.8	1.6	1.6	2.0	1.4
31	2.4	------	2.5	2.6	------	4.5	------	1.9	------	1.7	1.7	------
TOTAL	276.9	86.8	78.4	487.1	786.4	304.9	251.0	64.4	51.2	53.3	48.7	47.2
MEAN	8.93	2.89	2.53	15.7	28.1	9.84	8.37	2.08	1.71	1.72	1.57	1.57
MAX	81	4.4	3.5	238	305	82	60	2.7	2.3	2.4	2.2	1.9
MIN	2.4	2.4	2.0	1.9	2.4	2.8	3.8	1.8	1.5	1.5	1.3	1.4
AC-FT	549	172	156	966	1,560	605	498	128	102	106	97	94

CAL YEAR 2000	TOTAL*	442.1	MEAN	4.81	MAX	81	MIN	2.0	AC-FT	877
WTR YEAR 2001	TOTAL	2,536.3	MEAN	6.95	MAX	305	MIN	1.3	AC-FT	5,030

* Incomplete Record

Instantaneous peak is 6130 CFS @ 00:15 on 01/11/01

RUNOFF - DAILY DISCHARGE

WESTERN HYDROLOGIC SYSTEMS - (916) 885-2480

F122-R PALLETT CREEK @ VALYERMO HWY.

DAILY DISCHARGE IN CUBIC FEET PER SECOND WATER YEAR OCT 2000 TO SEP 2001

Day	OCT	NOV	DEC	JAN	FEB	MAR	APR	MAY	JUN	JUL	AUG	SEP
1	.01	.10	.11	.10	.28	.20	1.2	.29	.39	2.5	1.7	1.2
2	.12	.10	.08	.29	.20	.15	.77	.28	.46	2.3	1.5	1.2
3	.13	.16	.10	.10	.20	.11	.34	.27	.51	2.6	1.4	1.3
4	.13	.15	.09	.10	.21	.12	.30	.26	.51	2.7	1.4	1.3
5	.09	.08	.10	.05	.23	.16	.37	.25	.41	2.9	1.4	1.2
6	.06	.10	.10	0	.22	.32	.40	.25	.44	3.7	1.5	1.2
7	.04	.10	.10	0	.20	.32	.40	.23	.36	3.8	1.5	1.2
8	.01	.08	.10	.05	.20	.30	.40	.21	.39	3.0	1.5	1.2
9	.01	.03	.10	.10	.16	.32	.40	.20	.56	2.6	1.5	1.2
10	0	.10	.10	.20	.15	.47	.41	.19	.79	2.7	1.9	1.2
11	0	.05	.10	.46	.20	.50	.51	.16	.84	3.2	1.8	1.6
12	0	0	.10	.10	.21	.51	.50	.19	.86	1.8	1.7	1.4
13	0	0	.10	.10	.75	.58	.50	.18	.99	1.2	1.7	1.5
14	0	.10	.10	.10	.29	.59	.50	.16	1.3	.94	1.6	1.4
15	0	.10	.10	.18	.17	.60	.50	.16	1.8	1.1	1.5	1.4
16	0	.05	.10	.19	.18	.60	.52	.17	2.0	1.1	1.6	1.4
17	.01	.05	.10	.20	.18	.64	.62	.14	2.5	1.2	1.4	1.4
18	.05	.10	.10	.20	.10	.66	.71	.15	2.5	1.2	1.3	1.3
19	.05	.10	.10	.20	.15	.75	.78	.15	2.6	1.3	1.1	1.2
20	.04	.10	.10	.20	.15	.80	.80	.17	2.9	1.3	1.1	1.3
21	0	.05	.10	.24	.10	.80	.84	.15	2.9	1.5	1.1	1.5
22	0	.08	.10	.13	.14	.82	.79	.15	3.0	1.7	1.1	1.5
23	0	.10	.10	0	.13	.90	.88	.16	2.6	1.6	1.1	1.3
24	.03	.10	.10	.08	.14	.90	.88	.17	2.6	1.5	1.2	1.4
25	.08	.10	.10	.01	.21	.90	.48	.17	2.9	1.6	1.1	1.5
26	.10	.12	.10	.07	.13	.91	.21	.19	3.2	1.5	1.1	1.4
27	.15	.09	.10	.13	.44	.91	.23	.23	3.1	2.5	1.3	1.3
28	.08	.10	.10	.20	.33	1.0	.23	.28	3.0	2.6	1.2	1.1
29	.10	.10	.10	.20	------	1.3	.25	.33	2.9	2.5	1.2	1.2
30	.10	.10	.10	.20	------	1.1	.28	.37	2.5	2.5	1.2	1.2
31	.10	------	.10	.21	------	1.2	------	.33	------	2.2	1.2	------
TOTAL	1.49	2.59	3.08	4.39	6.05	19.44	16.00	6.59	51.81	64.84	42.9	39.5
MEAN	.048	.086	.099	.14	.22	.63	.53	.21	1.73	2.09	1.38	1.32
MAX	.15	.16	.11	.46	.75	1.3	1.2	.37	3.2	3.8	1.9	1.6
MIN	0	0	.08	0	.10	.11	.21	.14	.36	.94	1.1	1.1
AC-FT	3.0	5.1	6.1	8.7	12	39	32	13	103	129	85	78

CAL YEAR 2000	TOTAL*	7.16	MEAN	.078	MAX	.16	MIN	0	AC-FT	14
WTR YEAR 2001	TOTAL	258.68	MEAN	.71	MAX	3.8	MIN	0	AC-FT	513

* Incomplete Record 12/5:small dam removed below sta. 12/5-1/2:Ght doubtful
Instantaneous peak is 45 CFS @ 12:00 on 01/02/01

RUNOFF - DAILY DISCHARGE

WESTERN HYDROLOGIC SYSTEMS - (916) 885-2480

F192B-R RIO HONDO BELOW LOWER AZUSA ROAD

DAILY DISCHARGE IN CUBIC FEET PER SECOND WATER YEAR OCT 2000 TO SEP 2001

Day	OCT	NOV	DEC	JAN	FEB	MAR	APR	MAY	JUN	JUL	AUG	SEP
1	.27	.02	.03	0	0	.03	0	0	0	0	0	0
2	.42	0	0	0	0	.02	0	.05	0	0	0	0
3	.39	0	0	0	0	0	0	.02	0	0	0	0
4	.14	0	0	0	0	0	0	.01	0	0	0	0
5	.09	0	0	0	0	.02	0	0	0	.05	0	0
6	.10	0	.07	0	.01	4.3	0	0	0	0	0	0
7	0	0	0	0	.24	.04	14	0	0	0	0	0
8	0	0	0	.38	0	0	.23	0	0	0	0	0
9	.04	0	0	.11	0	.44	.10	0	0	0	0	0
10	0	0	0	13	2.3	1.5	.04	0	0	0	0	0
11	.45	0	0	37	.53	0	.12	0	0	0	0	0
12	.10	0	0	.80	27	0	0	0	0	0	0	0
13	.06	0	0	0	26	0	.05	0	0	0	0	0
14	0	0	0	0	.67	0	0	0	0	0	0	0
15	.01	0	0	.76	.01	0	.01	0	0	0	0	0
16	.07	0	0	0	0	0	0	0	0	0	0	0
17	0	0	0	0	0	.09	0	0	0	0	0	0
18	0	0	0	0	0	0	0	0	0	0	0	0
19	0	.01	0	0	.69	.03	0	0	0	0	0	0
20	0	0	0	0	.14	.01	6.3	0	0	0	0	0
21	0	0	0	0	0	0	3.0	0	0	0	0	0
22	0	0	0	0	0	0	.03	0	0	0	0	0
23	.02	.02	0	0	.92	0	0	0	0	0	0	0
24	0	0	0	4.3	3.7	0	0	0	0	0	0	.05
25	0	0	0	.01	17	0	.01	0	0	0	0	0
26	2.1	0	0	1.9	6.7	0	0	0	0	0	0	0
27	6.0	0	0	.08	3.2	0	.09	0	0	0	0	0
28	.10	.01	0	0	2.5	0	.01	0	0	0	0	0
29	5.8	.01	0	.01	------	0	.02	0	0	0	0	0
30	.32	0	0	0	------	0	0	0	0	0	0	0
31	.01	------	0	0	------	0	------	0	------	0	0	------
TOTAL	16.49	0.07	0.10	58.35	91.61	6.48	24.01	0.08	0	0.05	0	0.05
MEAN	.53	.002	.003	1.88	3.27	.21	.80	.003	0	.002	0	.002
MAX	6.0	.02	.07	37	27	4.3	14	.05	0	.05	0	.05
MIN	0	0	0	0	0	0	0	0	0	0	0	0
AC-FT	33	.1	.2	116	182	13	48	.2	0	.1	0	.1

CAL YEAR 2000	TOTAL*	16.66	MEAN	.18	MAX	6.0	MIN	0	AC-FT	33
WTR YEAR 2001	TOTAL	197.29	MEAN	.54	MAX	37	MIN	0	AC-FT	391

* Incomplete Record

Instantaneous peak is 318 CFS @ 02:30 on 01/11/01

RUNOFF - DAILY DISCHARGE

WESTERN HYDROLOGIC SYSTEMS - (916) 885-2480

F45B-R RIO HONDO ABOVE STEWART AND GRAY

DAILY DISCHARGE IN CUBIC FEET PER SECOND WATER YEAR OCT 2000 TO SEP 2001

Day	OCT	NOV	DEC	JAN	FEB	MAR	APR	MAY	JUN	JUL	AUG	SEP

Under Construction Since 6/2000

RUNOFF - DAILY DISCHARGE

WESTERN HYDROLOGIC SYSTEMS - (916) 885-2480

F313B-R RIO HONDO BYPASS-ZONE 1 DITCH

DAILY DISCHARGE IN CUBIC FEET PER SECOND WATER YEAR OCT 2000 TO SEP 2001

Day	OCT	NOV	DEC	JAN	FEB	MAR	APR	MAY	JUN	JUL	AUG	SEP
1	42	0	151	29	33	35	.20	0	0	0	0	0
2	39	0	149	34	32	33	.18	0	0	0	0	0
3	32	0	134	32	34	34	57	0	0	0	0	0
4	39	0	135	51	37	35	150	0	0	0	0	0
5	39	0	144	52	38	27	153	0	0	0	0	0
6	38	0	142	58	32	60	157	0	0	0	0	0
7	43	0	138	56	35	85	66	0	0	0	0	0
8	41	0	134	29	11	97	.27	0	0	0	0	0
9	39	0	131	7.9	0	60	48	0	0	0	0	0
10	40	0	128	.70	0	18	141	0	0	0	0	0
11	34	0	126	4.9	0	17	159	0	0	0	0	0
12	35	0	132	0	1.9	16	157	0	0	0	0	0
13	33	0	135	0	3.2	16	140	0	0	0	0	0
14	38	0	134	0	0	16	57	0	0	0	0	0
15	42	0	130	0	0	16	.40	0	0	0	.18	0
16	23	74	131	0	0	16	.30	0	0	0	0	0
17	.45	142	132	25	0	16	.20	0	0	0	0	0
18	.07	145	121	13	0	16	.20	0	0	0	0	0
19	0	145	28	0	0	17	.16	0	0	0	0	0
20	0	141	.07	0	66	17	.08	0	0	0	0	0
21	0	140	0	0	121	13	.07	0	0	0	0	0
22	0	140	0	25	88	3.8	0	0	0	0	0	0
23	0	145	0	45	71	3.6	0	0	0	0	0	0
24	0	137	0	12	32	3.5	0	0	0	0	0	0
25	0	138	0	24	16	3.5	0	0	0	0	0	0
26	0	139	14	25	11	3.2	0	0	0	0	0	0
27	.21	136	34	15	.47	3.0	0	0	0	0	0	0
28	0	135	37	26	33	1.6	0	0	0	0	0	0
29	.05	149	34	38	------	0	0	0	0	0	0	0
30	0	153	31	39	------	0	0	0	0	0	0	0
31	0	------	31	36	------	0	------	0	------	0	0	------
TOTAL	597.78	2,059	2,636.07	677.50	695.57	682.2	1,287.06	0	0	0	0.18	0
MEAN	19.3	68.6	85.0	21.9	24.8	22.0	42.9	0	0	0	.006	0
MAX	43	153	151	58	121	97	159	0	0	0	.18	0
MIN	0	0	0	0	0	0	0	0	0	0	0	0
AC-FT	1,190	4,080	5,230	1,340	1,380	1,350	2,550	0	0	0	.4	0

CAL YEAR 2000	TOTAL*	5,292.85	MEAN	57.5	MAX	153	MIN	0	AC-FT	10,500
WTR YEAR 2001	TOTAL	8,635.36	MEAN	23.7	MAX	159	MIN	0	AC-FT	17,130

* Incomplete Record

Instantaneous peak is 178 CFS @ 06:40 on 04/07/01

RUNOFF - DAILY DISCHARGE

WESTERN HYDROLOGIC SYSTEMS - (916) 885-2480

F338-R RUBIO DIVERSION CHANNEL

DAILY DISCHARGE IN CUBIC FEET PER SECOND WATER YEAR OCT 2000 TO SEP 2001

Day	OCT	NOV	DEC	JAN	FEB	MAR	APR	MAY	JUN	JUL	AUG	SEP
1	.22	.30	.49	1.8	1.5	2.0	.54	.21	.20	.20	0	0
2	.36	.69	.60	1.8	1.6	1.0	1.3	.23	.20	.20	0	0
3	.21	.68	.60	1.8	1.7	.81	.71	.21	.20	.20	0	0
4	.35	.40	.82	1.9	1.8	3.0	.64	.21	.20	.20	0	.13
5	.31	.39	.77	1.9	2.4	2.6	.92	.29	.20	.72	0	.20
6	.28	.38	.83	2.0	2.2	16	.60	.23	.20	.60	0	.20
7	.41	.30	.81	2.4	3.0	3.1	16	.79	.20	.60	0	.20
8	.30	.22	1.0	3.1	1.6	2.3	1.2	.35	.21	.40	0	.20
9	.35	.28	1.0	2.3	1.7	4.9	2.2	.27	.20	.40	0	.20
10	.45	.40	1.0	23	3.4	2.4	1.0	.24	.20	.40	0	.20
11	.20	.39	1.0	28	2.6	1.8	.20	.20	.25	.40	0	.20
12	.30	.36	1.3	2.1	21	1.7	.20	.17	.25	.40	0	.20
13	.20	.39	1.2	1.4	37	1.7	.14	0	.20	.40	0	.20
14	.20	.36	.93	1.2	3.0	1.4	0	.10	.20	.40	0	.20
15	.27	.32	1.0	1.2	1.9	.44	0	.04	.20	.40	0	.20
16	.30	.40	1.0	1.2	1.5	.40	0	.14	.20	.40	0	.20
17	.38	.40	1.1	1.6	1.0	.40	.02	.24	.22	.40	0	.20
18	.40	.36	1.2	1.7	1.1	.40	.09	.20	.20	.19	0	.20
19	.40	.40	1.2	1.6	1.9	.19	.10	.23	.20	0	0	.20
20	.40	.40	1.2	1.2	.66	.08	6.4	.22	.20	0	0	.22
21	.40	.40	1.2	1.2	.60	0	3.0	.22	.20	0	0	.20
22	.40	.40	1.2	1.4	.60	0	.82	.31	.20	0	0	.20
23	.40	.40	1.3	1.2	1.1	0	.20	.29	.24	0	0	.20
24	.40	.40	1.4	5.0	4.3	0	.20	.26	.20	0	0	.20
25	.51	.40	1.4	1.2	14	.54	.20	.20	.22	0	0	.20
26	1.3	.40	1.5	3.1	5.1	1.5	.20	.22	.20	0	0	.20
27	1.3	.40	1.4	1.2	7.2	1.3	.24	.53	.20	0	0	.20
28	.41	.40	1.4	1.4	4.6	1.5	.96	.20	.20	0	.14	.20
29	2.2	.40	1.5	1.4	------	1.7	1.1	.20	.20	0	.12	.20
30	.34	.40	1.6	1.4	------	1.1	.72	.20	.20	0	.04	.20
31	.27	------	1.8	1.5	------	.18	------	.20	------	0	.08	------
TOTAL	14.22	11.82	34.75	103.2	130.06	54.44	39.90	7.40	6.19	6.91	0.38	5.35
MEAN	.46	.39	1.12	3.33	4.65	1.76	1.33	.24	.21	.22	.012	.18
MAX	2.2	.69	1.8	28	37	16	16	.79	.25	.72	.14	.22
MIN	.20	.22	.49	1.2	.60	0	0	0	.20	0	0	0
AC-FT	28	23	69	205	258	108	79	15	12	14	.8	11

CAL YEAR 2000	TOTAL*	60.79	MEAN	.66	MAX	2.2	MIN	.20	AC-FT	121		
WTR YEAR 2001	TOTAL	414.62	MEAN	1.14	MAX	37	MIN	0	AC-FT	822		

* Incomplete Record
Instantaneous peak is 179 CFS @ 08:15 on 01/11/01

RUNOFF - DAILY DISCHARGE

WESTERN HYDROLOGIC SYSTEMS - (916) 885-2480

F82C-R RUBIO WASH @ GLENDON WAY

DAILY DISCHARGE IN CUBIC FEET PER SECOND WATER YEAR OCT 2000 TO SEP 2001

Day	OCT	NOV	DEC	JAN	FEB	MAR	APR	MAY	JUN	JUL	AUG	SEP
1	1.1	.83	.98	1.2	.61	3.5	12	1.4	.69	.88	.86	.89
2	1.1	.83	.89	1.2	.74	5.8	7.5	1.1	.76	.94	.93	.84
3	1.5	.83	.96	1.2	.58	6.8	1.2	2.3	.83	1.1	.75	.94
4	1.2	.91	3.2	.93	.63	21	.92	2.9	1.2	1.1	.78	.93
5	1.0	1.1	1.7	1.0	.77	11	1.0	3.0	1.0	2.9	.76	.94
6	1.0	1.1	.81	.90	.83	52	.85	3.8	1.0	1.0	.78	.83
7	1.1	.94	.84	.84	15	3.4	106	2.0	1.2	.78	.77	.80
8	1.0	.93	.97	2.3	.78	3.5	4.9	4.9	1.1	.83	.75	.82
9	1.1	1.1	.87	1.1	.77	20	6.6	6.9	.91	.75	.76	.85
10	1.3	1.1	.84	159	16	2.5	2.4	6.4	.70	.97	.81	.98
11	2.9	1.0	.96	249	5.9	.55	.97	6.6	.93	.96	.82	.86
12	1.0	.95	.91	12	215	.92	.73	6.6	.96	.96	.86	.91
13	.99	.82	.80	.87	221	.75	.80	6.5	.66	.81	.88	.84
14	1.0	1.2	.85	.85	2.5	2.3	.68	3.6	.64	.87	.79	.92
15	.98	3.9	.76	3.6	.82	2.0	.77	1.1	.96	.92	.92	.71
16	1.1	3.4	.76	.80	2.2	.58	1.3	1.5	.70	.92	.86	.75
17	1.1	.85	.75	.64	4.1	.59	.77	1.1	.62	1.0	.95	.86
18	1.2	.86	.81	.73	4.7	.60	1.2	.97	.73	.99	.85	.86
19	1.3	.85	.90	.83	13	.63	1.4	.81	.62	.96	.94	.88
20	1.2	1.9	1.0	.68	3.9	.62	37	.95	.67	.85	1.0	.92
21	1.1	1.0	1.1	.68	1.8	1.6	23	.99	.87	1.0	.97	.82
22	1.0	1.1	1.0	.80	1.7	1.7	1.0	.76	.84	.98	.99	.89
23	.99	.97	.99	.95	5.8	.82	1.3	1.0	.81	.69	.88	.66
24	1.2	.98	1.1	29	26	.68	1.4	.77	.74	.92	.94	.82
25	1.1	.97	1.1	.72	160	3.9	1.3	.92	1.1	.95	.83	1.2
26	22	.96	1.1	19	43	2.7	2.6	.85	1.0	.92	.79	.68
27	16	2.7	.93	.97	28	3.5	3.1	.94	.90	.94	.88	.98
28	1.0	1.0	1.0	.76	17	4.8	1.5	.86	1.1	.82	.94	1.8
29	47	1.1	1.0	.83	------	7.6	2.9	1.2	1.0	.77	1.1	.98
30	1.5	1.2	1.2	.81	------	9.8	4.0	.63	.89	.75	1.0	.98
31	.95	------	1.2	.82	------	12	------	.68	------	.79	.91	------
TOTAL	118.01	37.38	32.28	495.01	793.13	188.14	231.09	74.03	26.13	30.02	27.05	27.14
MEAN	3.81	1.25	1.04	16.0	28.3	6.07	7.70	2.39	.87	.97	.87	.90
MAX	47	3.9	3.2	249	221	52	106	6.9	1.2	2.9	1.1	1.8
MIN	.95	.82	.75	.64	.58	.55	.68	.63	.62	.69	.75	.66
AC-FT	234	74	64	982	1,570	373	458	147	52	60	54	54

CAL YEAR 2000	TOTAL*	187.67	MEAN	2.04	MAX	47	MIN	.75	AC-FT	372
WTR YEAR 2001	TOTAL	2,079.41	MEAN	5.70	MAX	249	MIN	.55	AC-FT	4,120

* Incomplete Record
Instantaneous peak is 1670 CFS @ 1:20 on 01/11/01

RUNOFF - DAILY DISCHARGE

WESTERN HYDROLOGIC SYSTEMS - (916) 885-2480

F303-R SAN DIMAS CREEK BELOW DAM

DAILY DISCHARGE IN CUBIC FEET PER SECOND WATER YEAR OCT 2000 TO SEP 2001

Day	OCT	NOV	DEC	JAN	FEB	MAR	APR	MAY	JUN	JUL	AUG	SEP
1	.34	.20	.24	.24	.32	10	.96	.81	37	.53	.40	.04
2	.34	.20	.24	.24	.32	21	.96	.81	35	.53	.40	.04
3	.32	.20	.24	.24	.32	18	.96	.81	34	.53	.40	.04
4	.32	.20	.24	.24	.32	17	.96	.82	40	.53	.40	.04
5	.33	.20	.24	.24	.32	17	.93	.77	41	.53	.40	.04
6	.32	.20	.24	.24	.32	13	.96	.79	37	.53	.40	.08
7	.32	.20	.24	.24	.32	12	.99	.80	34	.53	.40	.08
8	.32	.41	.24	.24	.32	12	.67	.91	9.0	.46	.40	.08
9	.35	.25	.24	.24	.32	12	15	.44	1.4	.45	.40	.08
10	.36	.24	.24	.24	.32	11	20	.40	1.2	.41	.40	.08
11	.34	.24	.24	.24	.32	12	19	.37	1.2	.40	.40	.08
12	.32	.20	.24	.24	.32	4.3	18	.36	1.3	.40	.40	.08
13	.32	.20	.24	.24	.32	.46	17	.36	1.4	.40	.40	.08
14	.32	.20	.24	.24	.32	.40	17	.36	1.2	.40	.40	.08
15	.32	.20	.24	.24	.32	.40	5.3	5.4	.97	.40	.29	.08
16	.32	.16	.24	.24	.32	.36	.40	.40	.89	.40	.20	.12
17	.32	.16	.24	.24	.32	.36	.38	4.0	.81	.40	.20	.12
18	.32	.16	.24	.24	.32	.36	.36	5.6	.72	.40	.20	.12
19	.32	.16	.24	.24	.32	.36	.36	5.2	.68	.40	.20	.12
20	.32	.16	.24	.24	.32	.36	.37	5.1	.65	.40	.20	.12
21	.32	.16	.24	.24	.32	.36	.58	5.1	.54	.40	.20	.12
22	.32	.16	.24	.24	.32	.36	.40	5.1	.53	.40	.20	.12
23	.32	.16	.24	.24	.32	.36	.37	5.1	.53	.40	.20	.12
24	.32	.16	.24	.24	.32	.36	.36	5.1	.53	.40	.20	.21
25	.32	.16	.24	.24	.32	.36	.36	5.1	.53	.40	.20	.12
26	.32	.16	.24	.24	.32	.89	.36	5.2	.53	.40	.20	.16
27	.32	.16	.24	.24	.32	.96	.36	5.4	.53	.40	.20	.16
28	.32	.16	.24	.24	.32	.96	.41	5.1	.53	.40	.20	.16
29	.32	.16	.24	.24	------	.96	.81	19	.53	.40	.20	.16
30	.32	.16	.24	.24	------	.96	.81	27	.53	.40	.20	.16
31	.32	------	.24	.24	------	.96	------	25	------	.40	.20	------
TOTAL	10.06	5.74	7.44	7.44	8.96	169.85	125.38	146.71	284.73	13.43	9.09	3.09
MEAN	.32	.19	.24	.24	.32	5.48	4.18	4.73	9.49	.43	.29	.10
MAX	.36	.41	.24	.24	.32	21	20	27	41	.53	.40	.21
MIN	.32	.16	.24	.24	.32	.36	.36	.36	.53	.40	.20	.04
AC-FT	20	11	15	15	18	337	249	291	565	27	18	6.1

CAL YEAR 2000	TOTAL*	23.24	MEAN	.25	MAX	.41	MIN	.16	AC-FT	46		
WTR YEAR 2001	TOTAL	791.92	MEAN	2.17	MAX	41	MIN	.04	AC-FT	1,570		

* Incomplete Record
10-09-01 A.R.
Instantaneous peak is 293 CFS @ 09:20 on 05/15/01

RUNOFF - DAILY DISCHARGE

WESTERN HYDROLOGIC SYSTEMS - (916) 885-2480
F218-R SAN DIMAS WASH BELOW PUDDINGSTONE DIVERSION

DAILY DISCHARGE IN CUBIC FEET PER SECOND WATER YEAR OCT 2000 TO SEP 2001

Day	OCT	NOV	DEC	JAN	FEB	MAR	APR	MAY	JUN	JUL	AUG	SEP
1	0	0	0	0	0	0	0	0	27	0	0	0
2	0	0	0	0	0	5.4	0	0	26	0	0	0
3	0	0	0	0	0	12	0	0	25	0	0	0
4	0	0	0	0	0	12	0	0	18	0	0	0
5	0	0	0	0	0	12	0	0	16	0	0	0
6	0	0	0	0	0	11	0	0	20	0	0	0
7	0	0	0	0	0	8.7	0	0	17	0	0	0
8	0	0	0	0	0	8.1	0	0	15	0	0	0
9	0	0	0	0	0	8.0	0	0	14	0	0	0
10	0	0	0	0	0	8.7	1.2	0	7.5	0	0	0
11	0	0	0	.24	0	7.9	11	0	0	0	0	0
12	0	0	0	.11	.11	4.9	11	0	6.7	0	0	0
13	0	0	0	.03	.17	6.0	10	0	1.5	0	0	0
14	0	0	0	0	.08	.22	10	0	6.1	0	0	0
15	0	0	0	0	0	.08	6.0	0	8.4	0	0	0
16	0	0	0	.09	0	0	.39	0	1.4	0	0	0
17	0	0	0	0	0	0	.22	0	0	0	0	0
18	0	0	0	0	0	0	.22	0	0	0	0	0
19	0	0	0	0	0	0	.22	0	0	0	0	0
20	0	0	0	0	0	0	.19	0	0	0	0	0
21	0	0	0	0	0	0	.04	0	0	0	0	0
22	0	0	0	0	0	0	0	0	0	0	0	0
23	0	0	0	0	0	0	0	0	0	0	0	0
24	0	0	0	0	0	0	0	0	0	0	0	0
25	0	0	0	0	0	0	0	.15	0	0	0	0
26	0	0	0	0	0	0	0	1.4	0	0	0	0
27	0	0	0	0	0	0	0	1.5	0	0	0	0
28	0	0	0	0	0	0	0	1.8	0	0	0	0
29	0	0	0	0	------	0	0	7.3	0	0	0	0
30	0	0	0	0	------	0	0	18	0	0	0	0
31	0	------	0	0	------	0	------	17	------	0	0	------
TOTAL	0	0	0	0.47	0.36	105.00	50.48	47.15	209.6	0	0	0
MEAN	0	0	0	.015	.013	3.39	1.68	1.52	6.99	0	0	0
MAX	0	0	0	.24	.17	12	11	18	27	0	0	0
MIN	0	0	0	0	0	0	0	0	0	0	0	0
AC-FT	0	0	0	.9	.7	208	100	94	416	0	0	0

CAL YEAR 2000	TOTAL*	0.00	MEAN	0	MAX	0	MIN	0	AC-FT	0
WTR YEAR 2001	TOTAL	413.06	MEAN	1.13	MAX	27	MIN	0	AC-FT	819

* Incomplete Record
10-09-01
Instantaneous peak is 29 CFS @ 09:55 on 06/03/01

RUNOFF - DAILY DISCHARGE

WESTERN HYDROLOGIC SYSTEMS - (916) 885-2480

E281-R SANTA FE DAM OUTFLOW

DAILY DISCHARGE IN CUBIC FEET PER SECOND WATER YEAR OCT 2000 TO SEP 2001

Day	OCT	NOV	DEC	JAN	FEB	MAR	APR	MAY	JUN	JUL	AUG	SEP
1	0	0	0	0	0	0	0	0	0	0	0	0
2	0	0	0	0	0	0	0	0	0	0	0	0
3	0	0	0	0	0	0	0	0	0	0	0	0
4	0	0	0	0	0	0	0	0	0	0	0	0
5	0	0	0	0	0	0	0	0	0	0	0	0
6	0	0	0*	0	0	.16	0	0	0	0	0	0
7	0	0	0*	0	0	0	30	0	0	0	0	0
8	0	0	0	0	0	0	25	0	0	0	0	0
9	0	0	0	0	0	0	4.9	0	0	0	0	0
10	0	0	0	1.0	0	0	0	0	0	0	0	0
11	0	0	0	12	0	0	0	0	0	0	0	0
12	0	0	0	.22	129	0	0	0	0	0	0	0
13	0	0	0	0	9.6	0	0	0	0	0	0	0
14	0	0	0	0	7.8	0	0	0	0	0	0	0
15	0	0	0	0	0	0	0	0	0	0	0	0
16	0	0	0	0	0	0	0	0	0	0	0	0
17	0	0	0	0	0	0	0	0	0	0	0	0
18	0	0	0	0	0	0	0	0	0	0	0	0
19	0	0	0	0	0	0	0	0	0	0	0	0
20	0	0	0	0	0	0	0	0	0	0	0	0
21	0	0	0	0	0	0	20	0	0	0	0	0
22	0	0	0	0	0	0	8.2	0	0	0	0	0
23	0	0	0	0	0	0	2.8	0	0	0	0	0
24	0	0	0	0	0	0	2.4	0	0	0	0	0
25	0	0	0	0	33	0	.83	0	0	0	0	0
26	0	0	0	0	.18	0	0	0	0	0	0	0
27	0	0	0	0	0	0	0	0	0	0	0	0
28	2.2	0	0	0	0	0	0	0	0	0	0	0
29	14	0	0	0	------	0	0	0	0	0	0	0
30	4.8	0	0	0	------	0	0	0	0	0	0	0
31	0	------	0	0	------	0	------	0	------	0	0	------
TOTAL	21.0	0	0	13.22	179.58	0.16	94.13	0	0	0	0	0
MEAN	.68	0	0	.43	6.41	.005	3.14	0	0	0	0	0
MAX	14	0	0	12	129	.16	30	0	0	0	0	0
MIN	0	0	0	0	0	0	0	0	0	0	0	0
AC-FT	42	0	0	26	356	.3	187	0	0	0	0	0

CAL YEAR 2000	TOTAL*	21.00	MEAN	.23	MAX	14	MIN	0	AC-FT	42
WTR YEAR 2001	TOTAL	308.09	MEAN	.84	MAX	129	MIN	0	AC-FT	611

* Incomplete Record
Instantaneous peak is 306 CFS @ 23:55 on 02/12/01

RUNOFF - DAILY DISCHARGE

WESTERN HYDROLOGIC SYSTEMS - (916) 885-2480

F261C-R SAN GABRIEL RIVER @ VALLEY

DAILY DISCHARGE IN CUBIC FEET PER SECOND WATER YEAR OCT 2000 TO SEP 2001

Day	OCT	NOV	DEC	JAN	FEB	MAR	APR	MAY	JUN	JUL	AUG	SEP
1	.25*	2.8	2.8									
2	.22*	2.8	2.8									
3	.18	2.8	2.8									
4	.17	2.8	57									
5	.16	2.8	147									
6	.15	2.8	201									
7	.15	2.8	201									
8	.15	2.8	201									
9	.15	2.8	201									
10	.15	2.8	201									
11	.16	2.8	201									
12	.17	2.8	201									
13	.18	2.8	201									
14	.19	2.8	201									
15	.22	2.8	201									
16	.30	2.8	201									
17	.42	2.8	201									
18	.56	2.8	201									
19	.77	2.8	86									
20	1.0	2.8	44 *									
21	1.3	2.8	2.4*									
22	1.8	2.8	2.4*									
23	2.3	2.8	2.3*									
24	2.6	2.8	2.3*									
25	2.6	2.8	2.2*									
26	2.6	2.8	2.2*									
27	2.6	2.8	2.1*									
28	2.6	2.8	2.1*									
29	2.6	2.8	2.0*		------							
30	2.6	2.8	2.0*		------							
31	2.6	------	2.0*		------		------		------			------
TOTAL	31.90	84.0	2,979.4									
MEAN	1.03	2.80	96.1									
MAX	2.6	2.8	201									
MIN	.15	2.8	2.0									
AC-FT	63	167	5,910									

				*	*	*	*	*	*	*	*	*
CAL YEAR 2000	TOTAL*	3,095.30	MEAN	33.6	MAX	201	MIN	.15	AC-FT	6,140		
WTR YEAR 2001	TOTAL*	3,095.30	MEAN	33.6	MAX	201	MIN	.15	AC-FT	6,140		

* Incomplete Record *Missing Data. Entry is of field observations.
Data as up 01/09/01 MB
Incorrect data due to inflated rubber dam

RUNOFF - DAILY DISCHARGE

WESTERN HYDROLOGIC SYSTEMS - (916) 885-2480

F209-R SAN GABRIEL RIVER BELOW COGSWELL

DAILY DISCHARGE IN CUBIC FEET PER SECOND WATER YEAR OCT 2000 TO SEP 2001

Day	OCT	NOV	DEC	JAN	FEB	MAR	APR	MAY	JUN	JUL	AUG	SEP
1	13	11	9.9	8.2	7.6	14	22	20	20	19	14	12
2	13	11	9.9	8.2	7.6	14	22	20	20	19	14	12
3	13	11	9.9	8.2	7.6	14	21	20	20	19	14	12
4	12	11	9.9	8.0	7.6	14	21	20	21	19	13	12
5	12	11	9.9	7.9	7.6	15	21	20	21	19	13	12
6	12	11	9.7	7.9	7.6	17	21	20	21	19	14	12
7	12	12	9.6	7.9	7.7	18	21	20	20	18	14	12
8	12	11	9.6	7.7	7.6	19	21	20	20	18	14	12
9	12	12	9.6	7.6	7.6	20	21	20	20	18	14	11
10	12	11	9.6	8.4	7.7	21	21	20	20	18	14	11
11	12	11	9.6	9.7	7.8	21	21	20	20	18	14	11
12	12	11	9.5	8.1	9.5	21	21	20	20	17	14	12
13	12	11	9.3	7.9	19	21	21	20	20	17	14	12
14	12	11	9.3	7.9	11	21	20	20	20	17	14	12
15	12	11	9.3	7.9	9.9	22	20	20	20	17	14	12
16	12	11	9.3	7.9	9.9	22	20	20	20	16	13	12
17	12	11	9.3	7.9	9.9	22	20	20	20	16	13	12
18	12	11	9.3	7.9	9.9	22	20	20	20	16	13	12
19	12	11	9.3	7.9	10	22	20	20	20	16	13	12
20	12	11	9.2	7.9	10	22	21	20	20	16	13	11
21	12	11	9.0	7.9	11	22	21	20	20	16	13	11
22	12	11	9.0	7.9	11	22	20	20	20	15	13	11
23	12	10	9.0	7.9	11	22	21	20	20	15	13	11
24	12	10	9.0	8.0	11	22	21	20	20	15	13	11
25	12	10	8.6	7.9	12	22	21	20	19	15	13	11
26	12	10	8.2	7.9	14	22	20	20	19	15	13	11
27	12	10	8.2	7.9	13	22	20	21	19	15	13	11
28	12	10	8.2	7.9	14	22	20	21	19	14	12	11
29	12	10	8.2	7.7	------	22	20	21	19	14	12	11
30	12	9.9	8.2	7.6	------	22	20	21	19	14	12	11
31	12	------	8.2	7.6	------	22	------	20	------	14	12	------
TOTAL	375	323.9	284.8	247.2	280.1	624	620	624	597	514	412	346
MEAN	12.1	10.8	9.19	7.97	10.0	20.1	20.7	20.1	19.9	16.6	13.3	11.5
MAX	13	12	9.9	9.7	19	22	22	21	21	19	14	12
MIN	12	9.9	8.2	7.6	7.6	14	20	20	19	14	12	11
AC-FT	744	642	565	490	556	1,240	1,230	1,240	1,180	1,020	817	686

CAL YEAR 2000	TOTAL*	983.7	MEAN	10.7	MAX	13	MIN	8.2	AC-FT	1,950
WTR YEAR 2001	TOTAL	5,248.0	MEAN	14.4	MAX	22	MIN	7.6	AC-FT	10,410

* Incomplete Record

COGSWELL DAM OUTFLOW AXSYS RECORDER STATION F-209R DATA AS OF 10-04-2001 MB

Instantaneous peak is 37 CFS @ 03:25 on 02/13/01

RUNOFF - DAILY DISCHARGE

WESTERN HYDROLOGIC SYSTEMS - (916) 885-2480
F190-R SAN GABRIEL RIVER @ FOOTHILL BLVD.

DAILY DISCHARGE IN CUBIC FEET PER SECOND WATER YEAR OCT 2000 TO SEP 2001

Day	OCT	NOV	DEC	JAN	FEB	MAR	APR	MAY	JUN	JUL	AUG	SEP
1	1.0	169	148	127	1.0	6.9	.81	1.1	5.4	.14	371	0
2	169	195	146	127	1.2	5.8	.95	1.1	6.3	.30	254	0
3	243	199	146	71	1.2	5.0	.72	1.2	7.2	.24	.24	0
4	80	200	147	.50	1.1	4.2	.81	1.1	7.9	.09	0	128
5	9.5	198	147	.30	1.0	3.8	.81	1.2	8.5	.21	0	213
6	1.5	199	147	.24	1.2	6.6	1.0	1.1	5.9	.15	238	145
7	1.5	197	147	.24	1.1	4.8	6.0	1.1	4.5	.23	373	.10
8	1.5	197	130	.14	.78	3.9	3.8	1.2	2.4	.22	362	.07
9	35	197	119	0	.94	3.9	2.4	3.4	1.6	65	138	.04
10	50	197	119	.22	1.5	6.1	2.1	3.9	1.0	149	.43	16
11	174	197	45	25	1.3	4.6	1.6	.74	.65	154	.28	69
12	125	197	1.4	19	40	4.1	1.4	.72	.25	107	.22	68
13	48	197	48	19	157	3.7	.73	.76	.38	1.4	.20	45
14	48	197	89	18	15	3.3	.60	.80	.21	.06	.20	0
15	48	197	144	18	7.5	3.0	.55	.84	.33	0	.96	0
16	135	181	142	18	5.8	2.4	.51	.88	.28	0	2.4	0
17	170	161	142	13	4.2	2.1	.61	.91	.38	0	.48	38
18	170	123	142	1.3	2.5	1.4	.43	1.1	.49	0	.44	97
19	85	119	140	1.4	2.4	1.2	.59	1.2	.30	0	.41	103
20	1.0	120	140	1.6	2.8	.72	.76	1.3	.08	0	6.2	53
21	1.0	121	140	1.6	2.6	.70	4.2	1.3	.36	0	72	.04
22	1.0	123	110	1.6	2.8	.47	2.1	1.3	.27	0	132	.03
23	122	122	.85	1.8	3.6	.60	1.2	1.4	.50	77	110	.02
24	171	122	1.0	1.3	4.7	.41	.89	1.5	.29	182	34	.02
25	170	123	1.0	1.3	22	.33	.92	1.5	.14	184	12	0
26	56	124	75	1.1	67	.34	1.1	1.5	.16	131	11	0
27	1.0	126	126	1.1	21	.36	1.1	1.6	.18	.77	57	0
28	1.0	123	126	1.2	17	.38	1.2	1.8	.10	.01	92	0
29	1.0	122	127	1.2	------	.27	1.2	1.6	.05	0	97	0
30	82	133	127	1.1	------	.26	1.1	3.2	.27	196	71	0
31	148	------	127	1.2	------	.37	------	6.3	------	377	.10	------
TOTAL	2,350.0	4,876	3,390.25	475.44	390.22	82.01	42.19	48.65	56.37	1,625.82	2,436.56	975.32
MEAN	75.8	163	109	15.3	13.9	2.65	1.41	1.57	1.88	52.4	78.6	32.5
MAX	243	200	148	127	157	6.9	6.0	6.3	8.5	377	373	213
MIN	1.0	119	.85	0	.78	.26	.43	.72	.05	0	0	0
AC-FT	4,660	9,670	6,720	943	774	163	84	96	112	3,220	4,830	1,930

CAL YEAR 2000	TOTAL*	10,616.25	MEAN	115	MAX	243	MIN	.85	AC-FT	21,060
WTR YEAR 2001	TOTAL	16,748.83	MEAN	45.9	MAX	377	MIN	0	AC-FT	33,220

* Incomplete Record SAN GABRIEL RIVER @ FOOTHILL BLVD. RUNOFF STATION AXSYS RECORDER F190-R DATA AS OF 10-16-2001. MB
Instantaneous peak is 730 CFS @ 13:55 on 12/13/00

RUNOFF - DAILY DISCHARGE

WESTERN HYDROLOGIC SYSTEMS - (916) 885-2480

F262C-R SAN GABRIEL RIVER BELOW FLORENCE

DAILY DISCHARGE IN CUBIC FEET PER SECOND WATER YEAR OCT 2000 TO SEP 2001

Day	OCT	NOV	DEC	JAN	FEB	MAR	APR	MAY	JUN	JUL	AUG	SEP
1	0	0	0	0	0	6.0	0	0	0	0	0	0
2	0	0	0	0	0	0	0	0	0	0	0	0
3	0	0	0	0	0	0	0	0	0	0v	0	0
4	0	0	0	0	0	0	0	0	0	0v	0	0
5	0	0	0	0	0	0	0	0	0	0v	0	0
6	0	0	0	0	0	.18	0	0	0	0v	0	0
7	0	0	0	0	0	.28	0	0	0	0v	0	0
8	0	0	0	0	0	0	0	0	0	0v	0	0
9	0	0	0	0	0	0	0	0	0	0v	0	0
10	0	0	0	101	0	0	0	0	0	0v	0	0
11	0	0	0	708	0	0	0	0	0	0v	0	0
12	0	0	0	.09	172	0	0	0	0	0v	0	0
13	0	0	0	0	599	0	0	0	0	0v	0	0
14	0	0	0	0	43	0	0	0	0	0v	0	0
15	0	0	0	0	0	0	0	0	0	0v	0	0
16	0	0	0	0	0	0	0	0	0	0v	0	0
17	0	0	0	0	0	0	0	0	0	0	0	0
18	0	0	0	0	0	0	0	0	0	0	0	0
19	0	0	0	0	0	0	0	0	0	0	0	0
20	0	0	0	0	0	0	0	0	0	0	0	0
21	0	0	0	0	0	0	0	0	0	0	0	0
22	0	0	0	0	0	0	0	0	0	0	0	0
23	0	0	0	0	0	0	0	0	0	0	0	0
24	0	0	0	0	0	0	0	0	0	0	0	0
25	0	0	0	0	.16	0	0	0	0	0	0	0
26	0	0	0	0	35	0	0	0	0	0	0	0
27	0	0	0	0	8.5	0	0	0	0	0	0	0
28	0	0	0	0	81	0	0	0	0	0	0	0
29	0	0	0	0	------	0	0	0	0	0	0	0
30	0	0	0	0	------	0	0	0	0	0	0	0
31	0	------	0	0	------	0	------	0	------	0	0	------
TOTAL	0	0	0	809.09	938.66	6.46	0	0	0	0	0	0
MEAN	0	0	0	26.1	33.5	.21	0	0	0	0	0	0
MAX	0	0	0	708	599	6.0	0	0	0	0	0	0
MIN	0	0	0	0	0	0	0	0	0	0	0	0
AC-FT	0	0	0	1,600	1,860	13	0	0	0	0	0	0

CAL YEAR 2000	TOTAL*	0.00	MEAN	0	MAX	0	MIN	0	AC-FT	0
WTR YEAR 2001	TOTAL	1,754.21	MEAN	4.81	MAX	708	MIN	0	AC-FT	3,480

* Incomplete Record V : Station was vandalized

Instantaneous peak is 2180 CFS @ 1:30 on 01/11/01 due to release from rubber dam

RUNOFF - DAILY DISCHARGE

WESTERN HYDROLOGIC SYSTEMS - (916) 885-2480
F263C-R SAN GABRIEL RIVER @ S.G. RIVER PARKWAY

DAILY DISCHARGE IN CUBIC FEET PER SECOND WATER YEAR OCT 2000 TO SEP 2001

Day	OCT	NOV	DEC	JAN	FEB	MAR	APR	MAY	JUN	JUL	AUG	SEP
1	1.5	52	1.1	0	.13	42	45	45	77	22	21	23
2	1.3	67	.90	0	0	34	43	44	68	23	22	27
3	1.3	163	12	0	0	58	33	34	67	21	24	26
4	1.1	172	16	0	0	263	105	33	68	25	23	28
5	1.2	166	117	0	0	169	123	34	61	45	20	26
6	1.2	139	152	.01	0	236	196	33	64	22	24	26
7	1.2	154	169	0	0	70	449	36	57	19	24	25
8	1.2	165	197	9.3	.23	24	139	36	58	15	25	23
9	1.2	118	201	13	8.5	5.8	77	35	51	17	22	23
10	1.2	118	189	387	103	194	142	29	49	16	25	23
11	1.2	120	188	1,240	23	48	179	31	51	13	27	23
12	1.2	107	100	31	1,200	35	172	31	53	13	32	22
13	1.2	104	127	15	1,210	29	54	32	51	22	31	22
14	1.3	108	129	7.6	126	24	70	30	57	23	29	23
15	1.3	128	112	5.8	56	21	145	25	54	23	31	20
16	1.3	78	87	21	63	21	153	24	53	24	31	19
17	14	1.0	82	10	67	21	185	26	55	20	32	20
18	13	.43	84	4.0	68	24	255	22	58	18	33	21
19	16	.94	112	13	115	22	146	21	53	18	32	21
20	19	1.7	17	19	188	17	61	25	45	21	31	21
21	25	1.3	13	18	111	21	289	28	44	22	27	20
22	37	1.3	12	11	24	29	141	29	46	22	27	20
23	37	13	11	32	68	25	68	28	38	23	22	19
24	32	4.3	13	276	92	31	50	27	31	17	23	23
25	29	6.6	9.7	47	798	30	46	29	28	18	22	25
26	54	9.5	6.9	283	1,080	33	87	24	47	19	23	38
27	695	7.9	.71	27	383	28	199	23	29	19	26	33
28	86	4.3	0	12	474	33	201	27	26	21	26	20
29	127	1.7	0	36	------	34	193	32	27	20	27	24
30	196	.78	0	.98	------	37	112	27	25	23	29	23
31	118	------	0	.26	------	48	------	25	------	21	23	------
TOTAL	1,517.9	2,013.75	2,159.31	2,518.95	6,257.86	1,706.8	4,158	925	1,491	645	814	707
MEAN	49.0	67.1	69.7	81.3	223	55.1	139	29.8	49.7	20.8	26.3	23.6
MAX	695	172	201	1,240	1,210	263	449	45	77	45	33	38
MIN	1.1	.43	0	0	0	5.8	33	21	25	13	20	19
AC-FT	3,010	3,990	4,280	5,000	12,410	3,390	8,250	1,830	2,960	1,280	1,610	1,400

CAL YEAR 2000	TOTAL*	5,690.96	MEAN	61.9	MAX	695	MIN	0	AC-FT	11,290
WTR YEAR 2001	TOTAL	24,914.57	MEAN	68.3	MAX	1,240	MIN	0	AC-FT	49,420

* Incomplete Record
Instantaneous peak is 4620 CFS @ 22:00 on 02/25/01

RUNOFF - DAILY DISCHARGE

WESTERN HYDROLOGIC SYSTEMS - (916) 885-2480
U8-R SAN GABRIEL RIVER BELOW MORRIS DAM

DAILY DISCHARGE IN CUBIC FEET PER SECOND WATER YEAR OCT 2000 TO SEP 2001

Day	OCT	NOV	DEC	JAN	FEB	MAR	APR	MAY	JUN	JUL	AUG	SEP
1	2.4	179	212	185	2.2	2.8	3.0	2.9	2.5	2.6	440	14
2	204	181	212	185	2.2	2.8	2.8	3.2	2.5	2.6	266	14
3	298	186	212	100	2.2	2.6	2.9	3.1	2.4	2.6	5.2	14
4	97	187	213	2.9	2.2	2.5	3.0	3.0	2.4	2.6	4.7	175
5	9.1	185	214	2.7	2.2	2.5	2.9	3.0	2.4	2.5	4.6	264
6	5.1	185	213	2.7	2.4	3.0	2.8	3.0	2.4	2.4	340	173
7	5.0	183	212	2.7	2.5	2.7	3.7	2.9	2.4	2.4	490	9.3
8	4.8	183	196	2.7	2.2	2.5	3.1	4.6	2.4	2.4	486	8.3
9	4.8	183	187	2.7	2.2	2.7	3.2	23	2.5	117	188	7.8
10	4.1	183	187	3.4	2.4	3.0	3.1	3.0	2.4	172	5.1	135
11	156	183	74	14	2.4	2.7	3.1	2.8	2.4	173	5.2	209
12	74	183	2.2	30	4.6	2.6	3.0	2.9	2.4	107	5.2	205
13	2.3	183	55	30	6.0	2.5	3.0	2.8	2.4	2.8	4.4	162
14	2.2	183	116	30	3.4	2.6	2.8	2.8	2.4	2.7	3.2	97
15	2.2	183	204	30	2.9	2.7	2.5	2.8	2.4	2.6	117	97
16	142	184	204	29	2.7	2.7	2.5	2.8	2.4	2.6	107	97
17	204	183	204	14	2.5	2.8	2.5	2.7	2.5	2.6	3.2	246
18	204	183	204	2.5	2.5	2.9	2.5	2.7	2.5	2.7	3.7	358
19	87	183	202	2.4	2.6	3.0	2.5	2.8	2.4	3.3	3.2	355
20	2.7	184	202	2.4	2.4	3.0	2.6	2.8	2.4	4.6	133	173
21	2.7	186	202	2.4	2.4	3.2	2.9	2.8	2.5	4.6	293	66
22	2.6	188	144	2.3	2.4	3.2	2.5	2.9	2.5	4.6	351	58
23	143	187	2.2	2.2	2.4	3.4	2.5	2.7	2.5	127	240	58
24	204	187	2.0	2.5	2.7	3.4	2.5	2.7	2.5	197	58	58
25	204	187	2.0	3.8	3.3	3.5	2.5	2.7	2.5	197	23	58
26	65	187	106	2.5	4.2	3.7	2.5	2.7	2.5	122	11	59
27	2.6	190	183	2.4	3.4	3.7	2.5	2.5	2.5	5.3	142	59
28	2.3	187	184	2.4	3.1	3.6	2.5	2.5	2.5	5.3	234	60
29	2.5	203	184	2.3	------	3.2	2.5	2.5	2.5	5.4	234	60
30	98	212	185	2.2	------	3.2	2.5	2.5	2.5	299	146	60
31	178	------	185	2.2	------	3.0	------	2.5	------	439	5.5	------
TOTAL	2,415.4	5,581	4,904.4	701.3	78.6	91.7	82.9	108.6	73.5	2,019.2	4,352.2	3,409.4
MEAN	77.9	186	158	22.6	2.81	2.96	2.76	3.50	2.45	65.1	140	114
MAX	298	212	214	185	6.0	3.7	3.7	23	2.5	439	490	358
MIN	2.2	179	2.0	2.2	2.2	2.5	2.5	2.5	2.4	2.4	3.2	7.8
AC-FT	4,790	11,070	9,730	1,390	156	182	164	215	146	4,010	8,630	6,760

CAL YEAR 2000	TOTAL*	12,900.8	MEAN	140	MAX	298	MIN	2.0	AC-FT	25,590
WTR YEAR 2001	TOTAL	23,818.2	MEAN	65.3	MAX	490	MIN	2.0	AC-FT	47,240

* Incomplete Record
SAN GABRIEL RIVER BELOW MORRIS DAM OUTFLOW STATION STEVEN AXSYS RECORDER U-8R
DATA AS OF 10-16-2001. MB
Instantaneous peak is 1240 CFS @ 9:10 on 05/09/01

RUNOFF - DAILY DISCHARGE

WESTERN HYDROLOGIC SYSTEMS - (916) 885-2480
0G44B-R SAN GABRIEL RIVER ABOVE WHITTIER NARROW DAM

DAILY DISCHARGE IN CUBIC FEET PER SECOND WATER YEAR OCT 2000 TO SEP 2001

Day	OCT	NOV	DEC	JAN	FEB	MAR	APR	MAY	JUN	JUL	AUG	SEP
1	0	0	0	0	0	0	0	0	0	0	0	0
2	0	0	0	0	0	0	0	0	0	0	0	0
3	0	0	0	0	0	0	0	0	0	0	0	0
4	0	0	0	0	0	0	0	0	0	0	0	0
5	0	0	0	0	0	162	0	0	0	0	0	0
6	0	0	0	0	0	52	0	0	0	0	0	0
7	0	0	0	0	0	0	483	0	0	0	0	0
8	0	0	0	0	0	0	0	0	0	0	0	0
9	0	0	0	0	0	0	0	0	0	0	0	0
10	0	0	0	375	0	0	0	0	0	0	0	0
11	0	0	0	2,050	0	0	38	0	0	0	0	0
12	0	0	0	0	2,360	0	47	0	0	0	0	0
13	0	0	50	0	1,960	0	0	0	0	0	0	0
14	0	0	110	0	0	0	0	0	0	0	0	0
15	0	0	6.3	0	0	0	0	0	0	0	0	0
16	0	0	0	0	0	0	0	0	0	0	0	0
17	0	0	0	0	0	0	65	0	0	0	0	0
18	0	0	0	0	0	0	9.0	0	0	0	0	0
19	0	0	0	0	28	0	0	0	0	0	0	0
20	0	0	0	0	9.8	0	0	0	0	0	0	0
21	0	0	0	0	0	0	220	0	0	0	0	0
22	0	0	0	0	0	0	0	0	0	0	0	0
23	0	0	0	0	0	0	0	0	0	0	0	0
24	0	0	0	0	145	0	0	0	0	0	0	0
25	0	0	0	0	1,140	0	0	0	0	0	0	0
26	0	0	0	0	16	0	0	0	0	0	0	0
27	536	0	0	0	84	0	0	0	0	0	0	0
28	0	0	0	0	72	0	0	0	0	0	0	0
29	311	0	0	0	------	0	0	0	0	0	0	0
30	0	0	0	0	------	0	0	0	0	0	0	0
31	0	------	0	0	------	0	------	0	------	0	0	------
TOTAL	847	0	166.3	2,425	5,814.8	214	862.0	0	0	0	0	0
MEAN	27.3	0	5.36	78.2	208	6.90	28.7	0	0	0	0	0
MAX	536	0	110	2,050	2,360	162	483	0	0	0	0	0
MIN	0	0	0	0	0	0	0	0	0	0	0	0
AC-FT	1,680	0	330	4,810	11,530	424	1,710	0	0	0	0	0

CAL YEAR 2000	TOTAL*	1,013.3	MEAN	11.0	MAX	536	MIN	0	AC-FT	2,010
WTR YEAR 2001	TOTAL	10,329.1	MEAN	28.3	MAX	2,360	MIN	0	AC-FT	20,490

* Incomplete Record
Instantaneous Peak Is 9210 CFS @3:20 on 01/11/01

RUNOFF - DAILY DISCHARGE

WESTERN HYDROLOGIC SYSTEMS - (916) 885-2480

F42B-R SAN GABRIEL RIVER ABOVE SPRING

DAILY DISCHARGE IN CUBIC FEET PER SECOND WATER YEAR OCT 2000 TO SEP 2001

Day	OCT	NOV	DEC	JAN	FEB	MAR	APR	MAY	JUN	JUL	AUG	SEP
1	93	93	131	96	93	123	153	276	188	335	250	90
2	94	103	133	101	99	102	153	266	181	261	264	87
3	96	100	126	104	98	100	165	295	169	206	271	90
4	94	97	127	102	92	94	164	302	122	342	275	105
5	63	92	130	103	95	95	168	309	62	313	290	113
6	41	99	131	104	97	158	165	309	63	271	199	119
7	32	105	127	104	93	102	312	300	85	227	146	126
8	29	104	131	144	95	102	166	299	175	183	157	137
9	31	105	127	102	99	100	171	286	182	185	234	140
10	32	106	123	282	117	98	169	270	180	180	280	150
11	42	104	117	2,010	100	95	179	267	103	199	271	155
12	28	104	113	142	515	97	183	253	57	192	242	161
13	28	106	111	90	1,240	92	199	229	59	201	246	163
14	28	107	105	89	183	88	203	219	85	203	246	164
15	27	100	107	88	101	91	190	219	195	184	243	160
16	27	109	108	89	102	87	209	212	209	168	201	151
17	28	105	97	92	101	94	207	199	205	156	196	144
18	29	112	100	91	95	90	218	186	129	172	193	130
19	31	114	108	92	144	86	197	187	83	175	191	126
20	32	117	109	91	106	94	194	176	94	161	185	124
21	32	126	114	94	97	95	265	180	149	181	122	97
22	31	132	112	92	99	102	192	132	284	178	71	119
23	34	128	110	96	128	114	196	62	314	181	95	118
24	37	123	110	133	132	127	193	89	312	197	175	119
25	39	129	102	99	802	134	205	176	232	204	192	124
26	46	128	108	171	1,090	139	207	176	158	205	183	139
27	298	132	115	105	172	149	210	168	175	214	111	117
28	101	136	115	96	406	151	224	163	195	223	73	117
29	169	139	116	94	------	155	249	150	324	217	80	122
30	105	138	120	99	------	156	263	65	338	224	86	119
31	93	------	115	98	------	152	------	85	------	240	91	------
TOTAL	1,890	3,393	3,598	5,293	6,591	3,462	5,969	6,505	5,107	6,578	5,859	3,826
MEAN	61.0	113	116	171	235	112	199	210	170	212	189	128
MAX	298	139	133	2,010	1,240	158	312	309	338	342	290	164
MIN	27	92	97	88	92	86	153	62	57	156	71	87
AC-FT	3,750	6,730	7,140	10,500	13,070	6,870	11,840	12,900	10,130	13,050	11,620	7,590

CAL YEAR 2000	TOTAL*	8,881	MEAN	96.5	MAX	298	MIN	27	AC-FT	17,620
WTR YEAR 2001	TOTAL	58,071	MEAN	159	MAX	2,010	MIN	27	AC-FT	115,200

* Incomplete Record
Instantaneous peak is 8480 CFS @ 1:45 on 01/11/01

RUNOFF - DAILY DISCHARGE

WESTERN HYDROLOGIC SYSTEMS - (916) 885-2480

F312B-R SAN JOSE CHANNEL BELOW SEVENTH STREET

DAILY DISCHARGE IN CUBIC FEET PER SECOND WATER YEAR OCT 2000 TO SEP 2001

Day	OCT	NOV	DEC	JAN	FEB	MAR	APR	MAY	JUN	JUL	AUG	SEP
1	9.1	29	155	24	17	55E	24	16	21	8.8	14	13
2	9.1	98	160	29	15	48E	28	18	24	8.5	14	15
3	6.9	120	160	34	21	65E	35	20	25	8.7	14	17
4	8.1	126	156	34	24	270E	28	18	23	14	14	15
5	9.7	132	150	33	18	150E	102	20	19	40	14	14
6	8.6	131	163	39	22	261E	197	20	17	16	15	13
7	11	133	164	43	22	121E	601	23	18	22	15	14
8	9.4	130	165	126	18	87E	17	22	17	19	13	17
9	10	128	170	50	21	31	122	19	17	18	15	16
10	9.4	131	169	991	168	94	161	22	16	17	15	16
11	10	134	164	2,010	33	19	148	24	15	17	16	15
12	10	128	163	47	3,320E	17	145	27	15	15	15	14
13	8.6	128	165	11	2,950E	18	147	26	14	21	14	14
14	11	128	159	12	75E	16	154	25	12	18	14	14
15	11	129	26	15	50E	16	164	25	11	18	13	16
16	8.9	134	15	17	20E	17	174	29	11	18	13	14
17	8.2	132	27	15	15E	16	165	23	12	18	14	16
18	8.2	136	22	11	15E	16	110	18	13	17	12	15
19	7.4	139	20	9.6	15E	15	21	20	11	16	12	15
20	8.2	141	20	12	125E	15	66	23	9.2	15	15	15
21	9.3	146	14	14	55E	18	473	26	9.5	14	13	15
22	12	146	22	15	25E	21	29	23	10	14	13	16
23	9.3	149	16	13	20E	15	27	23	9.3	14	13	17
24	9.6	146	18	271	185E	22	24	20	9.8	12	13	17
25	8.7	149	23	18	1,880E	22	18	20	10	14	13	15
26	44	152	22	241	1,030E	21	19	19	12	12	14	14
27	633	150	18	25	350E	24	19	25	9.4	12	14	15
28	17	149	17	19	480E	21	20	28	8.5	12	12	13
29	309	153	18	15	------	20	20	27	8.8	12	12	16
30	78	157	20	16	------	25	17	25	8.6	16	13	17
31	22	------	22	17	------	25	------	21	------	15	12	------
TOTAL	1,334.7	3,984	2,603	4,226.6	10,989	1,581	3,275	695	416.1	492.0	423	453
MEAN	43.1	133	84.0	136	392	51.0	109	22.4	13.9	15.9	13.6	15.1
MAX	633	157	170	2,010	3,320	270	601	29	25	40	16	17
MIN	6.9	29	14	9.6	15	15	17	16	8.5	8.5	12	13
AC-FT	2,650	7,900	5,160	8,380	21,800	3,140	6,500	1,380	825	976	839	899

CAL YEAR 2000	TOTAL*	7,921.7	MEAN	86.1	MAX	633	MIN	6.9	AC-FT	15,710
WTR YEAR 2001	TOTAL	30,472.4	MEAN	83.5	MAX	3,320	MIN	6.9	AC-FT	60,440

* Incomplete Record E : Estimated data

Instantaneous peak is not determined

RUNOFF - DAILY DISCHARGE

WESTERN HYDROLOGIC SYSTEMS - (916) 885-2480

F193B-R SANTA ANITA WASH @ LONGDEN AVE.

DAILY DISCHARGE IN CUBIC FEET PER SECOND WATER YEAR OCT 2000 TO SEP 2001

Day	OCT	NOV	DEC	JAN	FEB	MAR	APR	MAY	JUN	JUL	AUG	SEP
1	.62	.25	.54	.22	.31	.42	.55	2.2	.58	1.2	.66	.53
2	.67	.22	.66	.27	.36	4.1	.67	.91	.73	1.0	.51	.46
3	.95	.38	.46	.36	.43	33	.02	.67	.87	.87	.51	.48
4	.70	.43	.53	.34	.53	80	.07	1.4	.67	.74	.51	.52
5	.73	.65	.64	.29	.26	63	.01	1.6	.71	3.7	.51	.61
6	.59	.46	.48	.26	.22	9.4	.01	1.3	.54	.73	.51	.61
7	.50	.30	.54	.36	4.4	2.4	10	1.0	1.0	.72	1.2	.53
8	.47	.34	.41	1.1	.40	1.9	2.6	1.1	1.5	.75	1.1	.48
9	.32	.21	.36	.31	.34	1.5	2.5	2.8	1.7	.77	1.0	.51
10	.78	.49	.46	38	4.2	1.4	3.0	.83	.89	.97	.91	.45
11	1.2	.71	.48	69	2.2	4.9	2.2	.81	1.3	.87	1.0	.49
12	.40	.43	.54	3.9	64	1.6	2.0	1.4	1.4	.82	.96	.45
13	.29	.85	.56	.50	82	2.1 E	1.8	1.0	.94	1.1	1.2	.60
14	.37	.49	.43	.43	28	2.6 E	1.8	1.2	1.0	1.0	1.4	.60
15	.36	.53	.39	.79	2.0	1.5 E	1.7	.96	.97	.96	1.1	.77
16	.40	.63	.42	.29	1.5	.60E	1.5	1.4	.38	.76	.67	.72
17	.62	.63	.44	.27	1.1	.60E	1.4	7.7	.58	.99	.77	.80
18	.61	.57	.33	.17	.95	.50E	1.3	.59	.45	1.3	.70	.77
19	.59	.79	.45	.30	2.9	.60E	1.3	.95	.43	1.1	.87	.82
20	.68	.84	.46	.44	1.1	.50E	5.8	1.2	.64	1.0	.80	1.2
21	1.6	.67	.49	.23	.75	.60E	3.9	2.3	.62	1.1	.64	.87
22	.88	.73	.41	12	.68	.71	1.7	3.5	.82	.98	.55	.98
23	.49	.38	.29	16	3.2	.51	9.7	.87	.83	1.0	.90	.77
24	.87	.44	.16	7.8	13	.51	1.1	.86	.53	1.0	.83	1.0
25	.73	.38	.19	.20	51	.51	.78	1.1	1.1	.86	.81	.71
26	7.3	.39	.29	6.7	31	.49	.98	1.2	.81	.93	.86	.70
27	12	.33	.43	.41	1.0	.40	1.2	1.6	1.0	1.0	.79	.98
28	.58	.35	.52	.19	.41	.69	1.8	1.1	86	.98	.81	.82
29	15	.46	.35	.27	------	.76	1.2	.99	4.7	.74	.76	.73
30	1.2	.44	.25	.34	------	.60	.94	.99	1.2	.92	.55	.78
31	.38	------	.24	.28	------	1.0	------	.95	------	1.0	.56	------
TOTAL	52.88	14.77	13.20	162.02	298.24	219.40	63.53	46.48	114.89	31.86	24.95	20.74
MEAN	1.71	.49	.43	5.23	10.7	7.08	2.12	1.50	3.83	1.03	.80	.69
MAX	15	.85	.66	69	82	80	10	7.7	86	3.7	1.4	1.2
MIN	.29	.21	.16	.17	.22	.40	.01	.59	.38	.72	.51	.45
AC-FT	105	29	26	321	592	435	126	92	228	63	49	41

CAL YEAR 2000	TOTAL*	80.85	MEAN	.88	MAX	15	MIN	.16	AC-FT	160
WTR YEAR 2001	TOTAL	1,062.96	MEAN	2.91	MAX	86	MIN	.01	AC-FT	2,110

* Incomplete Record E : Data estimated

SANTA ANITA WASH AT LONGDEN AVE. RUNOFF STATION AXSYS RECORDER F-193BR DATA AS OF 10/10/01. MB

Instantaneous peak is 430 CFS @ 01:35 on 01/11/01

RUNOFF - DAILY DISCHARGE

WESTERN HYDROLOGIC SYSTEMS - (916) 885-2480
F260C-R SANTA ANITA WASH BELOW FOOTHILL BLVD.

DAILY DISCHARGE IN CUBIC FEET PER SECOND WATER YEAR OCT 2000 TO SEP 2001

Day	OCT	NOV	DEC	JAN	FEB	MAR	APR	MAY	JUN	JUL	AUG	SEP
1	.23	.23	.56	.23	.23	.34	.35	.23	.46	.94	.70	.70
2	.23	.19	1.1	.23	.23	.23	.21	.24	.50	.93	.70	.70
3	.23	0	.22	.16	.23	.23	0	.23	.46	.93	.70	.70
4	.23	.15	.37	.16	.23	.40	.01	.23	.55	.93	.70	.70
5	.23	0	.76	.23	.23	.89	0	.23	.93	1.2	.70	.70
6	.23	2.7	.23	.23	.23	4.2	0	.23	.93	.94	.70	.70
7	.23	.87	.23	.23	1.2	1.3	.73	.23	1.0	.93	.70	.70
8	.23	1.1	.24	.33	.23	.62	.66	.23	1.1	.93	.70	.70
9	.23	0	.23	.23	.23	4.4	1.5	1.1	1.0	.93	.70	.70
10	.23	1.0	.23	10	1.1	1.9	7.8	.70	1.1	.93	.70	.70
11	.23	.02	.28	22	.75	2.6	8.0	.71	1.1	.93	.70	.70
12	.23	0	.27	.91	19	2.0	1.2	.71	1.1	.93	.70	.70
13	.23	.52	.23	.23	30	1.5	1.2	.71	1.0	.98	.70	.70
14	.23	0	.23	.23	9.1	1.4	1.2	.70	.95	.93	.70	.70
15	.23	0	.33	.28	.43	.88	1.2	.70	.93	.93	.70	.70
16	.23	.60	.25	.23	.32	.48	1.2	.78	.46	.93	.70	.70
17	.23	0	.23	.23	.23	.26	1.2	.70	.46	.70	.70	.70
18	.23	0	.23	.23	.24	.23	.49	.70	.46	.70	.70	.70
19	.23	.98	.25	.24	.61	.39	.23	.70	.46	.70	.70	.70
20	.23	0	.23	.23	.23	.23	.91	.70	.59	.70	.70	.70
21	2.6	.15	.23	.23	.23	.23	.10	.94	.70	.70	.70	.70
22	.23	.64	.27	5.2	.23	.33	.23	1.2	.70	.70	.70	.70
23	.23	.07	.23	6.2	.47	.23	.23	.70	.70	.70	.70	.70
24	.23	.37	.23	2.0	2.1	.23	2.6	.70	.70	.70	.70	.70
25	.23	.15	.23	.23	12	.23	2.8	.70	.70	.70	.70	.70
26	6.9	.29	.23	1.3	9.7	.25	2.1	.69	.78	.70	.70	.70
27	6.9	.33	.26	.23	2.6	.23	.23	.63	.97	.70	.70	.70
28	.23	.18	.24	.23	1.6	.23	.23	.46	89	.70	.70	.70
29	12	.29	.27	.23	------	.23	.23	.46	3.4	.70	.70	.70
30	1.8	.26	.24	.23	------	.23	.23	.47	1.0	.70	.70	.70
31	.29	------	.23	.23	------	.23	------	.46	------	.73	.70	------
TOTAL	36.24	11.09	9.36	53.15	93.98	27.13	37.07	18.17	114.19	25.75	21.70	21.00
MEAN	1.17	.37	.30	1.71	3.36	.88	1.24	.59	3.81	.83	.70	.70
MAX	12	2.7	1.1	22	30	4.4	8.0	1.2	89	1.2	.70	.70
MIN	.23	0	.22	.16	.23	.23	0	.23	.46	.70	.70	.70
AC-FT	72	22	19	105	186	54	74	36	226	51	43	42

CAL YEAR 2000	TOTAL*	56.69	MEAN	.62	MAX	12	MIN	0	AC-FT	112
WTR YEAR 2001	TOTAL	468.83	MEAN	1.28	MAX	89	MIN	0	AC-FT	930

* Incomplete Record
SANTA ANITA WASH BELOW FOOTHILLS BLVD. RUNOFF STATION AXSYS RECORDER F-260CR
DATA AS OF 10/10/01. MB
Instantaneous peak is 264 CFS @ 13:40 on 06/28/01

RUNOFF - DAILY DISCHARGE

WESTERN HYDROLOGIC SYSTEMS - (916) 885-2480

F92C-R SANTA CLARA RIVER AT I-5

DAILY DISCHARGE IN CUBIC FEET PER SECOND WATER YEAR OCT 2000 TO SEP 2001

Day	OCT	NOV	DEC	JAN	FEB	MAR	APR	MAY	JUN	JUL	AUG	SEP
1	11	2.9	4.6	5.6	5.5	7.7	12	6.9	8.4	6.3	5.6	3.7
2	11	2.8	4.6	5.7	5.7	9.0	12	6.9	8.4	6.3	5.6	3.7
3	11	2.8	4.7	5.7	5.9	12	12	6.9	8.1	6.3E	5.6	3.5
4	11	2.8	4.8	5.8	6.2	15	12	6.9	8.1	6.5E	5.6	3.4
5	10	2.7	4.9	6.0	6.4	19	11	6.9	8.1	6.6E	5.4	3.4
6	9.5	2.7	5.0	6.0	6.7	22	11	7.2	8.1	6.7E	5.3	3.4
7	8.9	2.6	5.3	6.3	7.9	26	11	7.3	8.1	6.8E	5.3	3.4
8	8.4	2.8	5.3	6.7	9.5	26	10	7.3	7.8	6.9E	5.3	3.3
9	7.9	2.8	5.4	7.2	11	25	10	7.3	7.7	7.0E	5.2	3.2
10	7.4	2.8	5.5	8.3	13	23	9.9	7.3	7.7	7.1E	5.1	3.2
11	6.9	3.0	5.3	9.2	16	23	9.8	7.3	7.7	7.2E	5.1	3.2
12	6.5	3.0	4.8	10	18	21	9.4	7.3	7.7	7.2E	5.1	3.2
13	6.1	3.0	4.2	11	20	21	9.2	7.3	7.7	7.3	4.9	3.2
14	5.7	3.2	4.2	13	21	20	9.0	7.3	7.3	7.2	4.8	3.2
15	5.3	3.2	4.4	14	20	19	8.7	7.7	7.3	6.9	4.8	3.0
16	5.0	3.2	4.5	15	20	18	8.5	7.7	7.3	6.9	4.8	3.0
17	4.6	3.3	4.5	17	20	17	8.2	7.7	7.3	6.9	4.7	3.0
18	4.3	3.4	4.5	18	19	16	8.1	7.7	7.3	6.9	4.5	3.0
19	4.2	3.5	4.6	20	19	15	7.7	7.7	7.1	6.6	4.5	3.0
20	4.0	3.5	4.8	22	18	14	7.7	7.7	6.9	6.6	4.5	3.0
21	3.9	3.7	4.8	23	18	13	7.3	7.7	6.9	6.6	4.4	2.8
22	3.8	3.7	4.8	25	17	12	7.2	7.7	6.9	6.6	4.2	2.8
23	3.7	3.7	4.9	27	16	12	6.9	7.9	6.9	6.4	4.2	2.8
24	3.7	4.0	5.1	19	16	11	6.8	8.1	6.9	6.3	4.2	2.8
25	3.7	4.0	5.1	8.7	15	10	6.6	8.1	6.6	6.3	4.2	2.8
26	3.5	4.0	5.1	7.6	15	9.1	6.6	8.1	6.6	6.3	3.9	2.8
27	3.4	4.3	5.1	6.6	14	8.3	6.6	8.1	6.6	6.1	3.9	2.7
28	3.4	4.3	5.4	5.7	11	8.6	6.6	7.8	6.6	5.9	3.9	2.6
29	3.3	4.4	5.4	5.0	------	11	6.9	7.7	6.6	5.9	3.9	2.6
30	3.2	4.6	5.4	5.0	------	12	6.9	7.9	6.4	5.9	3.7	2.6
31	3.0	------	5.4	5.3	------	12	------	8.1	------	5.9	3.7	------
TOTAL	187.3	100.7	152.4	350.4	390.8	487.7	265.6	233.5	221.1	204.4	145.9	92.3
MEAN	6.04	3.36	4.92	11.3	14.0	15.7	8.85	7.53	7.37	6.59	4.71	3.08
MAX	11	4.6	5.5	27	21	26	12	8.1	8.4	7.3	5.6	3.7
MIN	3.0	2.6	4.2	5.0	5.5	7.7	6.6	6.9	6.4	5.9	3.7	2.6
AC-FT	372	200	302	695	775	967	527	463	439	405	289	183

CAL YEAR 2000	TOTAL*	440.4	MEAN	4.79	MAX	11	MIN	2.6	AC-FT	874
WTR YEAR 2001	TOTAL	2,832.1	MEAN	7.76	MAX	27	MIN	2.6	AC-FT	5,620

* Incomplete Record 10/1-1/31:N/C.higher flows likely on 1/8-1/24 due to rain & N/C.2/1-3/1: higher flow likely due to rain &N/C3/1-3/31/:N/C 4/1-4/30:N/C 5/1-5/31: N/C 6/1-6/30: N/C 7/1-7/31:N/C.power outage7/4-7/12 8/7-9/5: N/C 9/5-9/30: E: Estimated data
Instantaneous peak is 30 CFS @ 6:15 on 01/24/01

RUNOFF - DAILY DISCHARGE

WESTERN HYDROLOGIC SYSTEMS - (916) 885-2480

F280-R SANTA FE DIVERSION BELOW DAM

DAILY DISCHARGE IN CUBIC FEET PER SECOND WATER YEAR OCT 2000 TO SEP 2001

Day	OCT	NOV	DEC	JAN	FEB	MAR	APR	MAY	JUN	JUL	AUG	SEP
1	0E	0	0	.01	.01	8.3	0	.01E	0	0	0	0
2	0E	0	0	.01	.01	7.3	0	0 E	0	0	0	0
3	0	0	0	.01	0	5.9	0	0 E	.09	0	0	0
4	0	0	0	.01	0	5.2	0	0 E	.06	0	0	0
5	0	0	0	.01	0	5.5	0	0 E	.03	0	0	0
6	0	0	0	.01	0	12	0	0 E	.04	0	0	0
7	0	0	0	.01	0	9.1	0	0 E	0	0	0	0
8	0	0	0	9.6	0	6.0	0	0 E	0	0	0	0
9	0E	.05	0	0	0	4.7	0	.40E	0	0	3.6	0
10	0E	.01	0	1.3	0	9.8	0	1.1 E	0	0	1.2	0
11	0E	.01	0	16	0	6.4	0	.55E	0	0	0	0
12	0E	0	0	8.9	9.0	4.9	0	.23E	0	0	0	0
13	0E	0	0	2.0	16	3.6	0	.08E	0	0	0	0
14	0E	0	0	1.6	16	2.1	0	.02E	0	0	0	0
15	0E	0	0	1.4	11	.80	0	0 E	0	0	0	0
16	0E	0	0	1.3	2.7	.30	0	0 E	0	0	1.9	0
17	0E	0	0	1.2	1.0	.11	0	0 E	0	0	0	0
18	0E	0	0	.56	.22	.02	0	0 E	0	0	0	0
19	0E	0	0	.07	.06	0	0	0 E	0	0	0	0
20	0E	0	.01	.02	.01	0	0	0 E	0	0	0	0
21	0E	.01	.01	.01	0	0	0	0 E	0	0	0	0
22	0E	.01	.01	.01	0	0	0	0 E	0	0	0	0
23	0E	0	.01	.01	0	0	0	0 E	0	0	0	0
24	0E	0	.01	.01	1.3	0	0	0 E	0	0	0	0
25	0E	0	.01	.01	4.5	0	0	0 E	0	0	0	0
26	0E	0	.01	.01	8.5	0	.82	0 E	0	0	0	0
27	0E	0	.01	.01	8.5	0	.51	0 E	0	0	0	0
28	0E	0	.01	.01	8.3	0	.21	0 E	0	0	0	0
29	0E	0	.01	.01	------	0	.09	0 E	0	0	0	0
30	0E	0	.01	.01	------	0	.05	0 E	0	2.1	0	0
31	0E	------	.01	.01	------	0	------	.50E	------	.01	0	------
TOTAL	0	0.09	0.12	44.13	87.11	92.03	1.68	2.89	0.22	2.11	6.7	0
MEAN	0	.003	.004	1.42	3.11	2.97	.056	.093	.007	.068	.22	0
MAX	0	.05	.01	16	16	12	.82	1.1	.09	2.1	3.6	0
MIN	0	0	0	0	0	0	0	0	0	0	0	0
AC-FT	0	.2	.2	88	173	183	3.3	5.7	.4	4.2	13	0

CAL YEAR 2000	TOTAL*	0.21	MEAN	.002	MAX	.05	MIN	0	AC-FT	.4
WTR YEAR 2001	TOTAL	237.08	MEAN	.65	MAX	16	MIN	0	AC-FT	470

* Incomplete Record E : Estimated data

Instantaneous peak is 179 CFS @ 13:40 on 01/08/01

RUNOFF - DAILY DISCHARGE

WESTERN HYDROLOGIC SYSTEMS - (916) 885-2480
F125-R SANTIAGO CK. ABOVE LITTLE ROCK CK.

DAILY DISCHARGE IN CUBIC FEET PER SECOND WATER YEAR OCT 2000 TO SEP 2001

Day	OCT	NOV	DEC	JAN	FEB	MAR	APR	MAY	JUN	JUL	AUG	SEP
1	0	0	0	0	0	6.1	1.1	.58	0	0	0	0
2	0	0	0	0	0	4.3	.89	.58	0	0	0	0
3	0	0	0	0	0	3.2	.78	.46	0	0	0	0
4	0	0	0	0	0	2.8	.64	.46	0	0	0	0
5	0	0	0	0	0	6.4	.56	.41	0	0	0	0
6	0	0	0	0	0	23	.51	.32	0	0	0	0
7	0	0	0	0	0	19	1.3	.26	0	0	0	0
8	0	0	0	0	0	13	1.5	.32	0	0	0	0
9	0	0	0	0	0	8.9	1.1	.34	0	0	0	0
10	0	0	0	0	0	7.5	.88	.33	0	0	0	0
11	0	0	0	0	0	5.9	.88	.35	0	0	0	0
12	0	0	0	0	.01	4.8	.82	.64	0	0	0	0
13	0	0	0	0	.35	4.2	.96	.83	0	0	0	0
14	0	0	0	0	.07	4.0	.98	.85	0	0	0	0
15	0	0	0	0	.12	3.9	.93	.74	0	0	0	0
16	0	0	0	0	.33	3.6	.97	.56	0	0	0	0
17	0	0	0	0	.24	3.3	.92	.28	0	0	0	0
18	0	0	0	0	.20	3.3	.92	0	0	0	0	0
19	0	0	0	0	.14	4.1	1.0	0	0	0	0	0
20	0	0	0	0	.96	3.9	1.1	0	0	0	0	0
21	0	0	0	0	1.4	3.5	2.1	0	0	0	0	0
22	0	0	0	0	2.0	3.0	.96	0	0	0	0	0
23	0	0	0	0	2.2	2.4	.84	0	0	0	0	0
24	0	0	0	0	1.2	2.2	.83	0	0	0	0	0
25	0	0	0	0	1.4	2.1	.72	0	0	0	0	0
26	0	0	0	0	4.0	1.9	.72	0	0	0	0	0
27	0	0	0	0	8.6	1.9	.72	0	0	0	0	0
28	0	0	0	0	11	1.7	.70	0	0	0	0	0
29	0	0	0	0	------	1.9	.72	0	0	0	0	0
30	0	0	0	0	------	1.6	.63	0	0	0	0	0
31	0	------	0	0	------	1.3	------	0	------	0	0	------
TOTAL	0	0	0	0	34.22	158.7	27.68	8.31	0	0	0	0
MEAN	0	0	0	0	1.22	5.12	.92	.27	0	0	0	0
MAX	0	0	0	0	11	23	2.1	.85	0	0	0	0
MIN	0	0	0	0	0	1.3	.51	0	0	0	0	0
AC-FT	0	0	0	0	68	315	55	16	0	0	0	0

CAL YEAR 2000	TOTAL*	0.00	MEAN	0	MAX	0	MIN	0	AC-FT	0
WTR YEAR 2001	TOTAL	228.91	MEAN	.63	MAX	23	MIN	0	AC-FT	454

* Incomplete Record
Instantaneous peak is 37 CFS @ 10:50 on 03/06/01

RUNOFF - DAILY DISCHARGE

WESTERN HYDROLOGIC SYSTEMS - (916) 885-2480

F278-R SAWPIT CREEK BELOW SAWPIT DAM

DAILY DISCHARGE IN CUBIC FEET PER SECOND WATER YEAR OCT 2000 TO SEP 2001

Day	OCT	NOV	DEC	JAN	FEB	MAR	APR	MAY	JUN	JUL	AUG	SEP
1	1.3	1.6	1.4	1.5	1.5	3.1	1.8	1.4	1.3	.67	.45	.64E
2	1.3	1.5	1.4	1.4	1.5	3.0	1.9	1.5	1.4	.57	.81	.65E
3	1.4	1.7	1.4	1.4	1.5	2.8	1.9	1.4	1.5	.85	.81	.65E
4	1.5	1.7	1.4	1.5	1.5	2.7	1.9	1.4	1.5	1.0	.86	.65E
5	1.4	1.5	1.4	1.5	1.5	2.6	1.8	1.3	1.5	1.1	.84	.67
6	1.4	1.5	1.5	1.5	1.6	3.4	1.8	1.3	1.4	1.1	.83	.75
7	1.4	1.5	1.5	1.5	1.7	2.9	1.8	1.3	1.5	1.1	.76	.62
8	1.5	1.5	1.5	1.5	1.6	2.6	1.8	1.3	1.5	1.2	.86	.61
9	1.5	1.5	1.6	1.5	1.6	2.6	1.8	1.2	1.5	1.0	.95	.62
10	1.4	1.5	1.6	1.7	1.6	3.2	1.8	1.2	1.5	1.0	.84	.91
11	1.4	1.5	1.6	4.1	1.6	2.7	1.8	1.3	1.5	1.0	.81	.93
12	1.5	1.5	1.6	2.1	2.8	2.6	1.8	1.3	1.6	1.1	.77	.88
13	1.4	1.5	1.6	2.1	8.1	2.5	1.7	1.3	1.4	.97	.76	.83
14	1.3	1.5	1.6	1.9	3.7	2.4	1.7	1.3	1.2	1.1	.73	.75
15	1.3	1.5	1.6	1.8	2.6	2.3	1.6	1.3	1.1	1.2	.72	.69
16	1.4	1.5	1.6	1.7	2.3	2.3	1.5	1.2	1.1	1.1	.72	.69
17	1.3	1.5	1.5	1.6	2.2	2.2	1.5	1.2	1.1	1.0	.68	.76
18	1.3	1.5	1.5	1.6	2.0	2.2	1.6	1.2	1.0	.97	.56	.75
19	1.2	1.5	1.5	1.6	2.0	2.1	1.6	1.3	1.0	1.1	.63	.75
20	1.1	1.4	1.5	1.6	2.1	2.1	1.7	1.3	.94	1.2	.68	.83
21	1.1	1.4	1.5	1.5	2.0	2.0	2.0	1.3	.89	1.1	.67	.79
22	1.0	1.4	1.5	1.5	2.0	2.0	1.7	1.3	.85	1.1	.68	.74
23	1.5	1.5	1.5	1.5	2.1	1.9	1.6	1.1	.76	1.0	.68	.72
24	1.7	1.5	1.5	1.8	2.2	1.9	1.5	1.2	.75	1.3	.65	.70
25	1.7	1.4	1.5	1.7	2.9	1.9	1.4	1.2	.69	1.3	.63	.67
26	1.8	1.4	1.5	1.8	5.3	2.0	1.4	1.3	.69	1.2	.63	.69
27	2.0	1.4	1.5	1.7	3.8	2.0	1.5	1.4	.86	1.2	.58	.69
28	2.2	1.4	1.5	1.6	3.5	2.0	1.5	1.4	.55	1.2	.58	.71
29	2.2	1.5	1.5	1.6	------	2.0	1.5	1.4	.51	1.2	.59	.72
30	2.6	1.5	1.5	1.6	------	1.9	1.5	1.4	1.0	1.2	.60	.72
31	1.9	------	1.5	1.6	------	1.8	------	1.3	------	1.0	.64	------
TOTAL	47.0	44.8	46.8	53.0	68.8	73.7	50.4	40.3	34.09	33.13	22.00	21.78
MEAN	1.52	1.49	1.51	1.71	2.46	2.38	1.68	1.30	1.14	1.07	.71	.73
MAX	2.6	1.7	1.6	4.1	8.1	3.4	2.0	1.5	1.6	1.3	.95	.93
MIN	1.0	1.4	1.4	1.4	1.5	1.8	1.4	1.1	.51	.57	.45	.61
AC-FT	93	89	93	105	136	146	100	80	68	66	44	43

CAL YEAR 2000	TOTAL*	138.60	MEAN	1.51	MAX	2.6	MIN	1.0	AC-FT	275
WTR YEAR 2001	TOTAL	535.80	MEAN	1.47	MAX	8.1	MIN	.45	AC-FT	1,060

* Incomplete Record E : Data estimated due to the low battery

SAWPIT DAM OUTFLOW AXSYS RECORDER STATION F-278R DATA AS OF 10/10/01. MB

Instantaneous peak is 15 CFS @ 03:55 on 02/13/01

RUNOFF - DAILY DISCHARGE

WESTERN HYDROLOGIC SYSTEMS - (916) 885-2480

F194B-R SAWPIT WASH BELOW LIVE OAK AVE.

DAILY DISCHARGE IN CUBIC FEET PER SECOND WATER YEAR OCT 2000 TO SEP 2001

Day	OCT	NOV	DEC	JAN	FEB	MAR	APR	MAY	JUN	JUL	AUG	SEP
1	.32	1.0	.20	.11	.05	9.1	.24	.40	1.7	.14	.09	.11
2	.31	1.0	.21	52	.05	6.7	.96	.43	.19	.15	.11	.11
3	.30	1.0	.20	.22	.07	4.6	.21	.47	.21	.16	.10	.10
4	.30	1.0	.19	.22	.09	2.6	.22	.43	.15	.15	.09	.12
5	.29	.83	.20	.23	.07	2.9	.23	.43	.17	1.8	.09	.12
6	.30	.76	.20	.24	.08	43	.22	.44	.16	.24	.12	.10
7	.31	.53	.20	.25	2.0	6.1	51	.37	.17	.12	.11	.10
8	.29	.45	.20	1.0	.09	3.1	.24	.23	.18	.12	.17	.09
9	.29	.40	.20	.27	.30	11	.28	.16	.18	.12	2.0	.08
10	.29	.53	.19	57	5.7	16	.23	.16	.17	.15	2.2	.08
11	.55	.62	.20	187	1.2	5.4	.23	.17	.16	.09	.10	.31
12	.29	.66	.19	17	126	3.0	.23	.18	.17	.08	.09	.09
13	.30	.63	.19	2.0	153	.56	.22	.18	.17	.17	.10	.08
14	.30	.44	.17	.89	24	.32	.25	.19	.15	.21	.18	.08
15	.28	.21	.17	1.3	14	.19	.23	.37	.16	.10	.13	.08
16	.33	.22	.15	.38	2.3	.13	.32	.18	.15	.09	2.3	.07
17	.28	.22	.14	.23	.72	.20	.39	.17	.15	.09	1.0	.08
18	.28	.22	.17	.22	.53	.20	.38	.17	.14	.08	1.3	.10
19	.29	.21	.17	.20	2.6	.22	.40	.16	.16	.10	1.9	.14
20	.29	.22	.17	.27	.35	.24	9.4	.60	.17	.18	.10	.08
21	.36	.22	.13	.21	.08	.23	32	.18	.14	.11	.11	.16
22	.30	.22	.13	.19	.16	.22	.58	.18	.14	.09	.14	.42
23	.29	.23	.13	.20	3.2	.22	.47	.17	.17	.08	1.8	.08
24	.41	.22	.13	16	17	.22	.43	.18	.17	.10	.24	.07
25	.28	.22	.11	.34	84	.22	.40	.17	.16	.10	.10	.07
26	11	.22	.10	7.3	47	.22	.41	.18	.19	.12	.09	.08
27	23	.22	.11	.36	31	.22	.40	.43	.14	.12	.20	.08
28	.86	.20	.13	.33	23	.21	.42	.17	.14	.11	.09	.10
29	25	.20	.13	.32	------	.22	.44	.17	.17	.09	.09	.09
30	1.6	.19	.12	.28	------	.22	.43	.17	.15	.11	.10	.08
31	1.1	------	.12	.13	------	.24	------	.17	------	.10	.10	------
TOTAL	70.39	13.29	5.05	346.69	538.64	118.00	101.86	8.06	6.43	5.47	15.34	3.35
MEAN	2.27	.44	.16	11.2	19.2	3.81	3.40	.26	.21	.18	.49	.11
MAX	25	1.0	.21	187	153	43	51	.60	1.7	1.8	2.3	.42
MIN	.28	.19	.10	.11	.05	.13	.21	.16	.14	.08	.09	.07
AC-FT	140	26	10	688	1,070	234	202	16	13	11	30	6.6

CAL YEAR 2000	TOTAL*	88.73	MEAN	.96	MAX	25	MIN	.10	AC-FT	176		
WTR YEAR 2001	TOTAL	1,232.57	MEAN	3.38	MAX	187	MIN	.05	AC-FT	2,440		

* Incomplete Record

Instantaneous peak is 2200 CFS @ 16:05 on 01/02/01

RUNOFF - DAILY DISCHARGE

WESTERN HYDROLOGIC SYSTEMS - (916) 885-2480

F32B-R THOMPSON CREEK BELOW DAM

DAILY DISCHARGE IN CUBIC FEET PER SECOND WATER YEAR OCT 2000 TO SEP 2001

Day	OCT	NOV	DEC	JAN	FEB	MAR	APR	MAY	JUN	JUL	AUG	SEP
1	0	0	0	0	0	0	0	0	0	0	0	0
2	0	0	0	0	0	0	0	0	0	0	0	0
3	0	0	0	0	0	0	0	0	0	0	0	0
4	0	0	0	0	0	0	0	0	0	0	0	0
5	0	0	0	0	0	0	0	0	0	0	0	0
6	0	0	0	0	0	0	0	0	0	0	0	0
7	0	0	0	0	0	0	0	0	0	0	0	0
8	0	0	0	0	0	0	0	0	0	0	0	0
9	0	0	0	0	0	0	0	0	0	0	0	0
10	0	0	0	0	0	0	0	0	0	0	0	0
11	0	0	0	.10	0	0	0	0	0	0	0	0
12	0	0	0	.13	0	0	0	0	0	0	0	0
13	0	0	0	.13	1.1	0	0	0	0	0	0	0
14	0	0	0	.13	.03	0	0	0	0	0	0	0
15	0	0	0	.13	0	0	0	0	0	0	0	0
16	0	0	0	.15	0	0	0	0	0	0	0	0
17	0	0	0	0	0	0	0	0	0	0	0	0
18	0	0	0	0	0	0	0	0	0	0	0	0
19	0	0	0	0	0	0	0	0	0	0	0	.01
20	0	0	0	0	0	0	0	0	0	0	0	0
21	0	0	0	0	0	0	0	0	0	0	0	0
22	0	0	0	0	0	0	0	0	0	0	0	0
23	0	0	0	0	0	0	0	0	0	0	0	0
24	0	0	0	0	0	0	0	0	0	0	0	0
25	0	0	0	0	0	0	0	0	0	0	0	0
26	0	0	0	0	.23	0	0	0	0	0	0	0
27	0	0	0	0	.01	0	0	0	0	0	0	0
28	0	0	0	0	.04	0	0	0	0	0	0	0
29	0	0	0	0	------	0	0	0	0	0	0	0
30	0	0	0	0	------	0	0	0	0	0	0	0
31	0	------	0	0	------	0	------	0	------	0	0	------
TOTAL	0	0	0	0.77	1.41	0	0	0	0	0	0	0.01
MEAN	0	0	0	.025	.050	0	0	0	0	0	0	0
MAX	0	0	0	.15	1.1	0	0	0	0	0	0	.01
MIN	0	0	0	0	0	0	0	0	0	0	0	0
AC-FT	0	0	0	1.5	2.8	0	0	0	0	0	0	.02

CAL YEAR 2000	TOTAL*	0.00	MEAN	0	MAX	0	MIN	0	AC-FT	0		
WTR YEAR 2001	TOTAL	2.19	MEAN	.006	MAX	1.1	MIN	0	AC-FT	4.3		

* Incomplete Record
10-04-01
Instantaneous peak is 10 CFS @ 12:45 on 01/16/01

RUNOFF - DAILY DISCHARGE

WESTERN HYDROLOGIC SYSTEMS - (916) 885-2480

F54C-R TOPANGA CREEK ABOVE MOUTH OF CANYON

DAILY DISCHARGE IN CUBIC FEET PER SECOND WATER YEAR OCT 2000 TO SEP 2001

Day	OCT	NOV	DEC	JAN	FEB	MAR	APR	MAY	JUN	JUL	AUG	SEP
1	.45	.94	.84	1.0	3.3	9.9	10	6.9	7.4	3.4	3.1	3.0
2	.45	.85	.82	.98	3.3	9.9	10	6.9	7.4	3.4	3.1	3.0
3	.45	.73	.82	.95	3.3	9.9	10	6.4	7.6	3.3	3.1	3.0
4	.47	.70	.82	.95	3.3	10	9.9	6.2	7.3	3.2	3.1	3.0
5	.48	.72	.82	1.0	3.2	48	9.8	6.2	7.2	3.2	3.1	3.0
6	.48	.74	.82	1.0	3.2	187	9.7	6.3	7.0	3.2	3.1	3.0
7	.48	.70	.82	1.0	3.2	13	24	6.3	6.8	3.2	3.1	3.0
8	.48	.70	.82	1.2	3.2	11	11	6.1	6.6	3.2	3.1	3.0
9	.48	.70	.88	1.4	3.2	11	10	6.3	6.5	3.2	3.1	3.0
10	.48	.70	.91	124	3.3	11	9.7	6.6	6.3	3.2	3.1	3.0
11	.48	.70	.95	257	15	11	9.2	7.0	6.1	3.2	3.1	3.0
12	.48	.70	.95	34	56	11	8.9	8.2	6.1	3.2	3.1	3.0
13	.48	.70	.95	15	161	11	8.5	8.6	5.9	3.2	3.1	3.0
14	.47	.74	1.2	9.0	12	15	8.2	7.6	5.5	3.2	3.1	3.0
15	.46	.76	.96	5.0	11	20	7.9	7.6	5.1	3.1	3.1	3.0
16	.47	.76	.95	3.6	11	19	7.7	7.7	4.9	3.1	3.1	3.0
17	.47	.76	.95	3.4	11	18	7.4	7.8	4.8	3.1	3.1	3.0
18	.48	.76	.95	3.4	11	17	7.3	8.1	4.6	3.1	3.1	3.0
19	.49	.76	.95	3.4	12	16	7.3	8.3	4.4	3.1	3.1	3.0
20	.49	.76	.95	3.4	11	15	10	8.3	4.3	3.1	3.1	3.0
21	.51	.76	.95	3.4	12	13	20	8.6	4.0	3.1	3.1	3.0
22	.50	.80	.95	3.4	13	12	9.5	8.3	3.8	3.1	3.1	3.0
23	.46	.83	.95	3.1	13	12	8.5	8.6	3.7	3.1	3.1	3.0
24	.47	.82	.95	3.0	13	12	7.6	7.8	3.7	3.1	3.1	3.0
25	.47	.82	.99	3.0	47	12	6.8	7.8	3.6	3.1	3.1	3.0
26	2.9	.82	.95	3.3	143	11	6.6	7.7	3.4	3.1	3.0	3.0
27	39	.82	.95	3.4	10	11	6.8	7.9	3.4	3.1	3.0	3.0
28	1.4	.82	.95	3.4	9.9	11	7.1	7.9	3.4	3.1	3.0	3.0
29	3.1	.82	.95	3.4	------	11	7.4	7.6	3.4	3.1	3.0	3.0
30	3.2	.96	.99	3.4	------	11	6.9	7.5	3.4	3.1	3.0	3.0
31	1.1	------	1.0	3.4	------	10	------	7.4	------	3.1	3.0	------
TOTAL	62.58	23.15	28.71	506.88	604.4	599.7	283.7	230.5	157.6	98.0	95.5	90.0
MEAN	2.02	.77	.93	16.4	21.6	19.3	9.46	7.44	5.25	3.16	3.08	3.00
MAX	39	.96	1.2	257	161	187	24	8.6	7.6	3.4	3.1	3.0
MIN	.45	.70	.82	.95	3.2	9.9	6.6	6.1	3.4	3.1	3.0	3.0
AC-FT	124	46	57	1,010	1,200	1,190	563	457	313	194	189	179

CAL YEAR 2000	TOTAL*	114.44	MEAN	1.24	MAX	39	MIN	.45	AC-FT	227		
WTR YEAR 2001	TOTAL	2,780.72	MEAN	7.62	MAX	257	MIN	.45	AC-FT	5,520		

* Incomplete Record

Instantaneous peak is 2820 CFS @ 00:15 on 01/11/01

RUNOFF - DAILY DISCHARGE

WESTERN HYDROLOGIC SYSTEMS - (916) 885-2480

F252-R VERDUGO WASH @ ESTELLE AVE.

DAILY DISCHARGE IN CUBIC FEET PER SECOND WATER YEAR OCT 2000 TO SEP 2001

Day	OCT	NOV	DEC	JAN	FEB	MAR	APR	MAY	JUN	JUL	AUG	SEP
1	3.4	4.4	5.4	5.2	5.5	7.6	5.5	5.7	5.4	15	9.9	12
2	3.9	5.2	5.4	5.4	5.4	6.9	6.9	5.9	4.8	16	9.9	12
3	5.4	5.1	5.4	5.0	5.4	6.4	5.0	5.4	4.7	14	9.9	12
4	4.9	5.3	5.3	4.7	5.4	24	5.1	5.5	4.5	13	9.9	10
5	5.0	5.4	5.4	4.7	5.5	26	4.9	5.3	3.9	14	9.9	6.2
6	4.3	5.3	5.4	5.4	5.4	84	5.0	5.1	3.9	15	9.9	7.0
7	3.6	5.1	5.4	4.7	8.1	8.4	109	5.3	3.9	15	9.9	7.1
8	3.2	5.0	5.9	6.9	3.4	7.4	5.9	5.5	3.9	14	9.9	6.6
9	3.5	5.5	5.4	6.0	3.1	11	5.8	5.2	3.9	13	9.9	6.2
10	4.1	5.5	5.4	133	33	16	5.3	4.7	3.9	12	9.9	5.9
11	3.2	5.4	5.4	218	25	7.1	5.5	4.7	3.9	12	9.9	4.7
12	3.1	5.2	5.4	30	223	6.7	5.4	4.7	3.9	12	9.9	4.7
13	3.1	4.7	5.4	5.3	258	6.3	5.4	4.3	3.9	12	9.1	4.7
14	3.2	4.7	5.4	4.6	18	6.3	5.4	3.9	3.9	13	8.9	4.7
15	3.4	4.9	5.4	4.5	7.2	7.2	5.4	3.9	3.9	12	8.9	4.7
16	3.2	5.0	5.4	3.9	6.0	8.0	5.7	3.9	3.9	11	8.9	4.7
17	3.1	5.3	5.3	3.9	5.4	7.8	6.6	3.8	3.9	11	8.9	4.7
18	3.4	4.7	4.7	3.9	5.4	6.1	5.8	3.2	3.9	11	8.9	4.7
19	4.4	4.7	5.1	3.9	24	5.7	5.4	3.2	9.1	10	8.9	4.7
20	4.5	5.1	5.4	3.9	6.2	6.0	38	3.4	15	9.9	8.9	4.7
21	4.5	5.3	5.4	3.2	5.3	5.5	22	3.6	15	9.9	8.9	4.7
22	4.3	5.3	5.4	3.7	5.1	5.8	5.0	4.1	15	9.9	8.9	4.7
23	5.2	5.4	5.4	4.6	10	5.6	5.0	4.7	15	9.9	8.9	4.7
24	3.3	5.1	5.4	35	36	5.5	4.8	4.7	15	9.9	8.9	4.7
25	5.8	5.1	5.2	4.2	132	5.5	5.2	4.7	15	9.9	8.9	4.7
26	37	5.0	5.1	26	60	5.5	5.5	5.2	15	9.9	8.9	4.7
27	24	5.4	5.4	5.1	34	5.4	5.4	5.4	15	9.9	8.9	4.7
28	8.0	5.4	5.3	3.6	21	5.5	5.5	5.4	15	9.9	8.9	5.6
29	68	5.4	4.8	3.5	------	5.6	5.5	5.4	15	9.9	8.5	6.2
30	10	5.4	5.1	4.2	------	5.7	5.6	5.5	15	9.9	9.3	6.2
31	5.3	------	5.1	5.6	------	5.4	------	5.9	------	9.9	11	------
TOTAL	251.3	154.3	164.9	561.6	961.8	325.9	316.5	147.2	248.1	363.8	290.2	182.9
MEAN	8.11	5.14	5.32	18.1	34.4	10.5	10.6	4.75	8.27	11.7	9.36	6.10
MAX	68	5.5	5.9	218	258	84	109	5.9	15	16	11	12
MIN	3.1	4.4	4.7	3.2	3.1	5.4	4.8	3.2	3.9	9.9	8.5	4.7
AC-FT	498	306	327	1,110	1,910	646	628	292	492	722	576	363

CAL YEAR 2000	TOTAL*	570.5	MEAN	6.20	MAX	68	MIN	3.1	AC-FT	1,130
WTR YEAR 2001	TOTAL	3,968.5	MEAN	10.9	MAX	258	MIN	3.1	AC-FT	7,870

* Incomplete Record AS OF 090601.ALEX V. RIVERA

Instantaneous peak is 1040 CFS @ 21:50 on 01/10/01

RUNOFF - DAILY DISCHARGE

WESTERN HYDROLOGIC SYSTEMS - (916) 885-2480

F304-R WALNUT CREEK ABOVE PUENTE AVE.

DAILY DISCHARGE IN CUBIC FEET PER SECOND WATER YEAR OCT 2000 TO SEP 2001

Day	OCT	NOV	DEC	JAN	FEB	MAR	APR	MAY	JUN	JUL	AUG	SEP
1	.75	4.0	2.6	1.4	2.7	6.0	2.1	2.9	2.7	6.2	1.7	.66
2	.78	4.0	2.6	1.3	2.5	24	2.1	3.0	2.7	6.5	.03	.46
3	.84	4.4	2.6	1.3	2.1	69	2.1	3.0	2.8	5.0	.03	1.1
4	.90	4.7	2.6	1.3	2.1	176	2.7	2.9	2.6	2.7	.04	.51
5	.87	4.3	2.6	1.8	2.1	9.8	1.8	2.9	2.6	3.2	.03	.45
6	.87	4.0	2.6	1.4	2.1	64	1.7	3.0	2.6	2.4	.03	.65
7	.89	4.0	3.7	1.2	2.3	9.7	165	2.8	2.6	2.4	.03	.56
8	.87	4.0	4.6	7.4	2.1	8.6	2.1	3.0	2.6	2.4	.03	.50
9	.91	4.0	4.0	2.6	2.6	19	2.7	2.9	2.6	2.6	.24	0
10	.88	4.0	5.4	257	41	20	1.6	3.1	2.6	2.7	2.5	0
11	.89	4.0	3.2	546	2.2	8.8	1.2	3.3	2.6	2.8	3.9	0
12	.97	4.0	.69	4.4	620	8.6	1.2	3.3	2.7	2.6	3.2	0
13	1.2	4.0	1.6	1.5	355	4.0	1.3	3.2	2.6	2.7	2.7	0
14	1.6	3.3	.05	1.2	10	1.6	1.5	3.2	2.6	2.9	2.7	0
15	1.4	3.3	.11	1.6	54	1.3	1.6	3.1	2.6	3.1	2.6	0
16	1.1	4.0	.11	1.4	52	.88	1.6	3.2	2.6	3.0	2.3	0
17	1.0	4.0	.05	1.3	52	1.1	1.6	3.1	2.6	3.2	3.6	0
18	.94	4.0	.05	1.3	52	1.2	1.7	3.0	2.6	3.5	2.0	0
19	.88	3.3	.04	1.6	65	1.2	1.7	2.9	2.7	3.3	2.0	0
20	.95	3.3	2.1	1.6	28	1.2	48	2.9	2.6	3.3	2.3	0
21	.99	3.3	1.6	1.6	47	1.3	31	2.9	2.6	3.4	2.9	0
22	1.3	3.3	1.6	1.6	28	1.3	2.1	3.0	2.6	3.9	3.5	0
23	1.0	3.3	2.0	.94	20	1.4	1.9	2.9	2.7	3.7	2.2	0
24	1.3	3.3	2.1	49	55	1.6	5.4	2.9	2.6	2.9	2.4	0
25	1.1	3.3	2.0	1.6	259	1.6	6.5	2.8	2.9	2.8	2.6	0
26	14	3.3	1.8	17	83	1.6	6.5	2.9	3.6	3.0	7.1	0
27	171	3.3	1.8	5.2	58	1.6	6.6	3.0	3.5	2.9	4.1	0
28	2.8	3.1	1.8	1.2	29	1.6	6.8	2.9	3.6	3.2	1.9	0
29	49	2.6	1.8	1.9	------	1.9	6.8	2.7	3.0	3.4	2.0	0
30	2.6	2.6	1.8	1.6	------	2.1	6.8	3.1	2.2	3.1	1.8	0
31	2.1	------	1.8	1.6	------	2.1	------	2.8	------	3.1	2.3	------
TOTAL	266.68	110.0	61.40	921.84	1,930.8	454.08	325.7	92.6	81.9	101.9	64.76	4.89
MEAN	8.60	3.67	1.98	29.7	69.0	14.6	10.9	2.99	2.73	3.29	2.09	.16
MAX	171	4.7	5.4	546	620	176	165	3.3	3.6	6.5	7.1	1.1
MIN	.75	2.6	.04	.94	2.1	.88	1.2	2.7	2.2	2.4	.03	0
AC-FT	529	218	122	1,830	3,830	901	646	184	162	202	128	9.7

CAL YEAR 2000	TOTAL*	438.08	MEAN	4.76	MAX	171	MIN	.04	AC-FT	869		
WTR YEAR 2001	TOTAL	4,416.55	MEAN	12.1	MAX	620	MIN	0	AC-FT	8,760		

* Incomplete Record
AS OF 10-11-01 A.RODRIGUEZ
H2O being diverted to west bank per contractor,9-9-01 thru 9-30-01
Instantaneous peak is 2430 CFS @ 04:30 on 01/11/01

RUNOFF - DAILY DISCHARGE

WESTERN HYDROLOGIC SYSTEMS - (916) 885-2480

F40-R PUDDINGSTONE CREEK BELOW DAM

DAILY DISCHARGE IN CUBIC FEET PER SECOND WATER YEAR OCT 2000 TO SEP 2001

Day	OCT	NOV	DEC	JAN	FEB	MAR	APR	MAY	JUN	JUL	AUG	SEP
1	1.0	.93	.18	.28	.21	24	.71	.68	.80	.75	.72	.73
2	.93	.90	.18	.30	.23	61	.72	.68	.80	.68	.76	.77
3	.93	.80	.18	.30	.24	140	.70	.68	.79	.82	.86	.75
4	.93	.80	.18	.31	.27	202	.68	.71	.76	.69	.82	.84
5	1.0	.80	.18	.30	.28	.68	.68	.71	.69	.72	.79	.78
6	1.0	.80	.18	.30	.30	.73	.68	.70	.68	.68	.70	.73
7	1.1	.51	26	.30	.30	.68	.80	.72	.68	.80	.70	.73
8	1.1	.27	37	.31	.30	.68	.68	.78	.68	.78	.74	.84
9	.93	.27	30	.27	.30	.69	.68	.80	.68	.68	.72	.75
10	.93	.27	29	.60	.34	.68	.68	.80	.74	.68	.74	.68
11	.94	.27	29	1.1	.27	.68	.68	.70	.71	.73	.83	.68
12	.94	.27	30	.30	1.3	.71	.68	.68	.72	.69	.77	.70
13	.93	.27	29	.30	26	.76	.68	.71	.82	.74	.81	.69
14	.94	.27	29	.31	54	.66	.68	.68	.79	.83	.69	.69
15	.93	.29	29	.38	53	.65	.68	.68	.73	.75	.68	.74
16	.94	.30	29	.38	52	.55	.68	.78	.74	.73	.78	.78
17	.93	.29	29	.32	52	.52	.68	.68	.69	.73	.80	.68
18	.93	.27	29	.31	52	.57	.69	.68	.75	.71	.76	.72
19	.93	.25	12	.31	52	.57	.75	.68	.76	.78	.84	.70
20	1.1	.24	.30	.28	51	.57	.77	.79	.68	.68	.74	.78
21	1.0	.23	.30	.27	51	.57	.85	.69	.72	.68	.70	.83
22	.98	.21	.30	.28	17	.57	.77	.68	.73	.83	.68	.88
23	.98	.21	.27	.27	1.8	.57	.74	.68	.80	.68	.68	.87
24	1.2	.19	.27	.35	1.8	.61	.72	.68	.68	.72	.76	.80
25	.99	.18	.29	.27	1.8	.62	.77	.68	.68	.68	.77	.87
26	.95	.18	.30	.34	1.3	.60	.73	.68	.68	.75	.76	.85
27	1.0	.18	.30	.30	1.2	.57	.78	.68	.68	.73	.87	.80
28	.93	.18	.30	.27	1.1	.62	.79	.68	.75	.84	.80	.80
29	.98	.18	.30	.30	------	.68	.80	.68	.68	.73	.77	.80
30	.94	.18	.30	.34	------	.68	.68	.81	.75	.71	.69	.85
31	.93	------	.29	.28	------	.72	------	.80	------	.73	.71	------
TOTAL	30.24	10.99	371.60	10.53	473.34	444.19	21.61	22.06	21.84	22.73	23.44	23.11
MEAN	.98	.37	12.0	.34	16.9	14.3	.72	.71	.73	.73	.76	.77
MAX	1.2	.93	37	1.1	54	202	.85	.81	.82	.84	.87	.88
MIN	.93	.18	.18	.27	.21	.52	.68	.68	.68	.68	.68	.68
AC-FT	60	22	737	21	939	881	43	44	43	45	46	46

CAL YEAR 2000	TOTAL*	412.83	MEAN	4.49	MAX	37	MIN	.18	AC-FT	819
WTR YEAR 2001	TOTAL	1,475.68	MEAN	4.04	MAX	202	MIN	.18	AC-FT	2,930

* Incomplete Record
AS OF 10/11/01 A.R.
Instantaneous peak is 569 CFS @ 20:55 on 03/03/01

APPENDIX D

HYDROLOGIC REPORT 2000 – 2001

RUNOFF – STREAM GAGING STATION PEAK FLOW

RUNOFF – STREAM GAGING STATION PEAK FLOW

ALHAMBRA WASH *above* Klingerman Street
STATION NO. F81D-R

Season	Daily CFS			Total Runoff (Acre-feet)	Peak Inflow	
	Maximum	Minimum	Mean		Date	CFS
1929-30	N.D.	.0	N.D.	635.0	Mar 14	1,870
1930-31	226.0	.0	2.1	1,480.0	Feb 03	1,530
1931-32	220.0	.0	2.7	1,940.0	Jan 31	1,120
1932-33	418.0	.0	2.3	1,680.0	Jan 19	1,850
1933-34	1,770.0	.0	8.0	5,820.0	Jan 01	4,890
1934-35	219.0	.0	3.3	2,380.0	Jan 05	2,280
1935-36	144.0	.0	2.0	1,420.0	Feb 12	1,700
1936-37	309.0	.0	5.4	3,880.0	Mar 15	2,470
1937-38	997.0	.0	7.6	5,520.0	Mar 02	5,010
1938-39	288.0	.0	4.1	2,990.0	Jan 05	2,480
1939-40	130.0	.0	2.4	1,730.0	Feb 01	1,280
1940-41	219.0	.0	7.8	5,650.0	Mar 03	2,080
1941-42	193.0	.0	2.5	1,810.0	Dec 10	2,320
1942-43	893.0	.0	8.4	6,070.0	Mar 04	4,480
1943-44	454.0	+	5.6	4,100.0	Feb 22	1,860
1944-45	199.0	.1	3.1	2,250.0	Nov 11	2,220
1945-46	342.0	.1	4.1	3,000.0	Dec 22	1,600
1946-47	345.0	.1	5.2	3,800.0	Nov 13	3,810
1947-48	155.0	.1	2.8	2,040.0	Mar 24	2,670
1948-49	95.0	.2	2.8	2,020.0	Dec 17	758
1949-50	254.0	.2	4.3	3,090.0	Feb 06	1,630
1950-51	106.0	.2	3.3	2,360.0	Jan 11	1,620
1951-52	594.0	.2	12.5	9,040.0	Jan 16	3,810
1952-53	228.0	.1	4.5	3,240.0	Nov 15	3,140
1953-54	369.0	.2	5.2	3,770.0	Feb 13	2,410
1954-55	185.0	.2	4.2	3,020.0	Jan 18	1,890
1955-56	1,100.0	.3	7.6	5,520.0	Jan 26	4,550
1956-57	242.0	.6	6.1	4,440.0	Feb 23	3,090
1957-58	544.0	.3	12.8	9,270.0	Feb 19	4,830
1958-59	279.0	.2	4.2	3,020.0	Jan 06	3,170
1959-60	200.0	.1	3.8	2,720.0	Jan 11	1,710
1960-61	153.0	.3	2.5	1,790.0	Nov 05	1,480
1961-62	382.0	.1	9.1	6,270.0	Feb 12	2,560
1962-63	359.0	.1	4.0	2,880.0	Mar 16	2,210
1963-64	196.0	.2	4.0	2,870.0	Jan 21	2,210
1964-65	339.0	.1	6.4	4,610.0	Apr 09	3,730
1965-66	686.0	.3	10.7	7,740.0	Nov 24	3,520

M	Data Missing
*	Record incomplete
E	Estimate
N.D.	Not determined
**	Record not Computed
+	Less than 0.05 Acre Feet or less than 0.05 CFS, but greater than 0

RUNOFF – STREAM GAGING STATION PEAK FLOW

ALHAMBRA WASH *above* Klingerman Street
STATION NO. F81D-R

Season	Daily CFS			Total Runoff (Acre-feet)	Peak Inflow	
	Maximum	Minimum	Mean		Date	CFS
1966-67	662.0	.4	12.2	8,820.0	Jan 22	3,550
1967-68	398.0	.4	6.5	4,740.0	Mar 08	3,480
1968-69	999.0	.4	17.0	12,300.0	Feb 06	3,980
1969-70	486.0	.3	5.3	1,871.0	Feb 28	3,430
1970-71	648.0	.4	7.1	2,601.0	Nov 29	4,040
1971-72	449.0	.3	2.5	3,000.0	Dec 24	2,000
1972-73	555.0	.3	12.6	9,110.0	Feb 11	4,450
1973-74	813.0	.3	7.9	5,720.0	Jan 07	4,330
1974-75	429.0	.3	5.6	4,070.0	Dec 04	6,000
1975-76	274.0	.3	5.3	3,790.0	Feb 05	1,820
1976-77	252.0	.3	6.0	4,340.0	Oct 22	1,770
1977-78	695.0	.3	17.0	11,927.0	Mar 01	5,950
1978-79	836.0	.3	10.5	7,614.0	Mar 27	4,484
1979-80	1,240.0	.3	18.4	13,051.0	Feb 16	6,660
1980-81	196.0	.1	5.1	3,720.0	Mar 19	2,750
1981-82	371.0	.2	6.0	4,317.0	Mar 17	2,410
1982-83	1,050.0	.1	17.8	12,941.0	Mar 01	7,010
1983-84	235.0	.4	3.7	2,715.0	Dec 25	2,480
1984-85	260.0	.3	4.9	3,543.0	Dec 19	3,050
1985-86	329.0	.3	9.2	6,633.0	Mar 08	4,130
1986-87	177.0	.6	3.6	2,579.0	Oct 02	5,670
1987-88	386.0	.6	7.0	5,048.0	Dec 04	4,500
1988-89	226.0	.9	5.2	3,570.0	Dec 21	1,410
1989-90	530.0	.9	4.8	3,483.0	Feb 17	2,010
1990-91	452.0	.6	7.6	5,437.0	Mar 01	2,700
1991-92	570.0	.7	13.8	10,008.0	Feb 12	6,340
1992-93	796.0	1.0	20.5	14,810.0	Dec 07	5,880
1993-94	260.0	.5	7.1	5,157.0	Mar 24	3,000
1994-95	875.0	.2	14.3	10,380.0	Mar 10	8,080
1995-96	462.0	.4	7.0	5,071.0	Jan 31	8,110
1996-97	279.0	.3	8.7	6,260.0	Jan 15	2,640
1997-98	727.0	.6	20.2	14,660.0	Feb 06	7,770
1998-99	142.0	.3	6.1	4,400.0	Nov 28	3,500
1999-00	306.0	.4	8.5	6,170.0	Feb 21	4,480
2000-01	404.0	0.6	10.2	7,380	Jan 11	3,220

M	Data Missing
*	Record incomplete
E	Estimate
N.D.	Not determined
**	Record not Computed
+	Less than 0.05 Acre Feet or less than 0.05 CFS, but greater than 0

RUNOFF – STREAM GAGING STATION PEAK FLOW

ARCADIA WASH *below* Grand Avenue
STATION NO. F317-R

Season	Daily CFS			Total Runoff (Acre-feet)	Peak Inflow	
	Maximum	Minimum	Mean		Date	CFS
1956-57	108.0	.1	1.8	1,340.0	Feb 23	1,184
1957-58	212.0	.1	4.6	3,330.0	Feb 01	1,932
1958-59	127.0	.2	1.9	1,360.0	Jan 06	1,270
1959-60	101.0	.3	1.7	1,220.0	Apr 27	593
1960-61	69.0	+	1.1	831.0	Nov 05	570
1961-62	408.0	.1	4.7	3,400.0	Feb 11	1,480
1962-63	153.0	.2	2.1	1,510.0	Feb 09	600
1963-64	120.0	.1	2.2	1,620.0	Nov 20	1,340
1964-65	153.0	.1	3.1	2,270.0	Apr 09	1,460
1965-66	267.0	.1	4.7	3,430.0	Dec 29	1,270
1966-67	283.0	.3	6.3	4,560.0	Jan 22	1,260
1967-68	M	M	M	M		M
1968-69	M	M	M	M		M
1969-70	M	M	M	M		M
1970-71	M	M	M	M		M
1971-72	M	M	M	M		M
1972-73	M	M	M	M		M
1973-74	279.0	.3	4.0	2,910.0	Jan 07	931
1974-75	207.0	.3	3.2	2,290.0	Dec 04	2,560
1975-76	167.0	.3	3.6	2,600.0	Sep 11	1,400
1976-77	119.0	.2	2.9	2,121.0	Oct 23	1,320
1977-78	355.0	.2	9.4	6,823.0	Feb 10	4,110
1978-79	128.0	.2	4.5	3,263.0	Mar 27	1,290
1979-80	633.0	.0	9.9	7,025.0	Jan 29	3,280
1980-81	104.0	.4	2.8	1,991.0	Jan 29	1,050
1981-82	208.0	.4	4.3	3,137.0	Mar 17	2,470
1982-83	435.0	.4	10.8	7,824.0	Mar 01	4,110
1983-84	121.0	.0	3.2	2,354.0	Oct 01	1,430
1984-85	137.0	.1	4.7	3,399.0	Dec 19	1,420
1985-86	211.0	.0	8.4	6,116.0	Mar 08	1,760
1986-87	172.0	.1	3.5	2,530.0	Oct 02	2,410
1987-88	284.0	.1	5.4	3,915.0	Jan 17	4,360
1988-89	114.0	.1	3.7	2,521.0	Dec 21	502
1989-90	728.0	.1	3.5	2,505.0	Apr 17	1,330
1990-91	228.0	.1	5.0	3,598.0	Feb 28	2,120
1991-92	301.0	.1	11.1	8,043.0	Feb 12	3,190
1992-93	586.0	.3	17.3	12,560.0	Jan 17	2,720

M	Data Missing
*	Record incomplete
E	Estimate
N.D.	Not determined
**	Record not Computed
+	Less than 0.05 Acre Feet or less than 0.05 CFS, but greater than 0

RUNOFF – STREAM GAGING STATION PEAK FLOW

ARCADIA WASH *below* Grand Avenue
STATION NO. F317-R

Season	Daily CFS			Total Runoff (Acre-feet)	Peak Inflow	
	Maximum	Minimum	Mean		Date	CFS
1993-94	239.0	.0	6.4	4,661.0	Mar 19	1,360
1994-95	480.0	.1	11.1	8,032.0	Mar 11	2,740
1995-96	405.0	.4	5.2	3,764.0	Feb 20	1,560
1996-97	206.0	.5	6.3	4,540.0	Jan 26	1,430
1997-98	489.0	.6	13.3	9,640.0	Feb 06	2,850
1998-99	151.0	.5	4.2	3,020.0	Jan 26	1,040
1999-00	162.0	.1	4.3	3,150.0	Feb 21	1,750
2000-01	240.0	0.2	6.0	4,320	Jan 11	1,380

M	Data Missing
*	Record incomplete
E	Estimate
N.D.	Not determined
**	Record not Computed
+	Less than 0.05 Acre Feet or less than 0.05 CFS, but greater than 0

RUNOFF – STREAM GAGING STATION PEAK FLOW

ARROYO SECO *below* Devil's Gate Dam
STATION NO. F277-R

Season	Daily CFS			Total Runoff (Acre-feet)	Peak Inflow	
	Maximum	Minimum	Mean		Date	CFS
1942-43	3,190.0	0.0	33.4	23,895.5	Jan 23	5,640
1943-44	965.0	0.0	12.4	8,316.1	Feb 20	1,540
1944-45	187.0	0.1	3.7	2,559.5	Mar 15	610
1945-46	272.0	0.0	2.2	1,598.5	Dec 23	445
1946-47	410.0	0.0	5.7	4,147.7	Dec 27	610
1947-48	1.6	0.0	0.1	51.8		2
1948-49	1.3	0.0	0.0	17.7	Jun 13	2
1949-50	21.0	0.0	0.1	70.0	Nov 10	106
1950-51	0.3	0.0	0.0	1.4	Sep 04	26
1951-52	788.0	0.0	15.5	11,462.3	Jan 18	999
1952-53	11.8	0.0	0.1	77.0	Jan 11	25
1953-54	70.0	0.0	0.9	622.4	Jan 25	127
1954-55	1.7	0.0	0.3	195.4	Apr 30	14
1955-56	327.0	0.0	2.0	1,472.9	Jan 27	411
1956-57	5.8	0.0	0.3	234.0	Oct 04	124
1957-58	351.0	0.0	10.9	7,647.9	Feb 04	546
1958-59	129.0	0.0	0.7	482.0	Feb 16	156
1959-60	1.6	0.0	0.4	261.0	Jan 11	7
1960-61	70.0	0.0	0.6	434.6	Nov 25	360
1961-62	544.0	0.0	7.4	5,003.7	Feb 11	891
1962-63	12.0	0.0	0.5	371.6	Jun 21	51
1963-64	41.0	0.0	0.4	307.7	Jun 26	214
1964-65	28.0	0.0	0.4	312.7	Jul 12	128
1965-66	1,683.0	0.0	18.5	13,337.3	Nov 23	2,110
1966-67	858.0	0.0	9.4	6,902.7	Dec 06	1,620
1967-68						
1968-69						
1969-70						
1970-71						
1971-72						
1972-73						
1973-74						
1974-75	48.0	0.0	0.9	688.7	Apr 01	1,225
1975-76	281.0	0.0	1.8	1,289.1	Sep 11	1,040
1976-77	175.0	0.0	2.9	2,093.6	May 09	450
1977-78	1,670.0	0.0	43.9	31,799.4	Mar 04	5,790

M	Data Missing
*	Record incomplete
E	Estimate
N.D.	Not determined
**	Record not Computed
+	Less than 0.05 Acre Feet or less than 0.05 CFS, but greater than 0

RUNOFF – STREAM GAGING STATION PEAK FLOW

ARROYO SECO *below* Devil's Gate Dam
STATION NO. F277-R

Season	Daily CFS			Total Runoff (Acre-feet)	Peak Inflow	
	Maximum	Minimum	Mean		Date	CFS
1978-79	177.0	0.0	6.5	4,692.3	Feb 21	321
1979-80	3,156.0	0.0	41.1	28,630.2	Feb 17	4,844
1980-81	84.0	0.0	3.1	2,266.3	Mar 24	314
1981-82	934.0	0.0	9.1	6,619.8	Mar 18	1,276
1982-83	2,700.0	0.1	37.4	27,062.5	Mar 02	3,260
1983-84	100.0	0.0	1.5	1,074.6	Dec 01	526
1984-85	250.0	0.0	2.4	1,754.4	Dec 21	873
1985-86	109.0	0.0	4.0	2,876.8	Mar 15	349
1986-87						
1987-88	124.0	0.0	0.0	0.0		
1988-89	52.3	0.0	1.5	1,042.1	Feb 09	53
1989-90	11.8	0.0	72.4	284.8		
1990-91	572.0	0.0	7.0	506.4		
1991-92	3,530.0	0.0	44.6	32,380.2	Feb 11	5,970
1992-93	403M	1.3M	8.8M	3210.05M		M
1993-94	84.4	0.1	2.5	1,842.1	Mar 23	1,330
1994-95	505.0	0.0	33.9	24,565.9	Feb 13	691
1995-96	408.0	0.0	4.7	3,443.1	Feb 21	477
1996-97	77.0	0.0	2.3	1,678.9	Jan 15	362
1997-98	164.0	0.0	14.0	10116.63E		N.D.
1998-99	16E	0.0	0.6	455.25E		N.D.
1999-00	325E	0.0	4.3	3090E		N.D.
2000-01	620E	0.0	16.2	11760E		N.D.

M	Data Missing
*	Record incomplete
E	Estimate
N.D.	Not determined
**	Record not Computed
+	Less than 0.05 Acre Feet or less than 0.05 CFS, but greater than 0

RUNOFF – STREAM GAGING STATION PEAK FLOW

AZUSA CONDUIT (sandbox 10ft weir)
STATION NO. F220B-R

Season	Daily CFS			Total Runoff (Acre-feet)	Peak Inflow	
	Maximum	Minimum	Mean		Date	CFS
1932-33	92.4	0.0	27.5	17,043.0		
1933-34	86.0	0.0	27.3	19,770.0		
1934-35	94.0	6.2	64.3	46,570.0		
1935-36	86.0	9.1	40.7	29,500.0		
1936-37	93.0	+	29.0	21,030.0		
1937-38	94.0	+	16.4	11,910.0		
1938-39	0.0	0.0	0.0	0.0		
1939-40	90.0	+	32.7	23,760.0		
1940-41	89.0	+	23.2	16,820.0		
1941-42	91.0	+	53.0	38,360.0		
1942-43	94.0	0.1	36.6	26,510.0		
1943-44	94.0	+	56.9	41,310.0		
1944-45	96.0	+	59.2	42,910.0		
1945-46	92.0	+	55.0	39,820.0		
1946-47	92.0	0.1	64.7	46,900.0		
1947-48	60.0	+	34.4	24,960.0		
1948-49	70.0	0.1	24.0	17,380.0		
1949-50	82.0	19.0	37.5	27,140.0		
1950-51	70.0	0.0	11.5	8,310.0		
1951-52	91.0	0.0	65.2	47,300.0		
1952-53	89.0	+	43.7	31,680.0		
1953-54	89.0	+	38.8	28,090.0		
1954-55	85.0	30.0	50.6	36,600.0		
1955-56	86.0	14.8	49.0	35,580.0		
1956-57	86.0	0.0	36.8	26,670.0		
1957-58	87.0	0.0	27.8	20,140.0		
1958-59	89.0	12.4	49.4	35,730.0		
1959-60	50.0	5.3	24.6	17,850.0		
1960-61	45.0	0.0	12.2	8,820.0		
1961-62	86.0	0.0	57.4	41,570.0		
1962-63	83.0	0.0	33.0	23,930.0		
1963-64D	48.0	8.0	31.0	22,490.0		
1964-65D	81.0	0.1	35.8	25,900.0		
1965-66D	83.0	0.0	35.7	25,840.0		
1966-67B	84.0	0.0	41.8	30,250.0		
1967-68	82.0	+	50.3	36,480.0		
1968-69	54.0	0.0	1.1	777.0		

M	Data Missing
*	Record incomplete
E	Estimate
N.D.	Not determined
**	Record not Computed
+	Less than 0.05 Acre Feet or less than 0.05 CFS, but greater than 0

RUNOFF – STREAM GAGING STATION PEAK FLOW

AZUSA CONDUIT (sandbox 10ft weir)
STATION NO. F220B-R

Season	Daily CFS			Total Runoff (Acre-feet)	Peak Inflow	
	Maximum	Minimum	Mean		Date	CFS
1969-70	61.0	0.0	5.4	3,920.0		
1970-71	75.0	0.0	42.4	30,710.0		
1971-72	70.0	0.0	25.6	18,590.0		
1972-73	76.0	0.0	19.0	13,656.4		
1973-74	82.0	0.0	62.2	44,943.1		
1974-75	78.0	0.0	54.4	39,380.8		
1975-76	76.9	0.9	46.1	33,590.5		
1976-77	70.7	1.1	40.7	29,491.0		
1977-78						
1978-79						
1979-80						
1980-81						
1981-82						
1982-83*	*	*	*	*		
1983-84						
1984-85						
1985-86						
1986-87						
1987-88						
1988-89	845.0	0.0	47.0	34,048.7	Dec 06	86
1989-90						
1990-91						
1991-92						
1992-93*	84*	12.9*	63.1*	14650*		
1993-94						
1994-95						
1995-96						
1996-97						
1997-98	79.0	0.0	46.8	33,850.0	Jul 26	91
1998-99	74.0	0.0	64.2	46,450.0	Nov 27	85
1999-00	72.0	0.0	38.0	27,600.0	Jul 03	77
2000-01	73.0	0.0	44.5	32,200.0	Jul 14	76

M	Data Missing
*	Record incomplete
E	Estimate
N.D.	Not determined
**	Record not Computed
+	Less than 0.05 Acre Feet or less than 0.05 CFS, but greater than 0

RUNOFF – STREAM GAGING STATION PEAK FLOW

AZUSA CONDUIT (Sandbox 20' weir)
STATION NO. F250-R

Season	Daily CFS			Total Runoff (Acre-feet)	Peak Inflow	
	Maximum	Minimum	Mean		Date	CFS
1934-35	116*	26.1*	81*	36610*		
1935-36	109.0	.0	42.1	30,540.0		
1936-37	94.0	.0	27.3	19,740.0		
1937-38	104.0	.0	15.4	11,160.0		
1938-39	103.0	.0	5.9	4,280.0		
1939-40	94.0	.0	47.4	34,440.0		
1940-41	110.0	.0	23.8	17,220.0		
1941-42	92.0	.0	23.8	39,940.0		
1942-43	106.0	.0	44.6	32,250.0		
1943-44	97.0	.0	59.3	43,050.0		
1944-45	142.0	.0	81.5	59,050.0		
1945-46	139.0	.0	66.3	47,930.0		
1946-47	138.0	.0	73.2	52,990.0		
1947-48	60.0	.0	36.9	26,830.0		
1948-49	70.0	.0	25.0	18,120.0		
1949-50	82.0	20.0	37.4	27,060.0		
1950-51	70.0	.0	11.9	8,610.0		
1951-52	96.0	.0	65.3	47,400.0		
1952-53	89.0	.0	43.7	31,660.0		
1953-54	90.0	.0	38.8	28,070.0		
1954-55	84.0	30.0	50.6	36,610.0		
1955-56	86.0	14.7	49.0	35,580.0		
1956-57	86.0	.0	36.7	26,670.0		
1957-58	103.0	.0	29.7	21,500.0		
1958-59	90.0	12.3	49.2	35,620.0		
1959-60	50.0	5.1	24.6	17,840.0		
1960-61	45.0	.0	12.2	8,830.0		
1961-62	86.0	.0	57.1	41,330.0		
1962-63	82.0	.1	33.9	24,550.0		
1963-64	48.0	8.0	31.0	22,490.0		
1964-65	81.0	.1	35.8	25,900.0		
1965-66	83.0	.0	35.7	25,840.0		
1966-67	100.0	.0	52.7	38,130.0		
1967-68	82.0	15.0	60.4	43,810.0		
1968-69	32.0	.0	8.8	6,380.0		
1969-70	M	M	M	M		

M	Data Missing
*	Record incomplete
E	Estimate
N.D.	Not determined
**	Record not Computed
+	Less than 0.05 Acre Feet or less than 0.05 CFS, but greater than 0

RUNOFF – STREAM GAGING STATION PEAK FLOW

AZUSA CONDUIT (Sandbox 20' weir)
STATION NO. F250-R

Season	Daily CFS			Total Runoff (Acre-feet)	Peak Inflow	
	Maximum	Minimum	Mean		Date	CFS
1970-71	M	M	M	M		
1971-72	M	M	M	M		
1972-73	M	M	M	M		
1973-74	M	M	M	M		
1974-75	M	M	M	M		
1975-76	M	M	M	M		
1976-77	M	M	M	M		
1977-78	78.2	.0	1.5	16,757.0		
1978-79	105.0	49.1	72.2	26,342.0		
1979-80	101.0	1.5	39.8	14,561.0		
1980-81	99.3	.0	53.7	38,894.0		
1981-82	80.7	24.3	55.7	40,319.0		
1982-83	84.6	34.1	2.3	50,283.0		
1983-84	79.4	.0	1.5	33,803.0		
1984-85	*	*	*	*		
1985-86	80.7	.0	56.0	40,696.0		
1986-87	44.9	.0	29.2	21,124.0		
1987-88	79.4	.2	35.5	25,806.0		
1988-89	85.2	.0	46.6	33,739.0		
1989-90	34.8	.0	21.9	15,863.0		
1990-91	79.4	3.0	28.4	20,280.0		
1991-92	82.6	.0	52.0	37,764.0		
1992-93	84.0	.0	49.7	36,010.0		
1993-94	82.2	.0	58.5	42,340.0		
1994-95	83.9	.0	59.9	43,350.0		
1995-96	76.6	.0	55.4	40,190.0		
1996-97	82.0	.0	59.2	42,880.0	Jan 26	84
1997-98	83.0	.0	51.3	37,140.0	Jul 04	109
1998-99	139.0	.0	69.4	50,240.0	Nov 20	142
1999-00	73.0	.0	38.0	27,610.0	Oct 01	76
2000-01	87.0	0.0	46.5	33,640	Jul 06	90

M	Data Missing
*	Record incomplete
E	Estimate
N.D.	Not determined
**	Record not Computed
+	Less than 0.05 Acre Feet or less than 0.05 CFS, but greater than 0

RUNOFF – STREAM GAGING STATION PEAK FLOW

BALLONA CREEK *above* Sawtelle Blvd.
STATION NO. F38C-R

Season	Daily CFS			Total Runoff (Acre-feet)	Peak Inflow	
	Maximum	Minimum	Mean		Date	CFS
1927-28	N.D.	.0	N.D.	3,930.0	May 08	1,100
1928-29	1,150.0	.0	20.6	14,900.0	Mar 10	4,990
1929-30	1,130.0	.0	18.6	13,480.0	Jan 11	4,460
1930-31	1,500.0	.0	25.6	18,520.0	Apr 26	6,280
1931-32	1,780.0	.0	30.0	21,790.0	Dec 28	6,130
1932-33	1,660.0	.0	21.8	15,810.0	Jan 19	7,000
1933-34	4,310.0	.0	28.5	20,630.0	Jan 01	11,300
1934-35	2,190.0	.0	34.4	24,870.0	Apr 08	11,200
1935-36	929.0	.0	19.3	13,500.0	Feb 12	8,070
1936-37	2,160.0	.0	56.2	40,680.0	Dec 30	8,940
1937-38	7,330.0	3.6	72.5	52,500.0	Mar 02	19,000
1938-39	3,080.0	1.8	39.4	28,490.0	Dec 17	9,900
1939-40	1,270.0	1.3	29.1	21,110.0	Feb 03	9,730
1940-41	2,680.0	3.1	93.0	67,360.0	Dec 23	17,300
1941-42	990.0	2.8	23.8	17,250.0	Dec 10	7,500
1942-43	4,840.0	2.6	47.3	34,240.0	Jan 22	13,200
1943-44	3,010.0	3.4	45.4	33,000.0	Feb 22	8,800
1944-45	1,200.0	3.0	33.8	24,450.0	Nov 11	9,380
1945-46	1,830.0	3.8	25.4	18,380.0	Dec 22	7,750
1946-47	1,960.0	2.8	36.3	26,300.0	Dec 25	9,630
1947-48	1,000.0	3.5	18.8	13,630.0	Mar 24	12,710
1948-49	668.0	2.8	22.2	16,090.0	Feb 07	5,740
1949-50	1,620.0	1.4	32.1	23,250.0	Feb 06	7,670
1950-51	756.0	.7	26.1	18,860.0	Jan 10	5,460
1951-52	2,520.0	3.5	73.5	53,350.0	Jan 16	12,800
1952-53	1,140.0	4.8	27.5	19,910.0	Nov 15	11,500
1953-54	3,570.0	5.4	39.3	28,480.0	Feb 13	18,900
1954-55	1,210.0	5.4	29.8	21,600.0	Jan 18	9,370
1955-56	6,510.0	5.2	44.7	34,590.0	Jan 26	18,700
1956-57	1,790.0	6.3	30.7	22,240.0	Feb 23	13,900
1957-58	3,000.0	6.3	59.4	43,040.0	Feb 19	15,200
1958-59	1,210.0	4.2	19.0	13,730.0	Jan 06	8,170
1959-60	1,290.0	2.2	23.7	17,190.0	Jan 11	12,500
1960-61	945.0	4.2	17.3	12,560.0	Nov 05	7,700
1961-62	3,490.0	3.2	69.2	50,090.0	Feb 19	12,900
1962-63	1,940.0	3.2	29.6	21,450.0	Mar 16	12,100

M	Data Missing
*	Record incomplete
E	Estimate
N.D.	Not determined
**	Record not Computed
+	Less than 0.05 Acre Feet or less than 0.05 CFS, but greater than 0

RUNOFF – STREAM GAGING STATION PEAK FLOW

BALLONA CREEK *above* Sawtelle Blvd.
STATION NO. F38C-R

Season	Daily CFS			Total Runoff (Acre-feet)	Peak Inflow	
	Maximum	Minimum	Mean		Date	CFS
1963-64	789.0	3.9	24.8	18,000.0	Jan 22	6,420
1964-65	1,590.0	3.9	38.0	27,540.0	Apr 09	17,600
1965-66	3,620.0	5.3	61.5	44,540.0	Nov 22	18,000
1966-67	3,020.0	6.7	62.1	45,300.0	Nov 07	13,900
1967-68	6,350.0	8.2	55.9	40,570.0	Nov 21	32,500
1968-69	4,840.0	8.2	101.0	73,060.0	Jan 25	17,000
1969-70	1,380.0	7.6	30.7	22,230.0	Feb 28	1,380
1970-71	3,170.0	8.8	50.8	35,620.0	Nov 29	14,600
1971-72	1,900.0	7.6	31.3	22,700.0	Dec 24	11,100
1972-73	2,590.0	8.8	65.9	47,730.0	Jan 16	17,600
1973-74	3,510.0	8.8	56.8	41,060.0	Jan 07	11,000
1974-75	2,490.0	6.2	47.8	34,590.0	Dec 04	20,560
1975-76	1,390.0	6.2	30.6	22,230.0	Sep 10	12,940
1976-77	1,760.0	4.6	38.6	27,930.0	Oct 23	10,173
1977-78	4,441.0	4.2	112.8	81,659.0	Feb 10	28,088
1978-79	2,220.0	6.6	60.3	43,680.0	Mar 27	9,710
1979-80	4,630.0	6.2	99.2	70,454.0	Feb 15	27,000
1980-81	1,090.0	6.6	27.8	20,111.0	Mar 02	7,300
1981-82	1,380.0	5.8	41.3	29,922.0	Apr 01	8,110
1982-83	5,690.0	8.2	119.0	86,347.0	Mar 01	23,100
1983-84	1,440.0	10.0	36.7	26,672.0		N.D.
1984-85	1,810.0	8.2	38.3	27,714.0	Feb 09	9,670
1985-86	2,750.0	8.8	67.7	49,043.0	Feb 14	17,200
1986-87	752.0	7.6	19.4	13,986.0		N.D.
1987-88	2,920.0	5.0	57.5	41,772.0	Dec 04	13,400
1988-89	941.0	7.6	1.3	27,763.0	Dec 17	3,580
1989-90	3,140.0	7.6	32.3	23,364.0	Feb 17	8,090
1990-91	2,150.0	3.0	37.5	27,133.0	Mar 19	10,800
1991-92	2,490.0	7.0	62.3	45,191.0	Feb 12	17,200
1992-93	*	*	*	*		*
1993-94	1,450.0	9.7	38.9	28,150.0	Feb 07	14,400
1994-95	4,680.0	9.4	103.0	74,450.0	Mar 10	24,000
1995-96	2,930.0	12.0	53.4	38,740.0	Jan 31	8,230
1996-97	1,830.0	9.7	54.8	39,670.0	Dec 09	9,890
1997-98	3,040.0	8.3	111.0	80,630.0	Feb 06	22,900
1998-99	1,260.0	10.0	41.7	30,160.0	Jan 31	6,150

M	Data Missing
*	Record incomplete
E	Estimate
N.D.	Not determined
**	Record not Computed
+	Less than 0.05 Acre Feet or less than 0.05 CFS, but greater than 0

RUNOFF – STREAM GAGING STATION PEAK FLOW

BALLONA CREEK *above* Sawtelle Blvd.
STATION NO. F38C-R

Season	Daily CFS			Total Runoff (Acre-feet)	Peak Inflow	
	Maximum	Minimum	Mean		Date	CFS
1999-00	1,690.0	7.8	61.2	44,450.0	Feb 21	12,500
2000-01	2,540.0	7.9	86.4	62,520	Jan 11	19,400

M	Data Missing
*	Record incomplete
E	Estimate
N.D.	Not determined
**	Record not Computed
+	Less than 0.05 Acre Feet or less than 0.05 CFS, but greater than 0

RUNOFF – STREAM GAGING STATION PEAK FLOW

BIG DALTON CREEK *below* Big Dalton Dam
STATION NO. F120B-R

Season	Daily CFS			Total Runoff (Acre-feet)	Peak Inflow	
	Maximum	Minimum	Mean		Date	CFS
1939-40	1.3	0.0	0.3	206.5		
1940-41	66.0	0.0	4.0	2,888.7	Mar 05	67
1941-42	2.8	0.0	0.3	234.9		
1942-43	103.0	0.0	4.4	3,181.5	Mar 04	111
1943-44	35.0	0.0	1.7	1,159.5	Feb 23	56
1944-45	13.2	0.0	1.2	840.4	Mar 15	34
1945-46	5.0	0.0	0.8	549.1	Dec 23	34
1946-47	11.0	0.0	0.8	545.9	Oct 03	30
1947-48	2.6	0.0	0.0	15.3	Feb 05	20
1948-49	7.4	0.0	0.1	99.8	Dec 18	25
1949-50	8.7	0.0	0.2	122.0	Jan 21	11
1950-51	1.9	0.0	0.0	14.5	Jan 11	10
1951-52	33.0	0.0	2.2	1,607.4	Jan 19	34
1952-53	7.0	0.0	0.1	106.9	Jan 15	38
1953-54	8.6	0.0	0.5	363.0	Feb 15	10
1954-55	3.5	0.0	0.0	7.3	Oct 01	7
1955-56	25.0	0.0	0.3	222.1	Aug 08	37
1956-57	11.5	0.0	0.0	22.8	Nov 09	18
1957-58	28.0	0.0	3.0	2,144.7	Apr 05	37
1958-59	15.0	0.0	0.2	138.8	Apr 13	31
1959-60	1.7	0.0	0.0	10.1	Jul 21	5
1960-61	14.3	0.0	0.2	166.2	Nov 14	37
1961-62	25.0	0.0	1.4	1,001.7	Feb 17	25
1962-63	18.3	0.0	0.2	162.2	Oct 08	35
1963-64	18.0	0.0	0.4	295.9	Jan 22	3
1964-65	19.5	0.0	0.3	220.4	Apr 26	20
1965-66	32.0	0.0	2.8	1,996.6	Nov 22	52
1966-67	216.0	0.0	6.7	4,839.9	Dec 06	615
1967-68						
1968-69						
1969-70						
1970-71						
1971-72						
1972-73						
1973-74						
1974-75	11.1	0.0	0.4	295.5	May 06	125

M	Data Missing
*	Record incomplete
E	Estimate
N.D.	Not determined
**	Record not Computed
+	Less than 0.05 Acre Feet or less than 0.05 CFS, but greater than 0

RUNOFF – STREAM GAGING STATION PEAK FLOW

BIG DALTON CREEK *below* Big Dalton Dam
STATION NO. F120B-R

Season	Daily CFS			Total Runoff (Acre-feet)	Peak Inflow	
	Maximum	Minimum	Mean		Date	CFS
1975-76	12.5	0.0	0.7	487.7	Jun 08	19
1976-77	0.8	0.0	0.0	21.4	Apr 12	2
1977-78	226.0	0.0	0.3	6,185.5	Mar 05	263
1978-79	16.5	0.0	0.1	1,735.3	Apr 12	1,736
1979-80	564.0	0.1	0.3	7,435.8	Feb 17	1,170
1980-81	4.8	0.0	0.5	361.2	Jan 29	23
1981-82	21.7	0.0	1.2	903.1	Mar 25	22
1982-83	268.0	0.1	7.6	5,466.2	Mar 01	457
1983-84	6.7	0.0	0.0	705.3	Dec 25	8
1984-85	7.9	0.0	0.8	585.1	Dec 19	11
1985-86	16.1	0.0	1.2	855.1	Mar 19	18
1986-87	5.1	0.0	0.2	214.2	Jan 27	7
1987-88	7.7	0.0	0.6	444.3	Sep 12	9
1988-89	10.3	0.0	0.5	363.6	Feb 15	17
1989-90	4.7	0.0	0.1	68.6	Jan 26	5
1990-91	10.9	0.0	0.6	454.8	Mar 28	11
1991-92	19.9	0.0	1.6	1,161.0	Feb 19	22
1992-93	311.0	0.0	9.9	7,136.0	Jan 16	415
1993-94	10.1	0.0	0.4	296.0	Apr 06	13
1994-95	99.1	0.0	5.7	3,814.0	Feb 23	146
1995-96	28.0	0.0	1.7	1,251.0	Feb 22	71
1996-97	18.0	0.0	1.5	1,100.0	Jan 27	19
1997-98	183.0	0.0	6.5	4,700.0	Feb 23	539
1998-99	459.0	0.0	2.7	1,970.0	Oct 14	1,300
1999-00	10.0	0.0	0.3	241.0	Mar 27	11
2000-01	10.0	0.0	0.4	320.0	Sep 27	20

M	Data Missing
*	Record incomplete
E	Estimate
N.D.	Not determined
**	Record not Computed
+	Less than 0.05 Acre Feet or less than 0.05 CFS, but greater than 0

RUNOFF – STREAM GAGING STATION PEAK FLOW

BIG ROCK CREEK *upstream from* Pallet Creek
STATION NO. F394-R

Season	Daily CFS			Total Runoff (Acre-feet)	Peak Inflow	
	Maximum	Minimum	Mean		Date	CFS
1986-87	39.2	0.1	4.2	3,064.9	Mar 06	45
1987-88	82.7	0.0	8.8	6,422.3		
1988-89	12.6	2.0	4.7	3,547.0		
1989-90	3.5	0.3	2.0	1,323.0		
1990-91	26.6	0.0	4.1	4,003.0		
1991-92	94.7	1.2	24.6	17,879.8	Feb 11	93
1992-93*	151.0	8.5	55.9	28,728.8		
1993-94*	27.7	3.3	10.3	6,828.3		
1994-95*	4,500.0	2.6	57.3	36,513.1		
1995-96	1,510.0	2.1	15.6	11,296.9	Feb 21	6,020
1996-97*	204.0	0.7	7.2	5,186.5	Dec 09	2,750
1997-98	2,900.0	0.5	48.6	35,210.4	Feb 23	13,900
1998-99	18.0	1.0	4.4	3,189.6	Nov 28	57
1999-00*	330.0	0.5	3.9	2,853.9	Feb 20	3,450
2000-01	36.0	0.9	9.0	6,540.0	Jan 11	68

M	Data Missing
*	Record incomplete
E	Estimate
N.D.	Not determined
**	Record not Computed
+	Less than 0.05 Acre Feet or less than 0.05 CFS, but greater than 0

RUNOFF – STREAM GAGING STATION PEAK FLOW

BIG TUJUNGA CREEK *below* Big Tujunga Dam
STATION NO. F168-R

Season	Daily CFS			Total Runoff (Acre-feet)	Peak Inflow	
	Maximum	Minimum	Mean		Date	CFS
1932-33	14.9	0.5	6.2	4,491.7	Jan 19	58
1933-34	15.4	0.2	5.9	4,295.0	Jan 01	44
1934-35	339.0	0.6	14.9	10,766.1	Apr 28	547
1935-36	44.0	0.2	7.5	5,469.0	Nov 18	101
1936-37	385.4	0.1	36.4	25,852.8	Feb 16	385
1937-38	107.0	0.0	13.1	9,605.0	Mar 02	33,000
1938-39	263.0	0.7	12.5	9,095.0	Dec 23	424
1939-40	285.0	0.2	10.0	7,202.4	Jan 08	747
1940-41	1,080.0	0.2	82.8	59,098.9	Feb 21	1,590
1941-42	47.0	0.0	10.6	7,722.0	Dec 31	47
1942-43	6,640.0	0.2	72.9	52,911.9	Jan 23	17,700
1943-44	2,300.0	0.3	57.9	41,721.7	Feb 22	3,310
1944-45	221.0	0.8	17.2	12,231.5	Nov 13	300
1945-46	491.0	0.0	17.0	12,404.0	Mar 30	983
1946-47	460.0	0.7	17.7	12,827.5		
1947-48	28.0	0.4	4.9	3,579.0	Jul 15	54
1948-49	4.5	0.1	2.3	1,648.5	Aug 31	5
1949-50	5.4	0.2	2.6	1,909.5	Jul 02	6
1950-51	12.0	0.2	1.7	1,236.7	Aug 22	15
1951-52	1,040.0	0.5	35.9	26,232.0	Jan 18	1,860
1952-53	51.0	0.1	6.5	4,725.8	Sep 22	86
1953-54	128.0	0.2	7.4	5,341.3	Mar 01	158
1954-55	15.5	0.1	3.2	2,287.3	Oct 03	19
1955-56	135.0	0.1	4.6	3,403.6	Jan 26	148
1956-57	8.6	0.0	2.3	1,650.0	May 22	43
1957-58	1,120.0	0.0	38.6	27,543.3	Apr 04	1,320
1958-59	116.0	0.2	4.5	3,184.9	Feb 16	124
1959-60	6.5	0.0	2.2	1,612.6	Jun 02	7
1960-61	4.6	0.0	1.0	697.2	Nov 08	12
1961-62	1,680.0	0.0	24.7	16,857.1	Feb 11	3,700
1962-63	7.5	0.0	1.8	1,301.8	Feb 09	14
1963-64	12.5	0.0	2.6	1,914.4	Aug 26	51
1964-65	7.8	0.0	2.1	1,495.3	May 10	13
1965-66	2,110.0	0.0	41.2	29,824.9	Nov 22	2,910
1966-67	699.0	9.2	41.8	30,358.0	Dec 06	1,550
1967-68						

M	Data Missing
*	Record incomplete
E	Estimate
N.D.	Not determined
**	Record not Computed
+	Less than 0.05 Acre Feet or less than 0.05 CFS, but greater than 0

RUNOFF – STREAM GAGING STATION PEAK FLOW

BIG TUJUNGA CREEK *below* Big Tujunga Dam
STATION NO. F168-R

Season	Daily CFS			Total Runoff (Acre-feet)	Peak Inflow	
	Maximum	Minimum	Mean		Date	CFS
1968-69						
1969-70						
1970-71						
1971-72						
1972-73						
1973-74						
1974-75						
1975-76	69.0	0.0	5.3	3,861.2	Sep 11	155
1976-77	184.0	0.0	4.4	3,547.6	May 10	184
1977-78	3,700.0	0.3	125.1	90,579.4	Feb 10	18,300
1978-79	526.0	0.0	41.4	29,978.2	Mar 28	564
1979-80	2,093.0	0.2	95.6	69,176.7	Feb 16	5,840
1980-81	335.0	0.0	16.7	12,069.2	May 04	500
1981-82	393.0	0.0	22.9	16,555.8	Mar 18	470
1982-83	7,171.0	0.0	136.0	98,612.6	Mar 01	9,900
1983-84	179.0	0.1	15.6	11,314.3	Dec 25	360
1984-85	145.0	0.2	9.6	6,952.3	Dec 19	253
1985-86	351.0	0.3	16.3	11,685.8	Jan 30	475
1986-87	16.4	0.1	3.9	2,779.8		
1987-88	175.0	0.1	8.7	6,284.0		
1988-89	115.0	0.0	6.1	4,079.8		
1989-90	60.2	0.0	2.0	1,380.1		
1990-91	603.0	0.0	16.7	12,160.1	Mar 01	603
1991-92	1,280.0	0.0	43.8	31,790.0	Feb 12	1,780
1992-93	2,040.0	0.0	122.0	88,460.0	Feb 19	3,620
1993-94	113.0	0.0	15.7	9,415.0	Feb 08	159
1994-95	475.0	0.2	47.7	34,530.0	Jan 10	475
1995-96	251.0	0.0	12.0	8,107.0	Feb 21	455
1996-97	168.0	0.0	11.1	8,030.0	Jan 27	188
1997-98	1,590.0	0.0	66.0	46,970.0		
1998-99	71.0	0.0	7.7	5,580.0	Jun 04	131
1999-00	123.0	0.0	7.4	5,390.0	Feb 21	171
2000-01	175.0	0.0	9.7	7,020.0		N.D.

M	Data Missing
*	Record incomplete
E	Estimate
N.D.	Not determined
**	Record not Computed
+	Less than 0.05 Acre Feet or less than 0.05 CFS, but greater than 0

RUNOFF – STREAM GAGING STATION PEAK FLOW

BOUQUET CANYON CREEK @ Urbandale Avenue
STATION NO. F377-R

Season	Daily CFS			Total Runoff (Acre-feet)	Peak Inflow	
	Maximum	Minimum	Mean		Date	CFS
1967-68	66.0	.0	1.1	823.0	Nov 19	713
1968-69	528.0	.0	3.4	2,450.0	Feb 25	3,256
1969-70	11.0	.0	.1	11.0	Mar 01	20
1970-71	30.0	.0	2.2	1,290.0	Dec 18	273
1971-72	36.0	.0	.7	499.0	Dec 27	101
1972-73	81.0	.0	.4	300.0	Feb 11	750
1973-74	8.8	.0	+	33.0	Jan 07	20
1974-75	11.0	.0	.1	76.0	Mar 05	512
1975-76	NO RECORD					
1976-77	*	*	*	*	Aug 17	26*
1977-78	326	.0	5	3491.0	Mar 4	660
1978-79	106	.0	2.1	1554.0	Mar 28	447
1979-80	180.0	.0	7.4	5,253.0		N.D.
1980-81	44.1	.0	.9	680.0	Jan 28	530
1981-82	*	*	*	*	Mar 17	104*
1982-83	235.0	.0	4.2	3,080.0	Mar 01	448
1983-84	18.9	.0	.3	188.0		N.D.
1984-85	43.8	.0	.3	228.0	Dec 19	45
1985-86	140.0	.0	1.2	908.0	Mar 16	360
1986-87	7.7	.0	+	43.0	Mar 05	10
1987-88	52.6	.0	.6	439.0		N.D.
1988-89	137.0	.0	.6	479.0	Dec 16	339
1989-90	2.8	.0	.1	30.0		N.D.
1990-91	.3	.0	.1	9.0		N.D.
1991-92	72.3	.0	.9	662.0	Feb 12	712
1992-93	*	*	*	*		*
1993-94	28.7	.0	.8	474.0		N.D.
1994-95	301.0	.0	2.9	2,098.0	Jan 10	578
1995-96	38.3	.0	.7	544.0	Jan 31	149
1996-97	21.0	.0	.5	339.0	Dec 09	79
1997-98	258.0	.0	3.2	2,290.0	Feb 23	731
1998-99	6.5	.0	.1	89.0	Apr 12	67
1999-00	111.0	.0	.7	513.0	Feb 23	339
2000-01	0.2*	0.0*	+	20*	Oct 01	1

M	Data Missing
*	Record incomplete
E	Estimate
N.D.	Not determined
**	Record not Computed
+	Less than 0.05 Acre Feet or less than 0.05 CFS, but greater than 0

RUNOFF – STREAM GAGING STATION PEAK FLOW

BRADBURY CHANNEL *below* Central Avenue
STATION NO. F329-R

Season	Daily CFS			Total Runoff (Acre-feet)	Peak Inflow	
	Maximum	Minimum	Mean		Date	CFS
1957-58	7.3	.0	.2	170.0	Feb 19	65
1958-59	29.0	.0	.3	182.0	Jan 06	1,250
1959-60	5.2	.0	.1	59.0	Dec 24	40
1960-61	4.5	.0	.0	30.0	Nov 03	60
1961-62	50.0	.0	.7	518.0	Jan 20	316
1962-63	9.4	.0	.2	120.0	Feb 09	74
1963-64	5.6	.0	.2	114.0	Jan 22	168
1964-65	11.0	.0	.2	157.0	Apr 09	248
1965-66	46.0	.0	.6	448.0	Dec 29	587
1966-67	52.0	.0	.7	547.0	Jan 24	280
1967-68	30.0	.0	.4	319.0	Mar 08	370
1968-69	131.0	.0	2.6	938.0	Feb 06	472
1969-70	47.0	.0	.6	408.0	Mar 01	267
1970-71	20.0	.0	.4	261.0	Dec 21	130
1971-72	24.0	.0	.2	172.0	Dec 24	145
1972-73	61.0	.0	1.2	438.0	Feb 27	424
1973-74	39.0	.0	.8	609.0	Jan 07	111
1974-75	28.0	.0	.4	268.0	Dec 04	325
1975-76	14.0	+	.4	326.0	Sep 11	210
1976-77	26.4	+	.5	374.0	Oct 23	166
1977-78	75.6	+	2.7	1,670.0	Feb 10	357
1978-79	49.0	.0	1.6	1,160.0	Jan 15	297
1979-80	155.0	.0	8.3	5,984.0	Jan 28	574
1980-81	29.7	.0	1.1	781.0	Jan 29	477
1981-82	41.2	.0	1.2	870.0	Mar 17	305
1982-83	111.0	.0	2.4	1,716.0	Sep 29	422
1983-84	21.7	.0	.7	549.0	Oct 01	230
1984-85	24.4	.0	.9	672.0		N.D.
1985-86	34.8	.0	.8	581.0	Jan 31	267
1986-87	5.7	.0	.5	361.0	Jan 04	174
1987-88	166.0	.0	2.8	2,019.0	Dec 04	286
1988-89	25.3	.0	1.1	758.0	Feb 04	119
1989-90	19.6	.1	1.2	877.0	May 28	20
1990-91	44.6	.0	1.8	1,267.0	Feb 27	391
1991-92	50.9	.0	1.2	877.0	Feb 12	334
1992-93	83.6	.0	3.2	2,310.0	Jan 14	534

M	Data Missing
*	Record incomplete
E	Estimate
N.D.	Not determined
**	Record not Computed
+	Less than 0.05 Acre Feet or less than 0.05 CFS, but greater than 0

RUNOFF – STREAM GAGING STATION PEAK FLOW

BRADBURY CHANNEL *below* Central Avenue
STATION NO. F329-R

Season	Daily CFS			Total Runoff (Acre-feet)	Peak Inflow	
	Maximum	Minimum	Mean		Date	CFS
1993-94	14.6	.0	.6	470.0	Mar 24	193
1994-95	82.7	.0	2.3	1,652.0	Feb 14	170
1995-96	97.6	.0	1.8	1,283.0	Feb 20	320
1996-97	28.0	.0	1.0	708.0	Nov 21	168
1997-98	91.0	+	1.5	1,110.0	Feb 07	400
1998-99	16.0	.0	.5	351.0	Jan 26	170
1999-00	25.0	.0	1.1	826.0	Feb 20	297
2000-01	36.0	+	1.4	1,000	Jan 11	195

M	Data Missing
*	Record incomplete
E	Estimate
N.D.	Not determined
**	Record not Computed
+	Less than 0.05 Acre Feet or less than 0.05 CFS, but greater than 0

RUNOFF – STREAM GAGING STATION PEAK FLOW

BRANFORD STREET CHANNEL *below* Sharp Avenue
STATION NO. F342-R

Season	Daily CFS			Total Runoff (Acre-feet)	Peak Inflow	
	Maximum	Minimum	Mean		Date	CFS
1961-62	118.0	.0	1*	743*	Feb 19	206
1962-63	46.0	.0	.6	415.0	Apr 26	284
1963-64	32.0	.0	.5	375.0	Mar 22	275
1964-65	56.0	.0	.8	571.0	Apr 09	261
1965-66	110.0	.0	1.4	982.0	Dec 29	587
1966-67	79.0	.0	1.2	870.0	Nov 07	445
1967-68	120.0	.0	1.0	693.0	Nov 21	576
1968-69	160.0	.0	3.0	2,190.0	Feb 25	738
1969-70	65.0	.0	1.0	724.0	Feb 09	462
1970-71	175*	.0	1.6*	1162*	Nov 29	990*
1971-72	50.0	.0	.5	360.0	Dec 24	233
1972-73	50.0	.0	2.1	1,530.0	Feb 11	771
1973-74	90.0	.0	1.0	710.0	Jan 07	412
1974-75	75.0	+	.9	668.0	Mar 06	882
1975-76	61.0	.0	.8	550.0	Sep 10	742
1976-77	66.9	.0	.9	633.0	May 09	490
1977-78	126.0	.0	3.0	2,153.0	Feb 10	1,160
1978-79	80.0	.0	1.5	1,052.0	Mar 27	823
1979-80	158.0	.0	1.9	1,380.0	Feb 19	1,530
1980-81	45.6	.0	.6	471.0	Jan 29	683
1981-82	67.8	.0	1.2	685.0	Mar 17	688
1982-83	230.0	.0	2.9	2,134.0	Mar 01	1,520
1983-84	34.2	.0	.4	326.0	Dec 25	190
1984-85	53.3	.0	.6	423.0	Dec 18	800
1985-86	43.1	.0	1.1	760.0	Jan 31	728
1986-87	20.7	.0	.2	144.0	Nov 17	386
1987-88	123.0	.0	1.5	1,058.0	Oct 22	1,830
1988-89	30.2	.0	.7	478.0	Dec 20	242
1989-90	46.9	.0	.5	372.0	Jan 13	383
1990-91	64.6	.0	1.0	726.0		N.D.
1991-92	238.0	.0	2.8	2,001.0	Feb 10	1,450
1992-93	*	*	*	*		*
1993-94	35.3	.0	.7	464.0		N.D.
1994-95	175.0	.0	3.0	2,076.0	Mar 10	1,770
1995-96	68.4	.0	.9	652.0	Feb 21	574
1996-97	56.0	.1	1.3	917.0	Dec 22	578

M	Data Missing
*	Record incomplete
E	Estimate
N.D.	Not determined
**	Record not Computed
+	Less than 0.05 Acre Feet or less than 0.05 CFS, but greater than 0

RUNOFF – STREAM GAGING STATION PEAK FLOW

BRANFORD STREET CHANNEL *below* Sharp Avenue
STATION NO. F342-R

Season	Daily CFS			Total Runoff (Acre-feet)	Peak Inflow	
	Maximum	Minimum	Mean		Date	CFS
1997-98	124.0	.1	3.4	2,470.0	Feb 07	1,240
1998-99	19.0	.1	1.0	717.0	Oct 29	679
1999-00	63.0	.1	1.6	1,130.0	Apr 18	670
2000-01	95.0	0.2	2.0	1,470	Jan 11	1,080

M	Data Missing
*	Record incomplete
E	Estimate
N.D.	Not determined
**	Record not Computed
+	Less than 0.05 Acre Feet or less than 0.05 CFS, but greater than 0

RUNOFF – STREAM GAGING STATION PEAK FLOW

BURBANK WESTERN STORM DRAIN @ Riverside Drive
STATION NO. E285-R

Season	Daily CFS			Total Runoff (Acre-feet)	Peak Inflow	
	Maximum	Minimum	Mean		Date	CFS
1950-51	50.0	1.2	4.0	2,870.0	Jan 11	920
1951-52	310.0	1.2	8.9	6,490.0	Jan 16	1,400
1952-53	89.0	.0	4.7	3,400.0	Dec 20	1,380
1953-54	144.0	2.1	5.7	4,140.0	Mar 16	1,070
1954-55	123.0	1.2	5.6	4,020.0	Jan 18	849
1955-56	400.0	2.0	5.6	4,070.0	Jan 26	N.D.
1956-57	192.0	1.6	4.9	3,530.0	Feb 23	1,770
1957-58	232.0	1.9	8.2	5,950.0	Feb 19	1,270
1958-59	222.0	1.6	4.9	3,540.0	Feb 11	1,650
1959-60	112.0	1.7	4.5	3,280.0	Jan 10	854
1960-61	170.0	1.7	4.9	3,570.0	Nov 05	1,400
1961-62	583.0	1.7	10.2	7,380.0	Feb 12	2,310
1962-63	444.0	.6	6.4	4,640.0	Feb 09	1,800
1963-64	141.0	1.7	5.4	3,940.0	Mar 22	1,220
1964-65	220.0	1.7	6.9	5,010.0	Apr 01	2,570
1965-66	897.0	1.1	11.4	8,290.0	Dec 29	2,980
1966-67	730.0	3.4	15.4	11,170.0	Nov 07	3,500
1967-68	499.0	4.5	12.7	9,250.0	Mar 08	2,640
1968-69	982.0	5.0	24.4	17,640.0	Jan 25	2,830
1969-70	198.0	3.4	9.8	7,080.0	Mar 04	1,500
1970-71	771.0	2.2	12.7	9,200.0	Nov 29	4,600
1971-72	291.0	3.9	10.3	7,490.0	Oct 24	1,650
1972-73	478.0	4.5	16.1	11,670.0	Jan 18	3,130
1973-74	800.0	4.5	14.8	10,740.0	Jan 07	1,860
1974-75	318.0	5.0	12.6	9,120.0	Dec 04	2,370
1975-76	221.0	4.5	13.0	9,410.0	Sep 05	3,030
1976-77	369.0	7.9	16.8	12,164.0	Oct 23	2,880
1977-78	1,260.0	3.9	47.9	34,682.0	Feb 10	12,300
1978-79	338.0	3.9	17.1	12,387.0	Mar 17	2,620
1979-80	1,490.0	5.0	31.5	22,500.0	Feb 16	7,560
1980-81	257.0	4.5	16.5	11,965.0	Jan 29	4,340
1981-82	425.0	2.2	17.3	12,518.0	Jan 19	3,010
1982-83	1,710.0	4.5	36.6	26,506.0	Mar 01	6,320
1983-84	231.0	2.8	9.8	7,083.0	Nov 01	2,190
1984-85	363.0	1.1	9.6	6,981.0	Dec 19	2,640
1985-86	372.0	2.8	14.0	10,104.0	Jan 31	3,070

M	Data Missing
*	Record incomplete
E	Estimate
N.D.	Not determined
**	Record not Computed
+	Less than 0.05 Acre Feet or less than 0.05 CFS, but greater than 0

RUNOFF – STREAM GAGING STATION PEAK FLOW

BURBANK WESTERN STORM DRAIN @ Riverside Drive
STATION NO. E285-R

Season	Daily CFS			Total Runoff (Acre-feet)	Peak Inflow	
	Maximum	Minimum	Mean		Date	CFS
1986-87	145.0	1.7	8.3	5,843.0	Nov 18	1,150
1987-88	363.0	7.9	19.4	14,058.0	Oct 22	6,620
1988-89	194.0	4.4	12.5	9,071.0	Dec 16	1,410
1989-90	253.0	4.1	10.0	7,258.0	Feb 04	1,410
1990-91	376.0	1.2	10.7	7,626.0		N.D.
1991-92	778.0	3.0	35.6	25,812.0	Feb 10	7,220
1992-93	564.0	6.0	33.9	24,570.0	Feb 07	8,080
1993-94	355.0	5.7	16.8	12,160.0	Nov 30	5,600
1994-95	743.0	2.4	39.6	28,687.0	Mar 10	6,880
1995-96	1,330.0	5.3	22.0	15,950.0	Feb 21	5,270
1996 97	293.0	6.5	14.2	10,310.0	Jan 20	2,400
1997-98	844.0	8.4	29.9	21,670.0	Nov 26	5,240
1998-99	175.0	7.3	15.1	10,920.0	Nov 28	2,940
1999-00	279.0	6.2	16.3	11,840.0	Nov 23	3,920
2000-01	417.0	6.6	20.9	15,120	Jan 11	4,620

M	Data Missing
*	Record incomplete
E	Estimate
N.D.	Not determined
**	Record not Computed
+	Less than 0.05 Acre Feet or less than 0.05 CFS, but greater than 0

RUNOFF – STREAM GAGING STATION PEAK FLOW

COMPTON CREEK *near* Greenleaf Drive
STATION NO. F37B-R

Season	Daily CFS			Total Runoff (Acre-feet)	Peak Inflow	
	Maximum	Minimum	Mean		Date	CFS
1927-28	*	.0	*	1230*	Mar 05	240*
1928-29	197.0	.0	3.1	2,270.0	Mar 10	924
1929-30	144.0	.0	3.5	2,520.0	Mar 14	580
1930-31	137.0	+	3.3	2,400.0	Apr 26	678
1931-32	248.0	.0	4.4	3,220.0	Jan 31	757
1932-33	166.0	.0	2.4	1,780.0	Jan 19	740
1933-34	372.0	.0	3.5	2,560.0	Jan 01	960
1934-35	301.0	.0	5.7	4,170.0	Apr 08	850
1935-36	143.0	.0	4.0	2,920.0	Feb 12	824
1936-37	559.0	.0	*	*	Feb 06	1,220
1937-38	986E	*	*	*	Mar 02	N.D.
1938-39	837.0	.0	7.1	5,150.0	Sep 25	2,150
1939-40	256.0	10.0	7.4	5,340.0	Feb 03	1,630
1940-41	544.0	1.0	22.7	16,400.0	Dec 23	2,660
1941-42	236.0	3.0	10.1	7,280.0	Dec 10	1,730
1942-43	752.0	.8	11.8	8,560.0	Jan 22	2,050
1943-44	739.0	2.3	15.6	11,290.0	Feb 20	2,370
1944-45	363.0	4.4	12.7	9,210.0	Nov 11	3,010
1945-46	362.0	2.6	11.0	7,960.0	Dec 23	2,010
1946-47	474.0	4.1	13.9	10,080.0	Nov 12	2,930
1947-48	170.0	.6	7.9	5,740.0	Mar 24	1,410
1948-49	282.0	.1	5.1	3,660.0	Dec 17	2,710
1949-50	433.0	+	6.6	4,820.0	Feb 06	2,830
1950-51	209.0	+	4.9	3,550.0	Jan 10	1,790
1951-52	661.0	.1	14.7	10,650.0	Jan 18	3220E
1952-53	220.0	.1	5.6	4,020.0	Nov 15	2,380
1953-54	797.0	.1	7.5	5,410.0	Feb 13	3,600
1954-55	374.0	.1	8.4	6,080.0	Jan 18	2,710
1955-56	2,090.0	.2	12.7	9,240.0	Jan 26	4,910
1956-57	286.0	+	5.6	4,070.0	May 11	1,780
1957-58	1,100.0	+	16.0	11,610.0	Feb 19	4,640
1958-59	449.0	.0	4.6	3,330.0	Jan 06	4,320
1959-60	463.0	.0	6.3	4,590.0	Jan 11	3,220
1960-61	204.0	+	2.7	1,960.0	Nov 05	1,640
1961-62	1,060.0	.1	14.5	10,520.0	Feb 19	4,550
1962-63	576.0	+	8.8	6,400.0	Feb 10	3,310

M	Data Missing
*	Record incomplete
E	Estimate
N.D.	Not determined
**	Record not Computed
+	Less than 0.05 Acre Feet or less than 0.05 CFS, but greater than 0

RUNOFF – STREAM GAGING STATION PEAK FLOW

COMPTON CREEK *near* Greenleaf Drive
STATION NO. F37B-R

Season	Daily CFS			Total Runoff (Acre-feet)	Peak Inflow	
	Maximum	Minimum	Mean		Date	CFS
1963-64	212.0	+	4.7	3,440.0	Nov 06	2,430
1964-65	424.0	.0	7.4	5,390.0	Apr 09	2,630
1965-66	809.0	+	10.8	7,800.0	Dec 29	3,250
1966-67	765.0	+	11.8	8,560.0	Nov 07	4,650
1967-68	1,120.0	+	9.4	6,850.0	Mar 07	3,690
1968-69	1,040.0	.0	16.6	12,010.0	Jan 20	5,890
1969-70	275.0	.2	4.4	3,150.0	Jan 16	1,960
1970-71	609.0	.4	11.7	8,500.0	Nov 29	2,930
1971-72	622.0	.4	6.8	4,940.0	Dec 27	6,000
1972-73	473.0	.2	12.2	8,830.0	Nov 14	4,300
1973-74	810.0	.3	10.0	7,210.0	Jan 04	3,140
1974-75	677.0	.2	9.1	6,550.0	Dec 04	8,690
1975-76	285.0	.1	4.6	3,270.0	Feb 09	2,470
1976-77	542.0	.0	7.2	5,220.0	Aug 17	1,970
1977-78	688.0	.0	20.0	14,471.0	Mar 01	3,620
1978-79	559.0	+	12.3	8,888.0	Mar 27	2,410
1979-80	*	*	*	*	Feb 16	4,780
1980-81	440.0	.1	6.4	4,658.0	Mar 01	2,970
1981-82	237.0	.3	6.3	4647E	Jan 01	2,720
1982-83	1,010.0	.4	21.9	16,720.0	Jan 28	6,020
1983-84	277.0	.3	5.4	3,893.0	Nov 24	2,380
1984-85	458.0	.1	7.4	5,354.0	Dec 19	4,110
1985-86	*	*	*	*		*
1986-87	187.0	.4	4.0	2,935.0	Nov 17	1,670
1987-88	443.0	.3	8.0	5,826.0	Dec 04	2,980
1988-89	258.0	.6	5.9	4,254.0	Dec 21	1,990
1989-90	755.0	.2	5.4	3,887.0	Feb 17	2,500
1990-91	527.0	.5	9.1	6,586.0	Mar 19	3,940
1991-92	510.0	.1	15.5	11,228.0	Mar 20	4,640
1992-93	717.0	.1	21.8	15,760.0	Jan 06	5,240
1993-94	290.0	.2	6.0	4,315.0	Nov 30	2,680
1994-95	1,120.0	.0	15.8	11,440.0	Jan 04	7,660
1995-96	627.0	.5	8.0	5,792.0	Jan 31	3,410
1996-97	402.0	.7	10.1	7,300.0	Dec 09	2,510
1997-98	826.0	.7	26.9	19,500.0	Feb 06	7,040
1998-99	384.0	.2	9.0	6,540.0	Nov 08	2,420

M	Data Missing
*	Record incomplete
E	Estimate
N.D.	Not determined
**	Record not Computed
+	Less than 0.05 Acre Feet or less than 0.05 CFS, but greater than 0

RUNOFF – STREAM GAGING STATION PEAK FLOW

COMPTON CREEK *near* Greenleaf Drive
STATION NO. F37B-R

Season	Daily CFS			Total Runoff (Acre-feet)	Peak Inflow	
	Maximum	Minimum	Mean		Date	CFS
1999-00	611.0	.0	7.6	5,480.0	Mar 05	6,150
2000-01	525.0	0.0	10.6	7,710	Jan 11	3,250

M	Data Missing
*	Record incomplete
E	Estimate
N.D.	Not determined
**	Record not Computed
+	Less than 0.05 Acre Feet or less than 0.05 CFS, but greater than 0

RUNOFF – STREAM GAGING STATION PEAK FLOW

COYOTE CREEK *below* Spring Street
STATION NO. F354-R

Season	Daily CFS			Total Runoff (Acre-feet)	Peak Inflow	
	Maximum	Minimum	Mean		Date	CFS
1963-64	1,190.0	+	10.9	7,950.0	Nov 15	N.D.
1964-65	800.0	.3	16.9	12,220.0	Apr 09	3,350
1965-66	1,830.0	1.2	32.5	23,500.0	Dec 29	5,020
1966-67	1,840.0	1.4	37.9	27,450.0	Jan 22	6,880
1967-68	2,350.0	1.6	26.8	19,570.0	Mar 08	6,970
1968-69	4,420.0	3.1	88.8	64,290.0	Jan 20	11,300
1969-70	1,000.0	2.5	23.0	16,680.0	Feb 10	4,600
1970-71	2,320.0	1.4	32.9	23,820.0	Dec 19	6,200
1971-72	1,770.0	*	*	*	Dec 27	6,620
1972-73	2,350.0	3.3	60.4	43,720.0	Nov 14	7,810
1973-74	2,410.0	2.3	38.3	27,700.0	Jan 07	8,670
1974-75	3,130.0	2.3	36.9	26,700.0	Dec 04	14,400
1975-76	1,500.0	2.3	24.5	17,540.0	Feb 06	5,430
1976-77	4,250.0	1.7	37.5	27,000.0	May 08	13,400
1977-78	4,400.0	1.5	128.4	92,940.0	Mar 01	13,700
1978-79	*	*	*	*		*
1979-80	4,380.0	4.0	128.4	91,800.0	Feb 14	19,400
1980-81	2,030.0	4.9	33.7	24,395.0	Mar 01	7,980
1981-82	4,020.0	4.6	56.2	40,818.0	Nov 28	12,200
1982-83	5,100.0	3.4	123.0	89,013.0	Mar 01	19,700
1983-84	2,670.0	5.2	1.5	32,043.0	Oct 01	9,620
1984-85	*	*	*	*		*
1985-86	3,500	N.D.	N.D.	N.D.	Feb 14	15,100
1986-87	2,980.0	4.9	34.1	24,670.0	Jan 04	11,100
1987-88	2,940.0	3.1	46.8	33,943.0	Dec 04	7,630
1988-89	1,360.0	3.0	45.0	32,582.0		N.D.
1989-90	648.0	2.3	18.5	13,410.0	Jan 16	2,980
1990-91	2,250.0	3.4	49.7	35,630.0	Mar 01	6,250
1991-92	3,120.0	.0	61.3	44,518.0	Feb 12	21,000
1992-93	5,030.0	3.8	147.0	106,400.0	Dec 07	13,600
1993-94	*	*	*	*		*
1994-95	*	*	*	*	Mar 11	11,500
1995-96	2,990.0	2.8	41.9	30,380.0	Feb 20	15,500
1996-97	2,120.0	3.5	72.0	52,160.0	Dec 09	10,100
1997-98	3,370.0	1.5	135.0	97,460.0	Feb 07	13,800
1998-99	748.0	3.0	35.7	25,830.0	Nov 08	4,570

M	Data Missing
*	Record incomplete
E	Estimate
N.D.	Not determined
**	Record not Computed
+	Less than 0.05 Acre Feet or less than 0.05 CFS, but greater than 0

RUNOFF – STREAM GAGING STATION PEAK FLOW

COYOTE CREEK *below* Spring Street
STATION NO. F354-R

Season	Daily CFS			Total Runoff (Acre-feet)	Peak Inflow	
	Maximum	Minimum	Mean		Date	CFS
1999-00	1,180.0	3.9	33.7	24,430.0	Feb 23	5,100
2000-01	3,030.0E	3.6E	71.2E	51,510E	Jan 11	15,300

M	Data Missing
*	Record incomplete
E	Estimate
N.D.	Not determined
**	Record not Computed
+	Less than 0.05 Acre Feet or less than 0.05 CFS, but greater than 0

RUNOFF – STREAM GAGING STATION PEAK FLOW

DALTON WASH @ Merced Avenue
STATION NO. F274B-R

Season	Daily CFS			Total Runoff (Acre-feet)	Peak Inflow	
	Maximum	Minimum	Mean		Date	CFS
1940-41	206.0	.0	5.3	3,844.0	Mar 13	674
1941-42	42.0	.0	1.0	727.0	Dec 10	230
1942-43	336.0	.0	4.8	3,500.0	Jan 22	1,230
1943-44	1,620.0	.0	2.2	1,620.0	Feb 22	2,650
1944-45	144.0	.0	1.2	894.0	Nov 11	1,740
1945-46	229.0	.0	2.2	1,610.0	Dec 23	1,450
1946-47	52.0	.0	1.4	984.0	Nov 23	328
1947-48	20.0	.0	.1	96.0	Dec 05	149
1948-49	19.0	.0	.1	97.0	Dec 17	181
1949-50	38.0	.0	.4	306.0	Dec 18	232
1950-51	11.0	.0	.1	64.0	Jan 11	175
1951-52	270.0	.0	2.9	2,090.0	Jan 16	1,070
1952-53	39.0	.0	.4	287.0	Nov 15	549
1953-54	217.0	.0	1.5	1,060.0	Feb 13	1,290
1954-55	88.0	.0	1.0	706.0	Jan 18	668
1955-56	860.0	.0	3.1	2,260.0	Jan 26	2,350
1956-57	165.0	.0	1.4	980.0	Mar 01	1,990
1957-58	303.0	.0	6.5	4,690.0	Mar 16	1,310
1958-59	208.0	.0	3.0	2,130.0	Jan 06	2,700
1959-60	2,260.0	.1	3.1	2,260.0	Jan 10	1,000
1960-61	150.0	.2	3.1	2,220.0	Jan 26	1,468
1961-62	511.0	.1	9.9	7,200.0	Nov 20	4,270
1962-63	403.0	.2	5.7	4,110.0	Mar 16	2,020
1963-64	169.0	.1	3.8	2,750.0	Jan 21	1,530
1964-65	290.0	.1	4.4	3,170.0	Apr 09	2,800
1965-66	571.0	.2	8.8	6,310.0	Nov 22	1,320
1966-67	693.0	.3	14.0	10,140.0	Sep 01	3,970
1967-68	414.0	.3	5.9	4,310.0	Mar 08	3,254
1968-69	3,120.0	.3	47.0	34,300.0	Jan 25	6,550
1969-70	447.0	1.2	68.0	49,270.0	Feb 01	4,775
1970-71	404.0	.8	88.0	63,700.0	Dec 21	2,320
1971-72	599.0	.8	54.0	39,430.0	Dec 24	3,570
1972-73	629.0	.8	121.0	87,820.0	Feb 02	4,240
1973-74	839.0	.8	112.0	81,260.0	Jan 04	2,140
1974-75	550.0	.8	66.8	48,320.0	Dec 04	5,060
1975-76	282.0	.8	74.1	53,640.0	Sep 10	2,190
1976-77	210.0	1.0	14.2	10,280.0	Jan 03	3,240

M	Data Missing
*	Record incomplete
E	Estimate
N.D.	Not determined
**	Record not Computed
+	Less than 0.05 Acre Feet or less than 0.05 CFS, but greater than 0

RUNOFF – STREAM GAGING STATION PEAK FLOW

DALTON WASH @ Merced Avenue
STATION NO. F274B-R

Season	Daily CFS			Total Runoff (Acre-feet)	Peak Inflow	
	Maximum	Minimum	Mean		Date	CFS
1977-78	1,460	.1	101.8	73,594.0	Mar 5	7,590
1978-79	582.0	.1	101.6	73,533.0	Mar 27	5,610
1979-80	2,790.0	+	83.4	59,890.0	Feb 16	10,000
1980-81	379.0	1.0	21.9	15,861.0	Mar 01	1,830
1981-82	568.0	.6	53.4	38,651.0	Mar 14	3,750
1982-83	1,690.0	.0	52.2	37,757.0	Feb 27	6,130
1983-84	347.0	.0	40.2	28,405.0	Dec 25	3,360
1984-85	322.0	.1	57.6	41,683.0	Nov 08	3,500
1985-86	496.0	.1	39.1	28,298.0	Mar 08	5,550
1986-87	347.0	.0	65.7	46,865.0	Oct 02	2,980
1987-88	421.0	.1	47.9	34,807.0	Dec 04	4,984
1988-89	286.0	1.3	60.0	43,310.0	Dec 21	3,408
1989-90	151.0	8.0	56.0	39,890.0	Apr 17	5,390
1990-91	593.0	.0	18.1	13,700.0	Mar 01	3,288
1991-92	529.0	.1	10.0	7,252.0	Feb 12	5,270
1992-93	790.0	.0	37.8	27,370.0	Jan 14	6,120
1993-94	169.0	.1	6.2	4,470.0	Apr 26	3,390
1994-95	1,070.0	.1	19.6	14,160.0	Jan 10	4,790
1995-96	925.0	.2	13.7	9,920.0	Feb 18	6,760
1996-97	370.0	.1	30.2	21,890.0	Dec 09	3,130
1997-98	1,070.0	.1	22.4	16,220.0	Feb 07	6,630
1998-99	127.0	.1	7.2	5,240.0	Nov 28	2,820
1999-00	291.0	.1	28.3	20,520.0	Feb 12	3,040
2000-01	408.0	0.1	22.1	16,030	Jan 11	2,280

M	Data Missing
*	Record incomplete
E	Estimate
N.D.	Not determined
**	Record not Computed
+	Less than 0.05 Acre Feet or less than 0.05 CFS, but greater than 0

RUNOFF – STREAM GAGING STATION PEAK FLOW

EATON WASH *below* Eaton Wash Dam
STATION NO. F271-R

Season	Daily CFS			Total Runoff (Acre-feet)	Peak Inflow	
	Maximum	Minimum	Mean		Date	CFS
1940-41	211.0	0.0	9.4	6,090.6	Feb 20	256
1941-42						
1942-43	663.0	0.0	11.2	6,398.9	Jan 23	1,080
1943-44	161.0	0.0	5.5	1,967.0	Mar 14	268
1944-45	17.1	0.0	0.1	100.8	Feb 02	26
1945-46	43.0	0.0	0.4	265.2	Dec 22	121
1946-47	63.0	0.0	0.7	507.4	Dec 26	86
1947-48	1.7	0.0	0.0	5.6	Dec 04	9
1948-49	0.3	0.0	0.0	1.2	Dec 17	1
1949-50	13.8	0.0	0.1	70.4		
1950-51	2.3	0.0	0.0	7.5		
1951-52	166.0	0.0	2.5	1,827.2		
1952-53						
1953-54	40.0	0.0	0.3	199.1		
1954-55						
1955-56	41.0	0.0	0.2	149.6		
1956-57	2.1	0.0	0.0	12.7		
1957-58	136.0	0.0	2.9	2,035.4	Feb 04	146
1958-59	29.0	0.0	0.2	158.3	Feb 16	164
1959-60						
1960-61						
1961-62	204.0	0.0	1.9	1,299.4		
1962-63	8.6	0.0	0.0	17.1		
1963-64	8.2	0.0	0.0	35.7		
1964-65	35.0	0.0	0.5	328.8		
1965-66	173.0	0.0	5.1	3,650.8		
1966-67	169.0	0.0	2.6	1,907.7		
1967-68						
1968-69						
1969-70						
1970-71						
1971-72						
1972-73						
1973-74						
1974-75	27.0	0.0	0.6	405.4	Mar 15	28
1975-76	27.1	0.0	0.6	424.9	Mar 16	80

M	Data Missing
*	Record incomplete
E	Estimate
N.D.	Not determined
**	Record not Computed
+	Less than 0.05 Acre Feet or less than 0.05 CFS, but greater than 0

RUNOFF – STREAM GAGING STATION PEAK FLOW

EATON WASH *below* Eaton Wash Dam
STATION NO. F271-R

Season	Daily CFS			Total Runoff (Acre-feet)	Peak Inflow	
	Maximum	Minimum	Mean		Date	CFS
1976-77	21.8	0.0	0.4	315.4		22
1977-78	206.0	0.0	5.3	3,456.2	Mar 04	867
1978-79	33.9	0.0	3.4	2,446.0	Nov 21	226
1979-80M						
1980-81	13.0	0.0	0.9	671.0		
1981-82	29.1	0.0	2.1	1,523.7	Apr 05	112
1982-83	804.0	0.0	26.1	18,918.1	Mar 02	1,210
1983-84	44.8	0.0	2.7	1,927.3	Oct 20	43
1984-85	26.6	0.0	1.0	698.2	Jan 05	18
1985-86	42.0	0.0	2.6	1,932.9		
1986-87	NO RECORD					
1987-88	20.9	0.0	0.9	650.6	Apr 25	29
1988-89	26.8	0.0	0.3	344.7		
1989-90	10.0	0.0	1.3	85.3		
1990-91	60.1	0.0	2.1	1,567.9	Mar 22	58
1991-92	274.0	0.0	8.4	6,131.9	Feb 11	642
1992-93	441.0	0.0	20.0	14,503.1	Jan 07	822
1993-94*	15.7	0.0	1.1	691.6		N.D.
1994-95	176.0	0.0	10.3	7,469.2	Jan 10	429
1995-96*	201.0	0.0	2.9	2,094.6	Feb 21	298
1996-97	30.0	0.0	1.7	1,262.9	Jan 27	83
1997-98	252.0	0.0	8.8	6,363.7		N.D.
1998-99	8.8	0.0	0.2	142.1	Jun 02	43
1999-00*	67.0	0.0	1.0	710.8	Feb 24	180
2000-01	32.0	0.0	1.1	795.0	Apr 16	206

M	Data Missing
*	Record incomplete
E	Estimate
N.D.	Not determined
**	Record not Computed
+	Less than 0.05 Acre Feet or less than 0.05 CFS, but greater than 0

RUNOFF – STREAM GAGING STATION PEAK FLOW

EATON WASH @ Loftus Drive
STATION NO. F318-R

Season	Daily CFS			Total Runoff (Acre-feet)	Peak Inflow	
	Maximum	Minimum	Mean		Date	CFS
1956-57	201.0	.0	3.3	2,400.0	Feb 23	1,760
1957-58	368.0	.1	10.3	7,460.0	Feb 19	2,700
1958-59	245.0	.1	3.9	2,850.0	Jan 06	3,480
1959-60	186.0	+	3.3	2,420.0	Jan 12	1,090
1960-61	123.0	.1	2.2	1,590.0	Nov 26	1,200
1961-62	598.0	.1	9.5	6,880.0	Feb 11	1,950
1962-63	311.0	.3	4.1	2,980.0	Feb 09	1,230
1963-64	227.0	.1	4.2	3,050.0	Nov 20	2,360
1964-65	254.0	.2	5.2	3,760.0	Apr 09	2,150
1965-66	605.0	.3	12.4	8,990.0	Dec 29	2,290
1966-67	548.0	.3	12.0	8,670.0	Jan 24	2,100
1967-68	318.0	.3	5.6	4,040.0	Mar 08	2,390
1968-69	1,860.0	.3	M	M		M
1969-70	M	M	M	M		M
1970-71	M	M	M	M		M
1971-72	M	M	M	M		M
1972-73	M	M	M	M		M
1973-74	592.0	.3	6.7	4,870.0	Jan 07	1,530
1974-75	480.0	.5	6.7	4,870.0	Dec 04	3,000
1975-76	275.0	.4	5.6	3,980.0	Sep 11	2,660
1976-77	206.0	.4	5.0	3,650.0	Oct 23	1,820
1977-78	914.0	.4	29.6	21,425.0	Feb 10	5,810
1978-79	335.0	.3	9.9	7,156.0	Feb 21	2,630
1979-80	1,460.0	.1	39.5	27,991.0	Feb 16	5,240
1980-81	203.0	.3	5.4	3,937.0	Mar 19	1,630
1981-82	377.0	.4	7.6	5,453.0	Mar 17	3,060
1982-83	1,570.0	.5	41.1	28,952.0		
1983-84	191.0	.4	4.6	3,307.0	Dec 25	1,930
1984-85	199.0	.4	5.9	4,258.0	Dec 19	2,460
1985-86	313.0	.4	6.8	4,827.0	Jan 31	1,730
1986-87	178.0	.1	2.5	1,782.0	Oct 02	1,400
1987-88	317.0	.0	4.2	3,048.0	Jan 17	4,950
1988-89	172.0	.1	2.9	2,134.0	Dec 15	1,150
1989-90	383.0	.1	3.2	2,289.0	Apr 17	1,310
1990-91	331.0	.0	5.5	3,948.0	Feb 28	1,850
1991-92	757.0	.0	14.2	10,304.0	Feb 12	3,900

M	Data Missing
*	Record incomplete
E	Estimate
N.D.	Not determined
**	Record not Computed
+	Less than 0.05 Acre Feet or less than 0.05 CFS, but greater than 0

RUNOFF – STREAM GAGING STATION PEAK FLOW

EATON WASH @ Loftus Drive
STATION NO. F318-R

Season	Daily CFS			Total Runoff (Acre-feet)	Peak Inflow	
	Maximum	Minimum	Mean		Date	CFS
1992-93	664.0	.0	29.8	21,580.0	Dec 07	5,090
1993-94	159.0	.0	2.9	2,122.0	Mar 24	2,580
1994-95	954.0	.0	20.0	14,500.0	Mar 11	5,330
1995-96	551.0	.1	7.9	5,734.0	Jan 31	5,090
1996-97	236.0	.1	6.4	4,630.0	Jan 12	1,010
1997-98	1,070.0	.1	19.4	14,050.0	Feb 23	4,650
1998-99	136.0	.2	2.8	1,990.0	Nov 28	1,430
1999-00	247.0	.1	5.1	3,720.0	Feb 21	2,490
2000-01	352.0	0.2	0.2	4,680	Jan 11	1,760

M	Data Missing
*	Record incomplete
E	Estimate
N.D.	Not determined
**	Record not Computed
+	Less than 0.05 Acre Feet or less than 0.05 CFS, but greater than 0

RUNOFF – STREAM GAGING STATION PEAK FLOW

FISH CREEK *above* Mouth of Canyon
STATION NO. U7-R

Season	Daily CFS			Total Runoff (Acre-feet)	Peak Inflow	
	Maximum	Minimum	Mean		Date	CFS
1917-18	193.0	.1	4.1	2,960.0	Mar 10	330
1918-19	10.0	.0	.9	648.0	Feb 11	21
1919-20	83.0	+	3.0	2,160.0	Mar 02	255
1920-21	120.0	.0	2.3	1,670.0	Mar 13	286
1921-22	290.0	.1	12.4	8,980.0	Feb 09	505
1922-23	64.0	.1	2.1	1,510.0	Dec 12	186
1923-24	14.0	.0	.5	344.0	Mar 26	58
1924-25	132.0	.0	1.7	1,230.0	Apr 04	N.D.
1925-26	410.0	.1	7.2	5,170.0	Apr 07	N.D.
1926-27	482.0	.4	7.0	5,070.0	Feb 16	945
1927-28	30.0	N.D.	1.2	860.0	Feb 04	97
1928-29	41.0	.0	1.4	1,040.0	Mar 10	71
1929-30	42.0	.0	1.5	1,070.0	Jan 15	72
1930-31	26.0	N.D.	1.2	888.0	Apr 26	70
1931-32	213.0	N.D.	4.9	3,560.0	Dec 28	415
1932-33	167.0	N.D.	1.8	1,340.0	Jan 19	299
1933-34	360.0	N.D.	3.4	2,440.0	Jan 01	640
1934-35	150.0	N.D.	4.2	3,080.0	Apr 08	420
1935-36	80.0	.3	4.5	3,280.0	Feb 02	676
1936-37	142.0	.4	9.3	6,770.0	Dec 30	252
1937-38	752.0	1.0	13.2	9,520.0	Mar 02	2,100
1938-39	50.0	.2	2.4	1,750.0	Dec 19	172
1939-40	43.0	.1	2.2	1,570.0	Jan 08	225
1940-41	255.0	.1	12.9	9,340.0	Mar 04	443
1941-42	23.0	.1	1.4	1,030.0	Dec 10	44
1942-43	874.0	.1	14.8	10,720.0	Jan 23	2,100
1943-44	325.0	.5	5.8	4,200.0	Feb 22	680
1944-45	106.0	.2	3.6	2,580.0	Nov 11	400
1945-46	156.0	.1	3.2	2,310.0	Dec 23	540
1946-47	140.0	.1	4.0	2,910.0	Dec 26	400
1947-48	8.8	N.D.	.7	536.0	Apr 28	28
1948-49	18.0	N.D.	.8	610.0	Jan 20	35
1949-50	37.0	.0	1.2	888.0	Dec 18	157
1950-51	5.6	.0	.3	237.0	Apr 28	16
1951-52	348.0	.0	8.3	6,060.0	Jan 16	1,360
1952-53	18.0	.0	1.1	813.0	Dec 01	252

M	Data Missing
*	Record incomplete
E	Estimate
N.D.	Not determined
**	Record not Computed
+	Less than 0.05 Acre Feet or less than 0.05 CFS, but greater than 0

RUNOFF – STREAM GAGING STATION PEAK FLOW

FISH CREEK *above* Mouth of Canyon
STATION NO. U7-R

Season	Daily CFS			Total Runoff (Acre-feet)	Peak Inflow	
	Maximum	Minimum	Mean		Date	CFS
1953-54	110.0	.0	2.1	1,510.0	Jan 25	376
1954-55	15.0	.0	.8	567.0	Jan 18	39
1955-56	155.0	.0	1.5	1,100.0	Jan 26	544
1956-57	33.0	.0	.9	674.0	Jan 13	108
1957-58	212.0	.0	7.8	5,680.0	Apr 03	608
1958-59	200.0	.1	2.2	1,590.0	Dec 06	2000E
1959-60	16.0	.0	1.1	794.0	Apr 27	84
1960-61	23.0	.0	.6	443.0	Nov 12	230
1961-62	472.0	.0	6.2	4,480.0	Feb 11	770
1962-63	71.0	.0	1.3	922.0	Feb 09	346
1963-64	48.0	.0	.9	673.0	Jan 21	178
1964-65	48.0	.0	1.3	930.0	Apr 09	163
1965-66	523.0	.0	8.6	6,200.0	Dec 29	1,670
1966-67	688.0	.6	13.5	9,740.0	Dec 06	2,250
1967-68	32.0	.4	2.3	1,640.0	Nov 19	282
1968-69	5,540.0	.7	55.2	39,980.0	Jan 25	13,000
1969-70	99.0	.8	4.2	3,010.0	Feb 28	898
1970-71	93.0	.6	3.3	2,400.0	Nov 29	259
1971-72	23.0	.1	1.0	742.0	Dec 24	62
1972-73	480.0	.2	7.4	5,390.0	Feb 11	1,600
1973-74	234.0	.4	4.4	3,210.0	Jan 07	376
1974-75	30.0	.2	2.5	909.0	Dec 04	56
1975-76	41.0	.1	1.5	1,050.0	Mar 01	143
1976-77	45.0	.0	1.0	760.0		N.D.
1977-78	386.0	.1	15.5	11,242.0	Feb 10	1,340
1978-79	35.1	.2	4.4	3,760.0	Dec 05	78
1979-80	448.0	.4	.5	10,806.0	Feb 16	1,590
1980-81	43.5	.2	1.7	1,264.0	Jan 29	190
1981-82	12.6	.1	2.0	1,424.0	Jan 20	26
1982-83	575.0	.4	18.7	13,552.0	Mar 01	1,230
1983-84	35.1	.0	2.0	1,487.0	Dec 25	108
1984-85	29.4	.1	17.6	1,100.0		N.D.
1985-86	*	*	*	*		*
1986-87	14.2	.0	1.6	1,156.0		N.D.
1987-88	48.9	.0	1.5	1,082.0	Jan 17	115
1988-89	80.7	.0	21.1	1,219.0	Feb 04	226

M	Data Missing
*	Record incomplete
E	Estimate
N.D.	Not determined
**	Record not Computed
+	Less than 0.05 Acre Feet or less than 0.05 CFS, but greater than 0

RUNOFF – STREAM GAGING STATION PEAK FLOW

FISH CREEK *above* Mouth of Canyon
STATION NO. U7-R

Season	Daily CFS			Total Runoff (Acre-feet)	Peak Inflow	
	Maximum	Minimum	Mean		Date	CFS
1989-90	35.4	.0	.6	466.0	Feb 16	176
1990-91	87.4	.0	2.5	1,837.0	Mar 01	429
1991-92	318.0	.0	10.3	7,481.0	Feb 12	1,030
1992-93	422.0	.3	20.2	14,640.0	Feb 19	2,370
1993-94	13.3	.0	1.2	843.0	Feb 20	31
1994-95	248.0	.2	10.5	7,620.0	Mar 05	768
1995-96	295.0	.1	5.2	3,797.0	Feb 21	540
1996-97	125.0	.2	4.9	3,520.0	Dec 22	339
1997-98	500.0	.1	10.9	7,860.0	Mar 03	35
1998-99	1.9	.2	1.3	935.0	Mar 30	2
1999-00	17.0	.6	1.7	1,220.0	May 03	4
2000-01	25.0	0.0	1.2	881.0	Apr 16	98

M	Data Missing
*	Record incomplete
E	Estimate
N.D.	Not determined
**	Record not Computed
+	Less than 0.05 Acre Feet or less than 0.05 CFS, but greater than 0

RUNOFF – STREAM GAGING STATION PEAK FLOW

LEAKAGE @ Toe of Cogswell Dam
STATION NO. F251-R

Season	Daily CFS			Total Runoff (Acre-feet)	Peak Inflow	
	Maximum	Minimum	Mean		Date	CFS
1934-35	20.0	0.0	4.0	2,890.3	May 01	20
1935-36	41.0	0.1	9.3	6,728.3	Feb 17	41
1936-37						
1937-38						
1938-39						
1939-40						
1940-41						
1941-42						
1942-43						
1943-44						
1944-45						
1945-46						
1946-47						
1947-48						
1948-49						
1949-50						
1950-51						
1951-52						
1952-53						
1953-54						
1954-55						
1955-56						
1956-57						
1957-58						
1958-59						
1959-60						
1960-61						
1961-62						
1962-63						
1963-64						
1964-65						
1965-66						
1966-67						
1967-68						
1968-69						
1969-70						

M	Data Missing
*	Record incomplete
E	Estimate
N.D.	Not determined
**	Record not Computed
+	Less than 0.05 Acre Feet or less than 0.05 CFS, but greater than 0

RUNOFF – STREAM GAGING STATION PEAK FLOW

LEAKAGE @ Toe of Cogswell Dam
STATION NO. F251-R

Season	Daily CFS			Total Runoff (Acre-feet)	Peak Inflow	
	Maximum	Minimum	Mean		Date	CFS
1970-71						
1971-72						
1972-73						
1973-74						
1974-75	5.3	1.8	3.6	2,614.0		6
1975-76	3.9	1.8	3.2	2,326.4	Feb 09	4
1976-77	4.5	1.8	3.1	2,228.2		
1977-78	16.8	2.2	0.2	4,130.8	Feb 10	58
1978-79	6.8	2.5	0.1	2,800.7	Mar 27	7
1979-80						
1980-81	5.6	0.0	1.9	1,363.8	Oct 01	6
1981-82	10.4	0.0	5.1	3,682.7		11
1982-83	13.9	4.2	0.3	5,635.0	Mar 02	14
1983-84	8.1	1.5	0.2	3,383.0	Oct 01	9
1984-85	5.2	1.0	3.4	2,432.7	Dec 28	6
1985-86	5.4	2.9	4.0	2,877.2	Feb 15	6
1986-87	3.8	2.2	31.8	1,927.3	Oct 01	4
1987-88	4.4	1.8	35.5	2,142.0	May 23	5
1988-89	2.7	1.7	2.0	1,449.1	Oct 01	3
1989-90	2.8	1.0	1.9	1,344.2	May 19	3
1990-91	4.7	0.0	0.7	510.1	Mar 01	5
1991-92	5.0	0.0	0.8	569.7	Apr 08	5
1992-93	22.1	0.2	11.0	7,996.2	Jan 18	23
1993-94	11.3	0.2	3.1	2,243.3	Oct 01	12
1994-95	4.0	0.0	0.7	502.2	Aug 15	12
1995-96	2.2	0.0	0.1	66.1	Feb 21	6
1996-97	13.0	0.0	5.5	4,006.4	Apr 21	13
1997-98	31.0	2.4	16.1	11,654.7	Feb 23	39
1998-99	22.0	1.3	9.5	6,897.1	Oct 01	22
1999-00	12.0	0.0	4.3	3,102.2	Apr 18	12
2000-01	14.0	1.8	7.6	5,520.0	Apr 07	14

M	Data Missing
*	Record incomplete
E	Estimate
N.D.	Not determined
**	Record not Computed
+	Less than 0.05 Acre Feet or less than 0.05 CFS, but greater than 0

RUNOFF – STREAM GAGING STATION PEAK FLOW

LITTLE ROCK CREEK *above* Little Rock Dam
STATION NO. L1-R

Season	Daily CFS			Total Runoff (Acre-feet)	Peak Inflow	
	Maximum	Minimum	Mean		Date	CFS
1930-31	195.0	.0	5.0	3,610.0	Apr 26	430
1931-32	830.0	.0	*	16730*	Feb 08	2,200
1932-33	56.0	.0	5.8	4,180.0	Mar 09	66
1933-34	455.0	.0	5.2	3,770.0		N.D.
1934-35	716.0	.0	24.4	17,640.0	Feb 05	925
1935-36	127.0	.0	4.6	3,320.0	Feb 23	261
1936-37	679.0	.0	30.3	21,950.0	Feb 06	1,550
1937-38	N.D.	.0	N.D.	N.D.	Mar 02	17,000
1938-39	NO RECORD					
1939-40	183.0	.0	9.6	7,000.0	Jan 08	555
1940-41	1,730.0	.0	71.3	51,620.0	Feb 20	2,240
1941-42	55.0	+	7.1	5,140.0	Apr 14	92
1942-43	2730E	.0	49.5	35,870.0	Jan 23	5,700
1943-44	736.0	.8	49.6	35,940.0	Feb 22	902
1944-45	323.0	.1	12.8	9,250.0	Nov 11	1,080
1945-46	604.0	.0	16.7	12,150.0	Dec 21	1,100
1946-47	1,740.0	.0	21.9	15,840.0	Dec 26	3,180
1947-48	62.0	.0	3.4	2,450.0	Apr 29	122
1948-49	33.0	.0	4.4	3,170.0	Apr 14	37
1949-50	114.0	.0	3.4	2,470.0	Feb 06	212
1950-51	4.7	.0	.6	432.0	May 04	5
1951-52	311.0	.0	31.6	22,890.0	Dec 30	502
1952-53	33.0	.0	4.2	3,020.0	Jan 09	36
1953-54	328.0	.0	11.6	8,430.0	Jan 25	655
1954-55	116.0	+	10.1	7,310.0	Nov 11	236
1955-56	424.0	.0	7.5	5,470.0	Jan 26	1,050
1956-57	399.0	.0	6.3	4,560.0	Jan 13	1,040
1957-58	521.0	.0	40.7	29,500.0	Dec 15	1,070
1958-59	163.0	.0	5.7	4,150.0	Feb 16	598
1959-60	15.0	.0	2.4	1,750.0	Jan 26	17
1960-61	25.0	.0	1.8	1,290.0	Nov 06	37
1961-62	2,060.0	.0	25.8	18,640.0	Feb 11	3,180
1962-63	112.0	.0	3.0	2,200.0	Feb 10	314
1963-64	38.0	.0	3.8	2,800.0	Apr 01	49
1964-65	115.0	.0	7.1	5,150.0	Apr 19	155
1965-66	1,700.0	.0	33.9	24,500.0	Dec 29	5,240

M	Data Missing
*	Record incomplete
E	Estimate
N.D.	Not determined
**	Record not Computed
+	Less than 0.05 Acre Feet or less than 0.05 CFS, but greater than 0

RUNOFF – STREAM GAGING STATION PEAK FLOW

LITTLE ROCK CREEK *above* Little Rock Dam
STATION NO. L1-R

Season	Daily CFS			Total Runoff (Acre-feet)	Peak Inflow	
	Maximum	Minimum	Mean		Date	CFS
1966-67	1,330.0	.0	29.2	21,230.0	Dec 06	1,970
1967-68	264.0	+	11.6	8,390.0	Nov 21	444
1968-69	1,810.0	+	57.2	41,430.0	Jan 25	5,900
1969-70	175.0	.0	9.5	6,850.0	Feb 10	287
1970-71	453.0	.0	10.6	7,700.0	Nov 29	1,490
1971-72	382.0	.0	6.0	4,320.0	Dec 24	801
1972-73	556.0	.0	16.1	11,680.0	Feb 11	1,880
1973-74	70.0	.0	10.4	7,540.0	Mar 02	87
1974-75	124.0	.0	7.8	5,640.0	Mar 08	230
1975-76	270.0	.0	7.6	5,530.0	Feb 08	643
1976-77	74.0	.0	7.3	5,296.0	May 08	181
1977-78	1,770	0	96.4	69,843	Feb 10	3,735
1978-79	249.0	.5	25.6	18,562.0	Mar 27	367
1979-80	1,705.0	.0	45.8	32,580.0	Feb 19	3,998
1980-81	43.8	.0	5.9	4,726.0	Mar 20	59
1981-82	575.0	.0	18.3	13,243.0	Apr 11	1,132
1982-83	2,413.0	.0	66.5	48,136.0	Mar 01	3,482
1983-84	244.0	.0	7.1	5,124.0	Dec 25	539
1984-85	36.2	.0	8.0	5,764.0	Dec 27	45
1985-86	515.0	.0	17.3	12,510.0	Jan 30	1,162
1986-87	64.1	.0	2.5	1,818.0	Mar 06	87
1987-88	205.0	.0	25.1	18,286.0		N.D.
1988-89	47.0	.0	6.3	4,701.0	Feb 09	61
1989-90	*	*	*	*	Jan 23	41
1990-91	369.0	.0	8.6	8,094.0	Mar 01	839
1991-92	*	*	*	*		*
1992-93	*	*	*	*		*
1993-94	46.9	.0	N.D.	*		N.D.
1994-95	795.0	.0	44.9	32,480.0	Jan 10	2,000
1995-96	638.0	.0	8.9	6,474.0	Feb 21	1,100
1996-97	207.0	.0	7.3	5,260.0	Jan 26	264
1997-98	1,610.0	.0	52.3	37,890.0	Feb 23	3,470
1998-99	23.0	.0	3.8	2,720.0	Feb 10	27
1999-00	168.0	.0	6.9	5,000.0	Feb 23	519
2000-01	154.0	0.0	14.9	10,760	Mar 06	219

M	Data Missing
*	Record incomplete
E	Estimate
N.D.	Not determined
**	Record not Computed
+	Less than 0.05 Acre Feet or less than 0.05 CFS, but greater than 0

RUNOFF – STREAM GAGING STATION PEAK FLOW

LIVE OAK CREEK *below* Live Oak Dam
STATION NO. F356-R

Season	Daily CFS			Total Runoff (Acre-feet)	Peak Inflow	
	Maximum	Minimum	Mean		Date	CFS
1963-64						
1964-65	2.8	0.0	0.0	13.9	Jun 24	78
1965-66	6.1	0.0	0.3	209.4	Mar 01	7
1966-67	44.0	0.0	0.9	670.6	Dec 06	194
1967-68						
1968-69						
1969-70						
1970-71						
1971-72						
1972-73						
1973-74						
1974-75	5.1	0.0	0.1	77.8	Apr 08	6
1975-76	4.8	0.0	0.0	27.0	Apr 26	6
1976-77	2.3	0.0	0.0	30.9	Aug 17	5
1977-78	73.0	0.0	2.1	1,517.2	Mar 04	120
1978-79	4.4	0.0	0.9	655.5	Mar 30	5
1979-80	84.2	0.0	2.6	1,907.3	Feb 17	105
1980-81	2.8	0.0	0.3	218.6	Mar 03	4
1981-82	20.3	0.0	0.6	416.5	Mar 18	21
1982-83	45.0	0.0	0.0	1,779.6		
1983-84	2.3	0.0	0.6	449.7	Dec 05	3
1984-85	3.6	0.0	0.2	162.8		
1985-86	1.9	0.0	0.3	195.6	Mar 25	2
1986-87	1.0	0.0	0.0	37.5		
1987-88	6.4	0.0	0.0	69.2		
1988-89	5.3	0.0	0.1	93.6	Feb 14	8
1989-90	2.0	0.0	0.1	41.7	May 28	3
1990-91	4.3	0.0	0.3	200.3	Mar 04	5
1991-92	17.7	0.0	0.4	272.9	Feb 13	36
1992-93	48.2	0.0	2.4	1,705.8	Feb 22	80
1993-94	5.7	0.0	0.3	199.5	May 10	7
1994-95	29.8	0.0	1.5	1,058.4	Mar 06	103
1995-96	23.8	0.0	0.5	393.1	Feb 21	83
1996-97	6.6	0.0	0.5	349.1	Dec 17	25
1997-98	51*	0*	1.07*	773.87*	Feb 24	65
1998-99	9.0	0.0	0.1	104.1	Dec 08	30

M	Data Missing
*	Record incomplete
E	Estimate
N.D.	Not determined
**	Record not Computed
+	Less than 0.05 Acre Feet or less than 0.05 CFS, but greater than 0

RUNOFF – STREAM GAGING STATION PEAK FLOW

LIVE OAK CREEK *below* Live Oak Dam
STATION NO. F356-R

Season	Daily CFS			Total Runoff (Acre-feet)	Peak Inflow	
	Maximum	Minimum	Mean		Date	CFS
1999-00	1.1*	0*	0.11*	77.85*	Jun 20	25
2000-01	20.0	0.0	0.2	120.0	Jul 10	61

M	Data Missing
*	Record incomplete
E	Estimate
N.D.	Not determined
**	Record not Computed
+	Less than 0.05 Acre Feet or less than 0.05 CFS, but greater than 0

RUNOFF – STREAM GAGING STATION PEAK FLOW

LOS ANGELES RIVER *above* Arroyo Seco
STATION NO. F57C-R

Season	Daily CFS			Total Runoff (Acre-feet)	Peak Inflow	
	Maximum	Minimum	Mean		Date	CFS
1930-31	927.0	.0	5.5	3,950.0	Feb 04	4,540
1931-32	2,520.0	.0	21.0	15,240.0	Feb 08	3023
1932-33	2,330.0	.0	14.7	10,640.0	Jan 19	5778
1933-34	5,990.0	.0	41.2	29,810.0	Jan 01	22,000
1934-35	568.0	.1	17.3	12,550.0	Apr 08	2400E
1935-36	322.0	.4	7.9	5,770.0	Mar 30	2,540
1936-37	1,670.0	.4	33.8	24,470.0	Feb 06	2410E
1937-38	27,900.0	.6	183.0	132,600.0	Mar 02	68000E
1938-39	1,950.0	3.8	58.5	42,360.0	Jan 05	3,710
1939-40	2,070.0	6.0	54.5	39,590.0	Jan 08	8,900
1940-41	6,700.0	4.2	228.0	165,000.0	Feb 20	11,900
1941-42	1,170.0	22.0	75.7	54,800.0	Dec 10	5,260
1942-43	7,120.0	15.0	172.0	124,400.0	Jan 23	23,900
1943-44	8,020.0	25.0	151.0	109,800.0	Feb 22	14,600
1944-45	1,160.0	6.5	51.1	36,990.0	Feb 02	4,900
1945-46	1,880.0	3.4	49.6	35,880.0	Dec 22	5,240
1946-47	896.0	1.6	43.3	31,330.0	Dec 25	5,320
1947-48	498.0	3.6	20.5	14,890.0	Mar 24	4,900
1948-49	451.0	4.2	24.3	17,600.0	Dec 17	1,530
1949-50	804.0	.3	14.9	10,760.0	Feb 06	2,840
1950-51	487.0	.5	10.8	7,840.0	Jan 11	3,600
1951-52	8,130.0	.5	149.0	108,000.0	Jan 16	25,300
1952-53	1,370.0	.6	25.5	18,480.0	Dec 20	7,270
1953-54	2,570.0	.2	29.0	21,000.0	Feb 13	9,580
1954-55	1,510.0	.2	25.2	18,270.0	Jan 18	6,850
1955-56	7,290.0	.6	49.4	35,890.0	Jan 26	15,300
1956-57	2,390.0	.2	34.4	24,890.0	Feb 23	22,200
1957-58	4,650.0	.4	126.0	91,020.0	Feb 19	19,700
1958-59	3,790.0	.2	27.6	20,230.0	Jan 06	17,200
1959-60	1,420.0	+	23.3	16,910.0	Jan 12	8,960
1960-61	1,690.0	+	16.6	12,000.0	Nov 05	7,890
1961-62	8,510.0	+	120.0	86,910.0	Feb 12	32,500
1962-63	3,750.0	+	32.4	23,440.0	Feb 09	18,100
1963-64	1,950.0	+	27.9	20,320.0	Jan 22	12,200
1964-65	2,880.0	+	49.1	35,580.0	Apr 09	12,500
1965-66	12,600.0	.1	149.0	107,500.0	Dec 29	32,000

M	Data Missing
*	Record incomplete
E	Estimate
N.D.	Not determined
**	Record not Computed
+	Less than 0.05 Acre Feet or less than 0.05 CFS, but greater than 0

RUNOFF – STREAM GAGING STATION PEAK FLOW

LOS ANGELES RIVER *above* Arroyo Seco
STATION NO. F57C-R

Season	Daily CFS			Total Runoff (Acre-feet)	Peak Inflow	
	Maximum	Minimum	Mean		Date	CFS
1966-67	7,720.0	.4	115.0	82,210.0	Nov 07	32,100
1967-68	4,780.0	3.4	82.2	59,710.0	Mar 08	30,900
1968-69	23,400.0	4.0	425.0	307,400.0	Jan 25	41,800
1969-70	2,760.0	6.9	65.6	47,520.0	Mar 04	17,000
1970-71	12,900.0	7.4	129.0	93,310.0	Nov 29	41,500
1971-72	4,830.0	5.4	64.3	46,690.0	Dec 27	15,900
1972-73	9,190.0	6.7	157.0	114,000.0	Jan 18	28,230
1973-74	12,480.0	5.8	123.0	88,900.0	Jan 07	24,540
1974-75	5,750.0	4.2	88.6	64,120.0	Dec 04	27,570
1975-76	3,230.0	2.7	54.7	39,720.0	Feb 09	13,900
1976-77	4,710.0	1.6	91.2	66,020.0	Jan 03	23,300
1977-78	22,700.0	5.4	506.5	366,663.0	Feb 10	52,700
1978-79	6,240.0	18.8	192.0	139,101.0	Mar 27	25,800
1979-80	16,800.0	11.0	428.6	303,340.0	Feb 16	52,200
1980-81	3,340.0	14.9	104.9	75,932.0	Jan 29	28,200
1981-82	5,870.0	11.0	137.4	99,441.0	Mar 14	22,800
1982-83	25,100.0	22.2	560.4	405,695.0	Jan 27	44,500
1983-84	4,030.0	23.0	96.2	69,861.0	Dec 25	17,000
1984-85	3,380.0	30.0	98.3	71,160.0	Dec 19	9,270
1985-86	5,110.0	59.0	214.2	155,103.0	Jan 31	25,400
1986-87	2,090.0	70.2	101.5	73,480.0	Nov 17	13,000
1987-88	NO RECORD					
1988-89	NO RECORD					
1989-90	NO RECORD					
1990-91	NO RECORD					
1991-92	20,200.0	3.7	463.0	320,800.0	Feb 12	45,700
1992-93	*	*	*	*		*
1993-94	*	*	*	*		*
1994-95	19,900.0	114.0			Mar 10	44,900
1995-96	*	*	*	*		*
1996-97	3,760.0	86.0	213.0	154,100.0	Dec 09	17,900
1997-98	13,900.0	88.0	479.0	346,700.0	Feb 23	37,800
1998-99	1,520.0	85.0	159.0	113,900.0	Jan 31	11,600
1999-00	4,370.0	82.0	196.0	142,200.0	Feb 23	25,200
2000-01	8,010.0	102.0	261.0	188,900	Jan 11	37,500

M	Data Missing
*	Record incomplete
E	Estimate
N.D.	Not determined
**	Record not Computed
+	Less than 0.05 Acre Feet or less than 0.05 CFS, but greater than 0

RUNOFF – STREAM GAGING STATION PEAK FLOW

LOS ANGELES RIVER *below* Wardlow River Road
STATION NO. F319-R

Season	Daily CFS			Total Runoff (Acre-feet)	Peak Inflow	
	Maximum	Minimum	Mean		Date	CFS
1928-29	N.D.	N.D.	N.D.	N.D.	Mar 10	2,870
1929-30	1,270.0	.9	17.0	12,310.0	Mar 15	1,670
1930-31	1,390.0	.0	19.9	14,400.0	Feb 03	3,700
1931-32	7,130.0	.8	70.2	50,960.0	Feb 09	8,380
1932-33	3,310.0	.3	31.6	22,890.0	Jan 19	8,710
1933-34	19,900.0	.0	93.7	67,860.0	Jan 01	37,500
1934-35	2,930.0	1.6	55.9	40,470.0	Apr 08	11,000
1935-36	1,630.0	2.3	28.3	20,470.0	Feb 12	10,400
1936-37	6,800.0	3.3	126.0	91,110.0	Feb 14	20,500
1937-38	50,000.0	1.0	564.0	408,000.0	Mar 02	99000E
1938-39	6,220.0	3.5	114.0	82,750.0	Sep 25	17,300
1939-40	2830E	15.0	90.8	65,930.0	Feb 02	8,440
1940-41	11,120.0	18.0	510.0	369,500.0	Mar 04	18,170
1941-42	3,180.0	31.0	129.0	93,390.0	Dec 10	10,800
1942-43	18,100.0	28.0	366.0	264,900.0	Jan 23	37,900
1943-44	17,190.0	38.0	299.0	217,400.0	Feb 22	34,000
1944-45	3,020.0	33.0	138.0	100,200.0	Nov 12	11,600
1945-46	6,440.0	30.0	127.0	91,790.0	Dec 22	12,800
1946-47	5,750.0	18.0	146.0	106,000.0	Dec 26	18,810
1947-48	1,540.0	19.0	72.8	52,820.0	Mar 24	9,310
1948-49	1,790.0	13.0	61.3	44,350.0	Dec 17	5,520
1949-50	2,360.0	6.3	58.3	42,180.0	Feb 06	9,090
1950-51	1,610.0	5.6	50.6	36,600.0	Jan 29	9,040
1951-52	16,310.0	3.8	292.0	212,200.0	Jan 16	47,800
1952-53	2,932.0	1.9	61.4	44,490.0	Nov 15	21,100
1953-54	8,120.0	2.5	97.8	70,790.0	Feb 13	34,760
1954-55	4,180.0	2.2	83.0	60,120.0	Jan 18	17,750
1955-56	12,700.0	7.0	133.0	96,810.0	Jan 26	40,500
1956-57	4,550.0	5.5	67.3	48,710.0	Feb 23	23,000
1957-58	10,400.0	6.4	264.0	191,200.0	Feb 19	43,800
1958-59	6,340.0	7.2	68.2	49,390.0	Jan 06	31,000
1959-60	3,420.0	3.7	67.6	49,100.0	Jan 12	21,700
1960-61	2,860.0	1.3	44.2	32,000.0	Jan 26	9,450
1961-62	14,800.0	.6	245.0	177,400.0	Feb 12	42,200
1962-63	5,480.0	1.2	75.6	54,700.0	Feb 09	31,400
1963-64	4,150.0	5.3	64.8	47,020.0	Jan 22	16,000

M	Data Missing
*	Record incomplete
E	Estimate
N.D.	Not determined
**	Record not Computed
+	Less than 0.05 Acre Feet or less than 0.05 CFS, but greater than 0

RUNOFF – STREAM GAGING STATION PEAK FLOW

LOS ANGELES RIVER *below* Wardlow River Road
STATION NO. F319-R

Season	Daily CFS			Total Runoff (Acre-feet)	Peak Inflow	
	Maximum	Minimum	Mean		Date	CFS
1964-65	5,150.0	4.1	106.0	76,680.0	Apr 09	30,100
1965-66	22,500.0	3.0	342.0	247,900.0	Dec 29	61,500
1966-67	12,400.0	9.9	237.0	171,900.0	Nov 07	43,700
1967-68	13,600.0	18.0	173.0	125,800.0	Mar 08	48,900
1968-69	55,000.0	16.0	1,120.0	787,000.0	Jan 25	102,000
1969-70	5,300.0	22.0	128.0	92,070.0	Feb 28	5,300
1970-71	20,600.0	20.0	201*	145300*	Nov 29	65,100
1971-72	8,550.0	17.0	106.0	77,560.0	Dec 24	28,700
1972-73	16,170.0	20.0	253.0	183,300.0	Feb 11	50,800
1973-74	17,200.0	17.0	190.0	137,800.0	Jan 07	42,800
1974-75	11,200.0	13.0	159.0	115,000.0	Dec 04	64,470
1975-76	4,660.0	11.5	100.0	72,670.0	Feb 09	16,025
1976-77	7,130.0	5.3	140.4	101,700.0	Jan 03	29,528
1977-78	42,323.0	11.0	923.0	668,337.0	Feb 10	94820
1978-79	13,000.0	33.0	379.2	274,500.0	Mar 27	50,900
1979-80	33,437.0	39.0	750	627,852.0	Feb 16	128,700
1980-81	6,550.0	27.0	173.2	125,893.0	Jan 29	33,800
1981-82	11,400.0	32.0	246.2	178,227.0	Apr 01	26,800
1982-83	52,000.0	38.0	1,047.0	758,465.0	Mar 01	81,800
1983-84	6,530.0	41.0	166.8	120,740.0	Dec 25	22,300
1984-85	6,370.0	34.0	1,970.0	118,440.0	Dec 19	23,500
1985-86	13,600.0	51.4	338.0	244,741.0	Feb 15	54,400
1986-87	4,050.0	92.6	164.0	118,510.0	Nov 18	15,500
1987-88	8,230.0	85.0	242.8	176,277.0	Dec 04	48,900
1988-89	3,740.0	101.0	195.0	141,249.0	Dec 16	16,900
1989-90	12,100.0	115.0	196.0	141,594.0	Feb 17	25,600
1990-91	10,700.0	108.0	310.0	224,410.0	Feb 28	42,400
1991-92	23,800.0	110.0	668.0	484,849.0	Feb 12	66,400
1992-93	35,000.0	123.0	1,549.0	1,122,000.0	Feb 08	86,000
1993-94	4,090.0	113.0	259.0	187,400.0	Mar 24	19,700
1994-95	43,900.0	92.5	1,186.0	740,000.0	Mar 11	112,000
1995-96	15,100.0	96.8	261.0	189,200.0	Feb 21	35,400
1996-97	7,390.0	91.0	299.0	216,300.0	Dec 09	28,600
1997-98	*	*	*	*		*
1998-99	M	*	*	*		M
1999-00	477.0	164.0	203.0	24,560.0	Aug 23	1,140

M	Data Missing
*	Record incomplete
E	Estimate
N.D.	Not determined
**	Record not Computed
+	Less than 0.05 Acre Feet or less than 0.05 CFS, but greater than 0

RUNOFF – STREAM GAGING STATION PEAK FLOW

LOS ANGELES RIVER *below* Wardlow River Road
STATION NO. F319-R

Season	Daily CFS			Total Runoff (Acre-feet)	Peak Inflow	
	Maximum	Minimum	Mean		Date	CFS
2000-01	12,700.0	116.0	405.0	293,500	Jan 11	54,400

M	Data Missing
*	Record incomplete
E	Estimate
N.D.	Not determined
**	Record not Computed
+	Less than 0.05 Acre Feet or less than 0.05 CFS, but greater than 0

RUNOFF – STREAM GAGING STATION PEAK FLOW

LOS ANGELES RIVER *below* Firestone Blvd.
STATION NO. F34D-R

Season	Daily CFS			Total Runoff (Acre-feet)	Peak Inflow	
	Maximum	Minimum	Mean		Date	CFS
1927- 28	*	.0	*	6990*	Feb 04	1120*
1928- 29	775.0	.0	13.6	9,830.0	Nov 14	2,010
1929- 30	813.0	.0	13.4	9,730.0	Mar 15	2,210
1930- 31	1,560.0	1.4	18.6	13,450.0	Feb 04	4,360
1931- 32	2,650.0	.4	35.3	25,620.0	Feb 08	4,780
1932- 33	2,900.0	.0	23.5	17,020.0	Jan 19	7,070
1933- 34	8,550.0	.0	52.9	38,330.0	Jan 01	29,400
1934- 35	1,430.0	.0	40.3	29,170.0	Jan 05	10,400
1935- 36	1,040.0	.0	20.5	14,920.0	Feb 12	5,730
1936- 37	3,460.0	.0	67.2	48,630.0	Dec 30	10000E
1937- 38	40,000.0	.0	278.0	201,300.0	Mar 02	79,000
1938- 39	5090E	.0	108.0	78,440.0	Sep 25	10,800
1939- 40	2,410.0	14E	80.5	58,420.0	Jan 08	7,610
1940- 41	7,580.0	10.0	345.0	249,500.0	Feb 20	14,800
1941- 42	2,030.0	27.0	97.8	70,820.0	Dec 10	8,210
1942- 43	10,700.0	18.0	268.0	193,700.0	Jan 23	27,500
1943- 44	13,000.0	38.0	249.0	180,900.0	Feb 22	24,800
1944- 45	1,980.0	16.0	91.0	65,900.0	Feb 02	6,970
1945- 46	4,000.0	8.4	95.8	69,310.0	Dec 22	12,500
1946- 47	2,760.0	14.0	99.7	72,180.0	Dec 25	14,900
1947- 48	1,280.0	10.0	52.8	38,350.0	Mar 24	8,980
1948- 49	1,130.0	11.0	49.1	35,550.0	Dec 17	5,300
1949- 50	1,770.0	8.5	43.9	31,760.0	Feb 06	8,480
1950- 51	898.0	7.5	35.3	25,560.0	Jan 11	5,840
1951- 52	12,000.0	1.8	249.0	180,500.0	Jan 16	32,900
1952- 53	2,000.0	1.4	57.1	41,380.0	Nov 15	14,100
1953- 54	4,190.0	1.2	70.9	51,330.0	Feb 13	19,500
1954- 55	2,470.0	6.2	54.3	39,340.0	Jan 18	13,700
1955- 56	12,000.0	8.2	91.5	66,440.0	Jan 26	28,900
1956- 57	3,960.0	3.8	53.2	38,500.0	Feb 23	24,600
1957- 58	6,290.0	4.3	191.0	138,400.0	Feb 19	34,100
1958- 59	4,660.0	5.9	51.4	37,210.0	Jan 06	24,200
1959- 60	2,090.0	4.0	43.6	31,610.0	Jan 12	10,700
1960- 61	2,230.0	4.5	32.6	23,600.0	Nov 05	7,810
1961- 62	9,630.0	3.8	170.0	123,300.0	Feb 12	28,400
1962- 63	4,080.0	4.3	56.2	40,690.0	Feb 09	19,300

M	Data Missing
*	Record incomplete
E	Estimate
N.D.	Not determined
**	Record not Computed
+	Less than 0.05 Acre Feet or less than 0.05 CFS, but greater than 0

RUNOFF – STREAM GAGING STATION PEAK FLOW

LOS ANGELES RIVER *below* Firestone Blvd.
STATION NO. F34D-R

Season	Daily CFS			Total Runoff (Acre-feet)	Peak Inflow	
	Maximum	Minimum	Mean		Date	CFS
1963- 64	2,810.0	2.6	49.6	36,030.0	Jan 21	11,400
1964- 65	3,380.0	4.3	66.5	48,110.0	Apr 09	18,700
1965- 66	15,700.0	4.3	209.0	151,200.0	Dec 29	37,000
1966- 67	10,000.0	6.0	159.0	114,800.0	Nov 07	37,100
1967- 68	9,410.0	13.0	116.0	84,240.0	Mar 08	37,400
1968- 69	31,800.0	12.0	541.0	391,800.0	Jan 25	58,000
1969- 70	4,250.0	13.0	90.4	65,440.0	Feb 28	20,900
1970- 71	16,700.0	11.0	162.0	117,300.0	Nov 29	49,800
1971- 72	6,980.0	14.0	86.6	62,890.0	Dec 24	27,400
1972- 73	14,470.0	13.0	221.0	160,300.0	Jan 18	49,020
1973- 74	15,690.0	10.6	157.0	113,600.0	Jan 07	32,300
1974- 75	8,480.0	9.0	119.0	86,470.0	Dec 04	53,950
1975- 76	3,390.0	6.0	68.0	48,400.0	Sep 10	8160E
1976- 77	5,550.0	5.4	115.0	83,300.0	Jan 03	30,900
1977- 78	31,900.0	7.8	739.9	535,871.0	Feb 10	73,600
1978- 79	8,820.0	24.0	247.0	178,725.0	Mar 27	33,900
1979- 80	21,500.0	30.2	522.1	369,810.0	Feb 16	74,400
1980- 81	3,870.0	26.6	128.4	93,065.0	Jan 29	33,600
1981- 82	5,730.0	24.6	178.0	128,979.0	Mar 14	29,400
1982-83	32,400.0	33.7	729.0	527,837.0	Mar 01	58,400
1983-84	5,650.0	22.8	131.0	94,770.0	Dec 05	22,400
1984-85	4,560.0	33.7	127.6	46,523.0		N.D.
1985-86	*	*	*	*		*
1986-87	*	*	*	*		*
1987-88	NO RECORD					
1988-89	*	*	*	*		*
1989-90	6,060.0	100.0	150.0	108,676.0	Feb 17	14,700
1990-91	7,850.0	99.0	243.0	178,822.0	Feb 27	37,300
1991-92	16,500.0	101.0	431.0	313,100.0	Feb 12	49,800
1992-93	17,000.0	111.0	740.0	536,100.0	Dec 07	60,400
1993-94	3,870.0	92.6	192.0	138,800.0	Feb 20	21,100
1994-95	24,200.0	96.5	487.0	352,800.0	Mar 11	74,300
1995-96	9,110.0	87.2	189.0	137,200.0	Feb 21	37,900
1996-97	6,170.0	98.0	232.0	168,000.0	Dec 09	29,900
1997-98	23,600.0	96.0	732.0	530,100.0	Feb 03	60,100
1998-99	4,100.0	88.0	241.0	174,300.0	Jan 31	20,500

M	Data Missing
*	Record incomplete
E	Estimate
N.D.	Not determined
**	Record not Computed
+	Less than 0.05 Acre Feet or less than 0.05 CFS, but greater than 0

RUNOFF – STREAM GAGING STATION PEAK FLOW

LOS ANGELES RIVER *below* Firestone Blvd.
STATION NO. F34D-R

Season	Daily CFS			Total Runoff (Acre-feet)	Peak Inflow	
	Maximum	Minimum	Mean		Date	CFS
1999-00	7,260.0	88.0	273.0	198,300.0	Feb 23	43,100
2000-01	10,100.0	88.0	345.0	250,100	Jan 11	49,600

M	Data Missing
*	Record incomplete
E	Estimate
N.D.	Not determined
**	Record not Computed
+	Less than 0.05 Acre Feet or less than 0.05 CFS, but greater than 0

RUNOFF – STREAM GAGING STATION PEAK FLOW

LOS ANGELES RIVER @ Tujunga Avenue
STATION NO. F300-R

Season	Daily CFS			Total Runoff (Acre-feet)	Peak Inflow	
	Maximum	Minimum	Mean		Date	CFS
1950-51	181.0	2.6	12.3	8,910.0	Jan 29	598
1951-52	5,360.0	3.1	101.0	73,040.0	Jan 15	13,200
1952-53	851.0	6.5	27.1	19,610.0	Dec 01	2,900
1953-54	1,360.0	4.6	27.2	19,690.0	Feb 13	5,190
1954-55	842.0	5.7	30.4	22,000.0	Jan 10	4,560
1955-56	3,890.0	5.7	35.1	25,490.0	Jan 16	6,800
1956-57	1,300.0	4.5	27.2	19,700.0	Jan 13	6,060
1957-58	3,530.0	3.8	100.0	72,710.0	Apr 03	10,800
1958-59	2,080.0	4.8	29.2	21,180.0	Jan 06	12,800
1959-60	1,040.0	4.0	28.0	20,650.0	Jan 12	6,900
1960-61	1,010.0	3.2	18.3	13,260.0	Nov 05	6,600
1961-62	6,170.0	2.6	97.7	70,690.0	Feb 12	21,000
1962-63	2,200.0	4.0	34.1	24,690.0	Feb 09	8,700
1963-64	1,440.0	3.6	35.4	25,730.0	Jan 22	7,910
1964-65	2,020.0	5.0	50.4	36,490.0	Apr 09	7,840
1965-66	8,990.0	8.2	126.0	91,340.0	Dec 29	20,500
1966-67	5,860.0	5.2	83.3	60,320.0	Nov 07	21,000
1967-68	5,720.0	5.5	66.8	48,500.0	Mar 08	18,300
1968-69	19,100.0	4.8	355.0	256,800.0	Jan 25	30,800
1969-70	2,450.0	6.4	55.4	40,080.0	Mar 04	11,600
1970-71	9,170.0	7.0	95.4	69,090.0	Nov 29	25,900
1971-72	2,800.0	7.8	38.0	27,520.0	Dec 27	11,000
1972-73	6,470.0	5.5	101.0	73,100.0	Jan 18	17,900
1973-74	7,650.0	5.0	73.0	52,830.0	Jan 07	16,100
1974-75	3,570.0	5.0	57.1	41,310.0	Dec 04	16,740
1975-76	2,440.0	3.7	35.5	25,200.0	Feb 09	9,680
1976-77	2,920.0	1.5	50.9	36,850.0	Jan 03	15,300
1977-78	19,200.0	.8	454.6	329,106.0	Feb 10	30,100
1978-79	5,210.0	5.5	136.0	98,301.0	Mar 27	22,500
1979-80	944.0	8.0	278.0	202.049.0	Feb 16	29,625
1980-81	2,600.0	10.0	77.7	56,220.0	Jan 29	17,940
1981-82	3,610.0	5.0	72.7	52,648.0	Mar 17	17,800
1982-83	19,580.0	5.7	416.8	301,711.0	Mar 01	27,625
1983-84	NO RECORD					
1984-85	1,820.0	8.1	47.4	34,312.0	Dec 18	6,740
1985-86	3,060.0	20.0	126.0	91,248.0	Jan 31	16,700

M	Data Missing
*	Record incomplete
E	Estimate
N.D.	Not determined
**	Record not Computed
+	Less than 0.05 Acre Feet or less than 0.05 CFS, but greater than 0

RUNOFF – STREAM GAGING STATION PEAK FLOW

LOS ANGELES RIVER @ Tujunga Avenue
STATION NO. F300-R

Season	Daily CFS			Total Runoff (Acre-feet)	Peak Inflow	
	Maximum	Minimum	Mean		Date	CFS
1986-87	*	*	*	*		*
1987-88	3,850.0	31.7	164.4	118,911.0	Oct 22	24,300
1988-89	1,460.0	59.8	103.4	74,960.0	Dec 24	5,140
1989-90	2,910.0	55.6	93.5	67,699.0	Feb 17	7,296
1990-91	3,130.0	14.4	113.7	82,553.0	Feb 27	13,500
1991-92	10,800.0	33.7	239.0	173,398.0	Feb 11	22,300
1992-93	10,600.0	51.9	416.0	301,300.0	Feb 07	25,700
1993-94	2,390.0	54.7	133.0	96,020.0		N.D.
1994-95	10,800.0	53.7	252.0	167,800.0	Mar 10	35,000
1995-96	3,110.0	51.0	117.0	84,630.0	Feb 21	13,000
1996-97	2,590.0	53.0	156.0	112,700.0	Dec 09	12,300
1997-98	11,900.0	63.0	420.0	304,200.0	Feb 23	30,500
1998-99	1,200.0	35.0	85.1	61,630.0	Jan 31	9,320
1999-00	2,790.0	47.0	134.0	97,450.0	Feb 23	17,200
2000-01	5,370.0	26.0	179.0	129,600.0	Jan 11	31,000

M	Data Missing
*	Record incomplete
E	Estimate
N.D.	Not determined
**	Record not Computed
+	Less than 0.05 Acre Feet or less than 0.05 CFS, but greater than 0

RUNOFF – STREAM GAGING STATION PEAK FLOW

MALIBU CREEK *below* Cold Creek
STATION NO. F130-R

Season	Daily CFS			Total Runoff (Acre-feet)	Peak Inflow	
	Maximum	Minimum	Mean		Date	CFS
1930-31	*	*	*	1920*	Feb 04	723
1931-32	1,770.0	+	20.2	14,670.0	Feb 09	3,100
1932-33	1,100.0	.1	12.7	9,190.0	Jan 19	4,460
1933-34	3,160.0	.1	17.1	12,370.0	Jan 01	9,650
1934-35	511.0	+	8.6	6,220.0		N.D.
1935-36	92.0	.0	3.2	2,310.0	Feb 23	147
1936-37	1,680.0	.0	33.1	23,940.0	Feb 14	2,760
1937-38	5,090.0	.2	47.1	34,100.0	Mar 02	10,000
1938-39	139.0	.0	6.4	4,630.0	Dec 20	331
1939-40	335.0	+	8.4	6,100.0	Feb 02	690
1940-41	2,200.0	.1	101.0	73,220.0	Feb 20	3,620
1941-42	32.0	.1	2.5	1,820.0	Dec 28	140
1942-43	5,370.0	.1	65.8	47,600.0	Jan 22	12,200
1943-44	3,400.0	.7	41.6	30,170.0	Feb 22	7,700
1944-45	210.0	.2	5.8	4,240.0	Feb 02	516
1945-46	267.0	.1	5.2	3,800.0	Mar 30	506
1946-47	142.0	.1	5.3	3,820.0	Nov 13	980
1947-48	15.0	+	.2	177.0	Mar 24	113
1948-49	.6	+	.1	90.0	May 18	1
1949-50	64.0	.0	.7	477.0	Feb 06	674
1950-51	.3	.0	.1	56.0	Jan 11	3
1951-52	6,720.0	.0	80.2	58,200.0	Mar 15	13,600
1952-53	81.0	+	4.0	2,940.0	Nov 15	322
1953-54	655.0	.1	6.9	4,990.0	Feb 13	2,250
1954-55	16.0	.1	1.0	758.0	Jan 18	45
1955-56	1,260.0	.1	6.5	4,680.0	Jan 26	3,600
1956-57	12.0	+	.6	444.0	Feb 23	46
1957-58	1,630.0	+	43.7	31,660.0	Apr 03	4,260
1958-59	114.0	.1	2.1	1,510.0	Jan 06	3,180
1959-60	17.0	+	.7	504.0	Apr 27	84
1960-61	2.0	+	.1	99.0	Jan 26	8
1961-62	3,920.0	+	36.3	26,150.0	Feb 10	7,060
1962-63	24.0	+	1.0	701.0	Mar 16	104
1963-64	17.0	+	.5	384.0	Jan 22	65
1964-65	148.0	+	2.2	1,560.0	Apr 09	521
1965-66	7,060.0	.2	51.8	37,520.0	Dec 29	20,600

M	Data Missing
*	Record incomplete
E	Estimate
N.D.	Not determined
**	Record not Computed
+	Less than 0.05 Acre Feet or less than 0.05 CFS, but greater than 0

RUNOFF – STREAM GAGING STATION PEAK FLOW

MALIBU CREEK *below* Cold Creek
STATION NO. F130-R

Season	Daily CFS			Total Runoff (Acre-feet)	Peak Inflow	
	Maximum	Minimum	Mean		Date	CFS
1966-67	2,710.0	.9	35.5	25,700.0	Jan 24	10,200
1967-68	1,350.0	1.0	18.5	13,430.0	Mar 08	3,830
1968-69	24,200.0	1.4	166.0	119,900.0	Jan 25	33,800
1969-70	368.0	.5	9.9	7,200.0	Mar 04	1,150
1970-71	1,480.0	1.2	23.7	17,300.0	Dec 19	7,390
1971-72	582.0	.9	6.0	4,340.0	Dec 27	2,120
1972-73	3,340.0	.8	35.1	25,400.0	Feb 11	7,480
1973-74	2,240.0	2.7	22.0	15,910.0	Jan 07	5,100
1974-75	519.0	2.3	15.2	11,020.0	Dec 04	2,670
1975-76	163.0	1.1	5.4	3,910.0	Feb 09	339
1976-77	315.0	1.1	6.9	4,980.0	Jan 07	597
1977-78	7,620.0	1.7	112.4	80,990.0	Mar 04	19,400
1978-79	1,220.0	2.3	46.4	33,408.0	Mar 27	4,420
1979-80	1,080.0	N.D.	N.D.	22,308.0	Feb 16	42,170
1980-81	357.0	1.7	13.5	9,832.0	Mar 05	910
1981-82	400.0	2.2	13.9	10,031.0	Mar 17	676
1982-83	7,720.0	2.7	121.8	88,148.0	Mar 01	24,200
1983-84	758.0	2.5	.8	17,411.0	Dec 25	1,840
1984-85	588.0	.9	.5	12,002.0	Dec 19	880
1985-86	1,480.0	1.4	39.3	27,881.0	Feb 15	5,880
1986-87	216.0	.5	8.6	6,236.0	Nov 18	653
1987-88	559.0	.6	24.0	17,337.0	Feb 28	1,680
1988-89	257.0	1.6	.4	8,876.0	Feb 09	441
1989-90	*	*	*	*		*
1990-91	982.0	.8	20.5	14,872.0	Mar 19	3,150
1991-92	5,850.0	2.0	92.7	67,330.0	Feb 10	23,300
1992-93	*	*	*	*		*
1993-94	880.0	.9	16.7	11,090.0	Feb 12	2,450
1994-95	4,530.0	3.1	97.8	68,700.0	Mar 11	15,700
1995-96	637.0	1.5	12.9	9,395.0	Feb 21	1,220
1996-97	807.0	3.2	43.1	31,180.0	Dec 09	1,800
1997-98	4,020.0	2.4	113.0	81,700.0	Feb 07	19,100
1998-99	134.0	2.8	10.3	7,430.0	Apr 11	761
1999-00	701.0	1.4	22.6	16,400.0	Feb 23	2,380
2000-01	3,950.0	0.6	53.8	38,920	Mar 06	10,900

M	Data Missing
*	Record incomplete
E	Estimate
N.D.	Not determined
**	Record not Computed
+	Less than 0.05 Acre Feet or less than 0.05 CFS, but greater than 0

RUNOFF – STREAM GAGING STATION PEAK FLOW

MESCAL CREEK @ Mouth of Canyon
STATION NO. F395-R

Season	Daily CFS			Total Runoff (Acre-feet)	Peak Inflow	
	Maximum	Minimum	Mean		Date	CFS
1982-83*	72.0	0.0	5.2	3,795.0	Mar 01	120
1983-84	17.3	0.0	2.6	1,905.1	Dec 25	35
1984-85	1.6	0.0	0.2	139.6	Dec 27	8
1985-86	40.9	0.0	1.1	794.2	Feb 15	115
1986-87	1.7	0.0	0.1	39.1	Mar 07	9
1987-88	5.4	0.0	0.4	324.7		
1988-89	3.7	0.0	0.2	121.2	Mar 04	17
1989-90*	3.5	0.0	0.1	26.8		
1990-91	20.8	0.0	8.4	511.7		
1991-92*	59.7	0.0	2.1	1,235.0		
1992-93*	153.0	0.0	11.4	4,538.0		
1993-94	NO RECORD					
1994-95	69.3	0.0	3.0	2,184.0	Mar 05	132
1995-96*	13.6	0.0	0.5	369.0	Apr 08	127
1996-97	17.0	0.0	0.4	264.0	Jan 26	40
1997-98	71.0	0.0	4.2	3,050.0	Feb 23	174
1998-99	1.0	0.0	0.1	104.0	Jul 14	3
1999-00*	2.0	0.0	0.2	124.0	Feb 21	4
2000-01	14.0	0.0	1.3	952.0	May 21	15

M	Data Missing
*	Record incomplete
E	Estimate
N.D.	Not determined
**	Record not Computed
+	Less than 0.05 Acre Feet or less than 0.05 CFS, but greater than 0

RUNOFF – STREAM GAGING STATION PEAK FLOW

MINT CANYON CREEK @ Fitch Avenue
STATION NO. F328-R

Season	Daily CFS			Total Runoff (Acre-feet)	Peak Inflow	
	Maximum	Minimum	Mean		Date	CFS
1957-58	66.0	.0	.6	435.0	Dec 15	708
1958-59	14.0	.0	+	44.0	Jan 06	317
1959-60	.3	.0	+	2.0	Jan 10	8
1960-61	3.6	.0	+	14.0	Nov 05	64
1961-62	49.0	.0	.4	257.0	Feb 11	176
1962-63	3.0	.0	+	26.0	Sep 18	70
1963-64	13.0	.0	.1	45.0	Apr 01	111
1964-65	17.0	.0	.1	66.0	Apr 08	94
1965-66	71.0	.0	.8	588.0	Nov 17	684
1966-67	14.0	.0	.1	72.0	Dec 03	185
1967-68	13.0	.0	+	34.0	Nov 19	251
1968-69	1,030.0	.0	4.4	3,190.0	Feb 25	3,500
1969-70	5.0	.0	.1	25.0	Feb 28	46
1970-71	85.0	.0	.4	328.0	Nov 29	943
1971-72	5.9	.0	.1	35.0	Dec 27	60
1972-73	25.0	.0	.2	117.0	Feb 11	184
1973-74	2.8	.0	+	13.0	Jan 07	11
1974-75	4.4	.0	+	27.0	Mar 08	85
1975-76	12.0	.0	.1	46.0	Sep 05	389
1976-77	3.9	.0	.0	18.0	May 08	43
1977-78	181	.0	1.6	1,188.0	Mar 04	958
1978-79	48.0	.0	.2	144.0	Mar 28	395
1979-80	119.4	.0	1.7	1,201.0	Feb 16	415
1980-81	8.2	.0	.3	237.0	Jan 28	80
1981-82	22.6	.0	8.6	483.0	Mar 17	157
1982-83	392.0	.0	2.6	1,873.0	Mar 02	1,353
1983-84	1.8	.0	.2	202.0	Dec 25	6
1984-85	16.1	.0	.1	65.0	Dec 19	46
1985-86	59.7	.0	9.9	302.0	Mar 16	188
1986-87	.0	.0	.0	.0		0
1987-88	8.8	.0	.1	46.0		
1988-89	19.0	.0	.2	131.0	Feb 09	71
1989-90	37.8	.0	.5	356.0		
1990-91	.0	.0	.0	.0		0
1991-92	*	*	*	*		*
1992-93	77.1	.0	4.0	2,929.0	Mar 22	87

M	Data Missing
*	Record incomplete
E	Estimate
N.D.	Not determined
**	Record not Computed
+	Less than 0.05 Acre Feet or less than 0.05 CFS, but greater than 0

RUNOFF – STREAM GAGING STATION PEAK FLOW

MINT CANYON CREEK @ Fitch Avenue
STATION NO. F328-R

Season	Daily CFS			Total Runoff (Acre-feet)	Peak Inflow	
	Maximum	Minimum	Mean		Date	CFS
1993-94	1.5	.0	.5	392.0	Feb 04	2
1994-95	43.5	.1	*	*	Jan 10	157
1995-96	60.4	.0	.7	478.0		*
1996-97	4.0	.0	.1	59.0	Jan 26	33
1997-98	276.0	.0	1.5	1,080.0	Feb 23	1,560
1998-99	4.7	.0	.9	68.0	Oct 18	27
1999-00	40.0	.0	.3	219.0	Feb 23	167
2000-01	13.0	0.0	0.1	57.0	Feb 13	50

M	Data Missing
*	Record incomplete
E	Estimate
N.D.	Not determined
**	Record not Computed
+	Less than 0.05 Acre Feet or less than 0.05 CFS, but greater than 0

RUNOFF – STREAM GAGING STATION PEAK FLOW

MONTEBELLO STORM DRAIN *outlet to* Rio Hondo
STATION NO. F181-R

Season	Daily CFS			Total Runoff (Acre-feet)	Peak Inflow	
	Maximum	Minimum	Mean		Date	CFS
1931-32	*	.0	*	1120*	Jan 31	531
1932-33	125.0	.0	.8	529.0	Jan 19	713
1933-34	391.0	.0	2.6	1,910.0	Jan 01	1,360
1934-35	114.0	.0	2.3	1,650.0	Jan 05	1,140
1935-36	55.0	.0	1.2	889.0	Feb 14	374
1936-37	NO RECORD					
1937-38	N.D.	N.D.	N.D.	N.D.	Mar 02	1400E
1938-39	147.0	.0	1.4	981.0	Sep 25	688
1939-40	77.0	.1	1.2	885.0	Feb 01	729
1940-41	204.0	.1	5.6	4,090.0	Mar 03	936
1941-42	102.0	.1	1.3	962.0	Dec 10	521
1942-43	300E	.1	3.6	2,580.0		N.D.
1943-44	323E	.1	3.3	2,390.0	Feb 22	1,040
1944-45	64.0	0.1E	.8	768.0	Nov 11	506
1945-46	92.0	.0	1.2	865.0	Dec 22	384
1946-47	144.0	.1	1.9	1,350.0	Nov 13	1,240
1947-48	86.0	.1	1.3	913.0	Dec 05	1,230
1948-49	41.0	.1	1.2	861.0	Dec 17	347
1949-50	95.0	.1	1.7	1,240.0	Jan 08	790
1950-51	50.0	.1	1.2	888.0	Jan 10	333
1951-52	302.0	.1	4.6	3,330.0	Mar 07	1,010
1952-53	97.0	.1	2.0	1,430.0	Nov 15	770
1953-54	232.0	.1	3.0	2,190.0	Feb 13	1,010
1954-55	*	*	*	1210*	Jan 18	759
1955-56	463.0	+	2.9	2,110.0	Jan 26	856
1956-57	65.0	+	1.6	1,120.0	Feb 28	570
1957-58	199.0	+	4.5	3,250.0	Feb 19	865
1958-59	109.0	.1	1.7	1,230.0	Jan 06	869
1959-60	96.0	.1	2.1	1,530.0	Jan 12	784
1960-61	65.0	.1	1.2	884.0	Nov 26	478
1961-62	225.0	.1	4.6	3,370.0	Feb 12	783
1962-63	129.0	.3	2.1	1,530.0	Mar 16	851
1963-64	77.0	.2	1.8	1,280.0	Nov 19	553
1964-65	124.0	+	2.7	1,970.0	Apr 09	844
1965-66	281.0	.1	4.4	3,200.0	Dec 29	904
1966-67	288.0	.2	4.9	3,560.0	Jan 24	1,060

M	Data Missing
*	Record incomplete
E	Estimate
N.D.	Not determined
**	Record not Computed
+	Less than 0.05 Acre Feet or less than 0.05 CFS, but greater than 0

RUNOFF – STREAM GAGING STATION PEAK FLOW

MONTEBELLO STORM DRAIN *outlet to* Rio Hondo
STATION NO. F181-R

Season	Daily CFS			Total Runoff (Acre-feet)	Peak Inflow	
	Maximum	Minimum	Mean		Date	CFS
1967-68	198.0	.2	2.9	2,130.0	Mar 08	923
1968-69	424.0	.2	8.5	6,165.0	Jan 25	1600E
1969-70	135.0	+	2.4	1,740.0	Feb 10	792
1970-71	169.0	+	2.8	2,000.0	Nov 29	833
1971-72	142.0	.2	1.6	1,160.0	Dec 24	637
1972-73	140.0	.1	3.8	2,740.0	Feb 27	811
1973-74	128.0	+	1.4	988.0	Jan 07	546
1974-75	61.0	+	1.0	748.0	Dec 04	608
1975-76	39.0	+	.8	603.0	Sep 11	240
1976-77	36.1	.0	.7	490.0	May 08	226
1977-78	318.0	.0	4.2	3,050.0	Jan 16	991
1978-79	107.0	.0	1.7	1,239.0	Mar 27	619
1979-80	809.0	.0	9.6	6,759.0		N.D.
1980-81	52.8	.0	.7	515.0	Mar 02	293
1981-82	62.2	.0	1.0	728.0	Nov 28	341
1982-83	630.0	.0	6.0	4,319.0	Mar 01	1,620
1983-84	31.7	.0	6.0	455.0	Oct 01	506
1984-85	43.5	.0	.9	644.0	Dec 19	469
1985-86	77.6	.0	1.4	1,327.0	Feb 14	676
1986-87	38.6	.0	.5	391.0	Oct 02	520
1987-88	81.2	.0	1.1	775.0	Jan 17	493
1988-89	30.3	.1	1.0	726.0	Dec 21	255
1989-90	110.0	.1	1.1	767.0	Feb 17	500
1990-91	74.8	.0	1.3	907.0	Feb 27	486
1991-92	183.0	.1	2.2	1,565.0	Feb 12	1,020
1992-93	204.0	.0	4.6	3,364.0	Dec 07	1,040
1993-94	47.7	.0	.7	536.0	Mar 19	542
1994-95	131.0	.0	4.0	2,896.0	Jan 10	1,340
1995-96	134.0	.0	1.1	792.0	Feb 20	899
1996-97	35.0	.0	1.0	745.0	Jan 15	290
1997-98	60.0	+	1.7	1,230.0	Feb 06	658
1998-99	26.0	.0	.5	358.0	Nov 28	214
1999-00	124.0	.1	1.8	1,270.0	Feb 23	254
2000-01	66.0	+	1.5	1,060	Jan 12	641

M	Data Missing
*	Record incomplete
E	Estimate
N.D.	Not determined
**	Record not Computed
+	Less than 0.05 Acre Feet or less than 0.05 CFS, but greater than 0

RUNOFF – STREAM GAGING STATION PEAK FLOW

PACOIMA CREEK FLUME *below* Pacoima Dam
STATION NO. F118B-R

Season	Daily CFS			Total Runoff (Acre-feet)	Peak Inflow	
	Maximum	Minimum	Mean		Date	CFS
1931-32	75.0	0.0	11.7	8,408.8	Feb 16	75
1932-33	27.8	0.0	2.5	1,790.8	Apr 13	81
1933-34	39.7	0.1	3.9	2,543.5	Jan 26	54
1934-35	56.0	0.0	9.0	3,961.6	Aug 21	174
1935-36	57.0	0.0	4.2	3,021.2	May 13	153
1936-37	216.0	0.0	20.7	14,559.0	Mar 02	233
1937-38	339.0	0.0	33.1	22,739.1	Mar 02	685
1938-39	49.0	0.1	4.9	3,079.2	Jan 20	52
1939-40	123.0	0.1	4.5	3,177.9	Feb 04	169
1940-41	431.0	0.0	41.0	26,430.0	Mar 05	460
1941-42	25.0	0.0	3.5	1,986.6	Jul 15	97
1942-43	576.0	0.0	31.3	20,401.8	Jan 23	598
1943-44	305.0	0.0	21.0	15,136.5	Mar 02	326
1944-45	174.0	0.0	7.6	4,909.3	Feb 02	397
1945-46	137.0	0.0	8.3	2,904.0	Feb 05	241
1946-47	230.0	0.0	8.2	6,026.4	Jan 07	237
1947-48	6.4	0.0	0.4	322.5	Jun 22	10
1948-49	7.9	0.0	1.4	739.8	Jun 24	10
1949-50	98.0	0.0	1.4	1,020.7	Apr 11	314
1950-51	5.3	0.0	0.1	66.0	Jun 12	17
1951-52	416.0	0.0	19.6	14,350.4	Jan 18	634
1952-53	157.0	0.0	4.9	3,502.0	Nov 17	163
1953-54	229.0	0.0	4.1	2,941.9	Apr 05	292
1954-55	14.7	0.0	1.0	737.1	Apr 21	42
1955-56	5.2	0.0	1.7	1,251.8	Nov 23	66
1956-57	28.0	0.0	1.1	774.5	May 07	47
1957-58						
1958-59						
1959-60	3.7	0.0	0.4	268.8	Aug 02	5
1960-61	0.1	0.0	0.0	6.2		1
1961-62	160.0	0.0	9.2	6,340.4	Apr 07	511
1962-63	20.0	0.0	0.3	193.2	Sep 25	23
1963-64	19.3	0.0	0.9	666.8	Jun 15	117
1964-65	5.1	0.0	1.4	996.5	May 07	6
1965-66	480.0	0.0	20.9	15,184.1	Nov 23	664
1966-67	193.0	0.0	32.5	23,601.5	Jul 06	197

M	Data Missing
*	Record incomplete
E	Estimate
N.D.	Not determined
**	Record not Computed
+	Less than 0.05 Acre Feet or less than 0.05 CFS, but greater than 0

RUNOFF – STREAM GAGING STATION PEAK FLOW

PACOIMA CREEK FLUME *below* Pacoima Dam
STATION NO. F118B-R

Season	Daily CFS			Total Runoff (Acre-feet)	Peak Inflow	
	Maximum	Minimum	Mean		Date	CFS
1967-68						
1968-69						
1969-70						
1970-71						
1971-72						
1972-73						
1973-74						
1974-75	66.0	0.1	3.5	2,527.5	Dec 12	211
1975-76	63.8	0.1	2.2	1,613.6	Jun 15	66
1976-77	25.9	0.0	0.7	507.8	Apr 04	460
1977-78	1,029.0	0.0	54.7	39,723.8	Mar 04	39,724
1978-79	134.4	0.0	16.6	12,016.9		
1979-80	980.0	0.0	35.8	26,180.6	Feb 16	977
1980-81	124.0	0.0	4.7	3,438.5	Feb 05	134
1981-82	131.0	0.2	6.7	4,868.4	Mar 26	135
1982-83	2,044.0	0.2	61.4	44,490.0	Mar 01	3,941
1983-84	101.0	0.0	1.9	1,386.2	Jan 25	252
1984-85	170.0	0.0	4.8	3,466.9		
1985-86	110.0	0.0	9.8	7,083.0	May 27	245
1986-87	33.6	0.0	0.0	0.0		
1987-88	58.9	0.0	4.7	3,366.1		
1988-89	36.0	0.0	2.6	1,924.8	Dec 21	309
1989-90	93.5	0.0	0.7	675.0	Oct 11	308
1990-91	355.0	0.0	40.5	26,401.4		
1991-92	704.0	0.0	28.7	20,798.0	Feb 12	917
1992-93	688.0	0.0	69.8	50,500.0	Jan 13	745
1993-94*	71.3	0.0	4.2	774.0		
1994-95						
1995-96						
1996-97	174.0	0.6	7.5	5,430.0		
1997-98	1,020.0	0.0	43.8	31,700.0		
1998-99	38.0	0.0	2.9	2,100.0	Nov 19	196
1999-00	30.0	0.0	2.5	1,830.0	Jun 22	224
2000-01	54.0	0.0	3.7	2,710.0	Jun 05	188

M	Data Missing
*	Record incomplete
E	Estimate
N.D.	Not determined
**	Record not Computed
+	Less than 0.05 Acre Feet or less than 0.05 CFS, but greater than 0

RUNOFF – STREAM GAGING STATION PEAK FLOW

PACOIMA DIVERSION @ Branford Street
STATION NO. F305-R

Season	Daily CFS			Total Runoff (Acre-feet)	Peak Inflow	
	Maximum	Minimum	Mean		Date	CFS
1953-54	116.0	0.0	1.4	975.9	Feb 13	508
1954-55	53.0	0.0	1.2	872.1	May 07	450
1955-56	194.0	0.0	1.6	1,122.8	Jan 26	622
1956-57	57.0	0.0	1.2	841.6	Jan 13	580
1957-58	326.0	0.0	8.9	6,390.1	Feb 04	1,380
1958-59	163.0	0.0	1.0	691.4	Jan 06	2,800
1959-60	46.0	0.0	1.0	689.7	Jan 11	666
1960-61	86.0	0.0	1.3	910.0	Nov 05	988
1961-62	104.0	0.0	1.4	988.2	Feb 11	2,960
1962-63	78.0	0.0	1.2	883.2	Apr 25	988
1963-64	150.0	0.0	1.5	1,116.1	Jan 22	2,550
1964-65	62.0	0.0	1.7	1,206.0	Apr 09	946
1965-66	614.0	0.0	8.6	6,144.2	Nov 17	4,800
1966-67	312.0	0.0	6.3	4,562.1	Jan 22	3,140
1967-68						
1968-69						
1969-70						
1970-71						
1971-72						
1972-73						
1973-74						
1974-75	136.0	0.6	4.1	2,959.7	Mar 06	1,590
1975-76	107.0	0.7	2.8	2,039.2	Sep 05	2,580
1976-77	135.0	0.5	2.7	1,978.1	Jan 03	2,860
1977-78	3,200.0	0.6	704.1	42,305.5	Mar 04	3,730
1978-79	214.0	0.7	6.4	4,628.6	Mar 28	4,090
1979-80	1,180.0	0.6	8.3	17,147.5		
1980-81	162.0	0.0	3.0	2,145.5	Jan 29	3,790
1981-82	250.0	0.2	3.7	2,709.2	Mar 17	4,660
1982-83	4,280.0	0.0	60.8	44,045.2	Mar 01	10,900
1983-84	68.5	0.0	2.6	1,921.2	Oct 04	896
1984-85	65.0	0.1	1.5	1,103.6	Dec 18	1,270
1985-86	134.0	0.0	3.2	2,280.0	Jan 31	2,230
1986-87	141.0	0.0	2.9	2,118.9	Nov 17	2,260
1987-88	388.0	0.2	4.9	3,592.5	Oct 22	7,470
1988-89	772.0	0.7	3.6	2,639.4	Nov 14	740

M	Data Missing
*	Record incomplete
E	Estimate
N.D.	Not determined
**	Record not Computed
+	Less than 0.05 Acre Feet or less than 0.05 CFS, but greater than 0

RUNOFF – STREAM GAGING STATION PEAK FLOW

PACOIMA DIVERSION @ Branford Street
STATION NO. F305-R

Season	Daily CFS			Total Runoff (Acre-feet)	Peak Inflow	
	Maximum	Minimum	Mean		Date	CFS
1989-90	77.5	0.8	2.8	2,050.5	Feb 04	1,050
1990-91	M	M	M	M		M
1991-92	1,130.0	0.7	16.8	12,188.2	Feb 04	9,700
1992-93	1,420.0	0.5	55.3	40,071.1	Dec 07	6,470
1993-94	154.0	0.7	4.9	3,531.0	Dec 11	3,190
1994-95	1,250.0	0.0	18.8	13,621.3	Mar 10	7,250
1995-96	364.0	0.4	5.5	4,020.9	Feb 21	3,700
1996-97	225.0	1.3	7.0	5,052.3	Dec 22	4,700
1997-98	1,460.0	1.0	34.5	25,006.8	Feb 07	13,600
1998-99	108.0	1.8	6.4	4,622.3	Oct 29	3,350
1999-00*	169.0	2.3	6.1	4,390.0	Feb 20	3,740
2000-01	305.0	1.3	7.0	5,030.0	Jan 11	6,130

M	Data Missing
*	Record incomplete
E	Estimate
N.D.	Not determined
**	Record not Computed
+	Less than 0.05 Acre Feet or less than 0.05 CFS, but greater than 0

RUNOFF – STREAM GAGING STATION PEAK FLOW

PALLETT CREEK @ Valyermo Highway
STATION NO. F122-R

Season	Daily CFS			Total Runoff (Acre-feet)	Peak Inflow	
	Maximum	Minimum	Mean		Date	CFS
1961-62	92.0	.0	.4	311.0	Feb 11	259
1962-63	.7	.0	.3	190.0	Feb 09	3
1963-64	.0	.0	.0	.0		0
1964-65	.3	.0	+	1.0	Aug 12	16
1965-66	53.0	.0	1.5	1,110.0	Dec 29	176
1966-67	3.8	.3	.8	618.0	Dec 06	7
1967-68	5.0	.3	.8	615.0	Nov 21	10
1968-69	770.0	.3	7.8	5,640.0	Feb 25	1,480
1969-70	37.0	.6	1.2	846.0	Feb 28	161
1970-71	183.0	.1	1.0	744.0	Nov 29	839
1971-72	56.0	.1	.6	452.0	Dec 25	282
1972-73	6.5	+	.2	156.0	Feb 11	24
1973-74	.6	.1	.3	213.0	Dec 11	1
1974-75	1.6	.0	.2	140.0	Dec 04	10
1975-76	2.5	.0	.1	87.0	Sep 24	51
1976-77	2.5	.0	.1	39.0	May 08	10
1977-78	1,220.0	.0	30.3	24,125.0	Feb 10	1,630
1978-79	156.0	.6	5.9	4,312.0	Mar 29	191
1979-80	210.0	.0	7.6	5,487.0	Feb 16	1,470
1980-81	15.8	.0	1.7	1,193.0	Mar 01	60
1981-82	12.8	.0	.6	423.0	Apr 11	49
1982-83	454.0		1.9	8,626.0	Mar 01	831
1983-84	15.0	.2	1.8	1,282.0	Jul 30	147
1984-85	11.6	.0	.4	292.0	Dec 27	14
1985-86	37.3	.0	.9	622.0	Jan 30	124
1986-87	1.5	.0	.4	264.0	Feb 25	3
1987-88	21.9	.0	.3	245.0		N.D.
1988-89	.5	.0	.1	105.0	Dec 16	1
1989-90	.0	.0	.0	.0		0
1990-91	.0	.0	.0	.0		0
1991-92	240.0	.0	4.9	3,570.0	Feb 12	670
1992-93	498.0		5.2	10,980.0	Feb 24	621
1993-94	2.0	.2	1.0	645.0		N.D.
1994-95	133.0	.0	6.8	4,934.0	Mar 11	579
1995-96	1.6	.0	.7	534.0	Jul 24	14
1996-97	.4	.0	.1	90.0	Feb 08	1

M	Data Missing
*	Record incomplete
E	Estimate
N.D.	Not determined
**	Record not Computed
+	Less than 0.05 Acre Feet or less than 0.05 CFS, but greater than 0

RUNOFF – STREAM GAGING STATION PEAK FLOW

PALLETT CREEK @ Valyermo Highway
STATION NO. F122-R

Season	Daily CFS			Total Runoff (Acre-feet)	Peak Inflow	
	Maximum	Minimum	Mean		Date	CFS
1997-98	47.0	.0	5.1	3,680.0	Feb 23	231
1998-99	2.6	.1	.9	655.0	Nov 28	6
1999-00	8.9	.0	.2	115.0	Feb 20	76
2000-01	3.8	0.0	0.7	513.0	Jan 02	45

M	Data Missing
*	Record incomplete
E	Estimate
N.D.	Not determined
**	Record not Computed
+	Less than 0.05 Acre Feet or less than 0.05 CFS, but greater than 0

RUNOFF – STREAM GAGING STATION PEAK FLOW

RIO HONDO *below* Lower Azusa Avenue
STATION NO. F192B-R

Season	Daily CFS			Total Runoff (Acre-feet)	Peak Inflow	
	Maximum	Minimum	Mean		Date	CFS
1931-32	*	*	*	12710*		N.D.
1932-33	937.0	.0	5.2	3,800.0	Jan 20	5,160
1933-34	2,700.0	.0	11.2	8,110.0	Jan 01	5,860
1934-35	324.0	.0	11.3	8,160.0	Apr 08	604
1935-36	114.0	.0	4.7	3,400.0	Feb 11	391
1936-37	904.0	.0	38.6	27,960.0	Feb 20	1,030
1937-38	10,500.0	.0	241.0	174,300.0	Mar 02	31,000
1938-39	191.0	.0	2.2	1,570.0	Jan 05	680
1939-40	224.0	.0	5.0	3,640.0	Jan 07	288
1940-41	2,220.0	.0	113.0	81,450.0	Mar 04	4,000
1941-42	214.0	.1	2.7	1,980.0	Dec 10	254
1942-43	1,300.0	.0	14.7	10,680.0	Jan 23	3,500
1943-44	502.0	.3	15.9	11,600.0	Feb 22	1,080
1944-45	112.0	.1	1.9	1,380.0	Nov 11	1,060
1945-46	267.0	.0	18.0	13,030.0	Dec 23	483
1946-47	279.0	.0	11.8	8,560.0	Nov 27	283
1947-48	570.0	.0	7.2	5,250.0	Jun 07	584
1948-49	4.9	.0	.1	71.0	Feb 27	50
1949-50	24.0	.0	.3	203.0	Dec 18	124
1950-51	24.0	.0	.3	234.0	Jan 11	636
1951-52	753.0	.0	8.7	6,340.0	Jan 16	2,180
1952-53	785.0	.0	9.0	6,550.0	Nov 15	944
1953-54	654.0	.0	14.9	10,800.0	Feb 13	1,740
1954-55	184.0	.0	2.0	1,460.0	Jan 18	2,340
1955-56	1,020.0	.0	4.0	2,940.0	Jan 26	3,030
1956-57	390.0	.0	5.9	4,280.0	Feb 23	2,270
1957-58	735.0	.0	32.6	23610*	Feb 19	1,530
1958-59	218.0	.0	1.8	1290*	Jan 06	1,530
1959-60	30.0	.0	.4	303.0	Jan 12	185
1960-61	16.0	.0	.2	131.0	Nov 05	132
1961-62	630.0	.0	13.1	9,460.0	Feb 12	856
1962-63	28.0	.0	.3	221.0	Mar 16	182
1963-64	22.0	.0	.3	187.0	Jan 21	296
1964-65	32.0	.0	.5	340.0	Apr 09	397
1965-66	261.0	.0	7.7	5,570.0	Nov 24	1,440
1966-67	175.0	.0	14.7	10,620.0	Jan 22	438

M	Data Missing
*	Record incomplete
E	Estimate
N.D.	Not determined
**	Record not Computed
+	Less than 0.05 Acre Feet or less than 0.05 CFS, but greater than 0

RUNOFF – STREAM GAGING STATION PEAK FLOW

RIO HONDO *below* Lower Azusa Avenue
STATION NO. F192B-R

Season	Daily CFS			Total Runoff (Acre-feet)	Peak Inflow	
	Maximum	Minimum	Mean		Date	CFS
1967-68	61.0	.0	.8	576.0	Mar 08	714
1968-69	4,380.0	.0	100.0	72,550.0	Jan 25	10,600
1969-70	251.0	.0	5.0	3,580.0	Mar 04	1,160
1970-71	95.0	.0	4.2	3,060.0	Nov 29	446
1971-72	5.0	.0	.3	210.0	Dec 24	266
1972-73	270.0	.0	14.5	10,520.0	Feb 27	2,390
1973-74	144.0	.0	5.1	3,720.0	Jan 07	196
1974-75	54.0	+	.7	538.0	Dec 04	643
1975-76	34.0	.0	.5	345.0	Sep 11	635
1976-77	22.5	.0	.5	393.0	May 09	230
1977-78	1,910.0	.0	84.7	61,266.0	Mar 01	3,480
1978-79	163.0	.0	19.7	14,291.0	Feb 21	311
1979-80	1,490.0	.0	77.5	55,368.0	Feb 16	3,050
1980-81	237.0	.0	17.8	13,060.0	Dec 16	3,070
1981-82	196.0	.0	11.5	8,293.0	Sep 23	342
1982-83	350.0	.0	66.3	48,030.0	Apr 18	350
1983-84	251.0	.0	15.5	11,194.0	Nov 01	303
1984-85	12.5	.0	.2	175.0	Nov 08	216
1985-86	318.0	.0	36.7	26,570.0	Feb 15	357
1986-87	24.7	.0	.2	171.0	Jan 04	296
1987-88	223.0	.0	5.9	4,290.0	Dec 04	350
1988-89	12.7	.0	2.8	173.0	Dec 15	109
1989-90	46.2	.0	.4	259.0	Feb 17	236
1990-91	388.0	.0	11.3	7,831.0	Aug 01	356
1991-92	809.0	.0	25.4	18,429.0	Feb 13	3,860
1992-93	1,010.0	.0	65.6	47,470.0	Feb 19	3,190
1993-94	47.0	.0	2.4	1,748.0	Dec 14	272
1994-95	803.0	.0	33.8	24,500.0	Mar 11	3,210
1995-96	665.0	.0	29.1	21,100.0	Feb 21	1,400
1996-97	250.0	.0	15.8	11,400.0	Jan 26	634
1997-98	1,270.0	.0	35.4	25,610.0	Feb 07	3,670
1998-99	125.0	.0	3.2	2,290.0	Nov 08	348
1999-00	33.0	.0	.6	455.0	Apr 17	348
2000-01	37.0	0.0	0.5	391.0	Jan 11	318

M	Data Missing
*	Record incomplete
E	Estimate
N.D.	Not determined
**	Record not Computed
+	Less than 0.05 Acre Feet or less than 0.05 CFS, but greater than 0

RUNOFF – STREAM GAGING STATION PEAK FLOW

RIO HONDO *above* Stuart and Gray Road
STATION NO. F45B-R

Season	Daily CFS			Total Runoff (Acre-feet)	Peak Inflow	
	Maximum	Minimum	Mean		Date	CFS
1927-28	*	.0	*	269*	Mar 06	4*
1928-29	248.0	.0	3.4	2,460.0	Apr 04	912
1929-30	285.0	.0	2.8	2,000.0	Mar 15	743
1930-31	335.0	.0	2.6	1,900.0	Feb 04	841
1931-32	3,440.0	.0	27.4	19,920.0	Feb 09	4,610
1932-33	971.0	.0	6.2	4,450.0	Jan 19	2,730
1933-34	5,810.0	.0	23.5	17,030.0	Jan 01	16,000
1934-35	667.0	.0	8.3	6,000.0	Apr 08	3,450
1935-36	472.0	.0	5.8	4,220.0	Feb 12	3,160
1936-37	1,460.0	.0	37.1	26,870.0	Feb 14	4,800
1937-38	12,700.0	.0	238.0	172,100.0	Mar 03	24400E
1938-39	910.0	.0	13.2	9,540.0	Dec 18	5,260
1939-40	442.0	.0	6.7	4,850.0	Jan 08	1,930
1940-41	3,690.0	.0	129.0	93,260.0	Mar 04	6,420
1941-42	564.0	.0	9.3	6,730.0	Dec 10	4,240
1942-43	4,660.0	.0	57.9	41,910.0	Jan 23	11,800
1943-44	2570E	.0	36.9	26,820.0	Feb 22	6,670
1944-45	492.0	.0	11.7	8,460.0	Nov 11	4,500
1945-46	1,130.0	.0	15.6	11,280.0	Dec 22	4,270
1946-47	923.0	.0	22.1	16,030.0	Nov 13	5,950
1947-48	425.0	.0	4.8	3,510.0	Mar 24	2,880
1948-49	268.0	.0	2.1	1,490.0	Jan 20	713
1949-50	402.0	.0	3.9	2,840.0	Jan 08	1,790
1950-51	135.0	.0	1.1	781.0	Jan 29	1,080
1951-52	2,430.0	.0	35.9	26,040.0	Jan 16	9,040
1952-53	571.0	.0	4.8	3,450.0	Nov 15	4,600
1953-54	1,780.0	.0	14.9	10,760.0	Feb 13	8,860
1954-55	753.0	.0	11.1	8,000.0	Jan 18	4,160
1955-56	4,910.0	.0	20.0	14,540.0	Jan 26	11,600
1956-57	967.0	.0	6.4	4,640.0	Feb 23	6,560
1957-58	2,230.0	.0	41.8	30,260.0	Feb 19	10,800
1958-59	915.0	.0	5.4	3,900.0	Jan 06	11,000
1959-60	219.0	.0	3.3	2,370.0	Jan 12	3,030
1960-61	115.0	.0	1.2	831.0	Nov 26	2,090
1961-62	2,080.0	.0	31.4	22,780.0	Feb 19	7,100
1962-63	620.0	.0	4.5	3,280.0	Feb 09	4,240

M	Data Missing
*	Record incomplete
E	Estimate
N.D.	Not determined
**	Record not Computed
+	Less than 0.05 Acre Feet or less than 0.05 CFS, but greater than 0

RUNOFF – STREAM GAGING STATION PEAK FLOW

RIO HONDO *above* Stuart and Gray Road
STATION NO. F45B-R

Season	Daily CFS			Total Runoff (Acre-feet)	Peak Inflow	
	Maximum	Minimum	Mean		Date	CFS
1963-64	190.0	.0	2.4	1,730.0	Jan 22	2,060
1964-65	1,130.0	.0	7.3	5,310.0	Apr 09	8,780
1965-66	4,810.0	+	95.8	69,390.0	Dec 29	19,000
1966-67	5,210.0	+	26.6	21,530.0	Jan 24	20,100
1967-68	4,300.0	+	25.3	18,360.0	Mar 08	17,900
1968-69	23,100.0	+	424.0	307,100.0	Jan 25	46,900
1969-70	964.0	+	10.0	7,220.0	Feb 28	7,540
1970-71	2,430.0	+	13.1	9,520.0	Nov 29	9,350
1971-72	2,420.0	+	6.0	4,409.0	Dec 24	11,400
1972-73	2,550.0	+	21.9	15,860.0	Feb 11	15,180
1973-74	3,360.0	+	15.4	11,180.0	Jan 07	11,710
1974-75	303.0	+	9.5	6,910.0	Dec 04	13,250
1975-76	920.0	+	9.4	6,660.0	Sep 11	9,820
1976-77	619.0	.0	6.9	5,020.0	Oct 23	2,890
1977-78	13,800.0	+	270.0	195,463.0	Mar 01	32,000
1978-79	4,600.0	.5	46.5	33,662.0	Mar 27	25,600
1979-80	16,000.0	.5	313.4	221,877.0	Feb 16	48,100
1980-81	2,050.0	.0	13.2	9,539.0	Mar 01	13,500
1981-82	4,410.0	.0	28.7	20,768.0	Nov 28	17,100
1982-83	20,600.0	.0	236.5	172,592.0	Mar 01	38,400
1983-84	2,600.0	.0	17.2	12,502.0	Oct 01	9,480
1984-85	1,400.0	.0	14.1	10,216.0	Feb 09	7,130
1985-86	4,500.0	.0	*	*	Feb 15	19,400
1986-87	1,730.0	.1	8.6	6,256.0	Jan 04	10,000
1987-88	2,660.0	.0	16.7	12,111.0	Jan 17	11,300
1988-89	1,280.0	.1	12.4	8,967.0	Dec 21	6,050
1989-90	5,030.0	.1	16.9	12,222.0	Feb 17	17,500
1990-91	3,880.0	.0	34.1	24,720.0	Feb 27	19,600
1991-92	6,930.0	.1	56.7	41,160.0	Feb 12	32,000
1992-93	11,200.0	.0	386.0	279,400.0	Feb 18	32,800
1993-94	260.0	.0	10.0	7,222.0	Mar 19	4,240
1994-95	10,500.0	.1	164.0	119,100.0	Jan 10	37,400
1995-96	6,320.0	.0	40.3	29,240.0	Feb 20	20,200
1996-97	3,420.0	.1	30.7	22,230.0	Jan 25	13,300
1997-98	9,700.0	.0	178.0	129,200.0	Feb 08	34,700
1998-99	417.0	.0	3.9	2,850.0	Nov 08	2,360

M	Data Missing
*	Record incomplete
E	Estimate
N.D.	Not determined
**	Record not Computed
+	Less than 0.05 Acre Feet or less than 0.05 CFS, but greater than 0

RUNOFF – STREAM GAGING STATION PEAK FLOW

RIO HONDO *above* Stuart and Gray Road
STATION NO. F45B-R

Season	Daily CFS			Total Runoff (Acre-feet)	Peak Inflow	
	Maximum	Minimum	Mean		Date	CFS
1999-00	2,960.0	.0	44.7	18,990.0	Feb 23	14,600
2000-01	Under	Construct	since	May 2000.		

M	Data Missing
*	Record incomplete
E	Estimate
N.D.	Not determined
**	Record not Computed
+	Less than 0.05 Acre Feet or less than 0.05 CFS, but greater than 0

RUNOFF – STREAM GAGING STATION PEAK FLOW

RIO HONDO BYPASS - Zone One Ditch
STATION NO. F313B-R

Season	Daily CFS			Total Runoff (Acre-feet)	Peak Inflow	
	Maximum	Minimum	Mean		Date	CFS
1953-54	138.0	0.0	12.0	7,232.5		
1954-55	169.0	0.0	19.6	9,750.0		
1955-56	172.0	0.0	23.5	14,983.5		
1956-57	168.0	0.0	27.5	19,964.8		
1957-58	175.0	0.0	18.4	13,371.4		
1958-59						
1959-60						
1960-61						
1961-62	153.0	0.0	44.3	31,825.0		
1962-63	137.0	0.0	12.5	9,121.4		
1963-64						
1964-65						
1965-66						
1966-67						
1967-68						
1968-69						
1969-70						
1970-71						
1971-72						
1972-73						
1973-74						
1974-75	145.0	0.0	46.8	33,879.9		
1975-76	169.0	0.0	27.1	19,669.7		
1976-77	138.0	0.0	7.8	5,640.8	Jan 05	182
1977-78	165.0	0.0	33.5	24,287.8	Sep 05	188
1978-79	184.0	0.0	63.6	46,015.3	Aug 04	187
1979-80	165.0	0.0	24.1	17,523.8	Oct 20	188
1980-81	134.0	0.0	67.9	49,193.1	Jan 11	185
1981-82	127.0	0.0	31.4	22,760.1	Oct 01	161
1982-83	91.6	0.0	7.9	5,750.1	Jan 16	94
1983-84	84.9	0.0	14.4	4,341.2	Dec 16	110
1984-85	150.0	0.0	52.5	38,014.2	Mar 27	185
1985-86	183.0	0.0	16.5	11,946.2	Jan 25	190
1986-87	177.0	0.0	67.3	48,538.7	Mar 18	233
1987-88	178.0	0.0	40.3	29,307.8	May 24	184
1988-89	192.0	0.0	80.4	58,223.0	Jan 19	201

M	Data Missing
*	Record incomplete
E	Estimate
N.D.	Not determined
**	Record not Computed
+	Less than 0.05 Acre Feet or less than 0.05 CFS, but greater than 0

RUNOFF – STREAM GAGING STATION PEAK FLOW

RIO HONDO BYPASS - Zone One Ditch
STATION NO. F313B-R

Season	Daily CFS			Total Runoff (Acre-feet)	Peak Inflow	
	Maximum	Minimum	Mean		Date	CFS
1989-90	193.0	0.0	78.4	56,728.9	Jan 25	271
1990-91	174.0	0.0	27.8	20,195.3	Oct 01	189
1991-92	116.0	0.0	24.3	17,613.2	Feb 12	360
1992-93	165.0	0.0	29.3	21,194.8	Feb 18	355
1993-94	155.0	1.3	48.6	35,157.8	Jan 25	203
1994-95	136.0	0.0	15.5	11,241.5	Jan 10	359
1995-96	111.0	0.0	30.6	22,231.9	Feb 20	318
1996-97*	184.0	0.0	34.6	25,060.8	Jun 13	200
1997-98	200.0	0.0	31.6	22,864.6	May 05	214
1998-99	122.0	0.0	35.7	25,854.0	Jan 27	216
1999-00*	182.0	0.0	51.8	37,608.9	May 11	192
2000-01	159.0	0.0	23.7	17,130.0	Apr 07	178

M	Data Missing
*	Record incomplete
E	Estimate
N.D.	Not determined
**	Record not Computed
+	Less than 0.05 Acre Feet or less than 0.05 CFS, but greater than 0

RUNOFF – STREAM GAGING STATION PEAK FLOW

RUBIO DIVERSION CHANNEL *below* Gooseberry Inlet
STATION NO. F338-R

Season	Daily CFS			Total Runoff (Acre-feet)	Peak Inflow	
	Maximum	Minimum	Mean		Date	CFS
1959-60	.8	.0	.0	9.0	Jan 11	9
1960-61	.8	.0	.0	6.0	Jan 26	5
1961-62	7.9	.0	.1	62.0	Feb 11	22
1962-63	2.6	.0	.0	20.0	Feb 10	32
1963-64	.8	.0	.0	14.0	Jan 21	8
1964-65	1.0	.0	.0	30.0	Nov 09	21
1965-66	18.3	.0	.3	206.0	Dec 29	63
1966-67	12.5	.0	.2	127.0	Jan 22	63
1967-68	18.2	.0	.2	112.0	Nov 19	267
1968-69	254.0	.0	4.2	3,050.0	Jan 25	880
1969-70	11.7	.0	.4	272.0	Feb 28	146
1970-71	36.0	.0	.6	413.0	Nov 29	266
1971-72	M	M	M	M		M
1972-73	58.0	+	1.5	1,098.0	Jan 18	114
1973-74	22.6	+	2.8	1,994.0	Nov 18	76
1974-75	11.0	+	.9	627.0	Mar 06	85
1975-76	13.0	.0	.6	431.0	Feb 09	88
1976-77	4.8	.0	.5	384.0	May 09	47
1977-78	76.3	.0	3.0	2,141.0	Mar 04	276
1978-79	5.0	.0	.7	494.0	Mar 28	71
1979-80	108.0	.2	8.9	6,438.0	Feb 19	1,400
1980-81	13.3	.4	3.6	2,598.0	May 02	115
1981-82	20.7	.0	2.1	1,519.0	Apr 01	106
1982-83	150.0	.2	3.1	2,391.0		296
1983-84	16.5	.0	1.0	740.0	Oct 04	184
1984-85	9.8	.0	.5	332.0	Jan 18	31
1985-86	8.2	.0	7.8	463.0		N.D.
1986-87	NO RECORD					
1987-88	9.0	.0	.7	526.0		N.D.
1988-89	6.0	.0	.9	631.0	Mar 25	6
1989-90	5.2	.0	.3	232.0		N.D.
1990-91	16.3	.0	.3	249.0	Mar 01	16
1991-92	45.4	.0	2.2	1,592.0	Feb 10	191
1992-93	*	*	*	*		*
1993-94	*	*	*	*		*
1994-95	71.6	.0	2.8	2,056.0	Feb 14	170

M	Data Missing
*	Record incomplete
E	Estimate
N.D.	Not determined
**	Record not Computed
+	Less than 0.05 Acre Feet or less than 0.05 CFS, but greater than 0

RUNOFF – STREAM GAGING STATION PEAK FLOW

RUBIO DIVERSION CHANNEL *below* Gooseberry Inlet
STATION NO. F338-R

Season	Daily CFS			Total Runoff (Acre-feet)	Peak Inflow	
	Maximum	Minimum	Mean		Date	CFS
1995-96	41.2	.0	1.6	1,139.0	Feb 20	131
1996-97	5.8	.0	.8	601.0	Sep 25	31
1997-98	9.8	.0	1.5	1,050.0	Mar 02	106
1998-99	27.0	.0	1.4	1,030.0	Mar 15	179
1999-00	6.0	.2	.5	360.0	Feb 16	94
2000-01	37.0	0.0	1.1	822.0	Jan 11	179

M	Data Missing
*	Record incomplete
E	Estimate
N.D.	Not determined
**	Record not Computed
+	Less than 0.05 Acre Feet or less than 0.05 CFS, but greater than 0

RUNOFF – STREAM GAGING STATION PEAK FLOW

RUBIO WASH @ Glendon Way
STATION NO. F82C-R

Season	Daily CFS			Total Runoff (Acre-feet)	Peak Inflow	
	Maximum	Minimum	Mean		Date	CFS
1930-31	107.0	.0	1.5	1,110.0	Feb 03	1,690
1931-32	124.0	.0	2.1	1,490.0	Nov 27	798
1932-33	234.0	.0	1.5	1,110.0	Jan 16	1,510
1933-34	684.0	.0	3.6	2,580.0	Dec 31	2,070
1934-35	134.0	.0	2.4	1,770.0	Oct 17	1,680
1935-36	81.0	.0	1.8	1,280.0	Feb 22	1,370
1936-37	186.0	.0	3.9	2,800.0	Dec 27	1,180
1937-38	802.0	.0	5.8	4,180.0	Mar 02	2400E
1938-39	250.0	.0	8.7	2,370.0	Jan 05	1,725
1939-40	122.0	.0	2.4	1,270.0	Jan 07	1,000
1940-41	200.0	.0	8.1	5,890.0	Mar 03	1,940
1941-42	130.0	.0	2.1	1,530.0	Dec 10	1,200
1942-43	697.0	.0	6.2	4,520.0	Mar 04	2,780
1943-44	393.0	.0	4.4	3,190.0	Feb 22	1,930
1944-45	152.0	.0	2.1	1,540.0	Nov 11	1,780
1945-46	244.0	.0	2.5	1,840.0	Dec 22	1,630
1946-47	233.0	.0	3.2	2,300.0	Nov 13	2,650
1947-48	91.0	.0	1.5	1,080.0	Mar 24	2,090
1948-49	59.0	.0	1.5	1,080.0	Oct 30	530
1949-50	161.0	.0	2.3	1,690.0	Feb 06	1,060
1950-51	80.0	.0	1.4	1,010.0	Jan 11	2,290
1951-52	335.0	.0	7.3	5,300.0	Jan 16	3,020
1952-53	133.0	.0	2.0	1,460.0	Nov 15	2,200
1953-54	288.0	+	3.4	2,490.0	Jan 19	2,310
1954-55	126.0	+	2.6	1,870.0	Jan 18	1,290
1955-56	639.0	.0	4.0	2,880.0	Jan 26	1,970
1956-57	199.0	+	3.2	2,290.0	Feb 23	2,980
1957-58	286.0	.1	7.7	5,610.0	Feb 19	2,740
1958-59	218.0	.2	2.8	2,030.0	Jan 06	2,780
1959-60	135.0	.2	2.5	1,820.0	Jan 11	985
1960-61	117.0	.2	1.8	1,270.0	Nov 06	902
1961-62	281.0	.1	5.7	4,120.0	Jan 20	1,200
1962-63	246.0	.1	2.4	1,760.0	Feb 09	1,180
1963-64	136.0	.2	2.6	1,870.0	Jan 21	1,570
1964-65	164.0	.1	2.8	2,030.0	Apr 09	2,045
1965-66	466.0	.1	6.4	4,650.0	Nov 24	2,300

M	Data Missing
*	Record incomplete
E	Estimate
N.D.	Not determined
**	Record not Computed
+	Less than 0.05 Acre Feet or less than 0.05 CFS, but greater than 0

RUNOFF – STREAM GAGING STATION PEAK FLOW

RUBIO WASH @ Glendon Way
STATION NO. F82C-R

Season	Daily CFS			Total Runoff (Acre-feet)	Peak Inflow	
	Maximum	Minimum	Mean		Date	CFS
1966-67	344.0	.2	7.2	5,220.0	Dec 03	2,040
1967-68	343.0	.2	4.0	2,930.0	Mar 08	2,460
1968-69	712.0	.2	11.4	8,220.0	Jan 25	2,890
1969-70	**	**	**	**	Feb 28	2,540
1970-71	**	**	**	**	Nov 29	3,700
1971-72	**	**	**	**	Dec 24	1,240
1972-73	410.0	.0	7.0	5041*	Feb 11	3,166
1973-74	460.0	.2	5.5	3,950.0	Jan 07	1,985
1974-75	328.0	.3	4.5	3,240.0	Dec 04	3,180
1975-76	373.0	.2	4.1	2,920.0	Sep 10	2,070
1976-77	180.0	.1	4.4	3,187.0	Oct 23	2,610
1977-78	531.0	.0	12.9	9,340.0	Feb 10	3,170
1978-79	176.0	.0	8.4	6,056.0	Feb 21	2,680
1979-80	781.0	.0	11.8	8,372.0	Jan 29	4,594
1980-81	205.0	.0	4.3	3,108.0	Mar 01	1,754
1981-82	186.0	.0	4.0	2,890.0	Mar 17	1,650
1982-83	620.0	.1	12.6	9,079.0	Mar 02	4,560
1983-84	165.0	.1	2.8	1,976.0	Dec 25	1,680
1984-85	154.0	.1	3.5	2,543.0	Dec 19	1,610
1985-86	212.0	.1	6.1	4,445.0	Mar 08	2,090
1986-87	153.0	.2	3.6	2,580.0	Oct 02	2,790
1987-88	246.0	.0	4.3	3,113.0	Dec 04	3,620
1988-89	123.0	.1	2.9	2,122.0	Dec 15	783
1989-90	341.0	.3	4.5	3,249.0	Jan 16	1,560
1990-91	355.0	.0	4.9	3,513.0	Mar 01	1,840
1991-92	287.0	.0	5.7	4,115.0	Feb 12	2,540
1992-93	323.0	.0	7.9	5,726.0	Jan 14	3,660
1993-94	105.0	.0	2.3	1,640.0	Mar 24	1,970
1994-95	707.0	.0	9.4	6,777.0	Mar 11	4,610
1995-96	656.0	.0	7.5	5,464.0	Jan 31	5,010
1996-97	156.0	.0	3.9	2,790.0	Jan 15	1,180
1997-98	438.0	.0	9.1	6,590.0	Feb 06	4,030
1998-99	79.0	.0	2.2	1,560.0	Nov 28	2,430
1999-00	218.0	.1	5.6	4,030.0	Feb 21	2,710
2000-01	249.0	0.6	5.7	4,120	Jan 11	1,670

M	Data Missing
*	Record incomplete
E	Estimate
N.D.	Not determined
**	Record not Computed
+	Less than 0.05 Acre Feet or less than 0.05 CFS, but greater than 0

RUNOFF – STREAM GAGING STATION PEAK FLOW

SAN DIMAS CREEK *below* San Dimas Dam
STATION NO. F303-R

Season	Daily CFS			Total Runoff (Acre-feet)	Peak Inflow	
	Maximum	Minimum	Mean		Date	CFS
1951-52	171.0	0.0	6.4	4,661.2	Mar 16	292
1952-53	6.1	0.1	1.5	1,115.5	Jul 06	8
1953-54	61.0	0.0	2.1	1,539.0	Jan 25	161
1954-55	6.1	0.0	0.8	563.3	Nov 16	175
1955-56	40.0	0.0	1.1	816.1	Jan 26	54
1956-57	5.0	0.0	0.6	435.2		5
1957-58	220.0	0.0	9.1	6,525.2	Apr 03	270
1958-59	19.0	0.0	1.8	1,260.9	Feb 18	20
1959-60	5.9	0.0	0.7	483.5	Aug 25	6
1960-61	17.1	0.0	0.4	292.3	Aug 01	20
1961-62	136.0	0.0	3.9	2,728.0	Dec 03	215
1962-63	83.0	0.0	1.5	1,104.3	Feb 09	404
1963-64	24.0	0.0	1.0	752.3		
1964-65	49.0	0.1	1.7	1,195.6	Apr 09	133
1965-66	242.0	0.1	8.8	6,332.0	Nov 23	500
1966-67	516.0	0.0	15.9	11,533.9	Dec 06	1,190
1967-68						
1968-69						
1969-70						
1970-71						
1971-72						
1972-73						
1973-74						
1974-75	18.0	0.2	2.2	1,565.2	May 13	37
1975-76	9.3	0.1	1.3	926.3	Mar 22	14
1976-77	26.0	0.0	1.6	1,135.1	Apr 06	58
1977-78	703.0	0.0	0.8	18,359.4	Mar 04	938
1978-79	227.0	0.2	0.3	7,354.5	Mar 28	102
1979-80	894.0	0.1	0.0	0.0		
1980-81	26.1	0.3	4.4	3,216.6	Dec 01	27
1981-82	100.0	0.1	5.1	3,700.6	Mar 17	201
1982-83	5,840.0	0.4	24.0	17,376.2	Mar 01	883
1983-84	37.0	0.2	6.0	4,322.4	Feb 28	54
1984-85	48.2	0.4	3.5	2,561.1	Jun 04	51
1985-86	56.3	0.0	3.3	2,415.3		
1986-87	9.3	0.0	0.9	616.1	Jan 04	23

M	Data Missing
*	Record incomplete
E	Estimate
N.D.	Not determined
**	Record not Computed
+	Less than 0.05 Acre Feet or less than 0.05 CFS, but greater than 0

RUNOFF – STREAM GAGING STATION PEAK FLOW

SAN DIMAS CREEK *below* San Dimas Dam
STATION NO. F303-R

Season	Daily CFS			Total Runoff (Acre-feet)	Peak Inflow	
	Maximum	Minimum	Mean		Date	CFS
1987-88	31.0	0.4	1.7	1,253.2		
1988-89	98.7	0.1	2.0	1,400.9	May 10	248
1989-90	50.2	0.0	0.5	365.0	Jun 08	199
1990-91	20.1	0.1	3.2	2,352.0	Oct 23	230
1991-92	136.0	0.0	5.3	3,830.5	Mar 24	150
1992-93	587.0	0.3	33.7	24,415.1	Jan 18	651
1993-94	22.2	0.3	3.3	2,389.3	Oct 27	130
1994-95	177.0	0.4	14.0	10,127.2	Mar 06	248
1995-96	73.1	0.5	5.7	4,111.1	Feb 22	78
1996-97	100.0	0.2	4.1	2,976.6	Apr 01	107
1997-98	271.0	0.4	16.3	11,836.8	Feb 24	452
1998-99	64.0	0.0	5.1	3,723.6	May 20	104
1999-00*	7.4	0.0	0.6	457.4	Jun 26	36
2000-01	41.0	0.0	2.2	1,570.0	May 15	293

M	Data Missing
*	Record incomplete
E	Estimate
N.D.	Not determined
**	Record not Computed
+	Less than 0.05 Acre Feet or less than 0.05 CFS, but greater than 0

RUNOFF – STREAM GAGING STATION PEAK FLOW

SAN DIMAS WASH *below* Puddingstone Diversion
STATION NO. F218-R

Season	Daily CFS			Total Runoff (Acre-feet)	Peak Inflow	
	Maximum	Minimum	Mean		Date	CFS
1945-46	22.0	0.0	0.3	246.7	Apr 04	42
1946-47	9.8	0.0	0.7	483.6	Dec 27	10
1947-48						
1948-49						
1949-50						
1950-51						
1951-52	23.0	0.0	1.1	781.1	Mar 17	23
1952-53						
1953-54	12.2	0.0	0.3	244.0	Feb 14	12
1954-55						
1955-56	8.4	0.0	0.1	92.6	Jan 27	16
1956-57						
1957-58	12.0	0.0	1.6	1,112.5	Mar 28	19
1958-59	5.4	0.0	0.1	48.8	Feb 12	8
1959-60						
1960-61	14.4	0.0	0.1	72.4	Jul 21	15
1961-62	3.4	0.0	0.1	50.8	Apr 06	43
1962-63	9.7	0.0	0.4	286.0	Oct 25	16
1963-64	16.9	0.0	0.1	67.2	Apr 10	46
1964-65	18.5	0.0	0.5	334.0	May 11	35
1965-66	34.0	0.0	4.6	3,329.7	Jan 04	35
1966-67	11.8	0.0	2.9	2,097.7	Feb 13	44
1967-68						
1968-69						
1969-70						
1970-71						
1971-72						
1972-73						
1973-74						
1974-75	18.5	0.0	1.1	785.9	Feb 18	30
1975-76	10.2	0.0	0.5	332.8	Mar 01	11
1976-77	16.8	0.0	0.0	0.0		
1977-78	31.6	0.0	9.1	6,621.4	Apr 28	41
1978-79	18.0	0.0	0.2	4,827.2	Dec 19	22
1979-80	26.5	0.0	6.9	4,966.2	Mar 29	28
1980-81	20.3	0.0	2.6	1,879.3	Feb 04	25

M	Data Missing
*	Record incomplete
E	Estimate
N.D.	Not determined
**	Record not Computed
+	Less than 0.05 Acre Feet or less than 0.05 CFS, but greater than 0

RUNOFF – STREAM GAGING STATION PEAK FLOW

SAN DIMAS WASH *below* Puddingstone Diversion
STATION NO. F218-R

Season	Daily CFS			Total Runoff (Acre-feet)	Peak Inflow	
	Maximum	Minimum	Mean		Date	CFS
1981-82	27.0	0.0	3.4	2,445.6	Dec 09	40
1982-83	35.4	0.0	0.4	8,301.6	May 12	37
1983-84	22.3	0.0	0.1	2,884.2		
1984-85	21.0	0.0	1.8	1,281.9	Dec 27	22
1985-86	42.7	0.0	1.4	994.7	Mar 17	44
1986-87	6.9	0.0	0.5	702.5	Jan 05	16
1987-88	11.9	0.0	1.0	774.3	Jul 05	16
1988-89	13.8	0.0	1.0	691.2	Feb 04	16
1989-90	14.1	0.0	0.2	126.5	Jun 11	20
1990-91	19.1	0.0	2.8	2,012.0	Mar 06	21
1991-92	14.6	0.0	3.3	2,375.0	Apr 20	18
1992-93	19.1	0.0	4.5	3,225.0	Jan 11	27
1993-94	14.7	0.0	2.1	1,497.0	Feb 22	15
1994-95	21.1	0.0	7.7	5,554.0	Mar 30	24
1995-96	33.7	0.0	3.5	2,573.0	Feb 21	41
1996-97	35.0	0.0	2.7	1,980.0	Jan 28	36
1997-98	33.0	0.0	5.5	3,960.0	Feb 08	37
1998-99	25.0	0.0	1.8	1,290.0	Apr 22	30
1999-00	35.0	0.0	0.8	553.0	Jun 14	39
2000-01	27.0	0.0	1.1	819.0	Jun 03	29

M	Data Missing
*	Record incomplete
E	Estimate
N.D.	Not determined
**	Record not Computed
+	Less than 0.05 Acre Feet or less than 0.05 CFS, but greater than 0

RUNOFF – STREAM GAGING STATION PEAK FLOW

SAN GABRIEL RIVER *below* Santa Fe Dam
STATION NO. E281-R

Season	Daily CFS			Total Runoff (Acre-feet)	Peak Inflow	
	Maximum	Minimum	Mean		Date	CFS
1942-43	6,700.0	0.0	242.0	175,100.0	Jan 23	8,000
1943-44	2,550.0	0.0	133.0	96,890.0	Feb 22	3,480
1944-45	783.0	0.0	14.0	10,140.0	Feb 02	960
1945-46	1,140.0	0.0	45.0	32,560.0	Dec 23	1,600
1946-47	2,550.0	0.0	53.3	38,600.0	Dec 31	2,580
1947-48	809.0	0.0	11.2	8,120.0	Jun 04	822
1948-49	0.0	0.0	0.0	0.0		
1949-50	0.0	0.0	0.0	0.0		
1950-51	0.0	0.0	0.0	0.0		
1951-52	838.0	0.0	45.2	32,800.0	Jan 17	861
1952-53	488.0	0.0	23.5	16,990.0	Oct 30	598
1953-54	0.0	0.0	0.0	0.0		
1954-55	0.0	0.0	0.0	0.0		
1955-56	0.0	0.0	0.0	0.0		
1956-57	0.0	0.0	0.0	0.0		
1957-58	944.0	0.0	126.0	91,530.0	Apr 05	1,210
1958-59	342.0	0.0	12.4	9,000.0	Feb 24	606
1959-60	3.3	0.0	0.2	15.0	Feb 02	7
1960-61	0.0	0.0	0.0	0.0		
1961-62	437.0	0.0	46.2	33,450.0	Feb 13	728
1962-63	0.0	0.0	0.0	0.0		
1963-64	24.0	0.1	1.0	754.0		
1964-65	0.0	0.0	0.0	0.0		
1965-66	6,000.0	0.0	133.0	96,200.0	Nov 23	11,000
1966-67	597.0	0.0	62.1	44,930.0	Mar 23	614
1967-68	2.8	0.0	+	5.5	Nov 29	30
1968-69	26,000.0	0.0	540.0	391,200.0	Jan 26	30,900
1969-70	263.0	0.0	13.3	9,600.0	Mar 04	458
1970-71	116.0	0.0	6.5	4,721.5	Dec 17	116
1971-72	12.0	0.0	0.2	182.0	Dec 12	25
1972-73	310.0	0.0	32.6	23,330.8	Mar 22	340
1973-74	85.0	0.0	1.4	1,007.4	Apr 15	146
1974-75	No Data	from 1975	to 1998			
1998-99	251.0	0.0	7.2	5,240.0		N.D.
1999-00	61.0	0.0	7.4	5,380.0	May 12	129
2000-01	129.0	0.0	0.8	611.0	Feb 12	306

M	Data Missing
*	Record incomplete
E	Estimate
N.D.	Not determined
**	Record not Computed
+	Less than 0.05 Acre Feet or less than 0.05 CFS, but greater than 0

RUNOFF – STREAM GAGING STATION PEAK FLOW

SAN GABRIEL RIVER *below* Valley Blvd.
STATION NO. F261C-R

Season	Daily CFS			Total Runoff (Acre-feet)	Peak Inflow	
	Maximum	Minimum	Mean		Date	CFS
1938-39	125.0	0.4	8.0	5,790		N.D.
1939-40	125E	0.2	1.8	1,320		N.D.
1940-41	1,300.0	0.2	73.9	53,500		N.D.
1941-42	4.0	0.0	2.2	1,560		N.D.
1942-43	8,000.0	0.0	221.0	160,300	Jan 23	9,350
1943-44	2,720.0	0.6	83.0	60,290	Feb 22	5,950
1944-45	650.0	0.1	10.5	7,570		N.D.
1945-46	990.0	0.0	11.9	8,640	Dec 23	1,470
1946-47	2,400.0	0.0	30.3	21,940		N.D.
1947-48	0.0	0.0	0.0	0.0		0
1948-49	0.0	0.0	0.0	0.0		0
1949-50	0.0	0.0	0.0	0.0		0
1950-51	0.0	0.0	0.0	0.0		0
1951-52	NO RECORD					
1952-53	NO RECORD					
1953-54	NO RECORD					
1954-55	NO RECORD					
1955-56	NO RECORD					
1956-57	NO RECORD					
1957-58	NO RECORD					
1958-59	NO RECORD					
1959-60	NO RECORD					
1960-61	306.0	0.0	*	34500*	Jan 26	1,200
1961-62	1,000.0	0.0	193.0	139,500	Nov 20	7,500
1962-63	566.0	0.0	78.6	56,900	Mar 16	3,500
1963-64	358.0	0.0	70.6	51,290	Jan 22	2,500E
1964-65	792.0	0.0	123.0	89,150	Apr 09	5,890
1965-66	5,960.0	0.0	164.0	118,600	Nov 23	11,300
1966-67	1,440.0	0.0	66.3	48,000	Jan 24	7,880
1967-68	1,060.0	0.0	26.3	19,060	Mar 08	6,500
1968-69	23,900.0	0.0	591.0	428,000	Jan 25	40,000E
1969-70	782.0	0.0	60.6	43,870	Feb 28	4,470
1970-71	964.0	0.0	78.0	56,430	Dec 21	2,970
1971-72	1,000.0	0.0	4.7	34,140	Dec 24	5,120
1972-73	1,210.0	0.0	130.0	93,880	Jan 16	5,810
1973-74	1,520.0	0.0	127.0	92,070	Jan 07	3,340

M	Data Missing
*	Record incomplete
E	Estimate
N.D.	Not determined
**	Record not Computed
+	Less than 0.05 Acre Feet or less than 0.05 CFS, but greater than 0

RUNOFF – STREAM GAGING STATION PEAK FLOW

SAN GABRIEL RIVER *below* Valley Blvd.
STATION NO. F261C-R

Season	Daily CFS			Total Runoff (Acre-feet)	Peak Inflow	
	Maximum	Minimum	Mean		Date	CFS
1974-75	812.0	0.0	62.2	45,000	Dec 04	8,610
1975-76	516.0	0.0	70.4	50,920	Sep 10	2,690
1976-77	717.0	0.0	29.7	21,523	Jan 03	5,458
1977-78	16,500.0	0.0	471.0	340,714	Mar 05	25,700
1978-79	1,190.0	0.0	114.7	83,030	Mar 27	7,800
1979-80	11,870.0	0.0	326.9	245,503		N.D.
1980-81	850.0	0.0	24.4	17,694	Jan 29	4,200
1981-82	1,480.0	0.0	62.4	45,186	Mar 14	6,720
1982-83	19,000.0	0.0	269.4	195,060	Mar 02	24,100
1983-84	879.0	0.0	44.4	32,212	Oct 01	4,980
1984-85	511.0	0.0	64.1	46,405	Dec 16	5,160
1985-86	893.0	0.0	51.7	37,446	Mar 08	7,350
1986-87	1,040.0	0.0	67.4	48,808	Jan 04	3,770
1987-88	1,000.0	0.0	54.6	39,646	Dec 04	7,260
1988-89	704.0	0.0	65.2	47,221	Dec 21	4,110
1989-90	1,450.0	0.0	57.1	41,313	Feb 17	3,640
1990-91	1,470.0	0.0	29.3	21,023	Mar 01	4,690
1991-92	2,150.0	0.0	36.5	26,484	Feb 12	15,100
1992-93	10,400.0	0.0	458.0	331,800	Feb 19	17,200
1993-94	379.0	0.0	8.7	6,279	Mar 24	3,740
1994-95	*	*	*	*		*
1995-96	Discontin	11/95.				
1996-97	Unreliable	data due	to inflate	rubber dam		
1997-98	Unreliable	data due	to inflate	rubber dam		
1998-99	Unreliable	data due	to inflate	rubber dam		
2000-01	Unreliable	data due	to inflate	rubber dam		

M	Data Missing
*	Record incomplete
E	Estimate
N.D.	Not determined
**	Record not Computed
+	Less than 0.05 Acre Feet or less than 0.05 CFS, but greater than 0

RUNOFF – STREAM GAGING STATION PEAK FLOW

SAN GABRIEL RIVER *below* Cogswell Dam
STATION NO. F209-R

Season	Daily CFS			Total Runoff (Acre-feet)	Peak Inflow	
	Maximum	Minimum	Mean		Date	CFS
1933-34	1,758.4	0.0	12.5	9,140.1	Jan 01	4,401
1934-35	594.0	0.1	27.5	19,700.6	Dec 13	1,260
1935-36	43.0	0.2	9.8	7,088.5	Feb 17	45
1936-37	577.0	0.1	46.9	33,585.1	Feb 14	752
1937-38	6,620.0	0.7	80.2	58,918.4	Mar 02	25,000
1938-39	683.0	0.4	15.7	11,358.9	Sep 25	1,190
1939-40	141.0	0.6	13.0	9,373.6	Jan 15	1,240
1940-41	1,130.0	0.5	83.7	59,817.1	Feb 22	1,160
1941-42	76.0	1.0	9.3	7,294.0	Nov 01	90
1942-43	4,775.0	0.6	75.8	54,926.9	Feb 23	7,300
1943-44	805.0	2.2	52.2	37,701.6	Dec 28	1,210
1944-45	144.0	0.8	14.6	10,411.2	Nov 20	157
1945-46	602.0	0.8	22.7	16,477.5	Mar 30	814
1946-47	1,110.0	0.1	27.9	20,245.4	Jan 06	1,240
1947-48	28.0	0.1	4.8	3,045.2	May 17	79
1948-49	12.3	0.1	4.5	2,775.3	Jul 21	67
1949-50	12.7	0.1	4.9	3,551.8	Mar 02	84
1950-51	10.6	0.2	0.8	576.0	Oct 24	52
1951-52	1,240.0	0.1	35.4	25,874.4	Jan 18	2,000
1952-53	289.0	0.1	17.0	12,479.1	Jan 09	328
1953-54	144.0	0.1	10.5	7,551.7	Jan 26	146
1954-55	36.0	0.1	4.4	3,193.4	Oct 04	149
1955-56	15.6	0.1	5.0	3,626.0		
1956-57	139.0	0.1	5.3	3,789.0	Nov 09	260
1957-58	1,170.0	0.1	48.3	34,530.8	Apr 04	1,430
1958-59	120.0	0.2	8.8	6,244.7	Feb 16	124
1959-60	13.0	0.1	2.8	2,018.1	Jan 29	260
1960-61	5.6	0.1	0.8	579.2	Jan 11	336
1961-62	1,810.0	0.1	34.5	23,810.6	Feb 11	2,370
1962-63						
1963-64	30.0	0.1	3.7	2,661.4	Jun 24	788
1964-65	47.0	0.1	5.8	4,170.0	Apr 09	53
1965-66	1,120.0	0.3	56.9	41,365.3	Nov 22	2,570
1966-67	1,040.0	0.3	45.1	32,757.2	Dec 06	2,460
1967-68						
1968-69						

M	Data Missing
*	Record incomplete
E	Estimate
N.D.	Not determined
**	Record not Computed
+	Less than 0.05 Acre Feet or less than 0.05 CFS, but greater than 0

RUNOFF – STREAM GAGING STATION PEAK FLOW

SAN GABRIEL RIVER *below* Cogswell Dam
STATION NO. F209-R

Season	Daily CFS			Total Runoff (Acre-feet)	Peak Inflow	
	Maximum	Minimum	Mean		Date	CFS
1969-70						
1970-71						
1971-72						
1972-73						
1973-74						
1974-75	34.0	2.0	11.5	8,299.4	Oct 24	34
1975-76	32.7	2.0	6.9	4,998.9	Sep 15	33
1976-77	29.4	1.4	6.9	5,021.0	Oct 02	30
1977-78	3,550.0	1.9	3.9	86,060.2	Mar 04	8,780
1978-79	495.0	2.3	33.3	24,094.0	Mar 27	510
1979-80	1,920.0	2.5	81.5	33,672.8	Feb 19	2,760
1980-81	235.0	0.4	10.6	7,704.0	Apr 13	1,330
1981-82	1,110.0	0.4	12.5	9,059.1	Mar 23	3,910
1982-83	3,470.0	5.3	3.5	78,268.4	Mar 02	4,680
1983-84	115.0	4.4	0.6	12,496.7	Dec 28	190
1984-85	93.9	1.3	8.8	6,352.3	Jan 09	102
1985-86	535.0	4.6	21.2	15,314.4	Mar 19	1,140
1986-87	62.3	2.8	91.3	2,806.6	Nov 12	619
1987-88	202.0	2.3	19.7	11,249.1	Jan 27	756
1988-89	39.4	2.1	7.5	4,680.6	Feb 24	63
1989-90	7.2	1.4	2.4	1,717.7		
1990-91	390.0	1.0	15.3	10,933.5	Apr 03	417
1991-92	1,770.0	0.1	47.5	34,449.0	Feb 12	M
1992-93	1,360.0	1.0	109.0	79,250.8	Jan 14	1,550
1993-94	84.9	1.0	14.3	10,319.0	Dec 02	86
1994-95	951.0	0.5	56.7	41,044.0	Jan 10	1,740
1995-96	466.0	0.1	14.6	10,600.1	Feb 21	938
1996-97	335.0	0.1	11.2	8,084.8	Jan 22	651
1997-98	1,760.0	4.7	57.2	41,406.4	Feb 24	2,590
1998-99	184.0	2.5	17.2	12,430.8	Dec 01	935
1999-00	14.0	0.5	7.4	5,400.0	Feb 20	47
2000-01	22.0	7.6	14.4	10,410.0	Feb 13	37

M	Data Missing
*	Record incomplete
E	Estimate
N.D.	Not determined
**	Record not Computed
+	Less than 0.05 Acre Feet or less than 0.05 CFS, but greater than 0

RUNOFF – STREAM GAGING STATION PEAK FLOW

SAN GABRIEL RIVER @ Foothill Blvd.
STATION NO. F190-R

Season	Daily CFS			Total Runoff (Acre-feet)	Peak Inflow	
	Maximum	Minimum	Mean		Date	CFS
1931-32	N.D.	.0	N.D.	76220*		N.D.
1932-33	2,530.0	.0	15.7	11,400.0	Jan 19	10,000
1933-34	3,150.0	.0	20.3	14,690.0	Jan 01	5,550
1934-35	448.0	.0	81.7	59,220.0	Apr 08	1,080
1935-36	169.0	.0	21.1	15,300.0	Feb 02	572
1936-37	1,610.0	.0	162.0	117,400.0	Feb 19	2,050
1937-38	22,200.0	.0	387.2	280300*	Mar 02	62000E
1938-39	220.0	.0	15.0	10,850.0	Jan 05	267
1939-40	388.0	.0	13.7	9,980.0	Jun 25	400
1940-41	4,090.0	.0	304.0	220,100.0	Mar 04	5,280
1941-42	312.0	.0	5.5	3,990.0	Apr 20	345
1942-43	10400E	.0	318.0	230,200.0	Feb 23	11,400
1943-44	2,750.0	.0	163.0	118,300.0	Feb 22	4,840
1944-45	844.0	.0	22.9	16,620.0	Feb 02	1,080
1945-46	1,190.0	.0	58.1	42,060.0	Dec 23	1,670
1946-47	3,000.0	.0	65.6	47,520.0	Dec 28	3,200
1947-48	1,010.0	.0	14.3	10,370.0	Jun 02	1,120
1948-49	.0	.0	.0	.0		0
1949-50	20.0	.0	.1	67.0	Dec 18	192
1950-51	.0	.0	.0	.0		0
1951-52	3,860.0	.0	98.1	71,210.0	Jan 18	4,670
1952-53	1,030.0	.0	56.9	41,180.0	Oct 28	1,080
1953-54	848.0	.0	30.3	21,920.0	Apr 16	2,160
1954-55	3.8	.0	+	38.0	Jan 18	12
1955-56	215.0	.0	2.0	1,430.0	Jan 26	800
1956-57	573.0	.0	7.4	5,320.0	Apr 17	585
1957-58	2,270.0	.0	229.0	165,600.0	Apr 05	2,520
1958-59	380.0	.0	18.8	13,590.0	Jan 06	3,390
1959-60	13.0	.0	.7	499.0	Apr 27	90
1960-61	26.0	.0	.2	147.0	Jan 26	48
1961-62	1,750.0	.0	103.0	74,270.0	Feb 12	2,260
1962-63	47.0	.0	.3	237.0	Feb 09	301
1963-64	13.0	.0	.1	66.0	Jan 22	56
1964-65	293.0	.0	11.0	7,940.0	Sep 06	881
1965-66	8,680.0	.0	240.0	173,700.0	Nov 23	9,420
1966-67	2,080.0	.0	249.0	180,000.0	Dec 06	9,830

M	Data Missing
*	Record incomplete
E	Estimate
N.D.	Not determined
**	Record not Computed
+	Less than 0.05 Acre Feet or less than 0.05 CFS, but greater than 0

RUNOFF – STREAM GAGING STATION PEAK FLOW

SAN GABRIEL RIVER @ Foothill Blvd.
STATION NO. F190-R

Season	Daily CFS			Total Runoff (Acre-feet)	Peak Inflow	
	Maximum	Minimum	Mean		Date	CFS
1967-68	232.0	.0	33.0	23,940.0	Nov 25	326
1968-69	22,700.0	.0	794.0	575,300.0	Jan 26	
1969-70	378.0	.0	32.9	23,810.0	Dec 21	411
1970-71	1,300.0	.0	44.0	31,850.0	Mar 01	1,400
1971-72	254.0	.0	13.3	9,660.0	Dec 08	254
1972-73	803.0	.0	129.0	93,260.0	Feb 11	1,010
1973-74	374.0	.0	56.2	40,640.0	Jan 07	670
1974-75	256.0	.0	37.3	27,040.0		256
1975-76	179.0	.0	27.3	19,839.0	Mar 01	226
1976-77	226.0	.0	24.6	17,770.0	Oct 14	248
1977-78	*	*	664.2	480,390.0	Mar 04	24,300
1978-79	525.0	.0	153.0	110,800.0	Mar 27	720
1979-80	8,751.0	.0	440.0	313,199.0		N.D.
1980-81	362.0	.0	23.8	17,247.0	Jan 29	477
1981-82	573.0	.1	79.8	57,237.0	Mar 14	720
1982-83	12,810.0	.0	16.1	356,249.0	Mar 02	12,810
1983-84	432.0	1.8	50.9	36,846.0		N.D.
1984-85	396.0	.0	16.7	12,084.0		N.D.
1985-86	805.0	.0	117.0	84,632.0	Mar 03	805
1986-87	112.0	.0	31.2	22,594.0	Mar 06	130
1987-88	544.0	.0	62.3	444,868.0	Jun 08	805
1988-89	464.0	.0	49.6	35,849.0	Feb 04	1,130
1989-90	145.0	.0	26.7	19,337.0	Apr 17	155
1990-91	567.0	.0	74.1	52,908.0	Jul 27	578
1991-92	1,580.0	.0	200.0	144,865.0	Feb 15	4,000
1992-93	8,600.0	.0	598.0	432,600.0	Feb 16	11,300
1993-94	393.0	.0	53.4	38,660.0	Feb 17	1,750
1994-95	2,180.0	.0	278.0	201,100.0	Mar 06	5,020
1995-96	531.0	.0	91.7	66,560.0	Oct 06	1,130
1996-97	563.0	.0	62.3	45,100.0	Dec 22	522
1997-98	7,660.0	.0	319.0	230,900.0	Feb 24	11,900
1998-99	216.0	.0	24.9	18.0	Jul 15	326
1999-00	272.0	.0	40.9	29,690.0	May 01	1,150
2000-01	377.0	0.0	45.9	33,220	Dec 13	730

M	Data Missing
*	Record incomplete
E	Estimate
N.D.	Not determined
**	Record not Computed
+	Less than 0.05 Acre Feet or less than 0.05 CFS, but greater than 0

RUNOFF – STREAM GAGING STATION PEAK FLOW

SAN GABRIEL RIVER *above* Florence Avenue
STATION NO. F262C-R

Season	Daily CFS			Total Runoff (Acre-feet)	Peak Inflow	
	Maximum	Minimum	Mean		Date	CFS
1934-35	718.0	0.0	6.5	4,700.0	Oct 17	5,850
1935-36	414.0	0.0	2.4	1,750.0	Feb 12	3,400
1936-37	NO RECORD					
1937-38	NO RECORD					
1938-39	325.0	0.0		2540*	Sep 25	1,380
1939-40	271.0	0.0	2.6	1,900.0	Jan 08	1,150
1940-41	2,390.0	0.0	105.0	75,780.0	Mar 04	5,630
1941-42	117.0	0.0	18.7	13,570.0	Dec 10	413
1942-43	9,190.0	0.0	257.0	186,400.0	Jan 23	14,000
1943-44	4,860.0	0.0	110.0	79,930.0	Feb 22	16,000
1944-45	806.0	0.0	36.1	26,110.0	Nov 12	4,020
1945-46	1,500.0	0.0	22.8	16,480.0	Dec 23	4,370
1946-47	2,880.0	0.0	38.2	27,650.0	Dec 31	3,640
1947-48	0.0	0.0	0.0	0.0		0
1948-49	0.0	0.0	0.0	0.0		0
1949-50	0.0	0.0	0.0	0.0		0
1950-51	0.0	0.0	0.0	0.0		0
1951-52	3,070.0	0.0	33.4	24,250.0	Jan 16	8,040
1952-53	181.0	0.0	1.4	983.0	Dec 02	1,270
1953-54	688.0	0.0	5.2	3,790.0	Feb 13	4,060
1954-55	317.0	0.0	1.4	1,000.0	Jan 18	1,850
1955-56	4,580.0	0.0	14.3	10,360.0	Jan 26	12800E
1956-57	490.0	0.0	1.9	1,390.0	Jan 13	2,040
1957-58	1,720.0	0.0	31.9	23,960.0	Apr 07	6,300
1958-59	826.0	0.0	4.3	3,130.0	Jan 06	4,060
1959-60	377.0	0.0	2.7	1,990.0	Jan 12	2,210
1960-61	316.0	0.0	0.9	678.0	Jan 26	2,940
1961-62	2,170.0	0.0	23.7	17,340.0	Feb 11	6,470
1962-63	1,190.0	0.0	7.1	5,160.0	Mar 16	4,270
1963-64	707.0	0.0	4.8	3,460.0	Nov 20	4,330
1964-65	1,210.0	0.0	12.4	9,010.0	Apr 09	4,900
1965-66	697.0	0.0	7.8	5,620.0	Jan 30	2,080
1966-67	1,900.0	0.0	32.2	23,300.0	Jan 23	4,320
1967-68	NO RECORD					
1968-69	8,430.0	0.0	273.0	197,600.0	Jan 25	10,900
1969-70	1,650.0	0.0	16.5	11,950.0	Mar 04	4,510

M	Data Missing
*	Record incomplete
E	Estimate
N.D.	Not determined
**	Record not Computed
+	Less than 0.05 Acre Feet or less than 0.05 CFS, but greater than 0

RUNOFF – STREAM GAGING STATION PEAK FLOW

SAN GABRIEL RIVER *above* Florence Avenue
STATION NO. F262C-R

Season	Daily CFS			Total Runoff (Acre-feet)	Peak Inflow	
	Maximum	Minimum	Mean		Date	CFS
1970-71	2,160.0	0.0	15.5	11,220.0	Nov 29	4,410
1971-72	1,450.0	0.0	10.2	7,400.0	Dec 24	7,510
1972-73	2,540.0	0.0	28.6	20,700.0	Feb 11	5,680
1973-74	3,650.0	0.0	26.8	19,420.0	Jan 07	5,870
1974-75	1,390.0	0.0	8.4	6,110.0	Dec 04	6,010
1975-76	690.0	0.0	5.9	4,160.0	Sep 10	2,800
1976-77	486.0	0.0	4.4	3,171.0	Jan 03	3,320
1977-78	5,440.0	0.0	224.0	162,158.0	Feb 12	8,220
1978-79	*	*	*	*		*
1979-80	9,290.0	0.0	222.3	156,500.0	Feb 17	10,900
1980-81	219.0	0.0	1.1	773.0	Mar 02	414
1981-82	186.0	0.0	1.0	723.0	Mar 17	755
1982-83	4,920.0	0.0	95.2	68,938.0	Mar 01	10,400
1983-84	131.0	0.0	1.8	1,341.0	Nov 25	179
1984-85	215.0	0.0	2.4	1,771.0	Dec 19	283
1985-86	528.0	0.0	6.4	4,597.0	Sep 25	4,510
1986-87	585.0	0.0	2.7	1,936.0	Jan 04	3,350
1987-88	75.9	0.0	0.6	466.0	Apr 21	327
1988-89	148.0	0.0	1.1	825.0	Dec 25	1,174
1989-90	32.0	0.0	0.1	65.0	Feb 17	353
1990-91	169.0	0.0	1.0	694.0	Mar 27	605
1991-92	673.0	0.0	5.3	3,840.0	Feb 12	2,340
1992-93	6,990.0	0.0	276.0	199,500.0	Jan 18	7,600
1993-94	0.0	0.0	0.0	0.0		
1994-95	1,520.0	0.0	35.6	25,760.0	Jan 10	5,120
1995-96	871.0	0.0	3.8	2,727.0	Feb 21	2,360
1996-97	291.0	0.0	5.1	3,710.0	Dec 11	1,240
1997-98	5,750.0	0.0	168.0	121,400.0	Mar 26	8,070
1998-99	19.0	0.0	0.2	116.0	Nov 08	78
1999-00	159.0	0.0	1.1	788.0	Mar 08	3,130
2000-01	708.0	0.0	4.8	3,480	Jan 11	2,180

M	Data Missing
*	Record incomplete
E	Estimate
N.D.	Not determined
**	Record not Computed
+	Less than 0.05 Acre Feet or less than 0.05 CFS, but greater than 0

RUNOFF – STREAM GAGING STATION PEAK FLOW

SAN GABRIEL RIVER *below* San Gabriel River Parkway
STATION NO. F263C-R

Season	Daily CFS			Total Runoff (Acre-feet)	Peak Inflow	
	Maximum	Minimum	Mean		Date	CFS
1928-29	93.0	.0	3.9	2,850.0	Mar 10	397
1929-30	152.0	.0	4.8	3,490.0	Jan 11	726
1930-31	106.0	.0	3.4	2,490.0	Feb 04	404
1931-32	1,620.0	.0	18.0	13,060.0	Feb 09	3,830
1932-33	286.0	.0	4.2	3,040.0	Jan 29	1,450
1933-34	5,580.0	.0	23.4	16,950.0	Jan 01	22,000
1934-35	746.0	.0	16.8	12,190.0	Oct 17	5,400
1935-36	355.0	.0	6.3	4,590.0	Feb 12	3,400
1936-37	2,440.0	.0	47.3	34240*	Feb 14	6,970
1937-38	11,400.0	.0	131.0	94,810.0	Mar 02	22700E
1938-39	672.0	.0	34.1	24,620.0	Sep 25	2,110
1939-40	544.0	.0	27.8	20,180.0	Feb 01	2,110
1940-41	2,700.0	.0	139.0	100,900.0	Mar 04	5,830
1941-42	149.0	.0	39.5	28,630.0	Dec 10	412
1942-43	10,500.0	.0	289.0	209,600.0	Jan 23	14,810
1943-44	5,350.0	.0	144.0	104,200.0	Feb 22	14,100
1944- 45	744.0	.0	58.7	42,520.0	Nov 12	4,210
1945-46	1,660.0	.0	47.5	34,370.0	Dec 23	4,660
1946-47	2,810.0	.0	62.7	45,420.0	Dec 30	3,240
1947-48	48.0	.0	11.8	8,590.0	Feb 06	84
1948-49	77.0	.0	8.9	6,470.0	Jan 20	144
1949-50	272.0	.0	5.7	4,130.0	Feb 06	845
1950-51	16.0	.0	.8	558.0	Jan 30	27
1951-52	2,860.0	.0	70.2	50,900.0	Jan 16	14,000
1952-53	327.0	.0	19.2	13,880.0	Dec 02	1,450
1953-54	901.0	.0	15.2	10,990.0	Feb 13	5,450
1954-55	323.0	.0	12.8	9,250.0	Jan 18	1,590
1955-56	4,030.0	.0	33.1	24,050.0	Jan 26	12,400
1956-57	558.0	.0	24.9	18,000.0	Mar 01	3,600
1957-58	2,210.0	.0	114.0	82,190.0	Apr 07	6,890
1958-59	777.0	.0	16.9	33,960.0	Jan 06	3,870
1959-60	449.0	.0	49.7	36,100.0	Jan 12	2,390
1960-61	421.0	.0	65.9	47,700.0	Jan 26	1,330
1961-62	2,840.0	.0	142.0	103,100.0	Feb 11	8,810
1962-63	1,080.0	.0	58.6	42,430.0	Mar 17	4,320
1963-64	881.0	.0	63.0	45,700.0	Jan 22	3,380

M	Data Missing
*	Record incomplete
E	Estimate
N.D.	Not determined
**	Record not Computed
+	Less than 0.05 Acre Feet or less than 0.05 CFS, but greater than 0

RUNOFF – STREAM GAGING STATION PEAK FLOW

SAN GABRIEL RIVER *below* San Gabriel River Parkway
STATION NO. F263C-R

Season	Daily CFS			Total Runoff (Acre-feet)	Peak Inflow	
	Maximum	Minimum	Mean		Date	CFS
1964-65	1,410.0	.0	107.0	77,270.0	Apr 09	5,590
1965-66	916.0	.0	76.4	55,320.0	Feb 06	2,670
1966-67	2,270.0	.3	86.7	62,800.0	Jan 23	5,680
1967-68	222.0	3.2	36.2	26,240.0	Nov 19	330
1968-69	10,210.0	15.0	379.0	274,300.0	Jan 26	11,740
1969-70	1,880.0	13.0	109.0	79,110.0	Mar 04	5,530
1970-71	2,170.0	2.6	75.4	54,590.0	Dec 21	4,610
1971-72	1,900.0	.0	45.1	32,740.0	Dec 24	6,970
1972-73	2,540.0	.0	92.6	67,020.0	Feb 11	5,620
1973-74	3,640.0	4.0	83.6	60,500.0	Jan 04	6,170
1974-75	2,050.0	1.0	52.7	38,180.0	Dec 04	7,525
1975-76	1,500.0	.0	44.4	32,000.0		N.D.
1976-77	739.0	.0	23.0	16,670.0	Jan 03	4,080
1977-78	6,630.0	.0	353.4	256,222.0	Mar 01	7,650
1978-79	338.0	2.3	51.0	36,943.0	Jan 15	2,052
1979-80	9,140.0	6.0	283.9	201,315.0	Feb 19	10,600
1980-81	336.0	3.8	33.0	23,902.0	Mar 01	577
1981-82	290.0	.0	32.0	23,162.0	Mar 14	523
1982-83	4,740.0	7.7	163.1	118,084.0	Mar 01	8,650
1983-84	152.0	3.8	30.6	22,254.0	Oct 01	414
1984-85	387.0	3.1	31.1	22,522.0	Dec 18	750
1985-86	598.0	.5	59.4	31,244.0	Sep 25	3,340
1986-87	1,060.0	.0	30.3	21,994.0	Jan 04	5,140
1987-88	559.0	.0	32.7	23,684.0	Apr 20	1,270
1988-89	570.0	.0	28.9	20,899.0	Dec 24	3,020
1989-90	612.0	.0	39.6	28,677.0	Feb 17	947
1990-91	787.0	.0	34.7	24,904.0	Feb 28	1,140
1991-92	1,320.0	.0	42.0	30,460.0	Feb 12	3,390
1992-93	6,460.0	.0	377.0	273,200.0	Jan 18	7,430
1993-94	387.0	.2	35.9	26,000.0	Jan 25	1,520
1994-95	2,470.0	.0	146.0	105,900.0	Mar 11	5,070
1995-96	794.0	1.6	47.8	34,720.0	Jan 31	1,620
1996-97	1,210.0	.7	73.9	53,530.0	Dec 09	2,040
1997-98	5,450.0	2.4	233.0	168,600.0	Feb 23	7,060
1998-99	350.0	.0	41.7	30,200.0	Feb 05	621
1999-00	607.0	.1	58.6	42,560.0	Jun 06	2,550

M	Data Missing
*	Record incomplete
E	Estimate
N.D.	Not determined
**	Record not Computed
+	Less than 0.05 Acre Feet or less than 0.05 CFS, but greater than 0

RUNOFF – STREAM GAGING STATION PEAK FLOW

SAN GABRIEL RIVER *below* San Gabriel River Parkway
STATION NO. F263C-R

Season	Daily CFS			Total Runoff (Acre-feet)	Peak Inflow	
	Maximum	Minimum	Mean		Date	CFS
2000-01	1,240.0	0.0	68.3	49,420	Feb 25	4,620

M	Data Missing
*	Record incomplete
E	Estimate
N.D.	Not determined
**	Record not Computed
+	Less than 0.05 Acre Feet or less than 0.05 CFS, but greater than 0

RUNOFF – STREAM GAGING STATION PEAK FLOW

SAN GABRIEL RIVER *below* Morris Dam
STATION NO. U8-R

Season	Daily CFS			Total Runoff (Acre-feet)	Peak Inflow	
	Maximum	Minimum	Mean		Date	CFS
1895-96	134.0	.0	N.D.	N.D.		N.D.
1896-97	1,760.0	.0	95.6	69,200.0		N.D.
1897-98	1,600.0	.0	9.6	6,920.0		N.D.
1898-99	16.0	.0	.1	74.0		N.D.
1899-00	49.0	.0	.4	272.0		N.D.
1900-01	5,170.0	.0	94.1	68,100.0	Feb 05	N.D.
1901-02	318.0	.0	4.3	3,100.0		6,250
1902-03	2,940.0	.0	104.0	74,900.0		N.D.
1903-04	1,070.0	.0	9.3	6,720.0		N.D.
1904-05	2,940.0	.0	172.0	124,000.0		N.D.
1905-06	7,950.0	.0	262.0	190,000.0		N.D.
1906-07	6,730.0	.0	406.0	293,000.0		N.D.
1907-08	1,160.0	.0	46.4	33,700.0		N.D.
1908-09	7,030.0	.0	197.0	143,000.0		N.D.
1909-10	12,400.0	.0	137.0	99,100.0	Jan 01	13,900
1910-11	9,100.0	.0	321.0	231,000.0	Mar 10	13,500
1911-12	2,950.0	.0	55.5	40,300.0		N.D.
1912-13	1,880.0	.0	25.6	18,600.0		N.D.
1913-14	11,800.0	.0	359.0	260,000.0	Feb 20	18,100
1914-15	1,110.0	.0	108.0	77,900.0	Jan 29	2,770
1915-16	22,300.0	.0	315.0	228,000.0	Jan 18	40,000
1916-17	3,900.0	.0	49.3	35,700.0		N.D.
1917-18	4,940.0	.0	123.0	88,600.0	Mar 17	8,680
1918-19	76.0	.0	3.2	2,290.0	Feb 11	230
1919-20	2,400.0	.0	94.6	68,700.0	Mar 02	5,000
1920-21	2,050.0	.0	40.1	29,000.0	Mar 14	4,000
1921-22	16,000.0	.0	505.0	365,000.0	Dec 19	22,300
1922-23	2,250.0	.0	44.0	31,800.0	Dec 13	3,670
1923-24	253.0	.0	3.5	2,540.0	Mar 26	510
1924-25	588.0	.0	4.2	3,030.0	Mar 04	3,000
1925-26	5,530.0	.0	113.0	81,700.0	Apr 07	14,900
1926-27	11,400.0	.0	123.0	88,900.0	Feb 16	18,200
1927-28	672.0	.0	4.1	2,940.0	Feb 04	1,810
1928-29	411.0	.0	10.0	7,210.0	Mar 10	895
1929-30	396.0	.0	21.5	15,600.0	Mar 15	586
1930-31	601.0	.0	9.5	6,900.0	Apr 26	1,450

M	Data Missing
*	Record incomplete
E	Estimate
N.D.	Not determined
**	Record not Computed
+	Less than 0.05 Acre Feet or less than 0.05 CFS, but greater than 0

RUNOFF – STREAM GAGING STATION PEAK FLOW

SAN GABRIEL RIVER *below* Morris Dam
STATION NO. U8-R

Season	Daily CFS			Total Runoff (Acre-feet)	Peak Inflow	
	Maximum	Minimum	Mean		Date	CFS
1931-32	5,830.0	.0	120.0	87,200.0	Feb 09	7,500
1932-33	1,630.0	.0	21.9	15,900.0	Jan 19	5,820
1933-34	2,380.0	.0	30.4	22,080.0	Jan 01	6,120
1934-35	460.0	.0	102.0	74,080.0	Feb 09	507
1935-36	224.0	.0	31.6	22,980.0	Apr 10	455
1936-37	1,770.0	.0	195.0	141,100.0	Feb 20	1,950
1937-38	21,660.0	.1	415.0	300,200.0	Mar 02	65,700
1938-39	316.0	6.5	53.5	38,680.0		N.D.
1939-40	506.0	.0	50.5	36,640.0	Jun 24	506
1940-41	3,870.0	.0	317.0	229,300.0	Mar 04	4,460
1941-42	370.0	2.5	13.1	9,480.0	Apr 20	422
1942-43	10,370.0	2.0	334.0	242,000.0	Jan 23	12,100
1943-44	2,710.0	3.6	184.0	133,700.0	Feb 22	5,170
1944-45	980.0	6.1	62.8	45,490.0	Feb 06	988
1945-46	937.0	.3	75.9	54,930.0	Dec 23	980
1946-47	2,930.0	.0	74.9	54,220.0	Dec 31	2,980
1947-48	1,170.0	.0	18.1	13,170.0	Jun 02	1,320
1948-49	61.0	.0	5.7	4,140.0	Oct 27	79
1949-50	7.9	.0	.7	51.0	Jul 31	8
1950-51	47.0	.0	8.6	6,220.0	Apr 27	168
1951-52	3,530.0	.0	91.1	66,120.0		N.D.
1952-53	1,190.0	.0	69.4	50,240.0		N.D.
1953-54	960.0	.0	34.6	25,030.0	Apr 16	9,420
1954-55	9.9	.0	.1	86.0	Sep 26	10
1955-56	43.0	.0	.2	176.0	Sep 30	45
1956-57	650.0	.0	12.4	9,010.0	Apr 14	656
1957-58	2,470.0	.0	241.0	174,100.0	Apr 05	2,780
1958-59	348.0	.0	11.3	8,200.0	Feb 24	364
1959-60	.0	.0	.0	.0		0
1960-61	7.5	.0	1.7	1,250.0	May 06	9
1961-62	1,520.0	.0	102.0	73,590.0	Feb 12	1,650
1962-63	27.0	.0	1.0	712.0	Sep 04	45
1963-64	22.0	.0	.2	160.0	Aug 26	50
1964-65	276.0	.0	10.7	981.0	Jun 12	291
1965-66	7,260.0	.0	225.0	162,900.0	Nov 23	8,640
1966-67	3,750.0	.0	232.0	167,900.0	Dec 06	5,680

M	Data Missing
*	Record incomplete
E	Estimate
N.D.	Not determined
**	Record not Computed
+	Less than 0.05 Acre Feet or less than 0.05 CFS, but greater than 0

RUNOFF – STREAM GAGING STATION PEAK FLOW

SAN GABRIEL RIVER *below* Morris Dam
STATION NO. U8-R

Season	Daily CFS			Total Runoff (Acre-feet)	Peak Inflow	
	Maximum	Minimum	Mean		Date	CFS
1967-68	236.0	.0	31.7	23,030.0	Nov 25	326
1968-69	19,300.0	.0	750.0	543,000.0	Feb 25	29,850
1969-70	1,060.0	.0	52.4	37,970.0	Feb 28	1,102
1970-71	434.0	.0	31.4	22,760.0	Jan 04	439
1971-72	299.0	.0	15.3	11,090.0	Dec 08	299
1972-73	849.0	.0	131.0	94,790.0	Mar 19	918
1973-74	310.0	.0	60.8	44,010.0	Nov 07	364
1974-75	248.0	.0	29.7	21,500.0		248
1975-76	191.0	.0	28.8	20,870.0	Mar 25	178
1976-77	267.0	.0	21.8	15,760.0	Oct 13	273
1977-78	10,800.0	.0	630.1	456,170.0	Mar 04	14,100
1978-79	504.0	.0	149.2	108,000.0	Apr 22	519
1979-80	8,310.0	.0	473.3	337,410.0	Feb 19	8,720
1980-81	415.0	.0	37.8	27,335.0	Dec 11	514
1981-82	586.0	.0	90.2	65,284.0	Mar 24	5,490
1982-83	11,600.0	.0	15.9	352,733.0	Mar 02	11,900
1983-84	485.0	.0	2.2	48,419.0	Oct 13	552
1984-85	464.0	.0	48.5	35,100.0	Jan 01	469
1985-86	831.0	.0	131.0	94,778.0	Feb 25	856
1986-87	186.0	.0	60.8	43,995.0	Feb 23	212
1987-88	253.0	.0	94.1	67,673.0	Jun 08	793
1988-89	434.0	.4	68.0	49,058.0	Jan 05	434
1989-90	166.0	.1	64.0	46,101.0	Apr 28	162
1990-91	785.0	.0	113.0	80,999.0	Jul 28	793
1991-92	1,740.0	.8	206.0	149,508.0	Feb 15	3,460
1992-93	9,500.0	.0	655.0	474,300.0	Jan 14	9,500
1993-94	480.0	.0	57.8	41,860.0	Aug 02	1,490
1994-95	*	*	*	*		*
1995-96	552.0	.4	124.0	89,820.0	Sep 25	1,220
1996-97	696.0	.3	90.3	65,340.0	Feb 02	1,620
1997-98	7,200.0	.0	365.0	264,000.0	Feb 24	10,300
1998-99	250.0	.0	33.1	23,970.0	Mar 01	3,140
1999-00	316.0	1.2	59.1	42,900.0	May 01	834
2000-01	490.0	2.0	65.3	47,240	May 09	1,240

M	Data Missing
*	Record incomplete
E	Estimate
N.D.	Not determined
**	Record not Computed
+	Less than 0.05 Acre Feet or less than 0.05 CFS, but greater than 0

RUNOFF – STREAM GAGING STATION PEAK FLOW

SAN GABRIEL RIVER *above* Whittier Narrow Dam
STATION NO. G44B-R

Season	Daily CFS			Total Runoff (Acre-feet)	Peak Inflow	
	Maximum	Minimum	Mean		Date	CFS
1991-92*	1,080.0	0.0	18.7	13,303.3		
1992-93	8,940.0	0.0	331.0	239,550.9		
1993-94	1,030.0	0.0	19.2	13,928.9	Mar 24	8,650
1994-95	6,130.0	0.0	112.0	80,833.8	Jan 10	29,600
1995-96	5,280.0	0.0	33.9	24,639.1	Feb 20	19,700
1996-97	2,300.0	0.0	31.7	22,917.2	Dec 09	7,130
1997-98	7,200.0	0.0	107.0	77,631.5	Feb 07	28,900
1998-99	355.0	0.0	4.3	3,135.7	Nov 08	3,700
1999-00*	1,510.0	0.0	23.2	16,815.7	Feb 23	11,700
2000-01	2,360.0	0.0	28.3	20,490.0	Jan 11	9,210

M	Data Missing
*	Record incomplete
E	Estimate
N.D.	Not determined
**	Record not Computed
+	Less than 0.05 Acre Feet or less than 0.05 CFS, but greater than 0

RUNOFF – STREAM GAGING STATION PEAK FLOW

SAN GABRIEL RIVER *above* Spring Street
STATION NO. F42B-R

Season	Daily CFS			Total Runoff (Acre-feet)	Peak Inflow	
	Maximum	Minimum	Mean		Date	CFS
1927-28	0.0	0.0	0.0	0.0		0
1928-29	0.0	0.0	0.0	0.0		0
1929-30	0.0	0.0	0.0	0.0		0
1930-31	0.0	0.0	0.0	0.0		0
1931-32	1,270.0	0.0	9.0	6,560.0	Feb 09	4,490
1932-33	170.0	0.0	1.1	809.0	Jan 20	2,250
1933-34	4,860.0	0.0	17.1	12,370.0	Jan 01	15,000
1934-35	463.0	0.0	3.3	2,380.0	Oct 17	3,390
1935-36	220.0	0.0	1.6	1,190.0	Feb 12	1,910
1936-37	1,850.0	0.0	18.7	13,510.0	Feb 14	4,560
1937-38	14,500.0	0.0	122.0	88,020.0	Mar 02	27000E
1938-39	265.0	0.0	1.5	1,080.0	Dec 19	956
1939-40	192E	0.0	2.0	1,460.0	Feb 03	1,400
1940-41	1,710.0	0.0	91.0	65,890.0	Mar 13	4,830
1941-42	148.0	0.0	15.0	10,830.0	Dec 11	277
1942-43	9,570.0	0.0	280.0	175,100.0	Jan 23	14,600
1943-44	5,570.0	0.0	99.4	72,200.0	Feb 22	15,000
1944-45	742.0	0.0	30.8	22,280.0	Feb 02	1,910
1945-46	1,460.0	0.0	17.4	12,590.0	Dec 23	3,300
1946-47	2,520.0	0.0	33.3	24,100.0	Jan 01	2,740
1947-48	0.0	0.0	0.0	0.0		0
1948-49	0.0	0.0	0.0	0.0		0
1949-50	0.0	0.0	0.0	0.0		0
1950-51	0.0	0.0	0.0	0.0		0
1951-52	STATION	OUT		21100E		0
1952-53	101.0	0.0	0.3	220.0	Dec 02	301
1953-54	445.0	0.0	2.9	2,060.0	Feb 13	3,520
1954-55	240.0	0.0	1.1	820.0	Jan 18	1,640
1955-56	4,300.0	0.0	12.9	9,390.0	Jan 26	12,500
1956-57	393.0	0.0	1.2	896.0	Jan 13	1,760
1957-58	1,510.0	0.0	31.6	22,890.0	Apr 07	5,220
1958-59	615.0	0.0	3.2	2,340.0	Jan 06	2,940
1959-60	355.0	0.0	2.6	1,860.0	Jan 12	2,180
1960-61	204.0	0.0	0.6	448.0	Jan 26	1,780
1961-62	2,940.0	0.0	32.0	23,070.0	Feb 11	7,350
1962-63	1,530.0	0.0	7.3	5,290.0	Mar 17	4,120

M	Data Missing
*	Record incomplete
E	Estimate
N.D.	Not determined
**	Record not Computed
+	Less than 0.05 Acre Feet or less than 0.05 CFS, but greater than 0

RUNOFF – STREAM GAGING STATION PEAK FLOW

SAN GABRIEL RIVER *above* Spring Street
STATION NO. F42B-R

Season	Daily CFS			Total Runoff (Acre-feet)	Peak Inflow	
	Maximum	Minimum	Mean		Date	CFS
1963-64	751.0	0.0	4.4	3,160.0	Jan 22	2,570
1964-65	1,070.0	0.0	12.1	8,770.0	Apr 09	4,540
1965-66	630.0	0.0	10.2	7,400.0	Feb 06	1,950
1966-67	1,190.0	0.0	37.1	26,850.0	Jan 23	4,760
1967-68	847.0	+	9.2	6,720.0	Nov 21	3,280
1968-69	9,350.0	+	286.0	207,300.0	Jan 25	11,700
1969-70	1,760.0	+	24.2	17,520.0	Mar 05	5,550
1970-71	2,700.0	+	27.1	19,610.0	Dec 19	5,550
1971-72	1,980.0	0.1	82.2	39,900.0	Dec 24	8,580
1972-73	2,710.0	10.6	70.6	51,100.0	Jan 16	5,680
1973-74	3,730.0	10.6	63.9	46,220.0	Jan 04	6,090
1974-75	2,190.0	6.1	48.1	34,850.0	Dec 04	7,190
1975-76	660.0	12.6	50.5	36,640.0	Sep 10	3,891
1976-77	816.0	20.0	54.7	39,600.0	Jan 03	4,460
1977-78	*	*	*	*		*
1978-79	1,220.0	N.D.	N.D.	N.D.	Jan 31	4,780
1979-80	8,310.0	19.3	252.7	179,251.0	Feb 14	11,000
1980-81	*	*	*	*		*
1981-82	433.0	31.4	74.5	53,942.0	Mar 14	1,260
1982-83	5,900.0	43.4	221.0	159,961.0	Mar 01	13,400
1983-84	483.0	32.9	109.0	78,947.0	Nov 01	4,470
1984-85	488.0	44.2	3.8	84,238.0	Feb 09	1,480
1985-86	*	*	*		Feb 15	3,930
1986-87	1,110.0	32.9	113.3	82,029.0	Jan 04	4,990
1987-88	727.0	26.0	108.4	78,667.0	Dec 04	2,220
1988-89	406.0	33.3	91.0	65,899.0	Dec 25	2,080
1989-90	880.0	4.3	81.0	58,661.0	Feb 17	1,610
1990-91	813.0	25.7	78.2	56,581.0	Mar 01	1,610
1991-92	2,000.0	28.4	107.0	77,647.0	Feb 12	6,330
1992-93	6,480.0	19.8	389.0	269,000.0	Feb 19	10,100
1993-94	*	*	*	*		*
1994-95	3,230.0	33.3	173.0	125,400.0	Mar 11	10,200
1995-96	1,120.0	25.8	112.0	81,050.0	Feb 20	4,330
1996-97	738.0	51.0	143.0	97,910.0	Dec 11	2,410
1997-98	5,550.0	57.0	276.0	199,900.0	Feb 07	12,500
1998-99	290.0	52.0	136.0	98,720.0	Apr 11	1,120

M	Data Missing
*	Record incomplete
E	Estimate
N.D.	Not determined
**	Record not Computed
+	Less than 0.05 Acre Feet or less than 0.05 CFS, but greater than 0

RUNOFF – STREAM GAGING STATION PEAK FLOW

SAN GABRIEL RIVER *above* Spring Street
STATION NO. F42B-R

Season	Daily CFS			Total Runoff (Acre-feet)	Peak Inflow	
	Maximum	Minimum	Mean		Date	CFS
1999-00	414.0	59.0	126.0	91,220.0	Mar 08	2,240
2000-01	2,010.0	27.0	159.0	115,200	Jan 11	8,480

M	Data Missing
*	Record incomplete
E	Estimate
N.D.	Not determined
**	Record not Computed
+	Less than 0.05 Acre Feet or less than 0.05 CFS, but greater than 0

RUNOFF – STREAM GAGING STATION PEAK FLOW

SAN JOSE CHANNEL *below* Seventh Avenue
STATION NO. F312B-R

Season	Daily CFS			Total Runoff (Acre-feet)	Peak Inflow	
	Maximum	Minimum	Mean		Date	CFS
1955-56	1,830.0	.0	5.6	4,070.0	Jan 26	5,180
1956-57	190.0	.0	1.1	795.0	Mar 01	1,410
1957-58	1,210.0	.0	19.4	14,060.0	Apr 07	3,990
1958-59	487.0	.0	4.4	3,210.0	Jan 06	2,720
1959-60	253.0	.0	4.7	3,430.0	Apr 27	1,380
1960-61	103.0	.0	.6	403.0	Jan 26	429
1961-62	1,220.0	.0	13.2	9,540.0	Feb 11	3,800
1962-63	581.0	.0	7.6	5,530.0	Mar 16	1,940
1963-64	483.0	+	6.8	4,900.0	Jan 22	1,250
1964-65	1,080.0	.0	14.0	10,110.0	Apr 09	4,540
1965-66	1,640.0	+	21.1	15,290.0	Dec 29	5,220
1966-67	2,290.0	2.8	36.3	26,260.0	Jan 24	10,200
1967-68	2,180.0	6.4	24.6	17,870.0	Mar 08	10,100
1968-69	4,370.0	9.3	73.2	52,980.0	Feb 25	9,710
1969-70	898.0	8.0	28.7	20,490.0	Mar 04	3,930
1970-71	1,180.0	5.0	22.4	16,190.0	Dec 21	4,400
1971-72	988.0	3.9	17.4	12,650.0	Dec 24	3,720
1972-73	1,820.0	7.0	38.4	27,830.0	Feb 13	6,440
1973-74	1,970.0	8.0	33.3	24,060.0	Jan 04	4,900
1974-75	1,260.0	5.2	64.4	46,650.0	Dec 04	9,620
1975-76	1,200.0	5.0	25.6	18,310.0	Sep 10	5,000
1976-77	816.0	3.0	23.2	16,820.0	Aug 17	3,580
1977-78	2,740.0	5.0	74.0	53,613.0	Mar 04	11,100
1978-79	2,420.0	5.6	43.9	31,812.0	Jan 31	7,330
1979-80	3,150.0	6.3	81.4	57,830.0	Feb 18	13,000
1980-81	1,240.0	12.6	96.2	69,674.0	Mar 01	4,810
1981-82	1,140.0	8.6	34.1	24,673.0	Mar 14	5,790
1982-83	2,720.0	11.8	65.8	47,646.0	Feb 27	19,200
1983-84	1,050.0	8.6	28.3	20,538.0	Oct 01	5,060
1984-85	927.0	8.6	38.6	27,929.0	Dec 18	5,330
1985-86	1,850.0	10.2	51.8	37,499.0	Feb 15	7,250
1986-87	1,900.0	7.8	38.4	27,787.0	Jan 04	6,980
1987-88	1,700.0	6.3	35.3	25,633.0	Jan 17	7,850
1988-89	1,100.0	7.4	59.2	42,258.0	Dec 21	4,800
1989-90	3,060.0	7.8	80.6	58,322.0	Feb 17	7,700
1990-91	1,960.0	7.1	68.0	48,938.0	Mar 01	7,270

M	Data Missing
*	Record incomplete
E	Estimate
N.D.	Not determined
**	Record not Computed
+	Less than 0.05 Acre Feet or less than 0.05 CFS, but greater than 0

RUNOFF – STREAM GAGING STATION PEAK FLOW

SAN JOSE CHANNEL *below* Seventh Avenue
STATION NO. F312B-R

Season	Daily CFS			Total Runoff (Acre-feet)	Peak Inflow	
	Maximum	Minimum	Mean		Date	CFS
1991-92	2,370.0	7.3	83.0	60,221.0	Feb 11	16,800
1992-93	4,370.0	7.0	*	*	Jan 07	20,200
1993-94	*	*	*	*		*
1994-95	2,480.0	22.7	105.0	75,660.0	Jan 10	11,400
1995-96	1,630.0	.0	44.4	32,260.0	Feb 20	10,100
1996-97	868.0	1.8	40.4	29,240.0	Jan 25	4,440
1997-98	1,760.0	11.0	70.7	51,170.0	Feb 07	14,500
1998-99	314.0	2.3	26.1	18,870.0	Nov 28	2,150
1999-00	1,220.0	6.9	81.1	58,900.0	Apr 18	6,480
2000-01	3,320.0E	6.9*	83.5E	60,440E		N.D.

M	Data Missing
*	Record incomplete
E	Estimate
N.D.	Not determined
**	Record not Computed
+	Less than 0.05 Acre Feet or less than 0.05 CFS, but greater than 0

RUNOFF – STREAM GAGING STATION PEAK FLOW

SANTA ANITA WASH @ Longden Avenue
STATION NO. F193B-R

Season	Daily CFS			Total Runoff (Acre-feet)	Peak Inflow	
	Maximum	Minimum	Mean		Date	CFS
1959-60	55.0	+	.6	465.0	Apr 27	534
1960-61	33.0	.0	.3	216.0	Nov 12	314
1961-62	693.0	.0	8.2	5,910.0	Feb 11	1,780
1962-63	101.0	.0	1.0	709.0	Feb 09	621
1963-64	47.0	.0	.9	650.0	Nov 20	581
1964-65	63.0	.0	1.4	985.0	Apr 09	518
1965-66	541.0	+	12.0	8,730.0	Dec 29	1,380
1966-67	613.0	+	16.0	11,570.0	Dec 06	1,180
1967-68	111.0	+	1.7	1,230.0	Nov 19	816
1968-69	2,760.0	+	46.9	33,930.0	Jan 25	6,850
1969-70	150.0	+	3.2	2,300.0	Mar 02	1,290
1970-71	350.0	+	3.4	2,440.0	Dec 21	590
1971-72	71.0	.0	.4	320.0	Dec 24	324
1972-73	595.0	.0	5.9	4,270.0	Feb 27	1,630
1973-74	158.0	+	2.9	2,090.0	Jan 07	518
1974-75	95.0	.0	1.2	875.0	Dec 04	943
1975-76	82.0	.0	1.5	1,060.0	Sep 11	766
1976-77	46.0	.0	1.0	752.0	Oct 23	694
1977-78	877.0	.0	35.5	25,720.0	Feb 10	2,350
1978-79	1,160.0	.1	12.4	8,978.0	Feb 21	1,730
1979-80	1,690.0	.1	72.1	51,148.0	Jan 29	2,090
1980-81	121.0	.0	1.3	963.0	Jan 29	1,100
1981-82	176.0	.0	3.4	2,485.0	Mar 17	1,060
1982-83	958.0	.0	79.5	57,533.0	Mar 02	2,240
1983-84	143.0	.1	8.9	6,453.0	Nov 01	656
1984-85	92.7	.0	3.0	2,142.0	Dec 19	517
1985-86	104.0	.2	6.9	4,987.0	Feb 14	379
1986-87	27.3	.0	.6	454.0	Oct 02	857
1987-88	82.0	.0	1.6	1,156.0	Jan 17	858
1988-89	42.2	.0	1.0	717.0	Dec 16	180
1989-90	76.6	.0	.8	617.0	Jan 13	463
1990-91	104.0	.0	2.2	1,602.0	Mar 01	490
1991-92	498.0	.0	19.2	13,964.0	Feb 12	1,320
1992-93	552.0	.0	35.7	25,860.0	Jan 18	1,370
1993-94	354.0	.0	2.2	1,623.0	Apr 27	404
1994-95	375.0	.0	19.2	13,920.0	Jan 10	1,070

M	Data Missing
*	Record incomplete
E	Estimate
N.D.	Not determined
**	Record not Computed
+	Less than 0.05 Acre Feet or less than 0.05 CFS, but greater than 0

RUNOFF – STREAM GAGING STATION PEAK FLOW

SANTA ANITA WASH @ Longden Avenue
STATION NO. F193B-R

Season	Daily CFS			Total Runoff (Acre-feet)	Peak Inflow	
	Maximum	Minimum	Mean		Date	CFS
1995-96	299.0	.0	4.5	3,257.0	Jan 31	1,550
1996-97	89.0	.0	5.7	4,110.0	Jan 26	443
1997-98	910.0	+	22.1	16,010.0	Feb 06	883
1998-99	34.0	.0	1.0	717.0	Jan 26	230
1999-00	71.0	.0	2.1	1,510.0	Feb 21	581
2000-01	86.0	+	2.9	2,110	Jan 11	430

M	Data Missing
*	Record incomplete
E	Estimate
N.D.	Not determined
**	Record not Computed
+	Less than 0.05 Acre Feet or less than 0.05 CFS, but greater than 0

RUNOFF – STREAM GAGING STATION PEAK FLOW

SANTA ANITA WASH *below* Foothill Blvd.
STATION NO. F260C-R

Season	Daily CFS			Total Runoff (Acre-feet)	Peak Inflow	
	Maximum	Minimum	Mean		Date	CFS
1935-36	0.0	0.0	0.0			
1936-37	140.0	0.0	10.0	6,448.3	Feb 15	174
1937-38	468.0	0.0	3.4	2,330.0		
1938-39	46.0	0.0	2.0	1,471.3	Jan 05	128
1939-40	58.0	0.0	1.6	1,062.3	Jan 08	248
1940-41	262.0	0.0	18.1	12,930.8	Mar 04	482
1941-42	26.0	0.0	1.0	692.6	Dec 29	65
1942-43	2,130.0	0.0	30.0	21,674.2	Jan 23	3,800
1943-44	395.0	0.0	8.7	6,139.4	Feb 22	747
1944-45	92.0	0.0	2.3	1,540.0	Jun 25	225
1945-46	182.0	0.0	2.0	1,479.5	Dec 23	350
1946-47	144.0	0.0	3.4	2,488.7	Dec 29	289
1947-48						
1948-49						
1949-50						
1950-51						
1951-52						
1952-53						
1953-54						
1954-55						
1955-56						
1956-57						
1957-58	254.0	0.0	8.9	6,316.6		
1958-59	66.0	0.0	0.7	474.8	Jan 06	1,000
1959-60	10.2	0.0	0.2	161.3	Jan 11	194
1960-61	9.5	0.0	0.1	96.2	Nov 05	257
1961-62	584.0	0.0	7.3	4,982.9	Feb 11	1,440
1962-63	43.0	0.0	0.6	408.2	Feb 09	257
1963-64	32.0	0.0	0.6	423.3	Jan 22	335
1964-65	27.0	0.0	0.6	446.5	Apr 16	267
1965-66	481.0	0.0	10.5	7,589.0	Dec 29	1,260
1966-67	489.0	0.0	14.8	10,772.2	Dec 06	914
1967-68						
1968-69						
1969-70						
1970-71						

M	Data Missing
*	Record incomplete
E	Estimate
N.D.	Not determined
**	Record not Computed
+	Less than 0.05 Acre Feet or less than 0.05 CFS, but greater than 0

RUNOFF – STREAM GAGING STATION PEAK FLOW

SANTA ANITA WASH *below* Foothill Blvd.
STATION NO. F260C-R

Season	Daily CFS			Total Runoff (Acre-feet)	Peak Inflow	
	Maximum	Minimum	Mean		Date	CFS
1971-72						
1972-73						
1973-74						
1974-75	43.0	0.0	0.5	378.8	Dec 04	477
1975-76	53.5	0.0	0.8	583.5	Feb 09	209
1976-77	35.9	0.0	0.6	414.7	Oct 23	437
1977-78	937.0	0.0	41.6	30,147.0	Feb 10	2,030
1978-79	29.3	0.0	2.3	1,685.8	Feb 21	335
1979-80						
1980-81	39.5	0.0	0.9	652.0	Mar 19	411
1981-82	100.0	0.0	2.8	2,019.2	Mar 17	346
1982-83	773.0	0.0	30.2	21,839.8	Mar 02	1,340
1983-84	61.5	0.0	5.7	4,150.8	Nov 01	398
1984-85	110.0	0.0	4.5	3,282.6	Dec 19	378
1985-86	913.0	0.0	0.0	0.0		
1986-87	64.3	0.0	2.0	1,415.2	Jan 04	424
1987-88	40.8	0.0	1.3	938.8	Jan 17	975
1988-89	22.4	0.0	1.0	673.8	Dec 16	91
1989-90	28.0	0.0	0.7	537.1	Feb 17	189
1990-91	52.7	0.0	0.8	570.0	Feb 28	323
1991-92	593.0	0.0	27.7	20,116.0	Feb 12	1,110
1992-93	572.0	0.0	33.8	24,439.1	Jan 18	905
1993-94	59.2	0.0	5.8	4,192.3	Feb 17	175
1994-95	215.0	0.0	15.7	11,368.9	Mar 10	517
1995-96	236.0	0.0	9.4	5,846.3		
1996-97	86.0	0.0	4.8	3,454.6	Jan 26	252
1997-98	429.0	0.0	11.6	8,366.7		N.D.
1998-99	3.0	0.0	0.1	49.4	Jan 26	76
1999-00	63.0	0.0	1.7	1,257.5	Feb 21	479
2000-01	89.0	0.0	1.3	930.0	Jun 28	264

M	Data Missing
*	Record incomplete
E	Estimate
N.D.	Not determined
**	Record not Computed
+	Less than 0.05 Acre Feet or less than 0.05 CFS, but greater than 0

RUNOFF – STREAM GAGING STATION PEAK FLOW

SANTA CLARA RIVER @ Old Road Bridge
STATION NO. F92C-R

Season	Daily CFS			Total Runoff (Acre-feet)	Peak Inflow	
	Maximum	Minimum	Mean		Date	CFS
1929-30	N.D.	N.D.	N.D.	N.D.	Mar 15	193
1930-31	291.0	.1	2.6	1,890.0	Feb 07	2,310
1931-32	739.0	.1	5.9	4,280.0	Feb 09	2,090
1932-33	90.0	.0	.7	488.0	Jan 19	618
1933-34	448.0	+	2.2	1,600.0	Jan 01	3,870
1934-35	82.0	+	1.5	1,090.0	Jan 05	608
1935-36	113.0	.0	2.2	1,590.0	Feb 23	833
1936-37	471.0	.0	6.7	4,850.0	Dec 27	3,410
1937-38	6,370.0	+	37.2	26,900.0	Mar 02	24000E
1938-39	435.0	+	14.4	10,410.0	Dec 15	4,620
1939-40	79.0	.3	2.2	1,570.0	Feb 01	676
1940-41	3,450.0	.3	57.1	41,320.0	Mar 04	5,050
1941-42	167.0	.6	32.3	23,400.0	Dec 28	443
1942-43	5,420.0	1.4	65.2	47,170.0	Jan 23	15,000
1943-44	9,360.0	2.0	68.6	49,770.0	Feb 22	22,200
1944-45	110.0	2.2	15.3	11,050.0	Feb 02	317
1945-46	194.0	.4	8.9	6,440.0	Mar 30	500
1946-47	371.0	1.0	15.4	11,150.0	Dec 26	1,620
1947-48	33E	.8	3.1	2,270.0	Mar 24	350E
1948-49	4.9	.4	1.8	1,300.0	Mar 11	10
1949-50	5.2	.1	1.2	888.0	Feb 06	9
1950-51	2.0	+	.3	217.0	Jan 29	6
1951-52	1,620.0	+	23.1	16,760.0	Jan 16	7,600
1952-53	43.0	.1	.8	592.0	Dec 01	N.D.
1953-54	104.0	+	1.6	1,160.0	Jan 19	626
1954-55	96.0	+	.8	612.0	Jan 18	746
1955-56	184.0	+	1.4	1,000.0	Jan 26	344
1956-57	195.0	.0	1.4	1,020.0	Feb 28	1,920
1957-58	1,440.0	.0	14.7	10,620.0	Apr 03	3,850
1958-59	215.0	.0	1.3	940.0	Jan 06	1,410
1959-60	12.0	.0	.4	288.0	Apr 27	151
1960-61	58.0	.0	.7	533.0	Nov 05	830
1961-62	1,690.0	.0	14.5	10,470.0	Feb 12	4,250
1962-63	105.0	.0	1.3	965.0	Mar 16	1,470
1963-64	85.0	.0	1.1	780.0	Jan 22	860
1964-65	240.0	.0	2.1	1,550.0	Apr 08	1,260

M	Data Missing
*	Record incomplete
E	Estimate
N.D.	Not determined
**	Record not Computed
+	Less than 0.05 Acre Feet or less than 0.05 CFS, but greater than 0

RUNOFF – STREAM GAGING STATION PEAK FLOW

SANTA CLARA RIVER @ Old Road Bridge
STATION NO. F92C-R

Season	Daily CFS			Total Runoff (Acre-feet)	Peak Inflow	
	Maximum	Minimum	Mean		Date	CFS
1965-66	3,200.0	.0	22.0	15,990.0	Dec 29	11,600
1966-67	820.0	+	9.8	7,100.0	Jan 24	3,000
1967-68	475.0	.0	4,3	3,070.0	Jan 24	3,000
1968-69	N.D.	.2	**	30170E	Feb 25	31800E
1969-70	164.0	1.0	13.3	9,610.0	Mar 01	900
1970-71	1,830.0	.5	15.1	10,930.0	Nov 29	8,150
1971-72	442.0	.5	9.2	6,640.0	Dec 27	2,200
1972-73	1,470.0	.4	13.0	9,450.0	Feb 11	4,760
1973-74	984.0	1.0	9.1	6,600.0	Jan 07	2,440
1974-75	187.0	.9	5.4	3,910.0	Dec 04	1,123
1975-76	138.0	+	3.7	2,710.0	Sep 10	999
1976-77	273.0	+	3.8	2,750.0	May 08	2,510
1977-78	8,610.0	.0	95.3	68,966.0	Feb 10	18,900
1978-79	605.0	1.0	16.0	11,617.0	Mar 28	3,370
1979-80	*	*	*	*		*
1980-81	NO RECORD					
1981-82	NO RECORD					
1982-83	5,214.0	.8	113.8	83,154.0	Mar 01	14,925
1983-84	*	*	*	*		*
1984-85	295.0	1.0	18.8	13,558.0	Dec 19	1,820
1985-86	492.0	7.5	24.7	17,896.0	Feb 14	1,050
1986-87	71.3	5.2	14.3	10,197.0	Nov 18	444
1987-88	485.0	.0	16.5	11,981.0	Dec 04	1,450
1988-89	145.0	3.7	11.9	8,535.0	Dec 16	876
1989-90	18.0	4.9	12.2	8,864.0	Feb 17	523
1990-91	604.0	2.4	13.9	10,058.0	Mar 01	2,750
1991-92	*	*	*	*		*
1992-93	*	*	*	*		*
1993-94	*	*	*	*		*
1994-95	*	*	*	*		*
1995-96	*	*	*	*		*
1996-97	181.0	1.9	8.6	6,190.0	Dec 22	2,000
1997-98	7,080.0	1.3	89.2	53,800.0	Feb 23	19,000
1998-99	136.0	4.3	15.7	11,330.0	Jan 31	1,610
1999-00	1,300.0	3.0	18.7	13,600.0	Feb 23	8,770
2000-01	27.0	2.6	7.8	5,620	Jan 24	30

M	Data Missing
*	Record incomplete
E	Estimate
N.D.	Not determined
**	Record not Computed
+	Less than 0.05 Acre Feet or less than 0.05 CFS, but greater than 0

RUNOFF – STREAM GAGING STATION PEAK FLOW

SANTA FE DIVERSION CHANNEL *below* Santa Fe Dam
STATION NO. F280-R

Season	Daily CFS			Total Runoff (Acre-feet)	Peak Inflow	
	Maximum	Minimum	Mean		Date	CFS
1943-44	253.0	.0	20.9	15,180.0	May 18	253
1944-45	.0	.0	.0	.0		0
1945-46	479.0	.0	31.2	22,610.0	Sep 13	484
1946-47	446.0	.0	16.8	12,200.0	Nov 27	484
1947-48	786.0	.0	10.9	7,880.0	Jun 04	800
1948-49	.0	.0	.0	.0		0
1949-50	.0	.0	.0	.0		0
1950-51	.0	.0	.0	.0		0
1951-52	381.0	.0	3.2	2,280.0	Mar 16	732
1952-53	819.0	.0	10.7	7,720.0	Nov 03	839
1953-54	750.0	.0	11.5	8,350.0	May 07	752
1954-55	.0	.0	.0	.0		0
1955-56	.0	.0	.0	.0		0
1956-57	452.0	.0	4.7	3,400.0	Apr 16	455
1957-58	621.0	.0	27.0	19,530.0	Apr 04	635
1958-59	.0	.0	.0	.0		0
1959-60	.0	.0	.0	.0		0
1960-61	.0	.0	.0	.0		0
1961-62	547.0	.0	12.7	9,190.0	Feb 12	819
1962-63	.0	.0	.0	.0		0
1963-64	.0	.0	.0	.0		0
1964-65	+	+	+	+	Sep 08	1
1965-66	348.0	.0	10.4	7,540.0	Jan 07	425
1966-67	227.0	.0	21.3	15,470.0	Dec 18	236
1967-68	.8	.0		33.0	Nov 20	1
1968-69	268.0	.0	33.6	24,340.0	Apr 15	290
1969-70	55.0	.0	1.9	1,360.0	Mar 03	202
1970-71	90.0	.0	3.4	2,430.0	Dec 24	92
1971-72	95.0	.0	1.0	697.0	Jan 19	116
1972-73	222.0	.0	13.0	9,410.0	Feb 21	280
1973-74	233.0	.0	6.4	4,650.0	Apr 16	241
1974-75	24.0	.0	.6	466.0	Apr 22	27
1975-76	.0	.0	.0	.0		0
1976-77	23.5	.0	2.0	1,439.0	Aug 17	52
1977-78	*	*	56.2	40,699.0	Apr 21	432
1978-79	148.0	.0	16.7	12,113.0	May 01	195

M	Data Missing
*	Record incomplete
E	Estimate
N.D.	Not determined
**	Record not Computed
+	Less than 0.05 Acre Feet or less than 0.05 CFS, but greater than 0

RUNOFF – STREAM GAGING STATION PEAK FLOW

SANTA FE DIVERSION CHANNEL *below* Santa Fe Dam
STATION NO. F280-R

Season	Daily CFS			Total Runoff (Acre-feet)	Peak Inflow	
	Maximum	Minimum	Mean		Date	CFS
1979-80	388.0	.0	48.3	34,730.0	Mar 02	440
1980-81	370.0	.0	19.8	14,360.0	Nov 20	384
1981-82	268.0	.0	18.0	13,050.0	Jun 17	284
1982-83	365.0	.0	49.9	36,043.0	Jul 13	400
1983-84	382.0	.0	23.1	16,768.0	Oct 14	453
1984-85	31.7	.0	.4	278.0	Dec 19	57
1985-86	378.0	.0	40.2	29,110.0	Feb 27	391
1986-87	4.7	.0	1.9	115.0	Nov 18	7
1987-88	424.0	.0	11.5	8,362.0	Jun 09	429
1988-89	7.0	.0	.4	302.0	May 11	11
1989-90	.0	.0	.0	.0		0
1990-91	547.0	.0	23.5	16,782.0	Jul 31	566
1991-92	428.0	.0	50.2	36,405.0	Feb 04	450
1992-93	193.0	.0	42.0	30,370.0	Aug 09	215
1993-94	72.0	.0	2.1	1,511.0	Jul 29	129
1994-95	410.0	.0	23.5	17,050.0	Dec 04	414
1995-96	385.0	.0	35.8	25,988.0	Oct 05	397
1996 97	393.0	.0	19.6	14,220.0	Jul 22	407
1997-98	452.0	.0	23.5	17,010.0	May 19	467
1998-99	113.0	.0	2.2	1,570.0	Feb 10	225
1999-00	.0	.0	.0	.0		0
2000-01	16.0	0.0	0.7	470.0	Jan 08	179

M	Data Missing
*	Record incomplete
E	Estimate
N.D.	Not determined
**	Record not Computed
+	Less than 0.05 Acre Feet or less than 0.05 CFS, but greater than 0

RUNOFF – STREAM GAGING STATION PEAK FLOW

SANTIAGO CREEK *above* Little Rock Creek
STATION NO. F125-R

Season	Daily CFS			Total Runoff (Acre-feet)	Peak Inflow	
	Maximum	Minimum	Mean		Date	CFS
1953-54	24.0	.0	.9	631.0	Jan 25	44
1954-55	13.0	.0	.8	602.0	Feb 17	16
1955-56	41.0	.0	.6	406.0	Jan 26	87
1956-57	6.8	.0	.3	199.0	Jan 13	15
1957-58	58.0	.0	3.2	2,280.0	Apr 03	107
1958 59	10.0	.0	.5	386.0	Feb 16	21
1959-60	1.3	.0	.1	75.0	Feb 02	2
1960-61	+	.0	+	+	Aug 05	1
1961-62	118.0	.0	1.3	945.0	Feb 11	199
1962-63	.9	.0	+	19.0	Apr 21	1
1963-64	.4	.0	+	10.0	Apr 02	1
1964-65	3.5	.0	.1	87.0	Apr 20	4
1965-66	78.0	.0	1.3	926.0	Dec 29	269
1966-67	38.0	.0	1.4	982.0	Dec 06	66
1967-68	9.5	.0	.5	380.0	Nov 21	17
1968-69	345.0	.0	5.8	4,170.0	Jan 25	1,140
1969-70	14.0	.0	.6	455.0	Mar 01	21
1970-71	7.2	.0	.4	290.0	Nov 29	22
1971-72	3.2	.0	.1	75.0	Dec 24	5
1972-73	72.0	.0	.9	640.0	Feb 11	175
1973-74	4.3	.0	.2	144.0	Jan 17	6
1974-75	3.8	.0	.2	121.0	Mar 06	6
1975-76	14.0	.0	.1	55.0	Sep 24	1,060
1976-77	5.5	.0	.1	83.0	May 09	9
1977-78	118.0	.0	N.D.	3,486.0	Feb 09	328
1978-79	23.0	.0	1.4	984.0	Mar 28	30
1979-80	67.0	.0	3.1	2,227.0	Feb 16	193
1980-81	2.8	.0	.2	158.0		N.D.
1981-82	30.0	.0	.8	602.0		N.D.
1982-83	152.0	.0	5.6	4,022.0	Mar 01	280
1983-84	11.2	.0	1.0	711.0	Dec 25	26
1984-85	40.3	.0	.5	347.0	Dec 19	103
1985-86	13.7	.0	.5	337.0	Jan 30	24
1986-87	.7	.0	+	11.0	Mar 07	1
1987-88	17.0	.0	3.3	204.0		
1988-89	10.9	.0	2.9	165.0	Feb 09	86

M	Data Missing
*	Record incomplete
E	Estimate
N.D.	Not determined
**	Record not Computed
+	Less than 0.05 Acre Feet or less than 0.05 CFS, but greater than 0

RUNOFF – STREAM GAGING STATION PEAK FLOW

SANTIAGO CREEK *above* Little Rock Creek
STATION NO. F125-R

Season	Daily CFS			Total Runoff (Acre-feet)	Peak Inflow	
	Maximum	Minimum	Mean		Date	CFS
1989-90	.0	.0	.0	.0		0
1990-91	19.7	.0	.2	109.0		N.D.
1991-92	50.8	.0	.9	627.0	Feb 12	97
1992-93	177.0	.0	5.9	4,266.0	Feb 19	235
1993-94	1.5	.0	.3	248.0	Feb 14	2
1994-95	76.5	.0	1.9	1,379.0	Mar 11	90
1995-96	55.6	.0	.5	335.0	Mar 05	75
1996-97	12.0	.0	.2	120.0	Jan 26	19
1997-98	121.0	.0	4.2	3,050.0	Feb 23	317
1998-99	2.8	.0	.3	246.0	Jul 13	5
1999-00	6.1	.0	.1	115.0	Apr 18	7
2000-01	23.0	0.0	0.6	454.0	Mar 06	37

M	Data Missing
*	Record incomplete
E	Estimate
N.D.	Not determined
**	Record not Computed
+	Less than 0.05 Acre Feet or less than 0.05 CFS, but greater than 0

RUNOFF – STREAM GAGING STATION PEAK FLOW

SAWPIT CREEK *below* Sawpit Dam
STATION NO. F278-R

Season	Daily CFS			Total Runoff (Acre-feet)	Peak Inflow	
	Maximum	Minimum	Mean		Date	CFS
1941-42	1.3	0.0	0.1	30.3	Mar 13	3
1942-43	186.0	0.0	4.0	2,859.6	Jan 23	284
1943-44	50.0	0.0	1.0	667.4	Feb 22	67
1944-45						
1945-46	21.0	0.0	0.2	169.2	Dec 23	36
1946-47	18.0	0.0	0.5	328.9	Dec 26	26
1947-48						
1948-49						
1949-50						
1950-51						
1951-52						
1952-53						
1953-54						
1954-55						
1955-56						
1956-57						
1957-58						
1958-59						
1959-60						
1960-61						
1961-62						
1962-63						
1963-64						
1964-65						
1965-66						
1966-67						
1967-68						
1968-69						
1969-70						
1970-71						
1971-72						
1972-73						
1973-74						
1974-75	5.7	0.5	1.3	921.3	Oct 04	9
1975-76	6.1	0.2	0.9	646.0	Sep 11	21
1976-77	5.9	0.2	0.8	603.2	Oct 22	37

M	Data Missing
*	Record incomplete
E	Estimate
N.D.	Not determined
**	Record not Computed
+	Less than 0.05 Acre Feet or less than 0.05 CFS, but greater than 0

RUNOFF – STREAM GAGING STATION PEAK FLOW

SAWPIT CREEK *below* Sawpit Dam
STATION NO. F278-R

Season	Daily CFS			Total Runoff (Acre-feet)	Peak Inflow	
	Maximum	Minimum	Mean		Date	CFS
1977-78	87.9	0.2	6.5	4,716.9	Mar 04	132
1978-79	9.9	0.0	2.8	1,984.9	Oct 02	56
1979-80	110.0	0.0	4.8	3,485.2	Feb 06	216
1980-81	4.9	0.0	1.4	1,045.7	Mar 19	10
1981-82	38.6	0.4	1.8	1,307.1	Apr 26	72
1982-83	88.5	0.0	6.2	4,486.2	Mar 01	269
1983-84	15.2	0.0	1.8	1,268.8	May 07	63
1984-85	6.6	0.5	1.3	936.0	Dec 19	15
1985-86	10.1	0.0	1.7	1,204.0	Mar 08	14
1986-87						
1987-88	4.2	0.4	1.7	1,192.7		
1988-89	9.5	0.2	1.0	740.4		
1989-90	5.5	0.0	0.8	544.9		
1990-91	34.3	0.0	1.5	1,089.1		
1991-92	43.9	0.4	2.6	1,909.7	Feb 11	59
1992-93	76.6	1.1	8.8	6,392.7	Feb 08	94
1993-94	4.1	1.4	2.1	1,555.2	Jun 22	30
1994-95	79.7	1.5	4.9	3,551.6	Mar 05	86
1995-96	32.0	0.1	3.1	2,247.3	Feb 22	36
1996-97	11.0	1.5	2.7	1,952.1	Jan 26	14
1997-98	89.0	1.7	4.2	3,039.1	Feb 24	143
1998-99	3.2	0.7	2.2	1,579.8	Jun 02	50
1999-00*	4.3	0.7	1.7	1,261.9	May 03	6
2000-01	8.1E	0.45E	1.47E	1060E	Feb 13	15

M	Data Missing
*	Record incomplete
E	Estimate
N.D.	Not determined
**	Record not Computed
+	Less than 0.05 Acre Feet or less than 0.05 CFS, but greater than 0

RUNOFF – STREAM GAGING STATION PEAK FLOW

SAWPIT WASH *below* Live Oak Avenue
STATION NO. F194B-R

Season	Daily CFS			Total Runoff (Acre-feet)	Peak Inflow	
	Maximum	Minimum	Mean		Date	CFS
1960-61	50.0	+	*	263*	Jan 26	420
1961-62	573.0	+	16.6	11,980.0	Feb 11	1,300
1962-63	137.0	+	1.6	1,180.0	Feb 09	690
1963-64	83.0	+	1.6	1,190.0	Jan 22	682
1964-65	95.0	+	2.1	1,500.0	Apr 09	1,290
1965-66	243.0	+	7.3	9,240.0	Dec 29	1,470
1966-67	298.0	+	22.0	16,020.0	Dec 03	1,120
1967-68	130.0	+	2.1	1,520.0	Nov 19	1,870
1968-69	1,270.0	+	53.7	38,870.0	Jan 25	3,960
1969-70	773.0	.0	6.7	4,830.0	Feb 28	2,800
1970-71	196.0	+	5.8	4,190.0	Nov 29	1,350
1971-72	142.0	.1	2.0	1,450.0	Dec 24	519
1972-73	381.0	.0	16.8	12,130.0	Feb 27	2,860
1973-74	265.0	.1	9.0	6,490.0	Jan 07	652
1974-75	180.0	+	2.8	2,010.0	Dec 04	2,140
1975-76	101.0	.1	1.8	1,310.0	Sep 11	1,790
1976-77	118.0	.1	3.8	2,732.0	Oct 23	1,090
1977-78	381.0	.0	73.3	53,064.0	Feb 10	2,130
1978-79	160.0	.2	20.3	14,687.0	Feb 21	1,280
1979-80	886.0	.2	50.2	35,952.0	Feb 16	3,940
1980-81	376.0	.0	23.1	16,742.0	Jan 29	900
1981-82	257.0	.1	18.1	13,029.0	Mar 17	1,560
1982-83	530.0	.1	56.4	40,867.0	Mar 01	2,890
1983-84	294.0	.0	20.4	14,767.0	Oct 01	1,210
1984-85	122.0	.0	2.6	1,873.0	Dec 19	801
1985-86	*	*	*	*		*
1986-87	99.2	.1	1.2	857.0	Oct 02	1,070
1987-88	385.0	.0	12.9	9,344.0	Dec 04	1,630
1988-89	75.8	.0	1.6	1,167.0	Dec 16	555
1989-90	147.0	.0	1.3	911.0	Jan 13	707
1990-91	331.0	.0	17.3	12,646.0	Aug 08	375
1991-92	325.0	.0	36.8	26,730.0	Feb 11	1,710
1992-93	352.0	.0	42.4	30,690.0	Jan 14	4,160
1993-94	72.2	.0	3.7	2,671.0	Mar 19	1,160
1994-95	495.0	.1	29.2	21,160.0	Jan 10	1,940
1995-96	530.0	.2	44.1	32,020.0	Jan 31	3,580

M	Data Missing
*	Record incomplete
E	Estimate
N.D.	Not determined
**	Record not Computed
+	Less than 0.05 Acre Feet or less than 0.05 CFS, but greater than 0

RUNOFF – STREAM GAGING STATION PEAK FLOW

SAWPIT WASH *below* Live Oak Avenue
STATION NO. F194B-R

Season	Daily CFS			Total Runoff (Acre-feet)	Peak Inflow	
	Maximum	Minimum	Mean		Date	CFS
1996-97	393.0	.1	22.6	16,350.0	Jan 26	1,130
1997-98	452.0	.2	32.6	23,570.0	Feb 06	2,960
1998-99	142.0	.2	3.5	2,500.0	Jan 26	543
1999-00	127.0	.1	4.1	2,960.0	Apr 17	1,110
2000-01	187.0	0.1	3.4	2,440	Jan 02	2,200

M	Data Missing
*	Record incomplete
E	Estimate
N.D.	Not determined
**	Record not Computed
+	Less than 0.05 Acre Feet or less than 0.05 CFS, but greater than 0

RUNOFF – STREAM GAGING STATION PEAK FLOW

THOMPSON CREEK *below* Thomson Creek Dam
STATION NO. F32B-R

Season	Daily CFS			Total Runoff (Acre-feet)	Peak Inflow	
	Maximum	Minimum	Mean		Date	CFS
1945-46						
1946-47						
1947-48						
1948-49						
1949-50						
1950-51						
1951-52	4.6	0.0	0.0	32.5	Mar 17	6
1952-53						
1953-54						
1954-55						
1955-56						
1956-57						
1957-58	7.3	0.0	0.3	219.2	Apr 05	9
1958-59						
1959-60						
1960-61						
1961-62						
1962-63						
1963-64						
1964-65						
1965-66						
1966-67	23.0	0.0	0.4	305.1	Dec 06	130
1967-68						
1968-69						
1969-70						
1970-71						
1971-72						
1972-73						
1973-74						
1974-75						
1975-76						
1976-77						
1977-78	136.0	0.0	1.4	1,038.0	Mar 02	170
1978-79	3.6	0.0	0.1	46.4	May 04	8
1979-80	219.0	0.0	2.2	1,592.3	Feb 17	333
1980-81						

M	Data Missing
*	Record incomplete
E	Estimate
N.D.	Not determined
**	Record not Computed
+	Less than 0.05 Acre Feet or less than 0.05 CFS, but greater than 0

RUNOFF – STREAM GAGING STATION PEAK FLOW

THOMPSON CREEK *below* Thomson Creek Dam
STATION NO. F32B-R

Season	Daily CFS			Total Runoff (Acre-feet)	Peak Inflow	
	Maximum	Minimum	Mean		Date	CFS
1981-82	4.1	0.0	0.0	17.9	Feb 18	9
1982-83	76.5	0.0	0.8	581.4	Mar 02	83
1983-84	3.3	0.0	0.0	11.3	Dec 28	12
1984-85						
1985-86	9.6	0.0	0.1	58.5	Mar 16	17
1986-87						
1987-88	0.6	0.0	0.0	2.0	Jan 17	2
1988-89	0.3	0.0	0.0	2.4	Feb 04	1
1989-90	37.4	0.0	0.0	0.0	Apr 04	57
1990-91	2.2	0.0	0.0	33.7	Mar 02	3
1991-92	2.2	0.0	0.1	67.2	Feb 10	7
1992-93	54.7	0.0	1.9	1,323.0	Feb 08	113
1993-94	3.7	0.0	0.0	8.0	Nov 01	7
1994-95	25.8	0.0	0.4	299.0	Mar 06	63
1995-96	32.8	0.0	0.6	456.0	Feb 21	36
1996-97	11.0	0.0	0.1	50.0	Jan 29	55
1997-98	74.0	0.0	0.7	522.0	Feb 23	158
1998-99	0.1	0.0	0.0	14.0	Jul 14	1
1999-00	0.4	0.0	0.0	19.0	Apr 18	1
2000-01	1.1	0.0	0.0	4.3	Jan 16	10

M	Data Missing
*	Record incomplete
E	Estimate
N.D.	Not determined
**	Record not Computed
+	Less than 0.05 Acre Feet or less than 0.05 CFS, but greater than 0

RUNOFF – STREAM GAGING STATION PEAK FLOW

TOPANGA CREEK *above* Mouth of Canyon
STATION NO. F54C-R

Season	Daily CFS			Total Runoff (Acre-feet)	Peak Inflow	
	Maximum	Minimum	Mean		Date	CFS
1930-31	186.0	+	1.0	705.0	Feb 14	386
1931-32	409.0	+	4.9	3,590.0	Feb 08	1,250
1932-33	542.0	+	3.1	2,240.0	Jan 19	1,430
1933-34	1,590.0	.0	8.9	6,420.0	Dec 31	4,510
1934-35	130.0	+	1.9	1,360.0	Jan 05	1,200
1935-36	77.0	+	2.0	1,490.0	Feb 22	528
1936-37	413.0	+	9.1	6,620.0	Mar 15	1,130
1937-38	3,270.0	+	21.2	15,310.0	Mar 02	9300E
1938-39	NO RECORD					
1939-40	183.0	+	2.9	2,080.0	Feb 01	1,280
1940-41	1100E	+	26.2	18,940.0	Feb 20	8700E
1941-42	47.0	+	.8	540.0	Dec 28	385
1942-43	1100E	+	12.0	8,720.0	Jan 22	2,200
1943-44	1100E	.1	9.6	6,970.0	Feb 22	5,070
1944-45	176.0	.1	1.5	1,090.0	Feb 02	964
1945-46	182.0	+	1.9	1,390.0	Dec 23	905
1946-47	86.0	+	1.4	994.0	Nov 20	567
1947-48	23.0	.0	.2	168.0	Mar 24	276
1948-49	5.0	+	.1	99.0	Dec 26	63
1949-50	35.0	+	.5	379.0	Dec 18	275
1950-51	2.4	+	.1	74.0	Jan 11	21
1951-52	1,990.0	.0	23.3	16,900.0	Jan 15	6,050
1952-53	52.0	+	1.0	725.0	Dec 01	702
1953-54	396.0	.0	2.5	1,820.0	Feb 13	2,090
1954-55	33.0	+	.5	354.0	Jan 18	151
1955-56	337.0	+	1.4	1,030.0	Jan 26	1,540
1956-57	69.0	+	.5	374.0	Feb 23	655
1957-58	599.0	+	10.4	7,460.0	Apr 03	3,950
1958-59	141.0	+	1.1	785.0	Jan 06	1,510
1959-60	76.0	+	.6	422.0	Apr 27	539
1960-61	8.1	+	.1	58.0	Jan 26	28
1961-62	1,150.0	+	10.7	7,720.0	Feb 10	2,790
1962-63	66.0	+	.6	454.0	Feb 09	569
1963-64	17.0	+	.2	178.0	Jan 21	196
1964-65	148.0	+	1.2	886.0	Apr 09	716
1965-66	1,120.0	+	10.0	7,270.0	Dec 29	3,500

M	Data Missing
*	Record incomplete
E	Estimate
N.D.	Not determined
**	Record not Computed
+	Less than 0.05 Acre Feet or less than 0.05 CFS, but greater than 0

RUNOFF – STREAM GAGING STATION PEAK FLOW

TOPANGA CREEK *above* Mouth of Canyon
STATION NO. F54C-R

Season	Daily CFS			Total Runoff (Acre-feet)	Peak Inflow	
	Maximum	Minimum	Mean		Date	CFS
1966-67	569.0	.1	7.0	5,070.0	Jan 24	2,280
1967-68	186.0	.1	2.2	1,570.0	Mar 08	567
1968-69	4,920.0	.1	40.6	29,400.0	Jan 25	12,200
1969-70	84.0	.0	1.2	902.0	Mar 04	844
1970-71	720.0	+	6.3	4,560.0	Jan 29	3,020
1971-72	110.0	.2	1.1	809.0	Dec 27	588
1972-73	1,140.0	.1	8.6	6,250.0	Feb 11	3,840
1973-74	1,060.0	.1	5.7	4,110.0	Jan 07	2,060
1974-75	286.0	.1	3.0	2,200.0	Mar 06	1,670
1975-76	24.0	+	.3	214.0	Feb 09	72
1976-77	30.0	+	.6	405.0	Jan 03	219
1977-78	2,676.0	.1	32.4	23,480.0	Mar 04	10,127
1978-79	425.0	.2	7.2*	5,180.0	Mar 27	2,490
1979-80	3,919.0	.2	32.0	23,236.0	Feb 16	13,800
1980-81	89.7	.1	1.8	1,279.0	Mar 02	219
1981-82	143.8	.2	1.5	1,066.0	Mar 17	650
1982-83	2,274.0	.2	277.0	19,241.0	Jan 27	10,200
1983-84	203.0	.2	2.2	1,445.0	Dec 25	2,612
1984-85	26.3	.2	1.3	943.0	Dec 26	56
1985-86	823.0	.2	10.0	7,211.0	Feb 14	5,135
1986-87	*	*	*	*		*
1987-88	*	*	*	*		*
1988-89	9.7	.1	.4	283.0	Dec 21	32
1989-90	*	*	*	*		*
1990-91	DISCONT.	RESTORED	? -10/97			
1996-97	80.0	.6	3.0	2,140.0	Dec 09	229
1997-98	494.0	.7	24.4	17,640.0	Feb 23	2,470
1998-99	19.0	.5	1.2	839.0	Apr 11	93
1999-00	1,333.0	.3	2.8	2,030.0	Feb 23	1,050
2000-01	257.0	0.5	7.6	5,520	Jan 11	2,820

M	Data Missing
*	Record incomplete
E	Estimate
N.D.	Not determined
**	Record not Computed
+	Less than 0.05 Acre Feet or less than 0.05 CFS, but greater than 0

RUNOFF – STREAM GAGING STATION PEAK FLOW

VERDUGO WASH @ Estelle Avenue
STATION NO. F252-R

Season	Daily CFS			Total Runoff (Acre-feet)	Peak Inflow	
	Maximum	Minimum	Mean		Date	CFS
1928-29	15.0	.0	*	140*	Apr 04	56*
1929-30	14.0	.0	.4	274.0	May 03	80
1930-31	8.4	+	.2	145.0	Apr 26	46
1931-32	39.0	.1	1.0	713.0	Feb 09	145
1932-33	42.0	.1	.4	295.0	Jan 19	391
1933-34	NO RECORD					
1934-35	85*	.0	*	620.0	Jan 05	1020*
1935-36	33.0	.0	.6	463.0	Mar 30	1100*
1936-37	*	.0	*	1,560.0	Dec 27	768
1937-38	1,500.0	.0	7.5	5,450.0	Mar 02	4400E
1938-39	78.0	.0	2.0	1,420.0	Jan 05	520
1939-40	60.0	+	2.0	1,430.0	Jan 08	533
1940-41	357.0	+	10.2	7,370.0	Feb 19	1,120
1941-42	81.0	.8	3.0	2,160.0	Dec 10	440
1942-43	1,020.0	.3	12.0	8,690.0	Jan 23	3,570
1943-44	998.0	.2	7.0	5,040.0	Feb 22	3,160
1944-45	181.0	.6	2.8	2,010.0	Feb 02	1,520
1945-46	135.0	.3	2.7	1,930.0	Dec 22	816
1946-47	234.0	.0	2.7	1,940.0	Dec 25	1,860
1947-48	41.0	.0	.5	382.0	Mar 24	573
1948-49	35.0	.0	.6	433.0	Dec 16	202
1949-50	69.0	.0	.9	638.0	Feb 06	467
1950-51	41.0	.0	.5	383.0	Jan 11	960
1951-52	422.0	.0	7.8	5,630.0	Jan 16	2,920
1952-53	100.0	.0	1.3	968.0	Nov 15	1,520
1953-54	227.0	.0	2.7	1,920.0	Feb 13	1,300
1954-55	134.0	.0	2.0	1,480.0	Jan 18	784
1955-56	550.0	.0	2.5	1,840.0	Jan 26	1,940
1956-57	184.0	.0	1.9	1,400.0	Feb 23	2,960
1957-58	236.0	.0	5.2	3,770.0	Feb 19	1,700
1958-59	232.0	.0	2.0	1,440.0	Feb 16	2,080
1959-60	56.0	.0	1.2	862.0	Jan 11	533
1960-61	98.0	+	.9	667.0	Nov 05	676
1961-62	592.0	.0	6.8	4,830.0	Feb 12	1,880
1962-63	370.0	+	2.0	1,460.0	Feb 09	2,180
1963-64	192.0	.0	2.1	1,510.0	Jan 21	1,640

M	Data Missing
*	Record incomplete
E	Estimate
N.D.	Not determined
**	Record not Computed
+	Less than 0.05 Acre Feet or less than 0.05 CFS, but greater than 0

RUNOFF – STREAM GAGING STATION PEAK FLOW

VERDUGO WASH @ Estelle Avenue
STATION NO. F252-R

Season	Daily CFS			Total Runoff (Acre-feet)	Peak Inflow	
	Maximum	Minimum	Mean		Date	CFS
1964-65	249.0	+	3.8	2,780.0	Apr 08	1,480
1965-66	1,030.0	.1	12.2	8,830.0	Dec 29	3,480
1966-67	422.0	.5	10.4	7,530.0	Jan 22	3,230
1967-68	606.0	.2	9.3	6,730.0	Mar 08	3,460
1968-69	1,850.0	1.8	36.1	26,120.0	Jan 25	5,050
1969-70	261.0	2.0	8.4	6,090.0	Feb 28	2,500
1970-71	931.0	1.8	10.6	7,690.0	Nov 29	5,330
1971-72	476.0	1.2	14.8	4,570.0	Dec 24	1,960
1972-73	897.0	1.0	12.8	9,280.0	Jan 18	4,010
1973-74	671.0	1.8	10.2	7,380.0	Jan 07	2,390
1974-75	373.0	.7	7.7	5,590.0	Dec 04	3,390
1975-76	180.0	.5	6.4	4,560.0	Mar 01	1,190
1976-77	210.0	.3	6.0	4,318.0	Jan 03	2,100
1977-78	1,700.0	+	34.2	24,739.0	Feb 10	9,820
1978-79	286.0	.0	7.3	5,269.0	Mar 27	2,870
1979-80	440.0	1.2	18.1	13,000.0	Feb 16	6,420
1980-81	266.0	1.5	12.0	8,706.0	Jan 29	2,870
1981-82	333.0	1.0	12.5	9,083.0	Apr 01	1,960
1982-83	1,260.0	2.0	37.0	26,750.0	Mar 01	6,714
1983-84	NO RECORD					
1984-85	279.0	1.0	9.2	6,686.0	Dec 19	2,430
1985-86	437.0	1.2	12.1	8,737.0	Mar 08	1,620
1986-87	158.0	1.5	5.0	3,635.0		
1987-88	688.0	2.3	19.3	14,042.0	Feb 01	4,150
1988-89	301.0	.3	9.1	6,262.0	Dec 16	1,700
1989-90	474.0		5.7	4,120.0	Feb 17	1,820
1990-91	544.0	.2	11.1	8,017.0		
1991-92	636.0	.0	20.1	14,621.0	Feb 10	4,110
1992-93	733.0	1.7	32.5	23,520.0	Jun 05	4,320
1993-94	265.0	.0	10.4	7,543.0	Nov 30	2,220
1994-95	1,710.0	1.0	46.5	33,700.0	Jan 10	4,460
1995-96	1,260.0	.8	18.6	13,520.0	Feb 21	3,460
1996-97	1,140.0	1.9	23.3	16,860.0	Dec 22	3,010
1997-98	966.0	3.9	22.3	16,150.0	Feb 07	5,550
1998-99	117.0	3.6	10.0	7,250.0	Nov 28	1,390
1999-00	289.0	2.9	11.7	8,470.0	Feb 16	2,700

M	Data Missing
*	Record incomplete
E	Estimate
N.D.	Not determined
**	Record not Computed
+	Less than 0.05 Acre Feet or less than 0.05 CFS, but greater than 0

RUNOFF – STREAM GAGING STATION PEAK FLOW

VERDUGO WASH @ Estelle Avenue
STATION NO. F252-R

Season	Daily CFS			Total Runoff (Acre-feet)	Peak Inflow	
	Maximum	Minimum	Mean		Date	CFS
2000-01	258.0	3.1	10.9	7,870	Jan 10	1,040

M	Data Missing
*	Record incomplete
E	Estimate
N.D.	Not determined
**	Record not Computed
+	Less than 0.05 Acre Feet or less than 0.05 CFS, but greater than 0

RUNOFF – STREAM GAGING STATION PEAK FLOW

WALNUT CREEK *above* Puente Avenue
STATION NO. F304-R

Season	Daily CFS			Total Runoff (Acre-feet)	Peak Inflow	
	Maximum	Minimum	Mean		Date	CFS
1952-53	47.0	.0	.4	292.0	Dec 01	713
1953-54	297.0	.0	34.9	25,290.0	Feb 13	1,500
1954-55	337.0	.0	29.9	21,640.0	Jan 18	732
1955-56	1,120.0	.0	68.5	49,730.0	Jan 26	3,450
1956-57	361.0	.0	71.2	51,530.0	Feb 28	2,200
1957-58	494.0	.0	11.7	8,490.0	Apr 07	2,510
1958-59	279.0	.0	2.2	1,610.0	Jan 06	2,480
1959-60	163.0	.0	1.8	1,300.0	Jan 12	1,160
1960-61	272.0	.0	12.4	9,010.0	Jan 26	411
1961-62	431.0	*	*	4800*	Feb 11	2,090
1962-63	267.0	+	4.6	3,360.0	Mar 16	1,410
1963-64	232.0	+	3.9	2,860.0	Jan 22	1,280
1964-65	435.0	.2	16.1	11,640.0	Apr 09	3,250
1965-66	646.0	.2	11.0	7,920.0	Dec 29	2,060
1966-67	685.0	.1	20.8	15,060.0	Jan 24	3,360
1967-68	647.0	+	23.3	16,880.0	Mar 08	3,390
1968-69	1,830.0	+	68.4	49,490.0	Feb 25	4,960
1969-70	278.0	+	4.5	3,250.0	Mar 01	2,210
1970-71	384.0	.0	9.4	6,810.0	Dec 21	1,630
1971-72	546.0	.0	4.1	3,070.0	Dec 24	2,650
1972-73	591.0	.0	9.5	6,920.0	Jan 16	2,730
1973-74	749.0	.1	9.2	6,670.0	Jan 07	2,020
1974-75	551.0	+	7.1	5,170.0	Dec 04	4,200
1975-76	255.0	+	3.9	2,800.0	Sep 10	1,200
1976-77	295.0	.0	5.4	3,939.0	May 09	1,920
1977-78	1,970.0	.0	65.0	47,085.0	Mar 04	7,820
1978-79	714.0	.0	17.4	12,619.0	Mar 27	3,020
1979-80	2,490.0	.0	54.5	38,432.0	Feb 16	6,280
1980-81	468.0	.0	4.7	3,406.0	Mar 01	1,840
1981-82	724.0	.0	11.1	8,030.0	Mar 14	2,800
1982-83	1,570.0	.0	45.2	32,750.0	Feb 27	5,850
1983-84	424.0	.0	5.7	4,138.0	Oct 01	2,340
1984-85	276.0	.0	8.2	5,917.0	Nov 13	2,230
1985-86	532.0	.0	13.2	9,537.0	Mar 08	3,580
1986-87	693.0	.0	5.4	3,976.0	Oct 02	2,653
1987-88	454.0	.0	7.3	5,355.0	Oct 22	3,288

M	Data Missing
*	Record incomplete
E	Estimate
N.D.	Not determined
**	Record not Computed
+	Less than 0.05 Acre Feet or less than 0.05 CFS, but greater than 0

RUNOFF – STREAM GAGING STATION PEAK FLOW

WALNUT CREEK *above* Puente Avenue
STATION NO. F304-R

Season	Daily CFS			Total Runoff (Acre-feet)	Peak Inflow	
	Maximum	Minimum	Mean		Date	CFS
1988-89	157.0	.0	2.3	1,626.0	Mar 25	869
1989-90	43.7	.0	2.9	2,066.0	May 28	2,006
1990-91	724.0	.0	11.1	7,924.0	Mar 26	3,386
1991-92	1,090.0	.0	28.1	20,383.0	Feb 12	6,400
1992-93	1,470.0	.0	68.9	49,850.0	Jan 07	5,700
1993-94	249.0	.0	6.6	4,807.0	Apr 26	2,690
1994-95	900.0	.0	24.8	17,970.0	Jan 10	5,040
1995-96	1,200.0	.0	17.0	12,338.0	Jan 31	5,400
1996-97	453.0	.0	12.9	9,360.0	Jan 26	2,810
1997-98	1,310.0	+	39.0	28,250.0	Feb 07	5,670
1998-99	159.0	.0	6.3	4,590.0	Nov 28	1,400
1999-00	381.0	.0	11.0	8,010.0	Feb 23	3,130
2000-01	620.0	0.0	12.1	8,760	Jan 11	2,430

M	Data Missing
*	Record incomplete
E	Estimate
N.D.	Not determined
**	Record not Computed
+	Less than 0.05 Acre Feet or less than 0.05 CFS, but greater than 0

RUNOFF – STREAM GAGING STATION PEAK FLOW

WALNUT CREEK *below* Puddingstone Dam
STATION NO. F40-R

Season	Daily CFS			Total Runoff (Acre-feet)	Peak Inflow	
	Maximum	Minimum	Mean		Date	CFS
1932-33	1.3	0.0	0.1	16.7	Jan 29	33
1933-34	3.2	0.0	0.3	40.0	Sep 17	+
1934-35	1.2	0.0	0.1	44.1	Oct 17	5
1935-36	0.5	0.0	0.1	35.6	Feb 12	13
1936-37	6.1	0.0	0.4	197.4	Feb 06	19
1937-38	99.0	0.1	6.6	4,820.4	Mar 07	104
1938-39	23.0	0.1	1.8	1,337.1	Oct 30	26
1939-40	1.0	0.1	0.2	144.6	Jan 07	7
1940-41	15.7	0.1	2.5	1,790.1	Feb 19	25
1941-42	44.0	0.1	2.3	1,640.5	Dec 03	91
1942-43	141.0	0.1	4.2	3,062.5	Mar 04	287
1943-44	51.0	0.1	1.5	1,120.1	Mar 02	51
1944-45	6.2	0.1	0.6	392.9	Feb 02	10
1945-46	30.0	0.1	3.9	2,833.7	Aug 31	37
1946-47	3.6	0.1	0.2	128.5	Nov 12	6
1947-48	0.7	0.0	0.1	32.1	Jul 13	8
1948-49	0.9	0.0	0.1	21.0	Jul 22	3
1949-50	1.5	0.0	0.0	28.4	Dec 18	5
1950-51	0.2	0.0	0.0	11.3	Dec 14	4
1951-52	2.9	0.0	0.1	108.1	Jan 16	12
1952-53	3.3	0.0	0.2	135.6	Apr 20	4
1953-54	362.0	0.0	42.2	30,644.6	Sep 23	392
1954-55	366.0	0.0	32.4	23,298.9	Dec 12	404
1955-56	396.0	0.1	70.1	50,797.5	Sep 30	389
1956-57	381.0	0.1	74.2	53,783.0	Apr 26	414
1957-58	5.4	0.0	0.4	314.4	Apr 07	16
1958-59	2.7	0.0	0.1	59.6	Jan 06	11
1959-60	0.5	0.0	0.1	41.5	Jan 12	4
1960-61	291.0	0.0	13.0	9,455.8	Nov 16	294
1961-62	1.5	0.0	0.1	48.9		
1962-63	21.0	0.0	0.7	481.9	Nov 28	21
1963-64	0.2	0.0	0.0	20.1	Feb 19	9
1964-65	309.3	0.0	10.4	7,431.4	Mar 20	310
1965-66	110.0	0.0	4.2	3,119.8	Dec 13	112
1966-67	157.0	0.0	13.9	10,035.8	May 05	159
1967-68						

M	Data Missing
*	Record incomplete
E	Estimate
N.D.	Not determined
**	Record not Computed
+	Less than 0.05 Acre Feet or less than 0.05 CFS, but greater than 0

RUNOFF – STREAM GAGING STATION PEAK FLOW

WALNUT CREEK *below* Puddingstone Dam
STATION NO. F40-R

Season	Daily CFS			Total Runoff (Acre-feet)	Peak Inflow	
	Maximum	Minimum	Mean		Date	CFS
1968-69						
1969-70						
1970-71						
1971-72						
1972-73						
1973-74						
1974-75	94.0	0.0	0.0	0.0	Apr 11	450
1975-76	2.0	0.0	0.0	64.9	May 24	20
1976-77	15.2	0.0	0.3	214.2	May 18	31
1977-78	1,080.0	0.0	34.4	24,888.4	Mar 06	1,115
1978-79	37.8	0.2	5.7	4,121.3	Mar 09	80
1979-80	1,070.0	0.2	28.1	20,376.2	Feb 18	1,070
1980-81	31.7	0.1	0.7	515.1	Mar 01	35
1981-82	474.0	0.1	3.6	2,591.2	Mar 18	573
1982-83	550.0	0.1	21.0	15,239.2	Mar 01	622
1983-84	64.0	0.1	2.8	2,049.1	Feb 04	255
1984-85	205.0	0.1	1.2	873.7	Jan 13	216
1985-86	219.0	0.1	4.4	3,150.5	Mar 16	298
1986-87	151.0	0.0	2.6	1,112.9	Jan 14	159
1987-88	107.0	0.1	2.8	2,049.3		108
1988-89	44.0	0.1	2.5	1,842.0	Feb 10	48
1989-90	83.8	0.1	1.3	890.8	Feb 21	161
1990-91	361.0	0.1	3.8	2,774.5	Mar 27	700
1991-92	492.0	0.1	5.3	3,829.3	Feb 12	580
1992-93	608.0	0.1	39.0	28,252.2	Feb 19	863
1993-94	41.9	0.1	1.6	1,136.5	Dec 16	43
1994-95	779.0	0.1	13.7	9,925.9	Mar 06	834
1995-96	290.0	0.2	4.5	3,255.1	Feb 20	652
1996-97	105.0	0.3	5.5	3,957.1	Dec 30	114
1997-98	312.0	0.3	18.9	13,657.4	May 28	818
1998-99	36.0	0.2	1.3	963.9	Oct 01	126
1999-00	131.0	0.3	2.5	1,808.5	Feb 22	230
2000-01	202.0	0.2	4.0	2,930.0	Mar 03	569

M	Data Missing
*	Record incomplete
E	Estimate
N.D.	Not determined
**	Record not Computed
+	Less than 0.05 Acre Feet or less than 0.05 CFS, but greater than 0

APPENDIX E

HYDROLOGIC REPORT 2000 – 2001

RESERVOIRS – YEARLY RESERVOIR OPERATION SUMMARY

RESERVOIRS – YEARLY RESERVOIR OPERATION SUMMARY

Big Dalton Dam

Season	Inflow Annual (AF)	Inflow Max-Day (CFS)	Inflow Min-Day (CFS)	Outflow Annual (AF)	Peak Inflow Date	Peak Inflow Q (CFS)
1929-30	52	3.0	.0	52.0		N.D.
1930-31	41	2.0	.0	41.0	Apr 26	3.0
1931-32	690	54.0	.0	688.0	Feb 09	86.0
1932-33	79	5.0	.0	81.0	Jan 20	12.0
1933-34	448	93.0	.0	448.0	Jan 01	227.0
1934-35	593	21.0	.0	575.0	Apr 08	49.0
1935-36	360	12.0	.0	370.0	Feb 11	72.0
1936-37	1,879	51.0	.0	1,868.0	Feb 06	98.0
1937-38	3,271	415.0	.0	3,192.0	Mar 02	1,320.0
1938-39	280	4.0	.0	288.0	Jan 05	26.0
1939-40	232	4.0	.0	236.0	Jan 08	29.0
1940-41	2,767	56.0	+	2,748.0	Mar 04	88.0
1941-42	209	2.0	.0	233.0	Mar 14	6.0
1942-43	3,143	160.0	.0	3,110.0	Jan 23	595.0
1943-44	1,087	109.0	+	1,085.0	Feb 22	226.0
1944-45	734	19.0	.0	729.0	Nov 11	47.0
1945-46	525	40.0	.0	509.0	Dec 23	148.0
1946-47	492	16.0	.0	512.0	Nov 20	56.0
1947-48	58	1.0	.0	8.0	Apr 28	9.7
1948-49	94	1.0	.0	113.0	Dec 17	3.3
1949-50	142	2.0	.0	130.0	Feb 06	3.5
1950-51	27	2.0	+	14.0	Jan 11	4.8
1951-52	1,626	73.0	.0	1,577.0	Jan 16	154.0
1952-53	120	1.0	+	68.0	Dec 01	4.8
1953-54	346	13.0	.0	359.0	Jan 25	53.0
1954-55	87	1.0	+	5.0	Jan 18	2.4
1955-56	190	14.0	+	213.0	Jan 26	56.0
1956-57	76	1.0	+	27.0	Jan 13	1.8
1957-58	2,104	97.0	.0	2,052.0	Apr 03	169.0
1958-59	160	6.0	+	133.0	Feb 16	26.0
1959-60	54	1.0	+	11.0	Apr 27	4.8
1960-61	187	18.0	.0	1,510.0	Nov 05	462.0
1961-62	1,222	63.0	.0	933.0	Dec 02	1,130.0
1962-63	248	20.0	.0	159.0	Feb 09	92.0
1963-64	165	3.0	.0	300.0	Mar 22	30.0
1964-65	380	18.0	.0	15.0	Apr 09	73.0
1965-66	2,210	113.0	.0	2,013.0	Nov 22	489.0
1966-67	4,787	292.0	.0	4,790.0	Dec 06	685.0
1967-68	771	15.0	.0	681.0	Nov 19	56.0

N.D. Not determined
R.I. Records incomplete
+ Less than 0.05 Acre Feet or less than 0.05 CFS, but greater than 0

RESERVOIRS – YEARLY RESERVOIR OPERATION SUMMARY

Big Dalton Dam

Season	Inflow Annual (AF)	Inflow		Outflow Annual (AF)	Peak Inflow	
		Max-Day (CFS)	Min-Day (CFS)		Date	Q (CFS)
1968-69	13,251	1,210.0	.0	12,995.0	Jan 25	1,540.0
1969-70	728	15.0	.0	610.0	Feb 28	91.0
1970-71	856	22.0	.0	1,100.0	Dec 21	38.0
1971-72	217	10.0	+		Dec 27	11.0
1972-73	1,386	100.0	+	1,046.0	Feb 11	163.0
1973-74	860	43.0	.0	1,030.0	Jan 07	68.0
1974-75	379	4.0	.0	211.0	Mar 06	7.8
1975-76	237	6.0	.0	467.0	Mar 01	17.0
1976-77	171	3.0	.0	20.0	Jan 03	14.0
1977-78	6,182	232.0	.0	6,234.0	Mar 04	500.0
1978-79	R.I.					N.D.
1979-80	R.I.					N.D.
1980-81	349	5.0	.0	364.0	Jan 29	29.0
1981-82	1,018	50.0	.0	923.0	Mar 17	53.0
1982-83	5,562	240.0	.0	5,532.0	Mar 01	350.0
1983-84	703	8.0	.0	704.0	Dec 25	16.0
1984-85	611	10.0	.0	585.0	Dec 19	16.0
1985-86	886	20.0	.0	865.0	Mar 16	3.0
1986-87	203	4.0	.0	196.0	Jan 04	3.0
1987-88	342	7.0	.0	324.0	Jan 17	17.0
1988-89	382	13.0	.0	340.0	Feb 04	31.0
1989-90	112	3.0	.0	90.0	Feb 17	8.0
1990-91	470	26.0	.0	453.0	Mar 27	62.0
1991-92	1,259	37.0	.0	1,243.0	Feb 12	121.0
1992-93	7,102	322.0	.0	7,146.0	Jan 18	385.0
1993-94	369	3.0	.0	300.0	Feb 07	4.0
1994-95	3,839	73.0	.0	3,820.0	Jan 10	127.0
1995-96	1,247	54.0	.0	1,215.0	Feb 20	96.0
1996-97	1,127	7.6	.0	1,108.0		N.D.
1997-98	4,703	213.0	.0	4,642.0	Feb 23	344.0
1998-99						N.D.
1999-00	208	17.0	.0	218.0	Mar 09	4.6
2000-01	271	4.7	0	256	Feb 13	38.0

N.D. Not determined
R.I. Records incomplete
+ Less than 0.05 Acre Feet or less than 0.05 CFS, but greater than 0

RESERVOIRS – YEARLY RESERVOIR OPERATION SUMMARY

Big Tujunga Dam

Season	Inflow Annual (AF)	Inflow		Outflow Annual (AF)	Peak Inflow	
		Max-Day (CFS)	Min-Day (CFS)		Date	Q (CFS)
1932-33	4,342	218.0	.0	4,518.0		N.D.
1933-34	4,441	994.0	.0	4,234.0	Jan 01	2,430.0
1934-35	11,992	380.0	.0	10,698.0	Apr 08	718.0
1935-36	3,875	130.0	.0	5,508.0	Feb 12	312.0
1936-37	26,969	803.0	.6	25,729.0	Feb 06	1,740.0
1937-38	64,855	12,030.0	1.0	65,022.0	Mar 02	32,940.0
1938-39	9,905	327.0	1.2	9,106.0	Dec 19	666.0
1939-40	7,058	337.0	.4	7,197.0	Jan 08	2,300.0
1940-41	59,402	1,200.0	.9	59,086.0	Mar 04	1,570.0
1941-42	7,120	70.0	.8	7,724.0	Dec 10	134.0
1942-43	52,877	5,700.0	1.1	52,919.0	Jan 23	17,850.0
1943-44	42,270	2,780.0	5.0	41,722.0	Feb 22	4,770.0
1944-45	13,206	475.0	1.2	12,231.0	Nov 11	1,850.0
1945-46	11,543	1,150.0	.8	12,383.0	Mar 30	2,310.0
1946-47	12,987	674.0	.9	12,827.0	Nov 13	1,690.0
1947-48	2,679	44.0	.7	3,579.0	Apr 29	85.0
1948-49	2,129	16.0	.1	1,645.0	Mar 11	18.0
1949-50	2,029	32.0	.2	1,905.0	Feb 06	43.0
1950-51	841	7.7	.1	1,235.0	Apr 29	17.0
1951-52	27,288	896.0	.3	26,125.0	Jan 18	2,030.0
1952-53	3,496	35.0	.1	4,873.0	Nov 15	108.0
1953-54	5,389	212.0	.1	5,290.0	Jan 25	500.0
1954-55	2,623	30.0	.2	2,282.0	Jan 18	52.0
1955-56	3,026	233.0	.4	3,433.0	Jan 26	582.0
1956-57	1,967	107.0	.1	1,660.0	Jan 13	283.0
1957-58	27,558	1,220.0	.1	27,563.0	Apr 03	2,860.0
1958-59	3,405	172.0	.1	3,152.0	Jan 06	213.0
1959-60	1,183	12.0	.3	1,653.0	Jan 12	24.0
1960-61	838	14.0	.4	718.0	Nov 06	35.0
1961-62	16,711	2,540.0	.4	16,776.0	Feb 11	5,050.0
1962-63	1,715	90.0	.2	1,359.0	Feb 10	237.0
1963-64	1,526	40.0	.0	2,039.0	Jan 22	90.0
1964-65	2,429	60.0	.4	1,503.0	Apr 09	165.0
1965-66	30,772	2,810.0	.6	29,779.0	Dec 29	10,800.0
1966-67	30,158	1,180.0	1.6	30,338.0	Dec 06	2,600.0
1967-68	10,584	352.0	1.0	11,446.0	Nov 21	725.0
1968-69	107,609	7,800.0	.0	106,462.0	Feb 25	17,800.0
1969-70	11,643	372.0	1.5	11,624.0	Mar 01	613.0
1970-71	12,394	1,100.0	2.1	11,412.0	Nov 29	3,970.0

N.D. Not determined
R.I. Records incomplete
\+ Less than 0.05 Acre Feet or less than 0.05 CFS, but greater than 0

RESERVOIRS – YEARLY RESERVOIR OPERATION SUMMARY

Big Tujunga Dam

Season	Inflow Annual (AF)	Inflow		Outflow Annual (AF)	Peak Inflow	
		Max-Day (CFS)	Min-Day (CFS)		Date	Q (CFS)
1971-72	4,118	194.0	.5	3,374.0	Dec 24	462.0
1972-73	15,375	1,914.0	.5	14,680.0	Feb 11	6,320.0
1973-74	8,663	256.0	.9	5,582.0	Jan 07	561.0
1974-75	5,442	198.0	.3	8,666.0	Mar 06	315.0
1975-76	4,482	408.0	.1	3,863.0	Feb 09	1,400.0
1976-77	3,928	164.0	1.2	3,547.0	Jan 03	878.0
1977-78	R.I.					N.D.
1978-79	R.I.					N.D.
1979-80	R.I.					N.D.
1980-81	10,927	226.0	3.0	11,470.0	Jan 29	496.0
1981-82	16,578	569.0	3.8	16,557.0	Mar 17	1,499.0
1982-83	95,294	7,065.0	3.8	93,880.0	Mar 01	10,007.0
1983-84	10,861	337.0	.0	11,314.0	Dec 25	808.0
1984-85	7,362	200.0	.7	6,952.0	Dec 19	361.0
1985-86	12,370	529.0	.4	11,757.0	Jan 30	969.0
1986-87	2,943	28.0	.0	2,843.0	Jan 04	53.0
1987-88	7,121	190.0	.0	6,902.0	Feb 29	685.0
1988-89	4,300	91.0	.0	4,208.0	Feb 10	131.0
1989-90	929	41.0	.0	741.0	Feb 17	62.0
1990-91	8,074	530.0	.0	7,992.0	Mar 01	1,871.0
1991-92	31,767	1,249.0	.1	31,414.0	Feb 12	5,167.0
1992-93	89,492	3,490.0	.2	89,311.0	Feb 19	7,774.0
1993-94	8,635	80.0	.0	9,241.0	Feb 08	170.0
1994-95	34,562	1,005.0	.2	34,532.0	Jan 10	3,608.0
1995-96	8,491	477.0	1.1	7,970.0	Feb 21	530.0
1996-97	9,025	156.0	.3	8,080.0		N.D.
1997-98	48,676	3,370.0	.4	48,281.0	Feb 23	8,288.0
1998-99						N.D.
1999-00	5,740	739.0	.0	5,923.0	Feb 22	159.4
2000-01	8102	343	0	8032	Feb 13	399.4

N.D. Not determined
R.I. Records incomplete
+ Less than 0.05 Acre Feet or less than 0.05 CFS, but greater than 0

RESERVOIRS – YEARLY RESERVOIR OPERATION SUMMARY

Cogswell Dam

Season	Inflow Annual (AF)	Inflow		Outflow Annual (AF)	Peak Inflow	
		Max-Day (CFS)	Min-Day (CFS)		Date	Q (CFS)
1934-35	3,517	54.0	.1	3,517.0		N.D.
1935-36	7,154	265.0	.0	7,138.0		N.D.
1936-37	32,986	943.0	.1	32,996.0	Feb 14	1,240.0
1937-38	60,336	7,990.0	1.4	58,799.0	Mar 02	24,710.0
1938-39	11,560	673.0	.9	11,369.0	Sep 25	1,360.0
1939-40	9,634	309.0	.8	9,569.0	Jan 08	2,020.0
1940-41	61,270	1,400.0	.5	59,951.0	Feb 20	1,640.0
1941-42	6,080	108.0	.3	7,331.0	Dec 10	294.0
1942-43	54,700	2,320.0	.7	53,703.0	Jan 23	15,000.0
1943-44	38,150	2,860	1.4	37,460.0	Feb 22	4,650.0
1944-45	11,887	424.0	1.4	10,385.0	Nov 11	1,600.0
1945-46	14,711	1,260.0	.8	16,377.0	Mar 30	2,790.0
1946-47	20,135	1,030.0	.1	20,135.0	Dec 25	2,290.0
1947-48	3,103	86.0	.3	3,032.0	Apr 29	262.0
1948-49	2,911	32.0	.3	2,765.0	Jan 20	65.0
1949-50	3,778	99.0	.4	3,536.0	Dec 18	239.0
1950-51	887	9.6	.3	568.0	Apr 29	24.0
1951-52	33,783	1,260.0	.3	25,439.0	Jan 16	2,640.0
1952-53	4,410	70.0	.8	12,345.0	Dec 01	254.0
1953-54	8,004	412.0	.3	7,500.0	Jan 24	1,030.0
1954-55	3,941	51.0	.3	3,165.0	Apr 30	176.0
1955-56	4,070	419.0	.1	3,564.0	Jan 26	1,040.0
1956-57	3,421	225.0	.2	3,757.0	Jan 13	685.0
1957-58	36,476	1,460.0	.0	34,530.0	Apr 03	3,710.0
1958-59	4,904	340.0	.4	6,205.0	Jan 06	1,760.0
1959-60	1,935	27.0	.5	2,006.0	Jan 10	65.0
1960-61	1,106	36.0	.4	572.0	Jan 26	116.0
1961-62	25,497	3,480.0	.3	23,255.0	Feb 11	7,010.0
1962-63	3,220	153.0	.6	4,783.0	Feb 09	1,017.0
1963-64	2,587	89.0	.4	2,647.0	Apr 01	276.0
1964-65	5,037	266.0	.3	4,159.0	Apr 09	479.0
1965-66	41,747	2,640.0	.3	42,170.0	Dec 29	9,220.0
1966-67	40,504	1,860.0	.6	32,757.0	Dec 06	4,650.0
1967-68	9,569	338.0	.6	12,713.0	Nov 19	893.0
1968-69	95,676	6,380.0	.1	90,488.0	Jan 25	15,700.0
1969-70	10,222	410.0	1.0	13,859.0	Feb 28	1,020.0
1970-71	10,822	1,030.0	.8	11,683.0	Nov 29	2,930.0
1971-72	4,009	297.0	.4	4,557.0	Dec 24	798.0
1972-73	19,613	2,210.0	.4	16,632.0	Feb 11	6,970.0

N.D. Not determined
R.I. Records incomplete
\+ Less than 0.05 Acre Feet or less than 0.05 CFS, but greater than 0

RESERVOIRS – YEARLY RESERVOIR OPERATION SUMMARY

Cogswell Dam

Season	Inflow Annual (AF)	Inflow		Outflow Annual (AF)	Peak Inflow	
		Max-Day (CFS)	Min-Day (CFS)		Date	Q (CFS)
1973-74	12,746	424.0	1.1	12,051.0	Jan 07	880.0
1974-75	6,610	241.0	1.1	8,344.0	Mar 06	432.0
1975-76	5,550	509.0	.1	5,040.0	Feb 09	824.0
1976-77	4,955	206.0	.3	5,000.0	Jan 03	421.0
1977-78	86,754	3,852.0	.0	86,030.0	Feb 10	11,200.0
1978-79	23,057	519.0	1.9	24,083.0	Jan 05	343.0
1979-80	59,867	3,028.0	1.8	57,887.0	Feb 16	6,196.0
1980-81	5,299	127.0	.0	7,752.0	Jan 29	511.0
1981-82	14,258	605.0	.4	9,059.0	Mar 17	1,238.0
1982-83	77,775	3,966.0	1.4	78,446.0	Mar 02	5,898.0
1983-84	9,561	272.0	2.8	12,495.0	Dec 25	790.0
1984-85	7,167	284.0	.0	6,383.0	Dec 19	531.0
1985-86	15,584	560.0	.6	15,314.0	Feb 15	916.0
1986-87	2,194	35.0	.1	2,669.0	Jan 04	63.0
1987-88	11,621	282.0	.0	10,919.0	Mar 01	528.0
1988-89	4,953	99.0	.0	5,105.0	Feb 04	175.0
1989-90	1,903	61.0	.0	1,775.0	Feb 18	99.0
1990-91	10,229	605.0	.0	10,921.0	Mar 01	1,063.0
1991-92	39,922	2,352.0	.2	39,922.0	Feb 11	5,231.0
1992-93	83,608	2,330.0	.0	78,936.0	Feb 19	4,135.0
1993-94	6,896	105.0	.2	11,142.0	Feb 08	162.0
1994-95	41,056	1,002.0	.1	41,072.0	Jan 10	2,479.0
1995-96	8,780	496.0	.1	8,777.0	Feb 20	1,056.0
1996-97	9,428	192.0	.2	8,089.0		N.D.
1997-98	47,709	3,476.0	.5	41,403.0	Feb 23	7,343.0
1998-99						N.D.
1999-00	5,066	258.0	.0	5,083.0	Feb 21	365.1
2000-01	10268	210	0.0	10412	Feb 13	761.6

N.D. Not determined
R.I. Records incomplete
+ Less than 0.05 Acre Feet or less than 0.05 CFS, but greater than 0

RESERVOIRS – YEARLY RESERVOIR OPERATION SUMMARY

Devil's Gate Dam

Season	Inflow Annual (AF)	Inflow		Outflow Annual (AF)	Peak Inflow	
		Max-Day (CFS)	Min-Day (CFS)		Date	Q (CFS)
1933-34	2,938	757.0	.0	.0	Jan 01	3,310.0
1934-35	3,843	N.D.	.0	N.D.	Oct 17	1,310.0
1935-36	3,457	N.D.	.0	86.0	Feb 02	939.0
1936-37	12,030	340.0	.0	2,818.0	Feb 06	852.0
1937-38	25,436	3,720.0	.0	17,496.0	Mar 02	10,840.0
1938-39	3,044	200.0	.0	634.0	Dec 19	201.0
1939-40	1,350	142.0	.0	745.0	Jan 08	859.0
1940-41	27,013	1,380.0	.0	24,582.0	Feb 20	3,870.0
1941-42	689	91.0	.0	443.0	Dec 10	479.0
1942-43	25,655	2,560.0	.0	23,552.0	Jan 23	7,740.0
1943-44	8,680	1,450.0	.0	7,905.0	Feb 22	2,310.0
1944-45	2,341	288.0	.0	2,031.0	Nov 11	949.0
1945-46	2,994	435.0	.0	1,343.0	Dec 22	1,040.0
1946-47	4,045	285.0	.0	3,949.0	Dec 25	1,280.0
1947-48	260	32.0	.0	57.0	Mar 24	444.0
1948-49	185	14.0	.0	37.0	Mar 10	59.0
1949-50	318	37.0	.0	81.0	Feb 06	237.0
1950-51	171	18.0	.0	17.0	Jan 11	468.0
1951-52	11,508	792.0	.0	11,377.0	Jan 16	2,650.0
1952-53	563	51.0	.0	194.0	Nov 15	823.0
1953-54	1,324	178.0	.0	488.0	Jan 25	565.0
1954-55	651	50.0	.0	154.0	Jan 18	334.0
1955-56	2,229	591.0	.0	1,339.0	Jan 26	1,420.0
1956-57	926	111.0	.0	142.0	Feb 23	795.0
1957-58	9,642	447.0	.0	6,508.0	Apr 03	1,020.0
1958-59	1,055	160.0	.0	465.0	Jan 06	1,280.0
1959-60	1,052	40.0	.0	131.0	Jan 11	329.0
1960-61	1,035	131.0	.0	488.0	Nov 06	1,260.0
1961-62	7,014	970.0	.0	5,260.0	Feb 11	1,840.0
1962-63	1,215	289.0	.0	251.0	Feb 09	1,290.0
1963-64	860	81.0	.0	170.0	Jan 21	727.0
1964-65	1,721	170.0	.0	246.0	Apr 09	755.0
1965-66	15,667	1,340.0	.0	13,199.0	Nov 22	3,740.0
1966-67	16,391	934.0	.0	6,057.0	Dec 06	2,130.0
1967-68	6,858	698.0	.0	2,233.0	Nov 19	1,310.0
1968-69	44,817	4,220.0	.0	39,164.0	Jan 25	7,910.0
1969-70	2,109	202.0	.0	1,311.0	Mar 04	534.0
1970-71	3,098	682.0	.0	1,894.0	Nov 29	1,760.0
1971-72	798	152.0	.0	+	Dec 24	433.0

N.D. Not determined
R.I. Records incomplete
+ Less than 0.05 Acre Feet or less than 0.05 CFS, but greater than 0

RESERVOIRS – YEARLY RESERVOIR OPERATION SUMMARY

Devil's Gate Dam

Season	Inflow Annual (AF)	Inflow		Outflow Annual (AF)	Peak Inflow	
		Max-Day (CFS)	Min-Day (CFS)		Date	Q (CFS)
1972-73	8,298	1,517.0	.0	5,615.0	Feb 11	3,520.0
1973-74	4,032	589.0	.0	2,749.0	Jan 07	1,100.0
1974-75	2,024	237.0	.0	711.0	Mar 06	451.0
1975-76	2,172	281.0	.0	1,204.0	Sep 10	869.0
1976-77	1,682	177.0	.0	1,593.0	Jan 03	587.0
1977-78	R.I.				Mar 04	6,941.0
1978-79	R.I.				Mar 28	269.0
1979-80	R.I.				Feb 16	2793*
1980-81	1,857	84.0	.0	2,337.0	Jan 29	802.0
1981-82	6,574	199.0	.0	6,569.0	Mar 17	272.0
1982-83	26,491	2,571.0	.0	26,338.0	Mar 02	3,419.0
1983-84	937	100.0	.0	1,074.0	Oct 01	105.0
1984-85	1,320	129.0	.0	1,320.0	Dec 19	480.0
1985-86	2,877	166.0	.0	2,877.0	Feb 15	282.0
1986-87	N.D.	N.D.		N.D.	Jan 04	202.0
1987-88	2,346	96.0	.0	2,346.0	Oct 31	226.0
1988-89	113	18.0	.0	113.0	Dec 16	54.0
1989-90	142	12.0	.0	142.0	Feb 17	88.0
1990-91	4,997	523.0	.0	4,997.0	Mar 01	924.0
1991-92	19,885	1,310.0	.0	19,885.0	Feb 12	3,107.0
1992-93	60,794	1,134.0	.0	60,793.0	Jan 17	2,213.0
1993-94	1,456	21.0	.0	1,456.0	Feb 17	25.0
1994-95	21,173	1,030.0	.0	21,173.0	Jan 10	2,493.0
1995-96	3,119	414.0	.0	3,120.0	Feb 21	584.0
1996-97	R.I.					N.D.
1997-98	R.I.					N.D.
1998-99						N.D.
1999-00	14,829	1,138.0	.0	15,857.0	Mar 06	1,454.3
2000-01						N.D.

N.D. Not determined
R.I. Records incomplete
+ Less than 0.05 Acre Feet or less than 0.05 CFS, but greater than 0

RESERVOIRS – YEARLY RESERVOIR OPERATION SUMMARY

Eaton Wash Dam

Season	Inflow Annual (AF)	Inflow Max-Day (CFS)	Inflow Min-Day (CFS)	Outflow Annual (AF)	Peak Inflow Date	Peak Inflow Q (CFS)
1936-37	3,062	112.0	.0	1,502.0		N.D.
1937-38	6,993	883.0	.0	5,213.0	Mar 02	2,670.0
1938-39	340	51.0	.0	84.0	Dec 18	169.0
1939-40	390	31.0	.0	96.0	Jan 08	220.0
1940-41	7,323	188.0	.0	6,089.0	Feb 20	426.0
1941-42	78	11.0	.0	.0	Dec 10	73.0
1942-43	7,212	498.0	.0	6,399.0	Jan 23	1,700.0
1943-44	2,901	265.0	.0	1,970.0	Feb 22	371.0
1944-45	331	52.0	.0	101.0	Nov 11	204.0
1945-46	514	77.0	.0	265.0	Dec 23	284.0
1946-47	746	74.0	.0	507.0	Nov 13	286.0
1947-48	64	11.0	.0	5.0	Apr 28	90.0
1948-49	36	4.7	.0	1.2	Jan 20	10.0
1949-50	188	23.0	.0	61.0	Dec 18	88.0
1950-51	44	3.8	.0	7.5	Jan 11	80.0
1951-52	2,636	151.0	.0	2,020.0	Jan 16	495.0
1952-53	145	18.0	.0	.0	Dec 01	225.0
1953-54	533	56.0	.0	202.0	Jan 19	220.0
1954-55	146	14.0	.0	.0	Jan 18	91.0
1955-56	330	123.0	.0	151.0	Jan 26	422.0
1956-57	127	20.0	.0	9.2	Feb 23	138.0
1957-58	3,114	150.0	.0	2,248.0	Apr 01	443.0
1958-59	301	46.0	.0	152.0	Jan 06	702.0
1959-60	60	5.8	.0	.0	Jan 11	48.0
1960-61	61	10.0	.0	.0	Jan 26	39.0
1961-62	1,729	322.0	.0	1,299.0	Feb 11	737.0
1962-63	177	51.0	.0	19.0	Feb 09	198.0
1963-64	222	38.0	.0	33.0	Jan 22	246.0
1964-65	534	49.0	.0	328.0	Apr 09	220.0
1965-66	5,400	415.0	.0	4,267.0	Dec 29	1,520.0
1966-67	3,856	317.0	.0	1,907.0	Dec 06	595.0
1967-68	1,304	133.0	.0	404.0	Nov 19	331.0
1968-69	20,866	1,110	.0	18,644.0	Jan 25	2,540.0
1969-70	718	90.0	.0	527.0	Mar 05	878.0
1970-71	809	178.0	.0	581.0	Nov 29	457.0
1971-72	207	42.0	.0	+	Dec 27	107.0
1972-73	4,299	532.0	.0	2,844.0	Feb 11	587.0
1973-74	2,420	200.0	.0	1,607.0	Jan 07	309.0
1974-75	672	79.0	.0	418.0	Mar 06	81.0

N.D. Not determined
R.I. Records incomplete
\+ Less than 0.05 Acre Feet or less than 0.05 CFS, but greater than 0

RESERVOIRS – YEARLY RESERVOIR OPERATION SUMMARY

Eaton Wash Dam

Season	Inflow Annual (AF)	Inflow		Outflow Annual (AF)	Peak Inflow	
		Max-Day (CFS)	Min-Day (CFS)		Date	Q (CFS)
1975-76	893	74.0	.0	424.0	Mar 01	175.0
1976-77	461	36.0	.0	281.0	Jan 03	191.0
1977-78	R.I.					N.D.
1978-79	R.I.					N.D.
1979-80	R.I.					N.D.
1980-81	578	45.0	.0	587.0	Mar 01	195.0
1981-82	1,676	121.0	.0	1,530.0	Mar 17	200.0
1982-83	19,050	732.0	.0	18,941.0	Mar 02	1,982.0
1983-84	1,918	61.0	.0	1,929.0	Dec 25	188.0
1984-85	701	23.0	.0	698.0	Dec 19	23.0
1985-86	1,937	56.0	.0	1,933.0	Jan 30	223.0
1986-87	N.D.	27.0	.0	N.D.	Jan 04	23.0
1987-88	848	55.0	.0	649.0	Feb 29	228.0
1988-89	322	26.0	.0	182.0	Dec 16	74.0
1989-90	233	40.0	.0	131.0	Feb 17	63.0
1990-91	1,602	127.0	.0	1,589.0	Mar 01	239.0
1991-92	5,693	295.0	.0	5,678.0	Feb 11	1,068.0
1992-93	14,662	340.0	.0	14,661.0	Jan 07	937.0
1993-94	1,100	26.0	.0	984.0	Feb 08	51.0
1994-95	7,500	225.0	.0	7,461.0	Jan 10	757.0
1995-96	1,891	158.0	.0	1,865.0	Feb 20	266.0
1996-97	R.I.					N.D.
1997-98	6,514	308.0	.0	6,514.0	Feb 23	1,418.0
1998-99						N.D.
1999-00	626	55.0	.0	799.0	Feb 28	70.0
2000-01	N.D.				Feb 13	179.4

N.D. Not determined
R.I. Records incomplete
+ Less than 0.05 Acre Feet or less than 0.05 CFS, but greater than 0

RESERVOIRS – YEARLY RESERVOIR OPERATION SUMMARY

Live Oak Dam

Season	Inflow Annual (AF)	Inflow		Outflow Annual (AF)	Peak Inflow	
		Max-Day (CFS)	Min-Day (CFS)		Date	Q (CFS)
1932-33	0	.0	.0	.0		.0
1933-34	N.D.	N.D.	N.D.	142.0		N.D.
1934-35	27	2.3	.0	27.0	Apr 08	16.0
1935-36	N.D.	4.1	.0	.0		N.D.
1936-37	494	35.0	.0	413.0	Feb 06	.0
1937-38	800	147.0	.0	785.0	Mar 02	339.0
1938-39	21	1.0	.0	3.2	Feb 03	1.4
1939-40	16	1.2	.0	1.4	Jan 08	11.0
1940-41	719	39.0	.0	718.0	Mar 04	90.0
1941-42	0	+	+	.0		+
1942-43	827	78.0	.0	827.0	Jan 22	170.0
1943-44	218	33.0	.0	218.0	Feb 22	74.0
1944-45	177	9.4	.0	177.0	Feb 02	67.0
1945-46	105	22.0	.0	89.0	Dec 23	127.0
1946-47	64	7.5	.0	45.0	Nov 20	25.0
1947-48	0	.0	.0	.0		N.D.
1948-49	0	.0	.0	.0		N.D.
1949-50	5	.3	.0	3.6	Dec 19	2.6
1950-51	0	.0	.0	.0		N.D.
1951-52	362	34.0	.0	343.0	Jan 16	148.0
1952-53	2	+	.0	3.2	Dec 01	.8
1953-54	78	13.0	.0	64.0	Jan 25	82.0
1954-55	0	+	.0	.3		N.D.
1955-56	77	25.0	.0	72.0	Jan 26	128.0
1956-57	2	.1	.0	.1	Jan 13	1.1
1957-58	699	38.0	.0	699.0	Apr 03	67.0
1958-59	6	.8	.0	5.4	Jan 06	9.2
1959-60	0	.0	.0	.0		N.D.
1960-61	5	.7	.0	.0	Nov 06	22.0
1961-62	186	29.0	.0	111.0	Nov 20	366.0
1962-63	13	5.8	.0	5.4	Feb 09	23.0
1963-64	5	.8	.0	.0	Mar 22	6.2
1964-65	20	6.8	.0	15.0	Apr 09	58.0
1965-66	243	23.0	.0	241.0	Nov 22	116.0
1966-67	699	112.0	+	672.0	Dec 06	360.0
1967-68	131	6.0	.0	130.0	Mar 08	39.0
1968-69	2,146	152.0	.0	2,115.0	Jan 25	403.0
1969-70	258	8.4	.0	258.0	Feb 28	14.0
1970-71	243	7.2	.0	243.0	Dec 21	16.0

N.D. Not determined
R.I. Records incomplete
+ Less than 0.05 Acre Feet or less than 0.05 CFS, but greater than 0

RESERVOIRS – YEARLY RESERVOIR OPERATION SUMMARY

Live Oak Dam

Season	Inflow Annual (AF)	Inflow		Outflow Annual (AF)	Peak Inflow	
		Max-Day (CFS)	Min-Day (CFS)		Date	Q (CFS)
1971-72	71	3.5	.0	71.0	Dec 24	5.0
1972-73	291	34.0	.0	290.0	Feb 11	52.0
1973-74	132	13.0	.0	132.0	Jan 07	31.0
1974-75	71	2.0	.0	61.0	Mar 06	14.0
1975-76	30	2.5	.0	24.0	Mar 01	7.2
1976-77	32	2.0	.0	33.0	Jan 03	13.0
1977-78	1,517	70.9	.0	1,517.0	Mar 04	187.0
1978-79	655	18.1	.0	655.0	Mar 27	43.4
1979-80	R.I.					N.D.
1980-81	240	3.0	.0	237.0	Mar 02	4.0
1981-82	421	19.0	.0	421.0	Mar 18	32.0
1982-83	1,778	72.0	.0	1,780.0	Mar 01	144.0
1983-84	447	12.0	.0	448.0	Dec 25	47.0
1984-85	162	3.6	.0	162.0	Dec 19	5.0
1985-86	192	4.4	.0	192.0	Feb 16	7.0
1986-87	37	.8	.0	37.0	Jan 04	10.0
1987-88	70	2.7	.0	69.0	Jan 17	4.0
1988-89	96	6.0	.0	93.0	Feb 04	11.0
1989-90	51	2.0	.0	51.0	Feb 17	3.0
1990-91	205	22.0	.0	204.0	Mar 01	44.0
1991-92	277	26.0	.0	277.0	Feb 12	112.0
1992-93	1,762	55.0	.0	1,759.0	Jan 07	68.0
1993-94	230	2.8	.0	235.0	Mar 19	17.0
1994-95	820	32.0	.0	820.0	Jan 10	86.0
1995-96	357	37.0	.0	357.0	Feb 20	75.0
1996-97	R.I.					N.D.
1997-98	828	50.0	.0	782.0	Feb 23	139.0
1998-99						N.D.
1999-00	0	31.0	.0	.0	Feb 21	2.1
2000-01						N.D.

N.D. Not determined
R.I. Records incomplete
+ Less than 0.05 Acre Feet or less than 0.05 CFS, but greater than 0

RESERVOIRS – YEARLY RESERVOIR OPERATION SUMMARY

Morris Dam

Season	Inflow Annual (AF)	Inflow		Outflow Annual (AF)	Peak Inflow	
		Max-Day (CFS)	Min-Day (CFS)		Date	Q (CFS)
1937-38	339,303	18,590.0	.0	337,955.0	Mar 02	70,300.0
1938-39	62,367	890.0	.0	75,278.0	Dec 20	N.D.
1939-40	41,367	439.0	1.0	51,030.0	Mar 06	N.D.
1940-41	294,818	4,137.0	1.0	263,819.0	Feb 20	4,230.0
1941-42	21,562	419.0	.1	16,504.0	Nov 07	N.D.
1942-43	251,552	10,380.0	.0	247,717.0	Jan 23	12,660.0
1943-44	149,889	2,667.0	.0	147,194.0	May 25	5,840.0
1944-45	49,942	1,291.0	.0	47,340.0	Mar 26	3,590.0
1945-46	53,467	987.0	.0	62,578.0	Apr 04	4,880.0
1946-47	60,442	3,369.0	.0	55,718.0	Dec 28	9,300.0
1947-48	14,004	973.0	.0	17,392.0	Dec 12	2,380.0
1948-49	5,387	799.0	.0	3,777.0	Jun 02	N.D.
1949-50	1,901	70.0	.0	834.0	Dec 05	N.D.
1950-51	5,066	180.0	.0	3,446.0	Apr 21	N.D.
1951-52	76,910	3,188.0	.0	69,966.0	Jan 16	5,200.0
1952-53	47,762	1,003.0	.0	52,075.0	Nov 03	1,280.0
1953-54	30,334	1,574.0	.0	29,069.0	Apr 10	3,590.0
1954-55	1,593	299.0	.0	557.0	Apr 15	N.D.
1955-56	3,994	491.0	.0	816.0	Sep 19	N.D.
1956-57	9,962	659.0	.0	10,574.0	Apr 12	667.0
1957-58	216,335	2,418.0	.0	213,390.0	Apr 05	2,740.0
1958-59	10,152	378.0	.0	9,665.0	Feb 16	444.0
1959-60	2,688	359.0	.0	994.0	Jul 09	N.D.
1960-61	6,006	459.0	.0	889.0	May 16	N.D.
1961-62	74,783	1,847.0	.0	73,031.0	Feb 15	2,160.0
1962-63	1,708	99.0	.0	1,957.0	Feb 09	N.D.
1963-64	1,001	36.0	.0	922.0	Jan 21	N.D.
1964-65	10,093	1,426.0	.0	8,908.0	Jun 05	1,430.0
1965-66	200,376	9,263.0	.0	193,965.0	Dec 29	10,330.0
1966-67	203,232	3,872.0	.0	193,246.0	Dec 06	5,320.0
1967-68	35,015	567.0	.0	32,902.0	May 06	675.0
1968-69	554,905	19,290.0	12.0	554,687.0	Feb 25	29,690.0
1969-70	68,267	1,558.0	.0	66,131.0	Mar 01	1,800.0
1970-71	27,828	496.0	.0	31,319.0	Dec 29	497.0
1971-72	21,193	298.0	.0	15,445.0	Jan 05	302.0
1972-73	1,107,052	840.0	.0	114,349.0	Feb 11	924.0
1973-74	27,471	1,054.0	.0	30,553.0	Jan 08	3,410.0
1974-75	9,838	313.0	.2	7,366.0	Nov 20	389.0
1975-76	2,270	47.0	.2	2,110.0	Sep 30	125.0

N.D. Not determined
R.I. Records incomplete
+ Less than 0.05 Acre Feet or less than 0.05 CFS, but greater than 0

RESERVOIRS – YEARLY RESERVOIR OPERATION SUMMARY

Morris Dam

Season	Inflow Annual (AF)	Inflow		Outflow Annual (AF)	Peak Inflow	
		Max-Day (CFS)	Min-Day (CFS)		Date	Q (CFS)
1976-77						N.D.
1977-78						N.D.
1978-79						N.D.
1979-80						N.D.
1980-81						N.D.
1981-82						N.D.
1982-83						N.D.
1983-84						N.D.
1984-85						N.D.
1985-86						N.D.
1986-87						N.D.
1987-88						N.D.
1988-89						N.D.
1989-90						N.D.
1990-91						N.D.
1991-92						N.D.
1992-93						N.D.
1993-94						N.D.
1994-95	207,136	3,858.0	1.3	201,716.0	Jan 10	3,131.0
1995-96	41,898	454.0	1.3	47,242.0	Feb 20	372.0
1996-97	38,827	313.0	1.5	38,822.0		N.D.
1997-98	213,739	7,805.0	.0	229,947.0	Feb 23	11,892.0
1998-99						N.D.
1999-00	21,977	9,394.0	.0	23,550.0	Aug 30	222.7
2000-01	25183	1202	0	21730	Feb 13	155

N.D.	Not determined
R.I.	Records incomplete
+	Less than 0.05 Acre Feet or less than 0.05 CFS, but greater than 0

RESERVOIRS – YEARLY RESERVOIR OPERATION SUMMARY

Pacoima Dam

Season	Inflow Annual (AF)	Inflow Max-Day (CFS)	Inflow Min-Day (CFS)	Outflow Annual (AF)	Peak Inflow Date	Peak Inflow Q (CFS)
1929-30	1,110	N.D.	N.D.	965.0		N.D.
1930-31	1,082	N.D.	N.D.	886.0		N.D.
1931-32	8,741	N.D.	N.D.	8,443.0		N.D.
1932-33	2,160	101.0	.0	2,119.0		N.D.
1933-34	3,454	N.D.	N.D.	3,493.0	Jan 01	914.0
1934-35	5,569	84.0	.0	5,556.0		N.D.
1935-36	3,098	88.0	.0	3,094.0	Feb 12	248.0
1936-37	15,737	356.0	.0	14,210.0	Feb 14	508.0
1937-38	25,878	2,360.0	.0	26,796.0	Mar 02	8,320.0
1938-39	3,525	86.0	.0	3,080.0	Dec 19	145.0
1939-40	3,209	156.0	.0	3,133.0	Jan 08	928.0
1940-41	25,785	536.0	.0	25,942.0	Mar 04	815.0
1941-42	1,920	48.0	.1	2,032.0	Dec 29	85.0
1942-43	20,698	1,250.0	.1	20,407.0	Jan 23	2,650.0
1943-44	15,004	898.0	.4	15,167.0	Feb 22	1,790.0
1944-45	4,866	206.0	.4	4,911.0	Feb 02	494.0
1945-46	4,600	332.0	.0	2,904.0	Mar 30	564.0
1946-47	4,356	149.0	.0	6,029.0	Nov 20	282.0
1947-48	369	6.4	.1	335.0	Apr 29	12.0
1948-49	723	10.0	.1	740.0	Mar 05	17.0
1949-50	1,063	19.0	.1	1,019.0	Feb 06	26.0
1950-51	142	1.3	.0	69.0	Apr 29	2.4
1951-52	16,794	681.0	.0	4,325.0	Jan 16	1,290.0
1952-53	967	8.5	.0	3,500.0	Dec 01	32.0
1953-54	2,952	107.0	.1	2,941.0	Jan 25	272.0
1954-55	748	18.0	.1	737.0	Apr 30	25.0
1955-56	1,466	90.0	.0	1,252.0	Jan 27	179.0
1956-57	573	9.8	.0	773.0	Jan 13	14.0
1957-58	15,818	714.0	.0	15,808.0	Apr 03	1,180.0
1958-59	783	29.0	.0	708.0	Jan 06	184.0
1959-60	131	.9	.0	271.0	Jan 11	2.2
1960-61	59	6.3	.0	11.0	Nov 12	60.0
1961-62	6,326	584.0	.1	6,279.0	Feb 11	811.0
1962-63	384	8.1	.1	228.0	Feb 10	19.0
1963-64	529	8.3	.1	722.0	Jan 22	56.0
1964-65	1,313	70.0	.1	1,048.0	Apr 09	160.0
1965-66	15,553	647.0	.0	15,214.0	Nov 22	2,010.0
1966-67	23,605	698.0	.4	23,600.0	Dec 06	1,380.0
1967-68	3,843	76.0	.0	3,833.0	Nov 21	107.0

N.D. Not determined
R.I. Records incomplete
+ Less than 0.05 Acre Feet or less than 0.05 CFS, but greater than 0

RESERVOIRS – YEARLY RESERVOIR OPERATION SUMMARY

Pacoima Dam

Season	Inflow Annual (AF)	Inflow		Outflow Annual (AF)	Peak Inflow	
		Max-Day (CFS)	Min-Day (CFS)		Date	Q (CFS)
1968-69	43,398	2,860.0	.0	42,998.0	Feb 25	4,710.0
1969-70	2,717	99.0	.4	2,308.0	Mar 01	276.0
1970-71	4,806	118.0	.5	4,994.0	Nov 29	384.0
1971-72	1,062	36.0	.2	802.0	Dec 26	91.0
1972-73	7,726	696.0	.1	7,383.0	Feb 11	1,640.0
1973-74	4,197	168.0	.2	4,154.0	Jan 08	532.0
1974-75	2,279	48.0	.1	2,526.0	Mar 06	97.0
1975-76	1,622	58.0	.1	1,614.0	Feb 09	102.0
1976-77	1,424	43.0	.3	507.0	Jan 03	213.0
1977-78	R.I.					N.D.
1978-79	R.I.					N.D.
1978-80	R.I.					N.D.
1980-81	2,731	66.0	.0	3,440.0	Jan 29	167.0
1981-82	5,979	226.0	.3	4,867.0	Mar 17	590.0
1982-83	43,336	2,359.0	.5	44,566.0	Mar 01	4,671.0
1983-84	3,521	88.0	.2	1,386.0	Dec 25	153.0
1984-85	2,853	79.0	.0	3,651.0	Dec 20	104.0
1985-86	7,886	279.0	.0	7,015.0	Feb 15	161.0
1986-87	638	7.0	.0	224.0	Jan 04	9.0
1987-88	3,522	52.0	.1	3,441.0	Oct 23	93.0
1988-89	2,398	40.0	.0	2,065.0	Feb 04	72.0
1989-90	784	27.0	.0	817.0	Feb 17	59.0
1990-91	3,520	127.0	.0	3,222.0	Mar 27	140.0
1991-92	N.D.	5,212.0	.0	N.D.	Feb 10	1,180.0
1992-93	40,473	929.0	.1	39,814.0	Jan 13	1,186.0
1993-94	2,465	27.0	.0	3,354.0	Feb 08	46.0
1994-95	23,547	351.0	.0	23,710.0	Jan 10	1,073.0
1995-96	7,655	389.0	.0	7,710.0	Feb 21	532.0
1996-97	6,497	163.0	1.2	5,417.0		N.D.
1997-98	31,461	1,462.0	.1	31,467.0	Feb 23	3,292.0
1998-99						N.D.
1999-00	2,646	70.0	.0	2,675.0	Feb 22	70.2
2000-01	5038	755	0	4176		N.D.

N.D. Not determined
R.I. Records incomplete
+ Less than 0.05 Acre Feet or less than 0.05 CFS, but greater than 0

RESERVOIRS – YEARLY RESERVOIR OPERATION SUMMARY

Puddingstone Dam

Season	Inflow Annual (AF)	Inflow Max-Day (CFS)	Inflow Min-Day (CFS)	Outflow Annual (AF)	Peak Inflow Date	Peak Inflow Q (CFS)
1928-29	114	12.0	.0	151.0		N.D.
1929-30	295	15.0	.0	223.0		N.D.
1930-31	73	9.0	.0	119.0		N.D.
1931-32	1,547	162.0	.0	1,086.0		N.D.
1932-33	314	30.0	.0	906.0		N.D.
1933-34	2,669	596.0	.0	1,809.0		N.D.
1934-35	610	N.D.	N.D.	846.0	Jan 15	205.0
1935-36	703	54.0	.0	969.0	Apr 10	590.0
1936-37	5,732	303.0	.0	2,173.0	Feb 06	1,480.0
1937-38	12,221	2,200.0	.0	7,544.0	Mar 02	5,310.0
1938-39	1,576	101.0	.0	5,305.0		N.D.
1939-40	646	54.0	.0	2,524.0	Jan 07	448.0
1940-41	12,030	377.0	.0	3,308.0	Mar 04	1,080.0
1941-42	475	30.0	.0	4,385.0	Dec 10	409.0
1942-43	10,043	1,130.0	.0	4,836.0	Jan 23	2,300.0
1943-44	3,408	525.0	.0	3,178.0	Feb 22	1,030.0
1944-45	1,615	139.0	.0	2,376.0	Nov 11	484.0
1945-46	1,591	275.0	.0	6,009.0	Dec 23	929.0
1946-47	1,414	96.0	.0	788.0	Nov 13	445.0
1947-48	324	31.0	.0	362.0	Dec 05	195.0
1948-49	336A	21.0	.0	201.0	Mar 13	240.0
1949-50	493	55.0	.0	140.0	Feb 06	178.0
1950-51	182	15.0	.0	145.0	Jan 29	162.0
1951-52	4,673	353.0	.0	1,857.0	Jan 16	952.0
1952-53	928	32.0	.0	1,140.0	Dec 01	358.0
1953-54	31282A	244.0	.0	31,609.0	Jan 25	600.0
1954-55	26065A	255.0	.0	23,287.0	Nov 11	338.0
1955-56	57309A	458.0	.0	50,771.0	Jan 26	1,360.0
1956-57	50583A	216.0	.0	53,781.0	Jan 13	262.0
1957-58	6,670	302.0	.0	1,976.0	Apr 03	690.0
1958-59	394	68.0	.0	72.0	Jan 06	871.0
1959-60	837	80.0	.0	40.0	Jan 12	148.0
1960-61	10900A	198.0	.0	9,416.0	Nov 06	179.0
1961-62	4,463	173.0	.0	33.0	Dec 02	963.0
1962-63	927	139.0	.0	464.0	Feb 10	325.0
1963-64	594	43.0	.0	.0	Jan 22	242.0
1964-65	2,675	153.0	.0	7,401.0	Apr 09	1,770.0
1965-66	10,456	444.0	.0	3,066.0	Nov 22	1,590.0
1966-67	11,508	1,090.0	.0	9,988.0	Dec 06	2,440.0

N.D. Not determined
R.I. Records incomplete
+ Less than 0.05 Acre Feet or less than 0.05 CFS, but greater than 0

RESERVOIRS – YEARLY RESERVOIR OPERATION SUMMARY

Puddingstone Dam

Season	Inflow Annual (AF)	Inflow Max-Day (CFS)	Inflow Min-Day (CFS)	Outflow Annual (AF)	Peak Inflow Date	Peak Inflow Q (CFS)
1967-68	15,811	174.0	.0	14,275.0	Mar 08	760.0
1968-69	36,802	2,830.0	.0	35,754.0	Jan 25	4,340.0
1969-70	1,650	163.0	.2	+	Mar 01	507.0
1970-71	1,494	149.0	.1	4,094.0	Dec 18	365.0
1971-72	1,007	186.0	+	+	Dec 24	538.0
1972-73	4,038	341.0	.1	+	Feb 11	604.0
1973-74	2,409	1,070.0	.1	1,069.0	Jan 07	660.0
1974-75	1,832	153.0	.0	1,832.0	Dec 04	769.0
1975-76	2,644	180.0	.1	.0	Sep 10	493.0
1976-77	2,655	138.0	.1	197.0	Jan 03	812.0
1977-78	R.I					N.D.
1978-79	R.I					N.D.
1979-80	R.I					N.D.
1980-81	2,115	154.0	.0	515.0	Jan 29	1,132.0
1981-82	4,731	350.0	.0	2,598.0	Mar 18	810.0
1982-83	15,956	764.0	.0	15,238.0	Mar 01	2,570.0
1983-84	2,791	192.0	.0	2,048.0	Dec 25	1,159.0
1984-85	2,688	143.0	.0	873.0	Dec 18	236.0
1985-86	4,888	241.0	.0	3,150.0	Mar 16	1,058.0
1986-87	1,989	291.0	.0	1,118.0	Jan 04	854.0
1987-88	4,010	143.0	.0	2,373.0	Jan 17	422.0
1988-89	3,539	117.0	.0	2,045.0	Feb 04	211.0
1989-90	2,545	235.0	.0	977.0	Feb 17	683.0
1990-91	4,461	371.0	.0	2,932.0	Mar 01	1,270.0
1991-92	6,781	407.0	.0	5,333.0	Feb 12	959.0
1992-93	30,324	909.0	.0	28,674.0	Jan 18	1,992.0
1993-94	2,884	78.0	.1	1,322.0	Feb 07	212.0
1994-95	11,261	537.0	.1	9,927.0	Jan 10	1,411.0
1995-96	4,587	438.0	.0	3,275.0	Feb 20	1,460.0
1996-97	5,421	200.0	.0	4,382.0		N.D.
1997-98	15,722	626.0	.1	13,941.0	Feb 23	1,660.0
1998-99						N.D.
1999-00	1,283	3,010.0	.0	1,534.0	Feb 24	174.4
2000-01	N.D.				Jan 11	597.8

N.D. Not determined
R.I. Records incomplete
+ Less than 0.05 Acre Feet or less than 0.05 CFS, but greater than 0

RESERVOIRS – YEARLY RESERVOIR OPERATION SUMMARY

Puddingstone Diversion

Season	Inflow Annual (AF)	Inflow Max-Day (CFS)	Inflow Min-Day (CFS)	Outflow Annual (AF)	Peak Inflow Date	Peak Inflow Q (CFS)
1935-36	304	48.0	.0	304.0	Apr 10	85.0
1936-37	5,019	104.0	.0	4,646.0		N.D.
1937-38	11,697	1,640.0	.0	11,506.0	Mar 02	5,760.0
1938-39	1,288	28.0	.0	1,293.0	Jan 10	23.0
1939-40	350	26.0	.0	155.0	Jan 08	33.0
1940-41	7,213	133.0	.0	6,776.0	Mar 14	155.0
1941-42	341	13.0	.0	203.0	Dec 12	24.0
1942-43	8,593	970.0	.0	7,939.0	Jan 23	2,040.0
1943-44	3,406	357.0	.0	3,010.0	Feb 22	724.0
1944-45	1,719	64.0	.0	1,294.0	Feb 02	88.0
1945-46	970	159.0	.0	773.0	Dec 23	234.0
1946-47	1,400	55.0	.0	1,109.0	Dec 26	58.0
1947-48	0	.0	.0	.0		N.D.
1948-49	0	.0	.0	.0		N.D.
1949-50	0	.0	.0	.0		N.D.
1950-51	0	.0	.0	.0		N.D.
1951-52	3,366	158.0	.0	2,910.0	Jan 16	201.0
1952-53	0	.0	.0	.0		N.D.
1953-54	628	57.0	.0	429.0	Feb 14	82.0
1954-55	0	.0	.0	.0		N.D.
1955-56	196	34.0	.0	128.0	Jan 26	93.0
1956-57	0	.0	.0	.0		N.D.
1957-58	5,938	227.0	.0	5,172.0	Apr 03	284.0
1958-59	89	14.0	.0	49.0	Feb 18	18.0
1959-60	0	.0	.0	.0		N.D.
1960-61	146	11.0	.0	64.0	Nov 26	137.0
1961-62	3,277	152.0	.0	3,106.0	Nov 20	2,110.0
1962-63	827	95.0	.0	515.0	Feb 09	640.0
1963-64	112	19.0	.0	67.0	Jan 22	55.0
1964-65	873	69.0	.0	538.0	Apr 09	239.0
1965-66	6,471	320.0	.0	5,864.0	Nov 22	864.0
1966-67	13,656	958.0	.0	12,140.0	Dec 06	2,230.0
1967-68	2,744	62.0	.0	2,180.0	Nov 30	125.0
1968-69	35,110	2,610.0	.0	34,200.0	Jan 25	5,600.0
1969-70	4,005	27.0	.0	2,788.0	Mar 04	62.0
1970-71	2,181	35.0	.0	1,524.0	Dec 21	61.0
1971-72	764	15.0	.0	488.0	Dec 24	56.0
1972-73	3,746	163.0	.0	3,321.0	Feb 11	219.0
1973-74	1,660	75.0	.0	1,371.0	Jan 07	110.0

N.D. Not determined
R.I. Records incomplete
+ Less than 0.05 Acre Feet or less than 0.05 CFS, but greater than 0

RESERVOIRS – YEARLY RESERVOIR OPERATION SUMMARY

Puddingstone Diversion

Season	Inflow Annual (AF)	Inflow		Outflow Annual (AF)	Peak Inflow	
		Max-Day (CFS)	Min-Day (CFS)		Date	Q (CFS)
1974-75	969	15.0	.0	786.0	Mar 06	46.0
1975-76	423	9.1	.0	333.0	Mar 01	16.0
1976-77	844	29.0	.0	578.0	Jan 03	57.0
1977-78	R.I.					N.D.
1978-79	R.I.					N.D.
1979-80	R.I.					N.D.
1980-81	2,025	21.0	.0	1,877.0	Jan 29	44.0
1981-82	2,856	122.0	.0	2,831.0	Mar 18	260.0
1982-83	18,257	705.0	.0	18,272.0	Mar 01	1,867.0
1983-84	3,267	54.0	.0	3,259.0	Dec 25	84.0
1984-85	1,353	37.0	.0	1,294.0	Dec 18	40.0
1985-86	1,324	99.0	.0	1,201.0	Mar 16	104.0
1986-87	686	18.0	.0	702.0	Jan 04	49.0
1987-88	927	38.0	.0	823.0	Jan 17	214.0
1988-89	1,060	76.0	.0	927.0	Feb 04	111.0
1989-90	228	48.0	.0	193.0	Feb 17	78.0
1990-91	2,079	54.0	.0	2,024.0	Feb 28	195.0
1991-92	3,289	163.0	.0	3,277.0	Feb 12	264.0
1992-93	25,714	698.0	.0	25,686.0	Jan 18	757.0
1993-94	1,475	14.0	.0	1,488.0	Feb 07	23.0
1994-95	11,349	211.0	.0	11,349.0	Jan 10	252.0
1995-96	3,045	71.0	.0	3,044.0	Feb 20	161.0
1996-97	2,468	84.0	.0	2,440.0		N.D.
1997-98	13,037	514.0	.0	12,996.0	Feb 24	652.0
1998-99						N.D.
1999-00	746	46.0	.0	769.0	Jun 23	55.1
2000-01						N.D.

N.D. Not determined
R.I. Records incomplete
+ Less than 0.05 Acre Feet or less than 0.05 CFS, but greater than 0

RESERVOIRS – YEARLY RESERVOIR OPERATION SUMMARY

San Dimas Dam

Season	Inflow Annual (AF)	Inflow Max-Day (CFS)	Inflow Min-Day (CFS)	Outflow Annual (AF)	Peak Inflow Date	Peak Inflow Q (CFS)
1928-29	N.D.	N.D.	.0	N.D.		N.D.
1929-30	591	28.0	.0	573.0		N.D.
1930-31	585	23.0	.0	466.0		N.D.
1931-32	2,502	162.0	.0	2,496.0		N.D.
1932-33	652	50.0	.0	648.0		N.D.
1933-34	1,351	229.0	.0	1,357.0	Jan 01	422.0
1934-35	1,753	60.0	.0	1,682.0	Apr 08	145.0
1935-36	1,094	35.0	.0	1,136.0	Feb 11	155.0
1936-37	6,316	154.0	.0	6,126.0	Feb 06	296.0
1937-38	12,492	1,600.0	.4	12,494.0	Mar 02	4,920.0
1938-39	2,165	43.0	.2	2,024.0	Jan 05	80.0
1939-40	1,532	60.0	.0	1,600.0	Jan 08	302.0
1940-41	9,645	131.0	.1	9,240.0	Mar 04	235.0
1941-42	1,603	16.0	.2	1,855.0	Dec 10	29.0
1942-43	9,271	573.0	.5	9,095.0	Jan 23	1,700.0
1943-44	5,348	398.0	.1	5,423.0	Feb 22	785.0
1944-45	3,747	97.0	.9	3,811.0	Nov 11	375.0
1945-46	2,560	149.0	.1	2,368.0	Dec 23	519.0
1946-47	2,705	100.0	.1	2,982.0	Nov 20	340.0
1947-48	720	10.0	.0	706.0	Feb 05	15.0
1948-49	728	11.0	.1	694.0	Jan 20	19.0
1949-50	734	25.0	.1	750.0	Dec 18	65.0
1950-51	300	5.3	.1	301.0	Apr 29	16.0
1951-52	4,864	208.0	.1	4,593.0	Jan 16	453.0
1952-53	822	9.8	.1	1,092.0	Dec 01	25.0
1953-54	1,514	97.0	.1	1,501.0	Jan 25	327.0
1954-55	561	11.0	.1	526.0	Jan 18	27.0
1955-56	736	98.0	.1	767.0	Jan 26	362.0
1956-57	452	12.0	.1	433.0	Jan 13	41.0
1957-58	6,786	299.0	.0	6,503.0	Apr 03	753.0
1958-59	931	37.0	.1	1,239.0	Feb 16	189.0
1959-60	408	6.7	.1	455.0	Feb 08	11.0
1960-61	468	31.0	.1	250.0	Nov 05	397.0
1961-62	3,206	224.0	+	2,664.0	Nov 20	2,520.0
1962-63	1,001	81.0	.1	1,108.0	Feb 09	440.0
1963-64	680	20.0	.1	711.0	Jan 22	121.0
1964-65	1,118	53.0	.0	1,175.0	Apr 09	232.0
1965-66	6,494	305.0	.2	6,326.0	Dec 29	1,010.0
1966-67	12,352	674.0	.0	11,598.0	Dec 06	1,720.0

N.D. Not determined
R.I. Records incomplete
\+ Less than 0.05 Acre Feet or less than 0.05 CFS, but greater than 0

RESERVOIRS – YEARLY RESERVOIR OPERATION SUMMARY

San Dimas Dam

Season	Inflow Annual (AF)	Inflow Max-Day (CFS)	Inflow Min-Day (CFS)	Outflow Annual (AF)	Peak Inflow Date	Peak Inflow Q (CFS)
1967-68	3,148	80.0	.1	3,058.0	Nov 19	414.0
1968-69	28,645	1,710.0	.7	28,808.0	Jan 25	3,620.0
1969-70	4,314	71.0	.7	4,736.0	Mar 01	114.0
1970-71	2,465	70.0	.5	2,125.0	Nov 29	127.0
1971-72	1,040	33.0	.2	1,217.0	Dec 24	77.0
1972-73	4,252	346.0	.7	4,000.0	Feb 11	685.0
1973-74	2,447	121.0	.3	2,389.0	Jan 07	185.0
1974-75	1,487	28.0	.1	1,566.0	Mar 06	67.0
1975-76	1,002	52.0	.1	926.0	Sep 10	443.0
1976-77	1,094	41.0	.0	1,146.0	Jan 03	260.0
1977-78	R.I.					
1978-79	R.I.					
1979-80	19,951	673.0	2.3	18,715.0	Feb 16	2,549.0
1980-81	3,016	37.0	.8	3,216.0	Jan 29	147.0
1981-82	3,848	161.0	.2	3,700.0	Mar 17	295.0
1982-83	17,632	527.0	.0	17,381.0	Mar 01	1,559.0
1983-84	3,816	55.0	.0	4,330.0	Dec 25	115.0
1984-85	2,554	45.0	.6	2,560.0	Dec 19	67.0
1985-86	2,401	55.0	.0	2,415.0	Mar 16	89.0
1986-87	N.D.	10.0	.1	N.D.	Jan 05	13.0
1987-88	1,821	54.0	.0	1,216.0	Jan 17	157.0
1988-89	1,122	35.0	.0	1,225.0	Feb 04	96.0
1989-90	731	28.0	.0	462.0	Feb 17	93.0
1990-91	1,967	112.0	.0	2,361.0	Mar 27	236.0
1991-92	4,037	143.0	.0	3,938.0	Feb 12	403.0
1992-93	24,941	651.0	.0	24,446.0	Jan 14	945.0
1993-94	2,295	17.0	.2	2,424.0	Feb 07	31.0
1994-95	10,102	177.0	.8	9,801.0	Jan 10	363.0
1995-96	4,036	149.0	.2	4,097.0	Feb 20	418.0
1996-97	13,175	81.0	.0	2,988.0		N.D.
1997-98	12,122	396.0	.3	11,948.0	Feb 23	1,194.0
1998-99						N.D.
1999-00	1,243	64.0	.0	1,297.0	Feb 18	63.5
2000-01	1695	61	0	1524	Jan 11	473.3

N.D. Not determined
R.I. Records incomplete
+ Less than 0.05 Acre Feet or less than 0.05 CFS, but greater than 0

RESERVOIRS – YEARLY RESERVOIR OPERATION SUMMARY

San Gabriel Dam

Season	Inflow Annual (AF)	Inflow		Outflow Annual (AF)	Peak Inflow	
		Max-Day (CFS)	Min-Day (CFS)		Date	Q (CFS)
1937-38	339,155	30,720.0	37.0	332,893.0	Mar 02	89,320.0
1938-39	67,231	1,330.0	23.0	61,655.0	Dec 19	2,780.0
1939-40	58,554	757.0	18.0	63,386.0	Jan 08	2,270.0
1940-41	306,801	3,940.0	20.0	305,515.0	Feb 20	5,780.0
1941-42	50,285	297.0	20.0	49,759.0	Dec 29	468.0
1942-43	271,286	17,180.0	20.0	267,085.0	Jan 23	46,000.0
1943-44	184,923	5,710.0	43.0	184,622.0	Feb 22	9,860.0
1944-45	91,961	1,300.0	28.0	90,131.0	Nov 11	6,440.0
1945-46	99,531	2,980.0	28.0	89,502.0	Dec 21	5,760.0
1946-47	107,688	3,340.0	18.0	104,088.0	Dec 26	6,520.0
1947-48	29,259	257.0	9.9	37,794.0	Apr 29	506.0
1948-49	24,728	94.0	11.0	21,546.0	Jan 20	120.0
1949-50	27,797	266.0	9.5	27,736.0	Dec 19	448.0
1950-51	10,169	54.0	3.0	13,002.0	Jan 11	174.0
1951-52	159,048	3,340.0	3.9	118,918.0	Jan 16	6,130.0
1952-53	41,270	375.0	7.5	77,961.0	Dec 01	544.0
1953-54	60,515	1,280.0	8.3	56,517.0	Jan 25	2,940.0
1954-55	39,159	171.0	18.0	37,304.0	Apr 30	313.0
1955-56	35,215	950.0	14.0	38,127.0	Jan 26	2,250.0
1956-57	37,210	1,090.0	15.0	35,069.0	Jan 13	2,850.0
1957-58	230,745	4,270.0	21.0	229,610.0	Apr 03	6,900.0
1958-59	43,762	1,030.0	14.0	43,100.0	Jan 06	3,080.0
1959-60	19,474	112.0	5.0	19,258.0	Apr 28	168.0
1960-61	12,041	122.0	2.2	12,698.0	Nov 05	634.0
1961-62	116,890	6,350.0	3.4	112,380.0	Feb 11	13,960.0
1962-63	25,930	512.0	6.2	24,587.0	Feb 09	2,440.0
1963-64	24,009	287.0	5.2	22,601.0	Apr 01	504.0
1964-65	36,281	396.0	5.5	34,427.0	Apr 09	1,070.0
1965-66	220,689	9,030.0	12.0	217,503.0	Dec 29	27,180.0
1966-67	224,903	6,700.0	30.0	224,538.0	Dec 06	12,420.0
1967-68	66,761	697.0	26.0	68,771.0	Nov 19	1,620.0
1968-69	527,883	28,020.0	24.0	524,874.0	Jan 25	44,400.0
1969-70	66,842	1,250.0	26.0	66,688.0	Feb 28	2,550.0
1970-71	60,375	2,120.0	29.0	55,358.0	Nov 29	6,400.0
1971-72	34,908	975.0	14.0	38,192.0	Dec 25	1,390.0
1972-73	124,722	5,075.0	14.1	124,333.0	Feb 11	17,430.0
1973-74	72,959	1,140.0	32.0	67,194.0	Jan 07	1,820.0
1974-75	47,681	423.0	27.0	46,194.0	Mar 06	880.0
1975-76	38,598	978.0	18.0	33,781.0	Sep 11	1,630.0

N.D. Not determined
R.I. Records incomplete
+ Less than 0.05 Acre Feet or less than 0.05 CFS, but greater than 0

RESERVOIRS – YEARLY RESERVOIR OPERATION SUMMARY

San Gabriel Dam

Season	Inflow Annual (AF)	Inflow		Outflow Annual (AF)	Peak Inflow	
		Max-Day (CFS)	Min-Day (CFS)		Date	Q (CFS)
1976-77	36,322	407.0	15.0	34,846.0	Jan 03	1,137.0
1977-78	486,296	13,437.0	14.9	483,712.0	Mar 04	31,730.0
1978-79	158,043	1,647.0	42.9	163,511.0	Mar 28	1,965.0
1979-80	346,155	11,476.0	42.5	344,454.0	Feb 16	24,540.0
1980-81	42,882	281.0	15.0	40,116.0	Jan 29	784.0
1981-82	95,225	1,591.0	19.0	79,833.0	Mar 17	2,869.0
1982-83	404,332	14,585.0	33.0	402,734.0	Mar 01	17,080.0
1983-84	61,069	983.0	13.0	75,284.0	Dec 25	1,568.0
1984-85	46,633	617.0	8.5	46,101.0	Dec 19	742.0
1985-86	103,558	1,252.0	14.0	100,926.0	Jan 30	1,911.0
1986-87	22,847	149.0	3.0	22,919.0	Jan 05	259.0
1987-88	66,101	574.0	3.8	49,337.0	Feb 29	814.0
1988-89	33,435	273.0	4.0	47,683.0	Dec 16	496.0
1989-90	18,979	248.0	2.3	17,008.0	Feb 18	388.0
1990-91	61,479	1,575.0	3.3	39,454.0	Mar 01	4,294.0
1991-92	171,617	5,796.0	.0	193,158.0	Feb 12	11,426.0
1992-93	445,072	10,181.0	.0	429,615.0	Feb 19	12,934.0
1993-94	44,269	312.0	.6	50,441.0	Feb 08	433.0
1994-95	248,268	3,811.0	12.8	242,886.0	Jan 10	6,996.0
1995-96	72,722	2,995.0	2.0	70,533.0	Feb 21	3,822.0
1996-97	66,304	947.0	5.2	64,946.0		N.D.
1997-98	275,500	9,169.0	8.2	237,419.0	Feb 23	22,512.0
1998-99						N.D.
1999-00	43,634	1,626.0	3.0	43,713.0	Feb 21	947.5
2000-01	58142	629	0	56650	Feb 13	1362.7

N.D. Not determined
R.I. Records incomplete
+ Less than 0.05 Acre Feet or less than 0.05 CFS, but greater than 0

RESERVOIRS – YEARLY RESERVOIR OPERATION SUMMARY

Santa Anita Dam

Season	Inflow Annual (AF)	Inflow Max-Day (CFS)	Inflow Min-Day (CFS)	Outflow Annual (AF)	Peak Inflow Date	Peak Inflow Q (CFS)
1926-27	1,208	13.0	.4	1,030.0		N.D.
1927-28	1,009	22.0	.1	1,162.0		N.D.
1928-29	1,214	30.0	.0	1,256.0		N.D.
1929-30	1,276	25.0	.1	964.0		N.D.
1930-31	989	34.0	.0	1,155.0		N.D.
1931-32	4,010	236.0	.1	3,883.0		N.D.
1932-33	2,190	152.0	.0	2,022.0	Jan 19	390.0
1933-34	2,603	322.0	.0	2,622.0	Jan 01	800.0
1934-35	3,693	92.0	.1	3,585.0	Apr 08	449.0
1935-36	2,480	84.0	.0	2,535.0	Feb 12	228.0
1936-37	8,798	192.0	.0	8,616.0	Feb 06	313.0
1937-38	16,594	1,780.0	1.3	16,689.0	Mar 02	5,140.0
1938-39	2,726	74.0	.4	2,461.0	Dec 19	159.0
1939-40	2,743	62.0	.4	2,664.0	Jan 08	378.0
1940-41	15,225	239.0	.4	15,235.0	Mar 04	300.0
1941-42	2,070	25.0	.6	2,140.0	Dec 29	53.0
1942-43	19,371	1,110.0	.6	19,440.0	Jan 23	3,100.0
1943-44	7,463	514.0	1.3	7,294.0	Feb 22	813.0
1944-45	4,147	101.0	1.1	4,133.0	Nov 11	303.0
1945-46	3,426	164.0	.8	3,360.0	Dec 23	492.0
1946-47	4,489	122.0	.7	4,462.0	Nov 20	382.0
1947-48	1,075	14.0	.3	1,243.0	Apr 28	41.0
1948-49	1,031	17.0	.2	983.0	Jan 20	32.0
1949-50	1,357	30.0	.2	1,311.0	Dec 18	115.0
1950-51	460	4.5	.1	497.0	Jan 11	10.0
1951-52	8,408	351.0	.1	8,292.0	Jan 16	837.0
1952-53	1,562	20.0	.5	1,729.0	Dec 01	153.0
1953-54	3,302	201.0	.4	3,412.0	Jan 24	1,240.0
1954-55	1,432	18.0	.3	1,437.0	Nov 11	173.0
1955-56	2,218	175.0	.3	2,196.0	Jan 26	569.0
1956-57	1,535	36.0	.5	1,431.0	Feb 23	122.0
1957-58	11,696	298.0	.7	11,715.0	Apr 03	618.0
1958-59	2,183	66.0	.6	2,033.0	Jan 06	622.0
1959-60	954	6.5	.1	1,152.0	Feb 01	16.0
1960-61	527	12.0	.1	407.0	Jan 26	65.0
1961-62	6,328	682.0	.1	6,242.0	Feb 11	1,460.0
1962-63	1,628	56.0	.7	1,848.0	Feb 09	368.0
1963-64	1,219	32.0	+	1,144.0	Apr 01	53.0
1964-65	2,039	50.0	.0	1,988.0	Apr 09	130.0

N.D. Not determined
R.I. Records incomplete
+ Less than 0.05 Acre Feet or less than 0.05 CFS, but greater than 0

RESERVOIRS – YEARLY RESERVOIR OPERATION SUMMARY

Santa Anita Dam

Season	Inflow Annual (AF)	Inflow Max-Day (CFS)	Inflow Min-Day (CFS)	Outflow Annual (AF)	Peak Inflow Date	Peak Inflow Q (CFS)
1965-66	13,102	600.0	.4	12,933.0	Dec 29	1,920.0
1966-67	16,245	645.0	1.5	16,261.0	Dec 06	1,520.0
1967-68	3,376	56.0	.1	3,579.0	Nov 19	165.0
1968-69	38,734	2,292.0	.3	38,369.0	Jan 25	5,500.0
1969-70	2,859	85.0	1.0	2,859.0	Feb 28	208.0
1970-71	3,211	184.0	1.0	3,075.0	Nov 29	674.0
1971-72	1,316	36.0	.5	1,249.0	Dec 24	99.0
1972-73	6,414	482.0	.4	6,258.0	Feb 11	1,350.0
1973-74	4,660	174.0	1.2	4,546.0	Jan 07	280.0
1974-75	2,347	36.0	.1	2,647.0	Mar 06	54.0
1975-76	1,580	52.0	.2	1,469.0	Mar 01	101.0
1976-77	1,320	35.0	1.0	1,206.0	Jan 03	200.0
1977-78	R.I.					
1978-79	R.I.					
1979-80	R.I.					
1980-81	2,221	27.0	.6	2,210.0	Jan 29	147.0
1981-82	3,714	127.0	.6	3,652.0	Mar 17	213.0
1982-83	21,246	882.0	.0	21,325.0	Mar 02	1,197.0
1983-84	3,603	57.0	.3	3,586.0	Dec 25	142.0
1984-85	2,363	48.0	.0	2,272.0	Dec 19	102.0
1985-86	4,735	77.0	.4	4,612.0	Jan 30	89.0
1986-87	1,041	7.6	.0	1,174.0	Jan 05	11.0
1987-88	2,490	37.0	.1	2,488.0	Jan 17	87.0
1988-89	1,729	52.0	.0	1,599.0	Feb 04	119.0
1989-90	737	30.0	.0	740.0	Feb 17	117.0
1990-91	2,393	92.0	.0	2,323.0	Mar 01	417.0
1991-92	9,339	390.0	.2	9,292.0	Feb 11	863.0
1992-93	23,546	558.0	.2	23,581.0	Jan 07	909.0
1993-94	1,475	15.0	.0	1,565.0	Mar 24	19.0
1994-95	12,439	242.0	.1	12,281.0	Jan 10	587.0
1995-96	4,494	274.0	.1	4,535.0	Feb 21	481.0
1996-97	4,970	93.0	.1	4,934.0		N.D.
1997-98	13,694	787.0	.0	13,655.0	Feb 23	2,449.0
1998-99						N.D.
1999-00	1,872	35.0	.0	1,970.0	Feb 24	54.0
2000-01	2712	233	0	2561	Feb 13	95.7

N.D. Not determined
R.I. Records incomplete
+ Less than 0.05 Acre Feet or less than 0.05 CFS, but greater than 0

RESERVOIRS – YEARLY RESERVOIR OPERATION SUMMARY

Sawpit Dam

Season	Inflow Annual (AF)	Inflow		Outflow Annual (AF)	Peak Inflow	
		Max-Day (CFS)	Min-Day (CFS)		Date	Q (CFS)
1927-28	26	N.D.	.0	39.0		N.D.
1928-29	96	5.3	.0	108.0		N.D.
1929-30	219	7.9	.0	208.0		N.D.
1930-31	97	3.9	.0	68.0		N.D.
1931-32	710	56.0	.0	726.0	Feb 09	76.0
1932-33	184	8.6	.0	185.0		N.D.
1933-34	468	106.0	.0	457.0	Jan 01	240.0
1934-35	548	36.0	.0	540.0	Apr 08	168.0
1935-36	574	22.0	.0	574.0	Feb 11	72.0
1936-37	1,434	36.0	.0	1,401.0		N.D.
1937-38	2,909	384.0	.0	2,868.0	Mar 02	1,070.0
1938-39	232	17.0	.0	170.0		N.D.
1939-40	264	11.0	.0	308.0	Jan 08	39.0
1940-41	2,180	63.0	.0	2,195.0	Mar 04	109.0
1941-42	107	3.7	.0	39.0	Dec 29	4.8
1942-43	2,966	162.0	.0	2,950.0	Jan 23	520.0
1943-44	747	73.0	.0	743.0	Feb 22	138.0
1944-45	316	16.0	.0	319.0	Nov 11	59.0
1945-46	254	24.0	.0	250.0	Dec 23	85.0
1946-47	362	23.0	.0	361.0	Nov 20	77.0
1947-48	23	.3	.0	5.1	Apr 28	2.9
1948-49	42	.4	.0	32.0	Mar 10	.9
1949-50	86	21.0	.0	77.0	Dec 18	7.9
1950-51	32	.8	.0	32.0	Jan 11	2.4
1951-52	1,112	60.0	.0	1,092.0	Jan 16	226.0
1952-53	88	3.2	.0	82.0	Dec 01	34.0
1953-54	274	14.0	.0	263.0	Jan 24	105.0
1954-55	142	4.3	.0	139.0	Nov 11	73.0
1955-56	204	37.0	+	210.0	Jan 26	48.0
1956-57	80	.8	.0	65.0	Feb 23	8.1
1957-58	1,371	46.0	.0	1,368.0	Apr 03	112.0
1958-59	815	36.0	.1	804.0	Jan 06	1,600.0
1959-60	201	4.8	+	163.0	Apr 27	70.0
1960-61	111	1.7	.0	144.0	Nov 05	12.0
1961-62	1,269	122.0	.1	1,236.0	Feb 11	282.0
1962-63	256	12.0	.1	256.0	Feb 09	77.0
1963-64	271	3.7	.0	294.0	Jan 21	10.0
1964-65	405	9.7	.1	355.0	Apr 09	27.0
1965-66	2,224	87.0	.0	2,218.0	Dec 29	423.0

N.D. Not determined
R.I. Records incomplete
\+ Less than 0.05 Acre Feet or less than 0.05 CFS, but greater than 0

RESERVOIRS – YEARLY RESERVOIR OPERATION SUMMARY

Sawpit Dam

Season	Inflow Annual (AF)	Inflow		Outflow Annual (AF)	Peak Inflow	
		Max-Day (CFS)	Min-Day (CFS)		Date	Q (CFS)
1966-67	3,985	157.0	1.1	3,980.0	Dec 06	307.0
1967-68	1,510	12.0	.8	1,510.0	Nov 19	32.0
1968-69	7,555	635.0	.9	9,498.0	Jan 25	1,060.0
1969-70	1,496	36.0	.5	1,407.0	Feb 28	187.0
1970-71	733	21.0	.4	733.0	Nov 29	70.0
1971-72	521	5.6	.3	521.0	Dec 24	16.0
1972-73	1,449	94.0	.3	1,538.0	Feb 11	350.0
1973-74	1,350	57.0	.1	1,270.0	Jan 07	109.0
1974-75	921	5.9	.5	921.0	Mar 06	15.0
1975-76	646	6.4	.1	646.0	Mar 01	22.0
1976-77	603	7.2	1.0	603.0	Oct 22	74.0
1977-78	4,642	116.1	1.2	4,716.0	Feb 10	250.0
1978-79	2,139	10.0	1.3	2,070.0	Mar 27	19.4
1979-80	5,285	131.2	1.2	5,296.0	Feb 16	404.0
1980-81	1,045	7.2	.4	1,045.0	Jan 29	30.0
1981-82	1,244	39.0	.0	1,307.0	Mar 17	48.0
1982-83	4,587	142.0	.0	4,490.0	Mar 02	300.0
1983-84	1,268	9.3	.0	1,268.0	Dec 25	26.0
1984-85	929	6.7	.5	928.0	Dec 19	25.0
1985-86	1,204	10.0	.0	1,203.0	Mar 16	16.0
1986-87	N.D.	4.2	.0	N.D.	Jan 06	1.5
1987-88	975	7.3	.0	975.0	Mar 01	5.0
1988-89	751	6.7	.0	751.0	Dec 16	11.0
1989-90	534	6.3	.0	527.0	Feb 17	16.0
1990-91	1,113	34.0	.0	1,113.0	Mar 01	77.0
1991-92	1,910	41.0	.4	1,910.0	Feb 12	123.0
1992-93	5,564	67.0	.4	5,563.0	Jan 07	202.0
1993-94	1,555	4.1	.5	1,555.0	Feb 08	6.8
1994-95	35,373	77.0	.5	3,572.0	Jan 10	136.0
1995-96	2,381	38.0	1.4	2,382.0	Feb 21	49.0
1996-97	1,952	11.0	1.5	1,952.0		N.D.
1997-98	3,045	137.0	1.7	3,045.0	Feb 23	332.0
1998-99						N.D.
1999-00	1,569	48.0	1.0	1,553.0	Nov 23	3.7
2000-01						N.D.

N.D. Not determined
R.I. Records incomplete
+ Less than 0.05 Acre Feet or less than 0.05 CFS, but greater than 0

RESERVOIRS – YEARLY RESERVOIR OPERATION SUMMARY

Thompson Creek Dam

Season	Inflow Annual (AF)	Inflow Max-Day (CFS)	Inflow Min-Day (CFS)	Outflow Annual (AF)	Peak Inflow Date	Peak Inflow Q (CFS)
1931-32	81	12.0	.0	81.0	Feb 09	91.0
1932-33	0	.0	.0	.0		N.D.
1933-34	N.D.	N.D.	N.D.	.0		N.D.
1934-35	1	N.D.	N.D.	.0		N.D.
1935-36	1	N.D.	N.D.	.0		N.D.
1936-37	274	24.0	.0	.0		N.D.
1937-38	1,099	259.0	.0	1,096.0	Mar 02	580.0
1938-39	21	.6	.0	.0	Jan 30	1.1
1939-40	49	4.5	.0	.0	Jan 07	26.0
1940-41	640	46.0	.0	2.8	Mar 04	97.0
1941-42	0	+	.0	.0	Dec 10	.5
1942-43	767	121.0	.0	334.0	Jan 23	270.0
1943-44	286	56.0	.0	.0	Feb 22	111.0
1944-45	149	18.0	.0	.0	Nov 12	132.0
1945-46	148	25.0	.0	.0	Dec 23	120.0
1946-47	88	16.0	.0	.0	Nov 20	47.0
1947-48	0	.0	.0	.0		N.D.
1948-49	0	.0	.0	.0		N.D.
1949-50	6	2.0	.0	.0	Dec 19	4.5
1950-51	0	.0	.0	.0		N.D.
1951-52	314	30.0	.0	34.0	Jan 16	70.0
1952-53	12	1.3	.0	.0	Dec 01	8.2
1953-54	194	19.0	.0	.0	Jan 25	172.0
1954-55	4	1.0	.0	.0	Jan 18	1.4
1955-56	58	25.0	.0	.0	Jan 26	117.0
1956-57	4	2.0	.0	.0	Jan 13	5.8
1957-58	389	34.0	.0	219.0	Apr 03	67.0
1958-59	6	1.0	.0	.0	Feb 16	4.7
1959-60	2	.3	.0	.0	Apr 28	5.4
1960-61	5	1.0	.0	.0	Nov 12	3.9
1961-62	101	9.3	.0	.0	Nov 20	190.0
1962-63	88	26.0	.0	17.0	Feb 09	145.0
1963-64	23	4.2	.0	.0	Mar 22	20.0
1964-65	26	9.9	.0	.0	Apr 09	55.0
1965-66	258	34.0	.0	.0	Nov 23	140.0
1966-67	842	200.0	.0	305.0	Dec 06	408.0
1967-68	167	6.8	.0	.0	Nov 19	18.0
1968-69	2,556	279.0	.0	2,061.0	Jan 25	574.0
1969-70	54	4.8	.0	1.6	Mar 01	13.0

N.D. Not determined
R.I. Records incomplete
\+ Less than 0.05 Acre Feet or less than 0.05 CFS, but greater than 0

RESERVOIRS – YEARLY RESERVOIR OPERATION SUMMARY

Thompson Creek Dam

Season	Inflow Annual (AF)	Inflow		Outflow Annual (AF)	Peak Inflow	
		Max-Day (CFS)	Min-Day (CFS)		Date	Q (CFS)
1970-71	32	5.5	.0	.0	Dec 21	12.0
1971-72	6	1.3	.0	.0	Dec 27	3.0
1972-73	161	34.0	.0	7.5	Feb 11	58.0
1973-74	37	10.0	.0	37.0	Jan 07	29.0
1974-75	0	.0	.0	.0		N.D.
1975-76	15	3.5	.0	.0	Feb 01	3.5
1976-77	37	6.8	.0	.0		N.D.
1977-78	R.I.					N.D.
1978-79	R.I.					N.D.
1979-80	R.I.					N.D.
1980-81	0	.0	.0	.0		N.D.
1981-82	62	9.4	.0	18.0	Mar 17	40.0
1982-83	1,118	114.0	.0	583.0	Mar 01	377.0
1983-84	70	2.7	.0	11.0	Dec 26	4.0
1984-85	0	.0	.0	.0		N.D.
1985-86	58	9.7	.0	58.0	Mar 16	27.0
1986-87	0	.0	.0	.0		N.D.
1987-88	2	.3	.0	2.1	Jan 17	.9
1988-89	2	.3	.0	2.0	Feb 04	.5
1989-90	6	.5	.0	5.6	Feb 17	.8
1990-91	76	17.0	.0	34.0	Mar 27	20.0
1991-92	190	16.0	.0	190.0	Mar 23	20.0
1992-93	1,267	57.0	.0	1,202.0	Jan 18	166.0
1993-94	0	.1	.0	.4	Mar 19	1.2
1994-95	330	35.0	.0	330.0	Jan 10	82.0
1995-96	392	31.0	.0	392.0	Feb 20	73.0
1996-97	48	11.0	.0	48.0		N.D.
1997-98	526	98.0	.0	525.0	Feb 23	299.0
1998-99						N.D.
1999-00	0	.0	.0	.0		N.D.
2000-01						N.D.

N.D. Not determined
R.I. Records incomplete
+ Less than 0.05 Acre Feet or less than 0.05 CFS, but greater than 0

APPENDIX F

HYDROLOGIC REPORT 2000 – 2001

EROSION CONTROL – LOCATION MAP

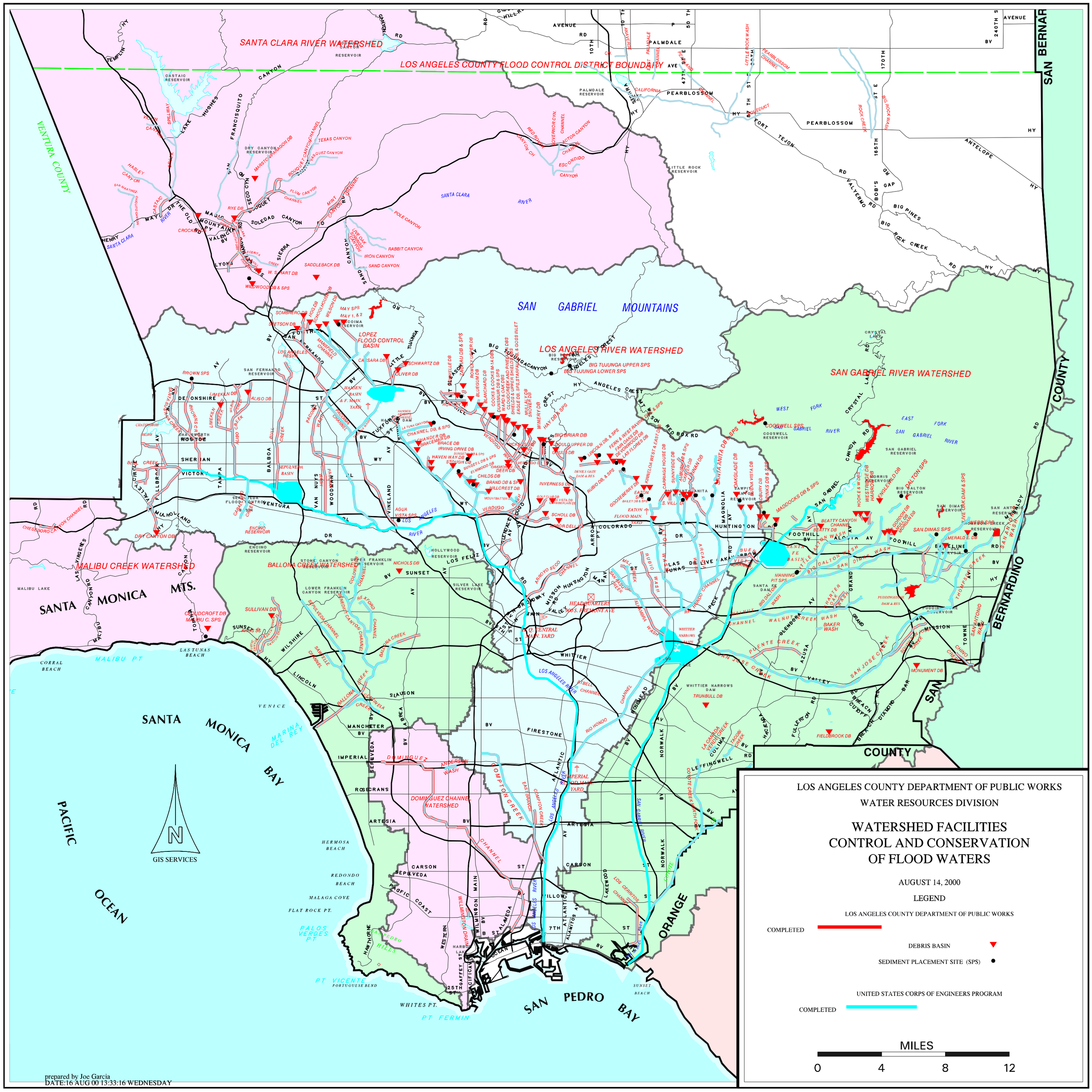
SANTA CLARA RIVER WATERSHED
LOS ANGELES COUNTY FLOOD CONTROL DISTRICT BOUNDARY
VENTURA COUNTY
SAN BERNARDINO COUNTY
SAN GABRIEL MOUNTAINS
LOS ANGELES RIVER WATERSHED
SAN GABRIEL RIVER WATERSHED
MALIBU CREEK WATERSHED
BALLONA CREEK WATERSHED
DOMINGUEZ CHANNEL WATERSHED
LOPEZ FLOOD CONTROL BASIN
SANTA MONICA MTS.
PACIFIC OCEAN
SANTA MONICA BAY
SAN PEDRO BAY
ORANGE COUNTY
GIS SERVICES
LOS ANGELES COUNTY DEPARTMENT OF PUBLIC WORKS
WATER RESOURCES DIVISION
WATERSHED FACILITIES
CONTROL AND CONSERVATION
OF FLOOD WATERS
AUGUST 14, 2000
LEGEND
LOS ANGELES COUNTY DEPARTMENT OF PUBLIC WORKS
COMPLETED
DEBRIS BASIN
SEDIMENT PLACEMENT SITE (SPS)
UNITED STATES CORPS OF ENGINEERS PROGRAM
COMPLETED
MILES
0
4
8
12
prepared by Joe Garcia
DATE:16 AUG 00 13:33:16 WEDNESDAY

APPENDIX G

HYDROLOGIC REPORT 2000 – 2001

WATER CONSERVATION – SUMMARY – DPW FACILITIES

WATER CONSERVATION – SUMMARY – DPW FACILITIES

BEN LOMOND

	Type	SHALLOW
	Season First Used	1958-59
Area	**Gross**	24 ACRES
	Wetted	17 ACRES
Capacities	**Channel****	9,000 CFS
	Intakes	400 CFS
	Storage	168 AF
	Percolation*	30 CFS
	Location	BOTH NORTH AND SOUTH SIDES OF SAN DIMAS WASH CHANNEL AT SOUTHWESTERLY CORNER OF INTERSECTION OF ARROW HIGHWAY AND BARRANCA AVENUE.
	Source of Water	COVINA IRRIGATING COMPANY, UNCONTROLLED RUNOFF, IMPORTED.
	Remarks	SPREADING GROUNDS UTILIZED TO CONSERVE EXCESS COVINA IRRIGATION COMPANY WATER RELEASED FROM THE COMMITTEE OF NINE.
	*	THE CAPACITY LISTED IS ESTIMATES OF INFILTRATION RATES.
	**	DESIGN CAPACITY OF MAIN CHANNEL.

BIG DALTON

	Type	SHALLOW
	Season First Used	1930-31
Area	**Gross**	24 ACRES
	Wetted	8 ACRES
Capacities	**Channel****	5,000 CFS
	Intakes	45 CFS
	Storage	12 AF
	Percolation*	12 CFS
	Location	WESTERLY SIDE OF BIG DALTON WASH, ONE HALF MILE ABOVE SIERRA MADRE AVENUE.
	Source of Water	CONTROLLED FLOWS FROM BIG DALTON DAM AND BIG DALTON DEBRIS BASIN.
	Remarks	
	*	THE CAPACITY LISTED IS ESTIMATES OF INFILTRATION RATES.
	**	DESIGN CAPACITY OF MAIN CHANNEL.

BRANFORD

	Type	DEEP
	Season First Used	1956-57
Area	**Gross**	12 ACRES
	Wetted	7 ACRES
Capacities	**Channel****	1,540 CFS
	Intakes	1,540 CFS
	Storage	137 AF
	Percolation*	1 CFS
	Location	SOUTHWESTERLY OF ARLETA AVENUE ABOVE CONFLUENCE OF TUJUNGA WASH AND PACOIMA DIVERSION CHANNEL.
	Source of Water	UNCONTROLLED FLOWS FROM BRANFORD STREET DRAIN.
	Remarks	INSTREAM SPREADING FACILITY. OUTLET CAPACITY 1,540 CFS TO PACOIMA DIVERSION CHANNEL.
	*	THE CAPACITY LISTED IS ESTIMATES OF INFILTRATION RATES.
	**	DESIGN CAPACITY OF MAIN CHANNEL.

WATER CONSERVATION – SUMMARY – DPW FACILITIES

BUENA VISTA

	Type	DEEP
	Season First Used	1954-55
Area	**Gross**	10 ACRES
	Wetted	6 ACRES
Capacities	**Channel****	2,900 CFS
	Intakes	2,900 CFS
	Storage	177 AF
	Percolation*	6 CFS
	Location	1.0 MILE EASTERLY OF SAWPIT WASH. 0.5 MILE NORTHERLY OF ARROW HIGHWAY, BETWEEN MERIDIAN STREET AND BUENA VISTA CHANNEL.
	Source of Water	CONTROLLED FLOW FROM SANTA FE DAM AND UNCONTROLLED FLOW FROM BUENA VISTA CHANNEL.
	Remarks	INSTREAM SPREADING FACILITY. TOTAL OUTLET CAPACITY OF 270 CFS.
	*	THE CAPACITY LISTED IS ESTIMATES OF INFILTRATION RATES.
	**	DESIGN CAPACITY OF MAIN CHANNEL.

CITRUS

	Type	SHALLOW
	Season First Used	1960-61
Area	**Gross**	19 ACRES
	Wetted	15 ACRES
Capacities	**Channel****	11,000 CFS
	Intakes	245 CFS
	Storage	80 AF
	Percolation*	28 CFS
	Location	SOUTH SIDE OF BIG DALTON WASH BETWEEN CITRUS AND CERRITOS AVENUES.
	Source of Water	CONTROLLED FLOWS FROM BIG DALTON DAM AND LITTLE DALTON DEBRIS DAMS. UNCONTROLLED FLOWS FROM BIG DALTON WASH.
	Remarks	THERE ARE 2 INTAKES, ONE IS A DROP INLET, THE OTHER AN AIR INFLATED RUBBER DAM.
	*	THE CAPACITY LISTED IS ESTIMATES OF INFILTRATION RATES.
	**	DESIGN CAPACITY OF MAIN CHANNEL.

DOMINGUEZ GAP

	Type	DEEP
	Season First Used	1957-58
Area	**Gross**	54 ACRES
	Wetted	24 ACRES
Capacities	**Channel****	146,000 CFS
	Intakes	20 CFS
	Storage	234 AF
	Percolation*	1 CFS
	Location	SOUTH OF DEL AMO BOULEVARD AND BORDERS THE EASTERN AND WESTERN SIDES OF THE LOS ANGELES RIVER
	Source of Water	CONTROLLED FLOW FROM LOS ANGELES RIVER LOW FLOW CHANNEL AND UNCONTROLLED FLOWS FROM STORM DRAINS.
	Remarks	EAST SIDE BASIN USED FOR FLOOD REGULATION WITH SOME CONSERVATION STORAGE. INTAKE CAPACITY IS 20 CFS FOR LOW FLOW DIVERSION FROM THE LOS ANGELES RIVER. THE WEST SIDE BASIN IS FED BY A 24-INCH CONCRETE PIPE FROM THE EAST SIDE BASIN.
	*	THE CAPACITY LISTED IS ESTIMATES OF INFILTRATION RATES.
	**	DESIGN CAPACITY OF MAIN CHANNEL.

WATER CONSERVATION – SUMMARY – DPW FACILITIES

EATON BASIN

	Type	DEEP
	Season First Used	1956-57
Area	**Gross**	16 ACRES
	Wetted	10 ACRES
Capacities	**Channel****	9,500 CFS
	Intakes	400 CFS
	Storage	284 AF
	Percolation*	10 CFS
	Location	EAST SIDE OF EATON WASH, NORTH OF DUARTE ROAD, 0.6 MILES SOUTH OF HUNTINGTON DRIVE.
	Source of Water	CONTROLLED FLOW FROM EATON WASH DAM AND UNCONTROLLED FLOWS BETWEEN DAM AND SPREADING BASIN.
	Remarks	
	*	THE CAPACITY LISTED IS ESTIMATES OF INFILTRATION RATES.
	**	DESIGN CAPACITY OF MAIN CHANNEL.

EATON WASH

	Type	DEEP & SHALLOW
	Season First Used	1947-48
Area	**Gross**	28 ACRES
	Wetted	25 ACRES
Capacities	**Channel****	6,600 CFS
	Intakes	200 CFS
	Storage	525 AF
	Percolation*	14 CFS
	Location	EASTERLY SIDE OF EATON WASH FROM BELOW EATON DAM TO FOOTHILL BOULEVARD.
	Source of Water	CONTROLLED FLOW FROM EATON WASH DAM. IMPORTED WATER CAN BE SPREAD IN STRIP BASINS.
	Remarks	
	*	THE CAPACITY LISTED IS ESTIMATES OF INFILTRATION RATES.
	**	DESIGN CAPACITY OF MAIN CHANNEL.

FORBES

	Type	SHALLOW
	Season First Used	1964-65
Area	**Gross**	21 ACRES
	Wetted	10 ACRES
Capacities	**Channel****	9,000 CFS
	Intakes	100 CFS
	Storage	87 AF
	Percolation*	5 CFS
	Location	SOUTH SIDE OF SAN DIMAS WASH BETWEEN LONE HILL AVENUE AND VALLEY CENTER AVENUE.
	Source of Water	CONTROLLED RELEASES FROM PUDDINGSTONE DIVERSION DAM, AND UNCONTROLLED FLOWS FROM SAN DIMAS WASH; ALSO IMPORTED .
	Remarks	
	*	THE CAPACITY LISTED IS ESTIMATES OF INFILTRATION RATES.
	**	DESIGN CAPACITY OF MAIN CHANNEL.

WATER CONSERVATION – SUMMARY – DPW FACILITIES

HANSEN

	Type	SHALLOW
	Season First Used	1944-45
Area	**Gross**	156 ACRES
	Wetted	105 ACRES
Capacities	**Channel****	22,000 CFS
	Intakes	400 CFS
	Storage	279 AF
	Percolation*	150 CFS
	Location	NORTHWESTERLY SIDE OF TUJUNGA WASH FROM ABOVE GLENOAKS BOULEVARD SOUTHWESTERLY TO SAN FERNANDO ROAD.
	Source of Water	CONTROLLED FLOWS FROM HANSEN DAM AND BIG TUJUNGA DAM.
	Remarks	
	*	THE CAPACITY LISTED IS ESTIMATES OF INFILTRATION RATES.
	**	DESIGN CAPACITY OF MAIN CHANNEL.

IRWINDALE\MANNING PIT

	Type	DEEP
	Season First Used	1958-59
Area	**Gross**	62 ACRES
	Wetted	30 ACRES
Capacities	**Channel****	25,500 CFS
	Intakes	400 CFS
	Storage	1,134 AF
	Percolation*	60 CFS
	Location	NORTHEASTERLY OF INTERSECTION OF BIG DALTON CHANNEL AND IRWINDALE AVENUE; CONTINUES 1,300 FEET EAST OF IRWINDALE VENUE
	Source of Water	BIG DALTON CHANNEL CONTROLLED FLOWS FROM BIG AND LITTLE DALTON DEBRIS DAMS AND PUDDINGSTONE DIVERSION DAM; UNCONTROLLED FLOWS; ALSO IMPORTED RELEASES .
	Remarks	IRWINDALE CLEANED OUT SUMMER OF 1996.
	*	THE CAPACITY LISTED IS ESTIMATES OF INFILTRATION RATES.
	**	DESIGN CAPACITY OF MAIN CHANNEL.

LITTLE DALTON

	Type	SHALLOW
	Season First Used	1931-32
Area	**Gross**	14 ACRES
	Wetted	5 ACRES
Capacities	**Channel****	8,600 CFS
	Intakes	20 CFS
	Storage	5 AF
	Percolation*	15 CFS
	Location	WESTERLY OF GLENDORA MT. ROAD FROM LITTLE DALTON DEBRIS BASIN SOUTH TO EAST PALM DRIVE.
	Source of Water	CONTROLLED FLOW FROM LITTLE DALTON DEBRIS BASIN AND IMPORTED WATER. (IMPORTED WATER DELIVERY COMMENCED IN OCTOBER 1995).
	Remarks	
	*	THE CAPACITY LISTED IS ESTIMATES OF INFILTRATION RATES.
	**	DESIGN CAPACITY OF MAIN CHANNEL.

WATER CONSERVATION – SUMMARY – DPW FACILITIES

LIVE OAK

	Type	SHALLOW
	Season First Used	1961-62
Area	**Gross**	5 ACRES
	Wetted	2 ACRES
Capacities	**Channel****	2,600 CFS
	Intakes	15 CFS
	Storage	2 AF
	Percolation*	13 CFS
	Location	WESTERLY SIDE OF LIVE OAK WASH. NORTH OF BASE LINE ROAD (PROJECTED).
	Source of Water	CONTROLLED FLOW FROM LIVE OAK DAM AND LIVE OAK DEBRIS BASIN
	Remarks	
	*	THE CAPACITY LISTED IS ESTIMATES OF INFILTRATION RATES.
	**	DESIGN CAPACITY OF MAIN CHANNEL.

LOPEZ

	Type	SHALLOW
	Season First Used	1956-57
Area	**Gross**	18 ACRES
	Wetted	12 ACRES
Capacities	**Channel****	11,000 CFS
	Intakes	25 CFS
	Storage	24 AF
	Percolation*	15 CFS
	Location	SOUTHEASTERLY SIDE OF PACOIMA WASH, NORTHEASTERLY OF FOOTHILL BOULEVARD.
	Source of Water	CONTROLLED FLOW FROM PACOIMA DAM AND LOPEZ FLOOD CONTROL BASIN
	Remarks	
	*	THE CAPACITY LISTED IS ESTIMATES OF INFILTRATION RATES.
	**	DESIGN CAPACITY OF MAIN CHANNEL.

PACOIMA

	Type	SHALLOW
	Season First Used	1932-33
Area	**Gross**	169 ACRES
	Wetted	107 ACRES
Capacities	**Channel****	17,000 CFS
	Intakes	600 CFS
	Storage	440 AF
	Percolation*	65 CFS
	Location	BOTH SIDES OF OLD PACOIMA WASH CHANNEL FROM ARLETA AVENUE SOUTHWESTERLY TO WOODMAN AVENUE.
	Source of Water	CONTROLLED FLOW FROM PACOIMA DAM. PARTIALLY CONTROLLED FLOW FROM LOPEZ FLOOD CONTROL BASIN, UNCONTROLLED FLOW FROM EAST CANYON AND PACOIMA WASH AND IMPORTED WATER.
	Remarks	
	*	THE CAPACITY LISTED IS ESTIMATES OF INFILTRATION RATES.
	**	DESIGN CAPACITY OF MAIN CHANNEL.

WATER CONSERVATION – SUMMARY – DPW FACILITIES

PECK ROAD

	Type	DEEP
	Season First Used	1959-60
Area	**Gross**	157 ACRES
	Wetted	105 ACRES
Capacities	**Channel****	30,100 CFS
	Intakes	30,100 CFS
	Storage	3,347 AF
	Percolation*	25 CFS
	Location	CONFLUENCE OF SAWPIT AND SANTA ANITA WASHES.
	Source of Water	CONTROLLED RELEASES FROM SANTA ANITA AND SAWPIT DEBRIS BASINS AND UNCONTROLLED FLOWS FROM LOCAL RUNOFF VIA SAWPIT AND SANTA ANITA WASHES.
	Remarks	INSTREAM SPREADING FACILITY.
	*	THE CAPACITY LISTED IS ESTIMATES OF INFILTRATION RATES.
	**	DESIGN CAPACITY OF MAIN CHANNEL.

RIO HONDO COASTAL

	Type	SHALLOW
	Season First Used	1937-38
Area	**Gross**	570 ACRES
	Wetted	430 ACRES
Capacities	**Channel****	40,000 CFS
	Intakes	1,950 CFS
	Storage	3,694 AF
	Percolation*	400 CFS
	Location	EASTERLY SIDE OF RIO HONDO SOUTHERLY FROM S. P. R. R. (SOUTH OF WHITTIER BLVD.) TO SLAUSON AVENUE; WEST SIDE OF RIO HONDO CHANNEL FROM 0.2 MILE ABOVE WHITTIER BOULEVARD SOUTH TO FOSTER BRIDGE BOULEVARD.
	Source of Water	CONTROLLED RELEASES FROM SAN GABRIEL CANYON DAMS, SANTA FE AND WHITTIER NARROWS DAMS. UNCONTROLLED RUNOFF VIA SAN GABRIEL RIVER, RIO HONDO CHANNEL AND THEIR TRIBUTARIES; ALSO IMPORTED AND RECLAIMED WATER.
	Remarks	IN COOPERATION WITH THE CORPS OF ENGINEERS. THE DISTRICT OPERATES 1,200 ACRE-FOOT POOL AT WHITTIER NARROWS DAM FOR RETENTION OF STORM WATER.
	*	THE CAPACITY LISTED IS ESTIMATES OF INFILTRATION RATES.
	**	DESIGN CAPACITY OF MAIN CHANNEL.

S.G. RIVER (MONTEBELLO FOREBAY)

	Type	SHALLOW
	Season First Used	1954-55
Area	**Gross**	308 ACRES
	Wetted	308 ACRES
Capacities	**Channel****	20,000 CFS
	Intakes	In river Percolation
	Storage	913 AF
	Percolation*	75 CFS
	Location	HEADWORKS TO FIRESTONE AVE. ONLY. STORAGE BEHIND THE SEVEN RUBBER DAMS INSTALLED ON DROP STRUCTURE.
	Source of Water	SAME AS SAN GABRIEL COASTAL.
	Remarks	
	*	THE CAPACITY LISTED IS ESTIMATES OF INFILTRATION RATES.
	**	DESIGN CAPACITY OF MAIN CHANNEL.

WATER CONSERVATION – SUMMARY – DPW FACILITIES

S.G. RIVER (SAN GABRIEL VALLEY)

	Type	
	Season First Used	1965-66
Area	**Gross**	196 ACRES
	Wetted	196 ACRES
Capacities	**Channel****	41,000-98,000 CFS
	Intakes	In river Percolation
	Storage	0 AF
	Percolation*	180 CFS
	Location	SAN GABRIEL RIVER FROM SANTA FE DAM TO WHITTIER NARROWS DAM.
	Source of Water	CONTROLLED FLOW FROM DAMS IN SAN GABRIEL CANYON, SANTA FE DAM AND UNCONTROLLED VALLEY RUNOFF BELOW SANTA FE DAM; ALSO IMPORTED WATER.
	Remarks	
	*	THE CAPACITY LISTED IS ESTIMATES OF INFILTRATION RATES.
	**	DESIGN CAPACITY OF MAIN CHANNEL.

SAN DIMAS CANYON

	Type	SHALLOW
	Season First Used	1965-66
Area	**Gross**	22 ACRES
	Wetted	11 ACRES
Capacities	**Channel****	7,000 CFS
	Intakes	25 CFS
	Storage	22 AF
	Percolation*	12 CFS
	Location	SOUTHEAST SIDE OF SAN DIMAS WASH BETWEEN PUDDINGSTONE DIVERSION AND SAN DIMAS CANYON ROAD.
	Source of Water	CONTROLLED RELEASES FROM PUDDINGSTONE DIVERSION DAM; UNCONTROLLED FLOW FROM LOCAL STORM RUNOFF.
	Remarks	
	*	THE CAPACITY LISTED IS ESTIMATES OF INFILTRATION RATES.
	**	DESIGN CAPACITY OF MAIN CHANNEL.

SAN GABRIEL CANYON

	Type	DEEP
	Season First Used	1917
Area	**Gross**	165 ACRES
	Wetted	140 ACRES
Capacities	**Channel****	98,000 CFS
	Intakes	150 CFS
	Storage	8,170 AF
	Percolation*	50 CFS
	Location	EASTERLY SIDE OF SAN GABRIEL RIVER. BELOW MOUTH OF SAN GABRIEL CANYON. NORTH OF THE CITY OF AZUSA.
	Source of Water	SAN GABRIEL RIVER CONTROLLED RELEASES FROM COGSWELL DAM, SAN GABRIEL DAM, AND MORRIS DAM. COMMITTEE OF NINE SURPLUS FLOWS AND IMPORTED WATER.
	Remarks	THERE ARE 2 INTAKES TO THIS FACILITY, ONE IS FED FROM SURPLUS 'COMMITTEE OF NINE' FLOWS, THE OTHER IS FROM THE RIVER INTO BASIN NO. 2.
	*	THE CAPACITY LISTED IS ESTIMATES OF INFILTRATION RATES.
	**	DESIGN CAPACITY OF MAIN CHANNEL.

WATER CONSERVATION – SUMMARY – DPW FACILITIES

SAN GABRIEL COASTAL

	Type	SHALLOW
	Season First Used	1938-39
Area	**Gross**	128 ACRES
	Wetted	96 ACRES
Capacities	**Channel****	20,000 CFS
	Intakes	350 CFS
	Storage	550 AF
	Percolation*	75 CFS
	Location	WESTERLY SIDE OF SAN GABRIEL RIVER, SOUTHERLY FROM WHITTIER BOULEVARD TO WASHINGTON BOULEVARD.
	Source of Water	CONTROLLED RELEASES FROM SAN GABRIEL CANYON DAMS, SANTA FE AND WHITTIER NARROWS DAMS. ALSO IMPORTED AND RECLAIMED WATER.
	Remarks	
	*	THE CAPACITY LISTED IS ESTIMATES OF INFILTRATION RATES.
	**	DESIGN CAPACITY OF MAIN CHANNEL.

SANTA ANITA

	Type	SHALLOW
	Season First Used	1944-45
Area	**Gross**	20 ACRES
	Wetted	8 ACRES
Capacities	**Channel****	12,000 CFS
	Intakes	20 CFS
	Storage	25 AF
	Percolation*	5 CFS
	Location	WESTERLY SIDE OF SANTA ANITA WASH 1.25 MILES ABOVE FOOTHILL BOULEVARD.
	Source of Water	CONTROLLED FLOW FROM SANTA ANITA DAM AND SANTA ANITA DEBRIS BASIN.
	Remarks	THE HEADWORKS LOCATED UPSTREAM OF THE DEBRIS BASIN DIVERTS WATER TO SANTA ANITA SPREADING GROUNDS AND CITY OF SIERRA MADRE SPREADING GROUNDS
	*	THE CAPACITY LISTED IS ESTIMATES OF INFILTRATION RATES.
	**	DESIGN CAPACITY OF MAIN CHANNEL.

SANTA FE

	Type	SHALLOW
	Season First Used	1953-54
Area	**Gross**	338 ACRES
	Wetted	168 ACRES
Capacities	**Channel****	98,000 CFS
	Intakes	600 CFS
	Storage	540 AF
	Percolation*	400 CFS
	Location	WITHIN SANTA FE DAM RESERVOIR AND SPILLWAY AREAS.
	Source of Water	CONTROLLED FLOWS FROM SAN GABRIEL CANYON RESERVOIRS. UNCONTROLLED FLOWS FROM SAN GABRIEL RIVER BELOW MORRIS RESERVOIR; ALSO IMPORTED WATER.
	Remarks	NEW DIVERSION HEADWORKS STRUCTURE CONSTRUCTED, CONSISTING OF A NEW RUBBER DAM AND 2 INTAKES GATES.
	*	THE CAPACITY LISTED IS ESTIMATES OF INFILTRATION RATES.
	**	DESIGN CAPACITY OF MAIN CHANNEL.

WATER CONSERVATION – SUMMARY – DPW FACILITIES

SAWPIT

	Type	SHALLOW
	Season First Used	1946-47
Area	**Gross**	12 ACRES
	Wetted	4 ACRES
Capacities	**Channel****	5,000 CFS
	Intakes	30 CFS
	Storage	13 AF
	Percolation*	12 CFS
	Location	WESTERLY SIDE OF SAWPIT WASH BELOW MOUTH OF CANTON NEAR NORUMBEGA DRIVE, MONROVIA.
	Source of Water	CONTROLLED FLOWS FROM SAWPIT DAM AND SAWPIT DEBRIS BASIN.
	Remarks	
	*	THE CAPACITY LISTED IS ESTIMATES OF INFILTRATION RATES.
	**	DESIGN CAPACITY OF MAIN CHANNEL.

VALLY BLVD. RUBBER DAM

	Type	SHALLOW
	Season First Used	1994-95
Area	**Gross**	60 ACRES
	Wetted	60 ACRES
Capacities	**Channel****	60,000 CFS
	Intakes	In river Percolation
	Storage	400 AF
	Percolation*	0 CFS
	Location	DROP STRUCTURE SOUTH OF VALLY BLVD, AT THE CONFLUENCE OF THE SAN GABRIEL RIVER AND WALNUT CREEK.
	Source of Water	SAME AS FORBES AND IRWINDALE/MANNING PIT CAN ALSO RECEIVE RELEASE FROM SAN GABRIEL CANYON RERSERVOIRS AND IMPORTED WATER.
	Remarks	
	*	THE CAPACITY LISTED IS ESTIMATES OF INFILTRATION RATES.
	**	DESIGN CAPACITY OF MAIN CHANNEL.

WALNUT

	Type	DEEP
	Season First Used	1962-63
Area	**Gross**	16 ACRES
	Wetted	8 ACRES
Capacities	**Channel****	8,000 CFS
	Intakes	150 CFS
	Storage	170 AF
	Percolation*	5 CFS
	Location	WEST SIDE OF WALNUT WASH, NORTH OF SAN BERNARDINO FREEWAY.
	Source of Water	CONTROLLED FLOW FROM PUDDINGSTONE DAM AND UNCONTROLLED FLOWS FROM WALNUT CREEK.
	Remarks	BASIN CLEANED OUT SUMMER OF 1995.
	*	THE CAPACITY LISTED IS ESTIMATES OF INFILTRATION RATES.
	**	DESIGN CAPACITY OF MAIN CHANNEL.

APPENDIX H

HYDROLOGIC REPORT 2000 – 2001

WATER CONSERVATION – SUMMARY – NON DPW FACILITIES

WATER CONSERVATION – SUMMARY – NON DPW FACILITIES

FISH CANYON (COMMITTEE OF NINE)

	Type	SHALLOW BASINS
	Season First Used	ABOUT 1917
Area	**Gross**	6 ACRES
	Wetted	4.0 ACRES
Capacities	**Channel****	CFS
	Intakes	CFS
	Storage	AF
	Percolation*	7 CFS
	Location	WESTERLY SIDE OF SAN GABRIEL RIVER BELOW MOUTH OF FISH CANYON AND NORTH OF THE CITY OF AZUSA.
	Source of Water	THE 'COMMITTEE OF NINE'.
	Remarks	OWNED AND OPERATED BY CAL-AMERICAN WATER COMPANY.
	*	THE CAPACITY LISTED IS ESTIMATES OF INFILTRATION RATES.
	**	DESIGN CAPACITY OF MAIN CHANNEL.

SIERRA MADRE (CITY OF SIERRA MADRE)

	Type	SHALLOW BASINS
	Season First Used	ABOUT 1933
Area	**Gross**	22 ACRES
	Wetted	9.0 ACRES
Capacities	**Channel****	CFS
	Intakes	25 CFS
	Storage	47 AF
	Percolation*	15 CFS
	Location	CITY OF SIERRA MADRE, SOUTH SIDE OF GRANDVIEW AVENUE, ONE HALF MILE WEST OF SANTA ANITA AVENUE.
	Source of Water	LITTLE SANTA ANITA CREEK AND STREET RUNOFF ALSO CONTROLLED FLOWS FROM SANTA ANITA DAM.
	Remarks	THE DEPARTMENT DIVERTS WATER TO THIS FACILITY VIA SANTA ANITA HEADWORKS.
	*	THE CAPACITY LISTED IS ESTIMATES OF INFILTRATION RATES.
	**	DESIGN CAPACITY OF MAIN CHANNEL.

THOMPSON CREEK POMONA VALLEY PROTECTIVE ASSOCIATION

	Type	DITCHES CHECKS AND DEEP BASIN
	Season First Used	ABOUT 1928
Area	**Gross**	53 ACRES
	Wetted	37.0 ACRES
Capacities	**Channel****	CFS
	Intakes	35 CFS
	Storage	AF
	Percolation*	15 CFS
	Location	SOUTHERLY FROM, AND ADJACENT TO THOMPSON CREEK DAM, EAST SIDE OF CREEK
	Source of Water	COBAL, WILLIAMS, PALMER, AND PADUA CREEKS, ALSO THOMPSON CREEK, WHEN RESERVOIR ABOVE ELEVATION 1,625.
	Remarks	OPERATED BY POMONA VALLEY PROTECTIVE ASSOCIATION. THE DEPARTMENT DIVERTS WATER TO THIS FACILITY VIA THE PALMER DIVERSION.
	*	THE CAPACITY LISTED IS ESTIMATES OF INFILTRATION RATES.
	**	DESIGN CAPACITY OF MAIN CHANNEL.

WATER CONSERVATION – SUMMARY – NON DPW FACILITIES

TUJUNGA (L.A. CITY DEPT. OF WATER AND POWER)

	Type	SHALLOW BASINS
	Season First Used	ABOUT 1931-32
Area	**Gross**	188 ACRES
	Wetted	83.2 ACRES
Capacities	**Channel****	22000.0 CFS
	Intakes	400 CFS
	Storage	100 AF
	Percolation*	120 CFS
	Location	SAN FERNANDO VALLEY, EAST SIDE OF TUJUNGA WASH AT ROSCOE BOULEVARD
	Source of Water	CONTROLLED RELEASES FROM BIG TUJUNGA CAM, HANSEN DAM AND UNCONTROLLED RUNOFF FROM STORM DRAINS, ALSO IMPORTED WATER.
	Remarks	THE DEPARTMENT HAS AN AGREEMENT WITH THE CITY OF LOS ANGELES TO OPERATE THIS FACILITY.
	*	THE CAPACITY LISTED IS ESTIMATES OF INFILTRATION RATES.
	**	DESIGN CAPACITY OF MAIN CHANNEL.

APPENDIX I

HYDROLOGIC REPORT 2000 – 2001

WATER CONSERVATION – SUMMARY – WATER CONSERVED

WATER CONSERVATION – SUMMARY – WATER CONSERVED

Los Angeles County Department of Public Works, Hydraulic / Water Conservation Division

Total Monthly Water Conserved (acre-feet) during Water Year 2000-2001

AREA	SPREADING FACILITY	OCT	NOV	DEC	JAN	FEB	MAR	APR	MAY	JUN	JUL	AUG	SEP	ACC TOT	Historic Average	Historic High	
																Amount	Wtr Yr
San	Branford	83	13	15	115	80	35	119	19	21	22	21	19	562	366	724	1969-70
Fernando	Hansen	0	0	200	1,041	2,432	5,048	2,628	345	0	0	0	0	11,694	10,897	35,221	1982-83
Valley	Lopez	0	0	0	0	0	136	36	0	0	0	0	0	172	568	1,938	1967-68
Facilities	Pacoima	88	125	0	708	1,231	1,446	228	0	0	0	0	0	3,826	4,956	22,973	1982-83
	Tujunga†	0	0	0	82	415	330	32	123	417	134	90	62	1,685	9,384	42,817	1982-83
	SUBTOTAL	171	138	215	1,946	4,158	6,995	3,043	487	438	156	111	81	17,939	26,171		
San	Ben Lomond	11	191	9	11	31	149	51	90	24	0	0	0	567	2,969	6,444	1966-67
Gabriel	Big Dalton	0	0	0	0	0	0	0	137	0	111	2	0	250	658	3,766	1966-67
Valley	Buena Vista	28	10	3	46	36	21	11	8	18	31	32	4	248	665	2,731	1957-58
Facilities	Citrus	48	0	15	259	348	53	72	43	38	0	0	0	876	874	6,478	1994-95
	Eaton Basin	89	30	56	261	438	153	199	92	108	116	97	124	1,763	1,008	3,481	1982-83
	Eaton Grounds	0	0	0	67	0	609	53	23	2	0	0	0	754	962	4,761	1982-83
	Forbes	180	0	0	45	9	0	0	0	0	0	0	0	234	823	2,628	1986-87
	Irwindale	1,600	400	32	370	857	69	109	0	0	0	0	0	3,437	5,162	41,280	1991-92
	Little Dalton	497	524	662	669	238	83	48	3	0	0	0	0	2,724	422	5,546	1995-96
	Live Oak	0	0	0	0	0	9	31	33	1	0	0	0	74	221	1,660	1982-83
	Peck Road	245	54	36	1,010	1,660	670	328	108	241	74	80	48	4,554	7,925	50,026	1982-83
	San Dimas Canyon	0	0	0	1	1	208	100	94	416	0	0	0	820	1,919	6,049	1982-83
	San Gabriel Canyon	42	2,150	4,780	348	246	1,400	1,370	811	1,110	1,420	4,850	4,090	22,617	10,699	32,840	1999-00
	Santa Anita	7	0	0	3	99	221	14	21	1	0	0	0	366	487	1,641	1965-66
	Santa Fe SG	4,000	8,280	5,950	576	0	0	0	0	0	2,490	3,960	1,240	26,496	26,547	124,478	1982-83
	Sawpit	47	29	51	28	23	64	38	48	56	42	25	22	473	781	2,926	1982-83
	Walnut	68	36	433	41	610	726	150	158	138	114	109	99	2,682	1,220	3,063	1992-93
	Sierra Madre†	82	0	0	50	293	520	159	96	0	0	0	0	1,200	1,765	5,003	1966-67
	Fish Canyon†	399	356	276	286	316	650	617	649	635	503	614	439	5,740	6,142	9,737	1978-79
S.G. River Perc.	Morris Dam to Sta. F190	1,033	2,074	1,498	466	147	533	480	454	394	1,047	389	2,813	11,328	21,906	119,600	1977-78
Reach from Morris	Sta. F190 to Santa Fe Dam O/F	693	1,411	801	447	566	130	75	158	197	740	866	699	6,783	13,933	141,600	1968-69
Dam to W.N. Dam	Santa Fe Dam O/F to Sta. F263	2,313	2,281	2,925	2,600	4,561	1,156	2,805	2,406	584	2,498	2,035	2,147	28,311	18,731	79,083	1991-92
	SUBTOTAL	11,382	17,826	17,527	7,584	10,479	7,424	6,710	5,432	3,963	9,186	13,059	11,725	122,297	125,819		
Coastal	Rio Hondo Coastal	2,858	3,509	4,755	4,449	11,058	3,371	4,317	0	0	0	0	0	34,317	65,404	96,363	1978-79
Plain	Whittier Narrows Reservoir	1,597	1,108	1,618	3,310	3,568	425	1,104	174	255	371	306	362	14,198	30,591	58,605	1978-79
Facilities	San Gabriel Coastal	7,732	3,994	4,283	3,391	10,550	3,373	8,247	2,526	5,208	1,489	2,982	5,938	59,713	30,247	81,586	1992-93
	Dominguez Gap	461	56	321	88	0	0	0	0	0	0	0	0	926	575	2,414	1961-62
	SUBTOTAL	12,648	8,667	10,977	11,238	25,176	7,169	13,668	2,700	5,463	1,860	3,288	6,300	109,154	126,817		
Total Water Conserved		24,201	26,631	28,719	20,768	39,813	21,588	23,421	8,619	9,864	11,202	16,458	18,106	249,390	278,807		

NOTES: † : Owned by other entities
E: Estimated

APPENDIX J

HYDROLOGIC REPORT 2000 – 2001

WATER CONSERVATION – SUMMARY – IMPORTED WATER

WATER CONSERVATION – SUMMARY – IMPORTED WATER

IMPORTED WATER OUTLET RELEASES: *Water Delivered in Acre-Feet*

	San Dimas	Thompson Creek	Alhambra	USGMWD	TVMWD	Olden Street	SGVMWD Spreading Ground				Waste to the Ocean	Monthly Total Spread
	CB	CB	CB	USG3	Little DaPM26	L.A.	Canyon Basin	Beatt	Big D	San D		
OCT	0.0	0.0	0.0	3,061.4	530.7	0.0	0.0	768.0	0.0	1,742.0	0.0	6,102.1
NOV	0.0	6,826.3	0.0	11,096.6	519.2	0.0	898.0	1,746.0	0.0	0.0	0.0	21,086.1
DEC	5,669.6	3,312.0	0.0	9,478.6	595.3	0.0	3,138.0	0.0	0.0	0.0	0.0	22,193.5
JAN	0.0	0.0	0.0	334.2	336.7	0.0	0.0	0.0	0.0	0.0	0.0	1,270.9
FEB	0.0	0.0	0.0	0.0	153.0	0.0	0.0	0.0	0.0	0.0	0.0	153.0
MAR	0.0	0.0	0.0	0.0	0.0	0.0	0.0	0.0	0.0	0.0	0.0	0.0
APR	5,071.9	2,570.8	0.0	0.0	0.0	0.0	0.0	0.0	0.0	0.0	0.0	7,642.7
MAY	0.0	0.0	0.0	0.0	0.0	0.0	0.0	0.0	0.0	0.0	0.0	0.0
JUN	0.0	0.0	0.0	0.0	0.0	0.0	0.0	0.0	0.0	0.0	0.0	0.0
JUL	0.0	0.0	0.0	0.0	0.0	0.0	0.0	0.0	0.0	0.0	0.0	0.0
AUG	0.0	0.0	0.0	0.0	0.0	0.0	0.0	0.0	0.0	0.0	0.0	0.0
SEP	0.0	0.0	0.0	0.0	0.0	0.0	0.0	0.0	0.0	0.0	0.0	0.0
TOTAL	10,741.5	12,709.1	0.0	24,570.8	2,134.9	0.0	4,036.0	2,514.0	0.0	1,742.0	0.0	**58,448.3**

APPENDIX K

HYDROLOGIC REPORT 2000 – 2001

WATER CONSERVATION – SUMMARY – RECLAIMED WATER

WATER CONSERVATION – SUMMARY – RECLAIMED WATER

RECLAIMED WATER: *Water Delivered in Acre-Feet*

	WHITTIER NARROWS PLANT				SAN JOSE PLANT				POMONA PLANT	MONTHLY TOTAL SPREAD
	Delivered		Wasted	Monthly Spread	Delivered		Wasted	Monthly Spread		
	Rio Hondo	San Gabriel			Rio Hondo	San Gabriel				
OCT	181.4	222.4	0.0	403.8	964.1	5682.0	0.0	6646.1	209.2	7259.1
NOV	344.0	331.5	0.0	675.5	895.3	966.6	0.0	1861.9	214.3	2751.7
DEC	564.2	226.1	0.0	790.3	1388.3	421.6	0.0	1809.9	175.6	2775.8
JAN	782.3	0.0	48.7	733.6	1265.8	681.2	190.3	1756.7	205.0	2695.4
FEB	764.5	0.0	118.6	645.9	945.8	984.1	585.3	1344.5	263.4	2253.8
MAR	761.3	0.0	0.0	761.3	881.9	1012.1	0.0	1894.0	626.3	3281.6
APR	326.3	386.0	58.2	654.1	572.5	1273.9	197.7	1648.7	401.2	2704.0
MAY	0.0	708.2	0.0	708.2	0.0	2608.3	0.0	2608.3	285.9	3602.4
JUN	0.0	651.9	0.0	651.9	0.0	4072.1	0.0	4072.1	204.0	4928.0
JUL	0.0	715.6	0.0	715.6	0.0	1996.0	0.0	1996.0	137.4	2849.0
AUG	0.0	777.3	0.0	777.3	0.0	3177.1	0.0	3177.1	79.0	4034.2
SEP	0.0	735.8	0.0	735.8	0.0	6349.9	0.0	6349.9	122.0	7207.7
TOTAL	3724.0	4754.8	225.5	8253.3	6913.7	29224.9	973.3	35165.2	2924.2	**46342.7**

APPENDIX L

HYDROLOGIC REPORT 2000 – 2001

WATER CONSERVATION – SUMMARY – GROUND WATER

WATER CONSERVATION – SUMMARY – GROUND WATER

GROUND WATER FLUCTUATION:

Location: Coastal Plain, City of Long Beach **Ground Surface Elevation: 26.6 ft above MSL**

STATION	460K
	WS Elev.
Jan-50	-30.1
Feb-50	-30.7
Mar-50	-27.3
Apr-50	-45.6
May-50	-41.4
Jun-50	-45.1
Jul-50	-49.6
Aug-50	-56.9
Sep-50	-51.9
Oct-50	-55.3
Nov-50	-60.7
Dec-50	-43.8
Jan-51	-49.9
Feb-51	-49.4
Mar-51	-54
Apr-51	-66.9
May-51	-57.9
Jun-51	-67.7
Jul-51	-67.1
Aug-51	-77.2
Sep-51	-70.4
Oct-51	-73.3
Nov-51	-67.6
Dec-51	-53.8
Jan-52	-46.8
Feb-52	-45.7
Mar-52	-44.7
Apr-52	-47.4
May-52	-40.3
Jun-52	-45.9
Jul-52	-62.7
Aug-52	-74
Sep-52	-76.4
Oct-52	-72.4
Nov-52	-65
Dec-52	-47.7
Jan-53	-43.2
Feb-53	-42.4
Mar-53	-49.9
Apr-53	-61.6
May-53	-60.6
Jun-53	-71.9
Jul-53	-80.9
Aug-53	-83.5
Sep-53	-78.4

WATER CONSERVATION – SUMMARY – GROUND WATER

GROUND WATER FLUCTUATION:

Location: Coastal Plain, City of Long Beach **Ground Surface Elevation: 26.6 ft above MSL**

STATION	460K
	WS Elev.
Oct-53	-78.7
Nov-53	-72.3
Dec-53	-63.3
Jan-54	-58.9
Feb-54	-49
Mar-54	-58.3
Apr-54	-54.4
May-54	-61
Jun-54	-75.2
Jul-54	-80.4
Aug-54	-87.4
Sep-54	-88.9
Oct-54	-82.9
Nov-54	-74.9
Dec-54	-63.7
Jan-55	-63.6
Feb-55	-51.3
Mar-55	-59.4
Apr-55	-67.1
May-55	-59.2
Jun-55	-70.7
Jul-55	-77.7
Aug-55	-86.2
Sep-55	-93.3
Oct-55	-93.7
Nov-55	-78.7
Dec-55	-69.3
Jan-56	-72.7
Feb-56	-68.1
Mar-56	-74.7
Apr-56	-83.5
May-56	-82.3
Jun-56	-87.7
Jul-56	-90
Aug-56	-99
Sep-56	-100.8
Oct-56	-101.3
Nov-56	-97.7
Dec-56	-98.2
Jan-57	-94.6
Feb-57	-69.6
Mar-57	-65.4
Apr-57	-69.4
May-57	-87.4
Jun-57	-88.3

WATER CONSERVATION – SUMMARY – GROUND WATER

GROUND WATER FLUCTUATION:

Location: Coastal Plain, City of Long Beach **Ground Surface Elevation: 26.6 ft above MSL**

STATION	460K
	WS Elev.
Jul-57	-92.5
Aug-57	-95
Sep-57	-99
Oct-57	-100
Nov-57	-85
Dec-57	-84.1
Jan-58	-76.8
Feb-58	-72.9
Mar-58	-77.5
Apr-58	-70.6
May-58	-87.5
Jun-58	-92.2
Jul-58	-95.4
Aug-58	-93.6
Sep-58	-91.7
Oct-58	-87.6
Nov-58	-84
Dec-58	-82.8
Jan-59	-78.7
Feb-59	-78.3
Mar-59	-74
Apr-59	-81.2
May-59	-82.9
Jun-59	-87.5
Jul-59	-94.2
Aug-59	-96.2
Sep-59	-98.2
Oct-59	-96.7
Nov-59	-95.2
Dec-59	-93.5
Jan-60	-83.6
Feb-60	-81.5
Mar-60	-85.8
Apr-60	-83.5
May-60	-75.3
Jun-60	-74.2
Jul-60	-76.5
Aug-60	-92.2
Sep-60	-84.2
Oct-60	-95
Nov-60	-91.3
Dec-60	-76.6
Jan-61	-74.2
Feb-61	-81.8
Mar-61	-91

WATER CONSERVATION – SUMMARY – GROUND WATER

GROUND WATER FLUCTUATION:

Location: Coastal Plain, City of Long Beach **Ground Surface Elevation: 26.6 ft above MSL**

STATION	460K
	WS Elev.
Apr-61	-92.5
May-61	-81.2
Jun-61	-108.8
Jul-61	-111.7
Aug-61	-112.9
Sep-61	-113
Oct-61	-106.8
Nov-61	-101.4
Dec-61	-92.7
Jan-62	-80.7
Feb-62	-78.1
Mar-62	-74.8
Apr-62	-76.1
May-62	-92.7
Jun-62	-91.7
Jul-62	-100.1
Aug-62	-107.6
Sep-62	-109.9
Oct-62	-103.9
Nov-62	-73
Dec-62	-64.4
Jan-63	-55.3
Feb-63	-50.9
Mar-63	-48.7
Apr-63	-47.3
May-63	-48.1
Jun-63	-49.3
Jul-63	-50.5
Aug-63	-63.1
Sep-63	-68.8
Oct-63	-60.4
Nov-63	-46.8
Dec-63	-33.4
Jan-64	-36.4
Feb-64	-33
Mar-64	-31.6
Apr-64	-32.6
May-64	-39.4
Jun-64	-45.9
Jul-64	-47.7
Aug-64	-52
Sep-64	-53.9
Oct-64	-50.5
Nov-64	-40.9
Dec-64	-34.7

WATER CONSERVATION – SUMMARY – GROUND WATER

GROUND WATER FLUCTUATION:

Location: Coastal Plain, City of Long Beach **Ground Surface Elevation: 26.6 ft above MSL**

STATION	460K
	WS Elev.
Jan-65	-30.7
Feb-65	-30.3
Mar-65	-32.7
Apr-65	-32
May-65	-35.7
Jun-65	-40.3
Jul-65	-40.1
Aug-65	-45.8
Sep-65	-49.5
Oct-65	-44.6
Nov-65	-42
Dec-65	-30.6
Jan-66	-26
Feb-66	-24.9
Mar-66	-26.5
Apr-66	-28.8
May-66	-32.2
Jun-66	-43
Jul-66	-48.9
Aug-66	-46.8
Sep-66	-49.5
Oct-66	-45.4
Nov-66	-40.2
Dec-66	-30.1
Jan-67	-24.5
Feb-67	-21.8
Mar-67	-21.7
Apr-67	-20.4
May-67	-16.5
Jun-67	-23.2
Jul-67	-29.8
Aug-67	-41.6
Sep-67	-43.4
Oct-67	-34.5
Nov-67	-35.4
Dec-67	-30.5
Jan-68	-26.9
Feb-68	-24.4
Mar-68	-25
Apr-68	-25.5
May-68	-37.2
Jun-68	-40.9
Jul-68	-40.6
Aug-68	-46.3
Sep-68	-51.3

WATER CONSERVATION – SUMMARY – GROUND WATER

GROUND WATER FLUCTUATION:

Location: Coastal Plain, City of Long Beach **Ground Surface Elevation: 26.6 ft above MSL**

STATION	460K
	WS Elev.
Oct-68	-46.6
Nov-68	-38.5
Dec-68	-34.1
Jan-69	-30.4
Feb-69	-25.8
Mar-69	-26
Apr-69	-26
May-69	-33.9
Jun-69	-42.4
Jul-69	-47.7
Aug-69	-49.1
Sep-69	-51.7
Oct-69	-57
Nov-69	-44.7
Dec-69	-39.2
Jan-70	-34.6
Feb-70	-29.4
Mar-70	-27.1
Apr-70	-31
May-70	-34.5
Jun-70	-39.2
Jul-70	-38.4
Aug-70	-40
Sep-70	-43.7
Oct-70	-52.5
Nov-70	-50.8
Dec-70	-39.5
Jan-71	-31.7
Feb-71	-30
Mar-71	-32.8
Apr-71	-37.8
May-71	-38.2
Jun-71	-39.9
Jul-71	-51
Aug-71	-52.2
Sep-71	-50.1
Oct-71	-54.7
Nov-71	-57
Dec-71	-46.3
Jan-72	-34.2
Feb-72	-32.3
Mar-72	-34.3
Apr-72	-40.5
May-72	-44.5
Jun-72	-59.5

WATER CONSERVATION – SUMMARY – GROUND WATER

GROUND WATER FLUCTUATION:

Location: Coastal Plain, City of Long Beach **Ground Surface Elevation: 26.6 ft above MSL**

STATION	460K
	WS Elev.
Jul-72	-53.5
Aug-72	-64.5
Sep-72	-73.3
Oct-72	-69.2
Nov-72	-60.8
Dec-72	-46.3
Jan-73	-40.2
Feb-73	-38.8
Mar-73	-33.8
Apr-73	-37.9
May-73	-49.5
Jun-73	-59.8
Jul-73	-68.3
Aug-73	-71.1
Sep-73	-69.7
Oct-73	-69.4
Nov-73	-67.5
Dec-73	-52.9
Jan-74	-54.7
Feb-74	-51.7
Mar-74	-54.4
Apr-74	-50.6
May-74	-62.7
Jun-74	-63.9
Jul-74	-69.7
Aug-74	-73.6
Sep-74	-73.6
Oct-74	-76.3
Nov-74	-71.7
Dec-74	-68.8
Jan-75	-58.1
Feb-75	-55.5
Mar-75	-48.1
Apr-75	-45.9
May-75	-47.1
Jun-75	-58.9
Jul-75	-70
Aug-75	-74.7
Sep-75	-71.1
Oct-75	-78.3
Nov-75	-75
Dec-75	-72.8
Jan-76	-70
Feb-76	-66.8
Mar-76	-66.1

WATER CONSERVATION – SUMMARY – GROUND WATER

GROUND WATER FLUCTUATION:

Location: Coastal Plain, City of Long Beach **Ground Surface Elevation: 26.6 ft above MSL**

STATION	460K
	WS Elev.
Apr-76	-69.4
May-76	-70.5
Jun-76	-76.6
Jul-76	-85.4
Aug-76	-85.7
Sep-76	-88
Oct-76	-77.7
Nov-76	-84.2
Dec-76	-78.9
Jan-77	-74.2
Feb-77	-67.2
Mar-77	-66.8
Apr-77	-74.6
May-77	-84.7
Jun-77	-78.9
Jul-77	-88.7
Aug-77	-92.1
Sep-77	-90.4
Oct-77	-90.2
Nov-77	-87.8
Dec-77	-85.2
Jan-78	-78.8
Feb-78	-65.4
Mar-78	-64.1
Apr-78	-63.4
May-78	-50.4
Jun-78	-63.2
Jul-78	-82.8
Aug-78	-80.9
Sep-78	-83.6
Oct-78	-85.1
Nov-78	-76.1
Dec-78	-66.7
Jan-79	-62
Feb-79	-53.6
Mar-79	-43.5
Apr-79	-42.6
May-79	-53.6
Jun-79	-62.9
Jul-79	-77.1
Aug-79	-85.8
Sep-79	-89.5
Oct-79	-85.2
Nov-79	-83.5
Dec-79	-83.7

WATER CONSERVATION – SUMMARY – GROUND WATER

GROUND WATER FLUCTUATION:

Location: Coastal Plain, City of Long Beach **Ground Surface Elevation: 26.6 ft above MSL**

STATION	460K
	WS Elev.
Jan-80	-66.8
Feb-80	-57.5
Mar-80	-55.9
Apr-80	-58.9
May-80	-59.1
Jun-80	-69.1
Jul-80	-79.4
Aug-80	-84.9
Sep-80	-86.3
Oct-80	-82.5
Nov-80	-80.3
Dec-80	-77.5
Jan-81	-63.4
Feb-81	-52.1
Mar-81	-49.6
Apr-81	-48.8
May-81	-64.4
Jun-81	-69.1
Aug-81	-72.5
Sep-81	-79
Nov-81	-64.8
Dec-81	-71.8
Jan-82	-45.1
Feb-82	-49.7
Mar-82	-52.3
Apr-82	-59
Jul-82	-69
Aug-82	-74.2
Sep-82	-73.8
Nov-82	-68
Dec-82	-61.5
Jan-83	-51.6
Feb-83	-52.7
Mar-83	-49.3
Apr-83	-47.8
May-83	-57.5
Jun-83	-63.7
Jul-83	-66.7
Aug-83	-66.7
Sep-83	-53.3
Oct-83	-46.3
Nov-83	-45.5
Dec-83	-21.7
Jan-84	-19.1
Feb-84	-17.5

WATER CONSERVATION – SUMMARY – GROUND WATER

GROUND WATER FLUCTUATION:

Location: Coastal Plain, City of Long Beach **Ground Surface Elevation: 26.6 ft above MSL**

STATION	460K
	WS Elev.
Mar-84	-21.4
Apr-84	-24.6
May-84	-48
Jun-84	-58.7
Jul-84	-58.7
Aug-84	-61.9
Sep-84	-66.7
Oct-84	-62.4
Nov-84	-53.2
Dec-84	-44.3
Jan-85	-35.3
May-85	-40.4
Jun-85	-44.8
Jul-85	-56
Aug-85	-59.9
Sep-85	-59.1
Oct-85	-48.8
Nov-85	-49.3
Dec-85	-42.9
Jan-86	-38.5
Mar-86	-38.7
Apr-86	-43.8
May-86	-44.1
Jun-86	-56.9
Jul-86	-54.3
Aug-86	-66.8
Sep-86	-58.1
Oct-86	-52.3
Nov-86	-43.6
Dec-86	-43.6
Jan-87	-45.6
Feb-87	-44.6
Apr-87	-45.4
May-87	-48.4
Jun-87	-41
Jul-87	-63.6
Aug-87	-50.4
Sep-87	-61.5
Oct-87	-62.7
Nov-87	-63.2
Dec-87	-47.7
Jan-88	-47.2
Feb-88	-49.7
Mar-88	-49
Apr-88	-56.5

WATER CONSERVATION – SUMMARY – GROUND WATER

GROUND WATER FLUCTUATION:

Location: Coastal Plain, City of Long Beach **Ground Surface Elevation: 26.6 ft above MSL**

STATION	460K
	WS Elev.
May-88	-62.5
Jun-88	-62.5
Jul-88	-77
Aug-88	-77.5
Sep-88	-78.8
Oct-88	-73.1
Nov-88	-73.1
Dec-88	-66.2
Jan-89	-55.1
Feb-89	-63.2
Mar-89	-71.9
Apr-89	-71
May-89	-77
Jun-89	-76.2
Jul-89	-78.7
Aug-89	-76
Sep-89	-87.8
Oct-89	-73.4
Nov-89	-54.2
Dec-89	-56.7
Jan-90	-49.2
Feb-90	-44.9
Mar-90	-45.1
Apr-90	-36
May-90	-55.9
Jun-90	-89.9
Jul-90	-97.2
Aug-90	-98.7
Sep-90	-99.5
Oct-90	-91.5
Nov-90	-48.3
Dec-90	-34.8
Jan-91	-33.3
Feb-91	-42.4
Mar-91	-46.1
Apr-91	-26
May-91	-78.3
Jun-91	-90.2
Jul-91	-80.4
Aug-91	-77.5
Sep-91	-63.4
Oct-91	-62.7
Nov-91	-63.4
Dec-91	-60.9
Jan-92	-55.4

WATER CONSERVATION – SUMMARY – GROUND WATER

GROUND WATER FLUCTUATION:

Location: Coastal Plain, City of Long Beach **Ground Surface Elevation: 26.6 ft above MSL**

STATION	460K
	WS Elev.
Feb-92	-50.6
Mar-92	-28.2
Apr-92	-46.7
May-92	-62.9
Sep-92	-73.5
Oct-92	-72
Nov-92	-78.8
Dec-92	-76.5
Jan-93	-70.4
Feb-93	-68.5
Mar-93	-65.9
Apr-93	-51.9
May-93	-37.9
Jun-93	-27.6
Jul-93	-21.2
Aug-93	-19.2
Sep-93	-19.9
Oct-93	-17.4
Nov-93	-19.4
Dec-93	-13.9
Jan-94	-10.9
Feb-94	-16.7
Mar-94	-9.4
Apr-94	-5.8
May-94	-22.6
Jun-94	-48.4
Jul-94	-54.7
Aug-94	-55.6
Sep-94	-64.2
Oct-94	-35.9
Nov-94	-27.4
Dec-94	-25.3
Jan-95	-20.9
Feb-95	-35.3
Mar-95	-26.7
Apr-95	-32.2
May-95	-18.8
Jun-95	-42.8
Jul-95	-57.2
Aug-95	-50.2
Sep-95	-62.5
Oct-95	-31.6
Nov-95	-19.4
Dec-95	-25.4
Jan-96	-18.6

WATER CONSERVATION – SUMMARY – GROUND WATER

GROUND WATER FLUCTUATION:

Location: Coastal Plain, City of Long Beach **Ground Surface Elevation: 26.6 ft above MSL**

STATION	460K
	WS Elev.
Feb-96	-10.3
Mar-96	-11.6
Apr-96	-5.8
May-96	-37.4
Jun-96	-51.8
Jul-96	-62.6
Aug-96	-64.8
Sep-96	-78.9
Oct-96	-70.4
Nov-96	-70.4
Dec-96	-70.4
Jan-97	-8.1
Feb-97	-6.4
Mar-97	-7.8
Apr-97	-44.4
May-97	-74.4
Jun-97	-93.2
Jul-97	-98.8
Aug-97	-101.2
Sep-97	-103.4
Oct-97	-57.1
Nov-97	-45.2
Dec-97	-29.1
Jan-98	-20.2
Feb-98	-24.4
Mar-98	-11.8
Apr-98	-8.1
May-98	-58.5
Jun-98	-86.1
Jul-98	-95.6
Aug-98	-111.5
Sep-98	-113.3
Oct-98	-61.3
Nov-98	-42.2
Dec-98	-21.8
Jan-99	-22.9
Feb-99	-32.2
Mar-99	-14.5
Apr-99	-15.4
May-99	-70.4
Jun-99	-88.4
Jul-99	-96.4
Sep-99	-107.4
Oct-99	-48.9
Nov-99	-35.9

WATER CONSERVATION – SUMMARY – GROUND WATER

GROUND WATER FLUCTUATION:

Location: Coastal Plain, City of Long Beach **Ground Surface Elevation: 26.6 ft above MSL**

STATION	460K
	WS Elev.
Jan-00	-29.3
Feb-00	-28
Mar-00	-19.9
Apr-00	-25
May-00	-81.2
Jun-00	-97.9
Jul-00	-102.7
Aug-00	-109
Sep-00	-109.4
Oct-00	-63.6
Nov-00	-45.2
Dec-00	-41.6
Jan-01	-38.4
Feb-01	-31.9
Mar-01	-30.3
Apr-01	-22.8
May-01	-85.2
Jun-01	-98.5
Jul-01	-104.9
Aug-01	-107.9
Sep-01	-110.3

WATER CONSERVATION – SUMMARY – GROUND WATER

GROUND WATER FLUCTUATION:

Location: Coastal Plain **Ground Surface Elevation: 50.0 ft above MSL**

STATION	1346D	1366C	760C
	WS Elev.	WS Elev.	WS Elev.
Feb-57	-83.3		
Mar-57	-92.3		
Apr-57	-92.3		
Aug-57	-85.3		
Sep-57	-89.3		
Oct-57	-92.3		
Nov-57	-91.3		
Dec-57	-89.3		
Jan-58	-89.3		
Feb-58	-88.3		
Mar-58	-88.3		
Apr-58	-87.3		
May-58	-86.3		
Jun-58	-87.3		
Jul-58	-87.3		
Aug-58	-88.3		
Sep-58	-88.3		
Oct-58	-88.3		
Nov-58	-89.3		
Dec-58	-89.3		
Jan-59	-89.3		
Feb-59	-89.3		
Mar-59	-77.3		
Apr-59	-75.3		
May-59	-86.3		
Jun-59	-89.3		
Jul-59	-93.3		
Aug-59	-96.3		
Sep-59	-90.3		
Oct-59	-87.3		
Nov-59	-88.3		
Dec-59	-91.3		
Jan-60	-81.3		
Feb-60	-74.3		
Mar-60	-71.3		
Apr-60	-71.3		
May-60	-83.3		
Jun-60	-93.3		
Jul-60	-95.3		
Aug-60	-94.3		
Sep-60	-91.3		
Oct-60	-88.3		
Nov-60	-87.3		
Dec-60	-82.3		
Jan-61	-74.3		

WATER CONSERVATION – SUMMARY – GROUND WATER

GROUND WATER FLUCTUATION:

Location: Coastal Plain **Ground Surface Elevation: 50.0 ft above MSL**

STATION	1346D	1366C	760C
	WS Elev.	WS Elev.	WS Elev.
Feb-61	-75.3		
Mar-61	-72.3		
Apr-61	-72.3		
May-61	-81.3		
Jun-61	-61.8		
Jul-61	-62.3		
Aug-61	-82.3		
Sep-61	-86.3		
Oct-61	-87.3		
Nov-61	-88.3		
Dec-61	-88.3		
Jan-62	-73.3		
Feb-62	-73.3		
Mar-62	-69.3		
Apr-62	-69.3		
May-62	-76.1		
Jun-62	-80.3		
Jul-62	-80.9		
Aug-62	-84.7		
Sep-62	-88		
Oct-62	-87.7		
Nov-62	-87.7		
Dec-62	-88.3		
Feb-63	-78.1		
Mar-63	-77.3		
Apr-63	-77.2		
May-63	-78.7		
Jun-63	-83.1		
Jul-63	-81.6		
Aug-63	-82		
Sep-63	-80.6		
Oct-63	-80.7		
Nov-63	-80.3		
Dec-63	-81.3		
Jan-64	-78.8		-54
Feb-64	-77.5		-58
Mar-64	-78.4		-55
Apr-64	-80.4		-54
May-64	-84.8		-64
Jun-64	-89.4		-64
Jul-64	-93.1		-59
Aug-64	-90		-61
Sep-64	-88.5		-59
Oct-64	-87.6		-64
Nov-64	-91.2		-60.7

WATER CONSERVATION – SUMMARY – GROUND WATER

GROUND WATER FLUCTUATION:

Location: Coastal Plain **Ground Surface Elevation: 50.0 ft above MSL**

STATION	1346D	1366C	760C
	WS Elev.	WS Elev.	WS Elev.
Dec-64	-77.6		-54
Jan-65	-80.2		-66
Feb-65	-73.3		-57.2
Mar-65	-73		-54
Apr-65	-73.2		-52.2
May-65	-76.5		-57
Jun-65	-80		-55
Jul-65	-83.5		-53
Aug-65	-89.8		-62
Sep-65	-91.1		-58
Oct-65	-86.1		-60
Nov-65	-87.1		-57
Dec-65	-77.1		-50.2
Jan-66	-77.7		-50
Feb-66	-79.2		-53
Mar-66	-79.1		-52
Apr-66	-80.9		-51
May-66	-90.1		-50
Jun-66	-91		-55
Jul-66	-94.6		-57
Aug-66	-88.7		-53
Sep-66	-85.3		-53
Oct-66	-88		-57
Nov-66	-80.6		-49
Dec-66	-75.9		-50
Jan-67	-74.2		-48
Feb-67	-72.2		-50
Mar-67	-72.9		-45.7
Apr-67	-70.8		-48
May-67	-73.2		-49
Jun-67	-82		-62
Jul-67	-85.9		-63
Aug-67	-87.9		-51.2
Sep-67	-88.4		-48
Oct-67	-88.3		-47.2
Nov-67	-84.9		-47.2
Dec-67	-81.1		-48.2
Jan-68	-76		-49
Feb-68	-73		-49
Mar-68	-71.2		-46
Apr-68	-73.8		-45.2
May-68	-73.9		-45
Jun-68	-80.6		-45
Jul-68	-83		-44
Aug-68	-83.7		-45

WATER CONSERVATION – SUMMARY – GROUND WATER

GROUND WATER FLUCTUATION:

Location: Coastal Plain **Ground Surface Elevation: 50.0 ft above MSL**

STATION	1346D	1366C	760C
	WS Elev.	WS Elev.	WS Elev.
Sep-68	-83.1		-45
Oct-68	-75.9		-41.7
Nov-68	-74		-42.2
Dec-68	-73.2		-43.2
Jan-69	-71.9		-44
Feb-69	-74.9		-44
Mar-69	-68.7		-44
Apr-69	-71.5		-40
May-69	-69.8		-45
Jun-69	-72.4		-49
Jul-69	-76.2		-50
Aug-69	-82.6		-50
Sep-69	-83.7		-52
Oct-69	-87.3		-43
Nov-69	-82		-43
Dec-69	-73.5		-43
Jan-70	-68.3		-42
Feb-70	-71.1		-39
Mar-70	-69		-38.2
Apr-70	-74.8		-39.3
May-70	-74.8		-42
Jun-70	-78.5		-40
Jul-70	-86		-40
Aug-70	-83.1		-41
Sep-70	-83.2		-44
Oct-70	-84.5		-43
Nov-70	-84		-41.2
Dec-70	-81		-41.2
Jan-71	-81.7		-43.2
Feb-71	-82.2		-38.2
Mar-71	-80.8		-42.2
Apr-71	-81.8		-36.2
May-71	-80		-37.2
Jun-71	-78.9		-44.2
Jul-71	-80		
Aug-71	-81.3		
Sep-71	-80.2		
Oct-71	-79.6		-42.2
Nov-71	-78.4		-40.2
Dec-71	-77.6		
Jan-72	-77.2		
Feb-72	-75.6		-41.2
Mar-72	-70.6		-41.2
Apr-72	-73.5		-40.2
May-72	-76.4		-38.2

WATER CONSERVATION – SUMMARY – GROUND WATER

GROUND WATER FLUCTUATION:

Location: Coastal Plain **Ground Surface Elevation: 50.0 ft above MSL**

STATION	1346D	1366C	760C
	WS Elev.	WS Elev.	WS Elev.
Jun-72	-73.2		-37.2
Jul-72	-72.3		-38.2
Aug-72	-72.7		-39.2
Sep-72	-76		-39.2
Oct-72	-78.4		
Nov-72	-78		
Dec-72	-74.7		
Jan-73	-76.3		-40.2
Feb-73	-75.4		-38.2
Mar-73	-74.2		-37.2
Apr-73	-70.7		-37.2
May-73	-71		
Jun-73	-68.5		
Jul-73	-69.4		
Aug-73	-70.4		-37.2
Sep-73	-69.9		
Oct-73	-68.9		-37.2
Dec-73	-60.9		
Jan-74	-60		
Feb-74	-58.2		-33.2
Mar-74	-57.7		-38.2
Apr-74	-57.2		-37.2
May-74	-56.9		-37.2
Jun-74	-59.2		-34.2
Jul-74	-61.4		-35.2
Aug-74	-63.9		-35.2
Sep-74	-70		-34.2
Oct-74	-62.1		-33.2
Nov-74	-69		-33.2
Dec-74	-63		-35.2
Jan-75	-63		-36.2
Feb-75	-61		-36.2
Mar-75	-59		-36.2
Apr-75	-58		-38.2
May-75	-52.5		
Jun-75	-53.9		-39.2
Jul-75	-58		-39.2
Aug-75	-62		-36.2
Sep-75	-63		-39.2
Oct-75	-62		-36.2
Nov-75	-57.5		-35.2
Dec-75	-62		-35.2
Jan-76	-62		-35.2
Feb-76	-62		-37.2
Mar-76	-63		-38.2

WATER CONSERVATION – SUMMARY – GROUND WATER

GROUND WATER FLUCTUATION:

Location: Coastal Plain **Ground Surface Elevation: 50.0 ft above MSL**

STATION	1346D	1366C	760C
	WS Elev.	WS Elev.	WS Elev.
Apr-76	-62		-42.2
May-76	-59		-37.2
Jun-76	-62		-37.2
Jul-76	-61		-37.2
Aug-76	-63		-37.2
Sep-76	-63		-37.2
Oct-76	-62		-35.2
Nov-76	-53.4		-36.1
Dec-76	-62		-33.2
Jan-77	-60		-32.2
Feb-77	-61		-32.2
Mar-77	-49		-32.2
Apr-77	-60		-32.2
May-77	-55		-34.2
Jun-77	-56		-34.2
Jul-77	-58		-37.2
Aug-77	-62		-37.2
Sep-77	-62		-37.2
Oct-77	-54.1		-35.4
Nov-77	-51.2		
Dec-77	-53.5		
Jan-78	-51.5		
Feb-78	-57.8		
Mar-78	-69.7		
Apr-78	-58.4		-32.2
May-78	-71.6		
Jun-78	-82.1		
Oct-78	-98.7		-33.2
Jan-79	-91.3		
Feb-79	-97.3		
Mar-79	-99.3		
Apr-79	-80.7		
May-79	-99.3		
Jun-79	-79.3		
Jul-79	-76.3		
Aug-79	-81.3		-43
Sep-79	-83.3		-40
Oct-79	-97.3		-36
Nov-79	-104		-36
Dec-79			-37
Jan-80			-34
Feb-80			-34
Mar-80			-34
Apr-80	-78.3		-42.2
May-80	-79.3		-34

WATER CONSERVATION – SUMMARY – GROUND WATER

GROUND WATER FLUCTUATION:

Location: Coastal Plain **Ground Surface Elevation: 50.0 ft above MSL**

STATION	1346D	1366C	760C
	WS Elev.	WS Elev.	WS Elev.
Jun-80	-79.3		-34
Jul-80	-79.3		-37
Aug-80	-91.3		-37
Sep-80	-89.3		-37
Oct-80	-93.3		-38
Nov-80	-92.3		-38
Dec-80	-89.3		-38
Jan-81	-77.3		-35
Feb-81	-73.3		-34
Mar-81	-79.3		-34
Apr-81	-79.3		-33.2
May-81	-81.3		-34
Jun-81	-79.3		
Jul-81	-78.3		-28
Aug-81	-77.3		-30
Sep-81	-79.3		-32
Oct-81	-87.3		-31.2
Nov-81	-91.3		-34
Dec-81	-93.3		-34
Jan-82	-97.3		-34
Feb-82	-96.3		-34
Mar-82	-95.3		-35
Apr-82	-97.3		-34.2
May-82	-97.3		-38
Jun-82	-98.3		
Jul-82	-101		-37
Aug-82	-87.3		-37
Sep-82	-83.3		-37
Oct-82	-83.3		-35.2
Nov-82	-90.3		-38
Dec-82	-85.3		-38
Jan-83	-80.3		-37
Feb-83	-87.3		-38
Mar-83	-90.3		-38
Apr-83	-85.3		-37
May-83	-83.3		-36.2
Jun-83	-91.3		-30.2
Jul-83	-89.3		-39.2
Aug-83	-91.3		
Sep-83	-83.3		
Oct-83	-91.3		-37.2
Nov-83	-89.3		-36.2
Dec-83	-79.3		-27.2
Jan-84	-68.3		-30.2
Feb-84	-63.3		-30.2

WATER CONSERVATION – SUMMARY – GROUND WATER

GROUND WATER FLUCTUATION:

Location: Coastal Plain **Ground Surface Elevation: 50.0 ft above MSL**

STATION	1346D	1366C	760C
	WS Elev.	WS Elev.	WS Elev.
Mar-84	-73.3		
Apr-84	-79.3		-27.2
May-84	-83.3		-29.2
Jun-84	-83.3		-29.2
Jul-84	-85.3		
Aug-84	-89.3		-32.2
Sep-84	-83.3		-31.2
Oct-84	-85.3		-31.2
Nov-84	-85.3		
Dec-84	-80.3		-30.2
Jan-85	-83.3		-31.2
Feb-85	-63.3		
Mar-85	-67.3		-31.2
Apr-85	-69.3		-31.2
May-85	-69.3		-31.2
Jun-85	-71.3		-27.2
Jul-85	-69.3		-26.2
Aug-85	-67.3		-22.2
Sep-85	-69.3		-24.2
Oct-85	-71.3		-24.2
Nov-85	-75.3		-33
Dec-85	-79.3		-34
Jan-86	-77.3		-24
Feb-86	-75.3		-22.5
Mar-86	-76.3		-23
Apr-86	-77.3		-25
May-86	-77.3		-26
Jun-86	-89.3		-24
Jul-86	-95.3		-31
Aug-86	-90.3		-32
Sep-86	-90.3		-31
Oct-86	-88.3		-29
Nov-86	-87.3		-36
Dec-86	-75.3		-27
Jan-87	-66.3		-25
Apr-87	-65.3		
May-87	-72.3		
Jun-87	-76.3		
Jul-87	-79.3		
Aug-87	-78.3		
Sep-87	-76.3		
Oct-87	-69.3		
Nov-87	-68.3		-25.6
Dec-87	-68.3		-27
Jan-88	-65.8		-25.8

WATER CONSERVATION – SUMMARY – GROUND WATER

GROUND WATER FLUCTUATION:

Location: Coastal Plain **Ground Surface Elevation: 50.0 ft above MSL**

STATION	1346D	1366C	760C
	WS Elev.	WS Elev.	WS Elev.
Feb-88	-66.1		-24.3
Mar-88	-59.1		
Apr-88	-57.6		-23.3
May-88	-55.3		-16.6
Jun-88	-52.3		-26.3
Jul-88	-52.3		-25
Aug-88	-51.3		-26.8
Sep-88	-51.3		-28
Oct-88	-52.4		-25
Nov-88	-51.3		-25
Dec-88	-49.3		-24
Jan-89	-52.3		-19
Feb-89			-23
Mar-89	-60.1		-24.8
Apr-89	-63.8		-26.3
May-89	-70.6		-25
Jun-89	-71.3		-24
Jul-89	-69.3		-30
Aug-89	-66.8		-24
Sep-89	-66.8		-24
Oct-89	-60.4		-24
Nov-89	-62.3		-27.2
Dec-89	-62.3		-24
Jan-90	-62.3		-22.2
Feb-90	-62.3		-23.2
Mar-90	-60.3		-23.2
Apr-90	-62.4		-26.2
May-90	-61.3		-23.2
Jun-90	-61.3		-24.2
Jul-90	-61.3		-21.2
Aug-90	-61.3		-24.2
Sep-90	-61.3		-26.2
Oct-90	-61.3		-24.2
Nov-90	-61.3		-23.2
Dec-90	-61.3		-21.2
Jan-91	-66.3		-17.2
Feb-91	-52.3		-17.2
Mar-91	-56.6		-24.2
Apr-91	-58.3		-23.2
May-91	-63.3		-24.2
Jun-91	-67.3		-25.2
Jul-91	-68.6		-28.2
Aug-91	-72.3		-28.2
Sep-91	-79.3	-61.7	-24.2
Oct-91	-80.3	-55.7	-25.2

WATER CONSERVATION – SUMMARY – GROUND WATER

GROUND WATER FLUCTUATION:

Location: Coastal Plain **Ground Surface Elevation: 50.0 ft above MSL**

STATION	1346D	1366C	760C
	WS Elev.	WS Elev.	WS Elev.
Nov-91	-80.8		-26.2
Dec-91			-28.2
Jan-92			-25.2
Feb-92	-68.3		-25.2
Mar-92	-80.3		-28.2
Apr-92	-86.8	-54.7	-27.2
May-92			-28.2
Jun-92			-26.2
Jul-92			-28.2
Aug-92			-28.2
Sep-92			-30.2
Oct-92		-41.7	-31.2
Nov-92			-22.2
Dec-92			-25.2
Jan-93			-23.2
Feb-93			-22.2
Mar-93			-25.2
Apr-93		-55.7	-25.2
May-93			-26.2
Jun-93		-96.2	-27.2
Jul-93			-30.2
Aug-93		-47.7	-25.2
Sep-93		-73.7	-23.2
Oct-93		-42	-25.2
Nov-93		-53.2	-16.2
Dec-93		-46	-17.2
Jan-94		-33.2	-14.2
Feb-94		-34.7	-17.2
Mar-94		-36.7	-16.2
Apr-94		-51.7	-18.2
May-94		-43.7	-21
Jun-94			-23.2
Jul-94		-57.7	-26.2
Aug-94		-58.7	-25.2
Sep-94		-27.7	-18.2
Oct-94		-44.7	-18.2
Nov-94			-18.2
Dec-94			-17.2
Jan-95			-17.2
Apr-95			-18.2
May-95			-19.2
Jun-95			-24.2
Jul-95			-23.2
Aug-95			-23.2
Oct-95			-16.7

WATER CONSERVATION – SUMMARY – GROUND WATER

GROUND WATER FLUCTUATION:

Location: Coastal Plain **Ground Surface Elevation: 50.0 ft above MSL**

STATION	1346D	1366C	760C
	WS Elev.	WS Elev.	WS Elev.
Apr-96			-24.2
Apr-97			-22.2
Oct-97			-18.2
Mar-98			-20.2
Jul-98			-22.2
Oct-98			-24.2
Nov-98			-23.2
Jan-99			-21.2
Apr-99			-24.2
May-99			-23.2
Aug-99			-27.2
Nov-99			-25.2
May-00			-28.2
Nov-00			-32
Mar-01			-34.2

WATER CONSERVATION – SUMMARY – GROUND WATER

GROUND WATER FLUCTUATION:

Location: Coastal Plain, City of Long Beach **Ground Surface Elevation: 88.8 ft above MSL**

STATION	906D
	WS Elev.
Jan-51	-42.1
Feb-51	-40.4
Mar-51	-41.7
Apr-51	-46.7
May-51	-48.5
Jun-51	-52
Jul-51	-59
Aug-51	-66.2
Sep-51	-70.4
Oct-51	-70.4
Nov-51	-69.6
Dec-51	-65.5
Jan-52	-59.2
Feb-52	-56.2
Mar-52	-54.1
Apr-52	-52.1
May-52	-49.2
Jun-52	-49.5
Jul-52	-53.5
Aug-52	-63.2
Sep-52	-68
Oct-52	-70.6
Nov-52	-70.1
Dec-52	-63.5
Jan-53	-51.2
Feb-53	-45.4
Mar-53	-47.6
Apr-53	-52.6
May-53	-50.6
Jun-53	-65.3
Jul-53	-73.1
Aug-53	-79.4
Sep-53	-81.8
Oct-53	-81.3
Nov-53	-76.5
Dec-53	-72.9
Jan-54	-67.7
Feb-54	-63
Mar-54	-56.9
Apr-54	-53.8
May-54	-53.3
Jun-54	-58.9
Jul-54	-65.4
Aug-54	-76.1
Sep-54	-82.6

WATER CONSERVATION – SUMMARY – GROUND WATER

GROUND WATER FLUCTUATION:

Location: Coastal Plain, City of Long Beach **Ground Surface Elevation: 88.8 ft above MSL**

STATION	906D
	WS Elev.
Oct-54	-83.8
Nov-54	-80.5
Dec-54	-73.3
Jan-55	-66.1
Feb-55	-62.2
Mar-55	-60.7
Apr-55	-59.4
May-55	-61.5
Jun-55	-64.2
Jul-55	-69.2
Aug-55	-75.8
Sep-55	-82
Oct-55	-85.6
Nov-55	-83.8
Dec-55	-79.9
Jan-56	-69
Feb-56	-66.7
Mar-56	-66.7
Apr-56	-72.5
May-56	-74.3
Jun-56	-100
Jul-56	-87.6
Aug-56	-92.1
Sep-56	-98.8
Oct-56	-101.5
Nov-56	-102.5
Dec-56	-103
Jan-57	-99.9
Feb-57	-89.7
Mar-57	-80.8
Apr-57	-75
May-57	-83.5
Jun-57	-84.7
Jul-57	-96.7
Aug-57	-103
Sep-57	-106.7
Oct-57	-107.6
Nov-57	-101.2
Dec-57	-97
Jan-58	-90.2
Feb-58	-87.7
Mar-58	-82.9
Apr-58	-77.5
May-58	-81.5
Jun-58	-87.6

WATER CONSERVATION – SUMMARY – GROUND WATER

GROUND WATER FLUCTUATION:

Location: Coastal Plain, City of Long Beach **Ground Surface Elevation: 88.8 ft above MSL**

STATION	906D
	WS Elev.
Jul-58	-94.8
Aug-58	-98.3
Sep-58	-98.7
Oct-58	-100
Nov-58	-98.2
Dec-58	-93.1
Jan-59	-89
Feb-59	-83.3
Mar-59	-85.4
Apr-59	-86.1
May-59	-86.6
Jun-59	-89.2
Jul-59	-92.7
Aug-59	-97.4
Sep-59	-101
Oct-59	-104.4
Nov-59	-104.5
Dec-59	-104.8
Jan-60	-101.4
Feb-60	-96.8
Mar-60	-96.6
Apr-60	-95.2
May-60	-90.8
Jun-60	-87.6
Jul-60	-91.8
Aug-60	-104.2
Sep-60	-92.5
Oct-60	-106.9
Nov-60	-108
Dec-60	-99.4
Jan-61	-94.2
Feb-61	-90.8
Mar-61	-92.8
Apr-61	-94.9
May-61	-90.8
Jun-61	-111.3
Jul-61	-119.2
Aug-61	-125.6
Sep-61	-128.7
Oct-61	-124.9
Nov-61	-118.6
Dec-61	-109.5
Jan-62	-100.6
Feb-62	-94.3
Mar-62	-88.7

WATER CONSERVATION – SUMMARY – GROUND WATER

GROUND WATER FLUCTUATION:

Location: Coastal Plain, City of Long Beach **Ground Surface Elevation: 88.8 ft above MSL**

STATION	906D
	WS Elev.
Apr-62	-87.6
May-62	-97.3
Jun-62	-103.5
Jul-62	-107.3
Aug-62	-116.6
Sep-62	-121.4
Oct-62	-117.4
Nov-62	-97.6
Dec-62	-83.7
Jan-63	-74.6
Feb-63	-68.6
Mar-63	-65.3
Apr-63	-62.9
May-63	-58
Jun-63	-60.6
Jul-63	-61.3
Aug-63	-79.2
Sep-63	-82.8
Oct-63	-74.4
Nov-63	-63.5
Dec-63	-57.3
Jan-64	-53.2
Feb-64	-51.3
Mar-64	-47.1
Apr-64	-45.6
May-64	-45.8
Jun-64	-45.9
Jul-64	-54.1
Aug-64	-63.4
Sep-64	-78.1
Oct-64	-68.9
Nov-64	-56.9
Dec-64	-56.9
Jan-65	-52.2
Feb-65	-50.7
Mar-65	-49.7
Apr-65	-49.4
May-65	-48.3
Jun-65	-50.7
Jul-65	-54.9
Aug-65	-56.7
Sep-65	-62.5
Oct-65	-60.1
Nov-65	-61.2
Dec-65	-59.2

WATER CONSERVATION – SUMMARY – GROUND WATER

GROUND WATER FLUCTUATION:

Location: Coastal Plain, City of Long Beach **Ground Surface Elevation: 88.8 ft above MSL**

STATION	906D
	WS Elev.
Jan-66	-53.3
Feb-66	-49.9
Mar-66	-42.6
Apr-66	-43.2
May-66	-46.8
Jun-66	-52.3
Jul-66	-59.2
Aug-66	-69.1
Sep-66	-69.4
Oct-66	-69.4
Nov-66	-60.2
Dec-66	-53.6
Jan-67	-49.3
Feb-67	-44.8
Mar-67	-42.3
Apr-67	-40.7
May-67	-38.4
Jun-67	-38.8
Jul-67	-40.6
Aug-67	-46.7
Sep-67	-56
Oct-67	-52
Nov-67	-50.7
Dec-67	-45.8
Jan-68	-34.3
Feb-68	-37
Mar-68	-40.8
Apr-68	-38.7
May-68	-42.3
Jun-68	-49.4
Jul-68	-53.1
Aug-68	-65.5
Sep-68	-71
Oct-68	-63.6
Nov-68	-60.1
Dec-68	-54.7
Jan-69	-49.6
Feb-69	-47.2
Mar-69	-43.8
Apr-69	-34.9
May-69	-42.3
Jun-69	-48.9
Jul-69	-56.4
Aug-69	-66.1
Sep-69	-75.7

WATER CONSERVATION – SUMMARY – GROUND WATER

GROUND WATER FLUCTUATION:

Location: Coastal Plain, City of Long Beach **Ground Surface Elevation: 88.8 ft above MSL**

STATION	906D
	WS Elev.
Oct-69	-74
Nov-69	-68.9
Dec-69	-65.1
Jan-70	-55.8
Feb-70	-39
Mar-70	-29.1
Apr-70	-26.9
May-70	-30.8
Jun-70	-33.1
Jul-70	-32
Aug-70	-34
Sep-70	-52.7
Oct-70	-57.6
Nov-70	-50.5
Dec-70	-41.9
Jan-71	-33.5
Feb-71	-31.6
Mar-71	-32.8
Apr-71	-36.1
May-71	-36.8
Jun-71	-39.6
Jul-71	-46.8
Aug-71	-55.6
Sep-71	-63.8
Oct-71	-62.7
Nov-71	-60.8
Dec-71	-53.3
Jan-72	-48.9
Feb-72	-36
Mar-72	-30.5
Apr-72	-31.8
May-72	-32.3
Jun-72	-40.4
Jul-72	-47.8
Aug-72	-59.9
Sep-72	-68.2
Oct-72	-66.9
Nov-72	-59.2
Dec-72	-47.7
Jan-73	-41.9
Feb-73	-36.4
Mar-73	-30.5
Apr-73	-28.3
May-73	-32.7
Jun-73	-44.6

WATER CONSERVATION – SUMMARY – GROUND WATER

GROUND WATER FLUCTUATION:

Location: Coastal Plain, City of Long Beach **Ground Surface Elevation: 88.8 ft above MSL**

STATION	906D
	WS Elev.
Jul-73	-55.5
Aug-73	-59.5
Sep-73	-63.7
Oct-73	-62.7
Nov-73	-60.6
Dec-73	-54.7
Jan-74	-49
Feb-74	-44.4
Mar-74	-43
Apr-74	-40.7
May-74	-43.6
Jun-74	-47.3
Jul-74	-50.2
Aug-74	-55
Sep-74	-57.5
Oct-74	-59.7
Nov-74	-59.3
Dec-74	-55.1
Jan-75	-48.1
Feb-75	-46
Mar-75	-41.9
Apr-75	-39.7
May-75	-36.4
Jun-75	-38.4
Jul-75	-44.4
Aug-75	-57.9
Sep-75	-63.5
Oct-75	-66.6
Nov-75	-67.4
Dec-75	-65
Jan-76	-62.9
Feb-76	-64.2
Mar-76	-61.5
Apr-76	-60.7
May-76	-61.3
Jun-76	-65.1
Jul-76	-75.7
Aug-76	-77.5
Sep-76	-81.6
Oct-76	-80.4
Nov-76	-83.2
Dec-76	-82.8
Jan-77	-80.4
Feb-77	-74.5
Mar-77	-71.4

WATER CONSERVATION – SUMMARY – GROUND WATER

GROUND WATER FLUCTUATION:

Location: Coastal Plain, City of Long Beach **Ground Surface Elevation: 88.8 ft above MSL**

STATION	906D
	WS Elev.
Apr-77	-72.7
May-77	-77.8
Jun-77	-71.3
Jul-77	-79.6
Aug-77	-90.3
Sep-77	-89.9
Oct-77	-90.7
Nov-77	-88.6
Dec-77	-79.4
Jan-78	-81.1
Feb-78	-71.5
Mar-78	-64.2
Apr-78	-57
May-78	-57.3
Jun-78	-63
Jul-78	-70.4
Aug-78	-81.7
Sep-78	-88.8
Oct-78	-91.7
Nov-78	-83.4
Dec-78	-77.3
Jan-79	-68.1
Feb-79	-59.2
Mar-79	-53.2
Apr-79	-48.5
May-79	-51.3
Jun-79	-57.3
Jul-79	-71.2
Aug-79	-81.8
Sep-79	-89.4
Oct-79	-88.3
Nov-79	-86.8
Dec-79	-88.3
Jan-80	-77.1
Feb-80	-66.9
Mar-80	-60.4
Apr-80	-58.1
May-80	-56.1
Jun-80	-59.4
Jul-80	-71.9
Aug-80	-81.1
Sep-80	-87.8
Oct-80	-89.4
Nov-80	-90.2
Dec-80	-89.8

WATER CONSERVATION – SUMMARY – GROUND WATER

GROUND WATER FLUCTUATION:

Location: Coastal Plain, City of Long Beach **Ground Surface Elevation: 88.8 ft above MSL**

STATION	906D
	WS Elev.
Jan-81	-79.5
Feb-81	-58.6
Mar-81	-51.1
Apr-81	-51.3
May-81	-50.1
Jun-81	-54.4
Jul-81	-61.5
Aug-81	-67.4
Sep-81	-80.6
Oct-81	-77.6
Nov-81	-73.4
Dec-81	-64.9
Jan-82	-63.2
Feb-82	-45.5
Mar-82	-45.5
Apr-82	-45.6
May-82	-47.2
Jun-82	-48
Jul-82	-59.3
Aug-82	-73.6
Sep-82	-76.3
Oct-82	-75.3
Dec-82	-60.8
Jan-83	-52.7
Feb-83	-51.2
Mar-83	-43.8
Apr-83	-45.9
May-83	-44.9
Jun-83	-53.9
Jul-83	-53.9
Aug-83	-59.3
Sep-83	-48.3
Oct-83	-48.5
Nov-83	-35.8
Dec-83	-25.7
Jan-84	-9.8
Feb-84	-16.2
Mar-84	-10.9
Apr-84	-22.8
May-84	-28.3
Jun-84	-39.5
Jul-84	-48.2
Aug-84	-50.8
Sep-84	-55
Oct-84	-54.5

WATER CONSERVATION – SUMMARY – GROUND WATER

GROUND WATER FLUCTUATION:

Location: Coastal Plain, City of Long Beach **Ground Surface Elevation: 88.8 ft above MSL**

STATION	906D
	WS Elev.
Nov-84	-50.9
Dec-84	-42.6
Jan-85	-32.8
May-85	-34.2
Jun-85	-39.6
Jul-85	-45.5
Aug-85	-48.8
Sep-85	-47.7
Oct-85	-47.2
Nov-85	-46.3
Dec-85	-43.2
Jan-86	-30.4
Mar-86	-27.7
Apr-86	-35.7
May-86	-37.6
Jun-86	-40.2
Jul-86	-46
Aug-86	-50.5
Sep-86	-54.8
Oct-86	-51.2
Nov-86	-49.2
Dec-86	-48.5
Jan-87	-45.5
Feb-87	-40.1
Mar-87	-34.8
Apr-87	-39.2
May-87	-41.1
Jun-87	-41.7
Jul-87	-43.5
Aug-87	-49.3
Sep-87	-52
Oct-87	-54.6
Nov-87	-52.6
Dec-87	-49.8
Jan-88	-41.6
Feb-88	-37.8
Mar-88	-38
Apr-88	-41.7
May-88	-45.4
Jun-88	-45.4
Jul-88	-53.6
Aug-88	-63.1
Sep-88	-63.8
Oct-88	-64
Nov-88	-64

WATER CONSERVATION – SUMMARY – GROUND WATER

GROUND WATER FLUCTUATION:

Location: Coastal Plain, City of Long Beach **Ground Surface Elevation: 88.8 ft above MSL**

STATION	906D
	WS Elev.
Dec-88	-73.4
Jan-89	-57.4
Feb-89	-56.6
Mar-89	-59
Apr-89	-58.9
May-89	-61
Jun-89	-61
Jul-89	-71
Aug-89	-65
Sep-89	-67.5
Oct-89	-65
Nov-89	-52.9
Dec-89	-49
Jan-90	-47.1
Feb-90	-45.8
Mar-90	-47.4
Apr-90	-36.1
May-90	-35.9
Jun-90	-57.1
Jul-90	-65.7
Aug-90	-75.5
Sep-90	-71.3
Oct-90	-70.8
Nov-90	-55.9
Dec-90	-39.2
Jan-91	-29.2
Feb-91	-32.2
Mar-91	-32.1
Apr-91	-58.2
May-91	-30
Jun-91	-61.1
Jul-91	-65.3
Aug-91	-61.5
Oct-91	-61.5
Nov-91	-54.5
Dec-91	-49.6
Jan-92	-41.1
Feb-92	-43
Mar-92	-36.4
Apr-92	-34.8
May-92	-38.6
Jun-92	-48.4
Jul-92	-57.3
Aug-92	-60.8
Sep-92	-54

WATER CONSERVATION – SUMMARY – GROUND WATER

GROUND WATER FLUCTUATION:

Location: Coastal Plain, City of Long Beach **Ground Surface Elevation: 88.8 ft above MSL**

STATION	906D
	WS Elev.
Oct-92	-51.5
Nov-92	-56.8
Dec-92	-59.2
Jan-93	-58.3
Feb-93	-58.2
Mar-93	-56.6
Apr-93	-30.4
May-93	-47
Jun-93	-34.6
Jul-93	-25.3
Aug-93	-17.7
Sep-93	-16.7
Oct-93	-14.8
Nov-93	-13.2
Dec-93	-8.7
Jan-94	-5.4
Feb-94	-8.5
Mar-94	-2
Apr-94	-0.5
Jun-94	-22.8
Jul-94	-37.7
Aug-94	-42.4
Sep-94	-48.1
Oct-94	-41.3
Nov-94	-26.5
Dec-94	-15.6
Jan-95	-13.2
Feb-95	-19.3
Mar-95	-21.2
Apr-95	-23.1
May-95	-27.3
Jun-95	-23.4
Jul-95	-30.2
Aug-95	-33
Sep-95	-35.9
Oct-95	-31.4
Nov-95	-19.5
Dec-95	-12.7
Jan-96	-8.9
Feb-96	-6.1
Mar-96	-0.7
Apr-96	8.2
May-96	-7.1
Jun-96	-19.7
Jul-96	-30.8

WATER CONSERVATION – SUMMARY – GROUND WATER

GROUND WATER FLUCTUATION:

Location: Coastal Plain, City of Long Beach **Ground Surface Elevation: 88.8 ft above MSL**

STATION	906D
	WS Elev.
Aug-96	-41
Sep-96	-49
Oct-96	-38
Nov-96	-22.2
Dec-96	-48.2
Jan-97	-5.4
Feb-97	-1.4
Mar-97	3.2
Apr-97	-2.1
May-97	-33.2
Jun-97	-52
Jul-97	-66.2
Aug-97	-73.7
Sep-97	-80.7
Oct-97	-65.4
Nov-97	-53.5
Dec-97	-36.5
Jan-98	-28
Feb-98	-19.2
Mar-98	-11.4
Apr-98	-6.5
May-98	-15.2
Jun-98	-45.8
Jul-98	-56.5
Aug-98	-71
Sep-98	-74.6
Oct-98	-67.4
Nov-98	-50.7
Dec-98	-30.2
Feb-99	-17.2
Mar-99	-11.2
Apr-99	-7
May-99	-20.7
Jun-99	-43.2
Jul-99	-63.7
Sep-99	-80.8
Oct-99	-58.2
Nov-99	-43.5
Dec-99	-38.7
Jan-00	-30.3
Feb-00	-5.4
Mar-00	-16
Apr-00	-11.2
May-00	-29.4
Jun-00	-57

WATER CONSERVATION – SUMMARY – GROUND WATER

GROUND WATER FLUCTUATION:

Location: Coastal Plain, City of Long Beach **Ground Surface Elevation: 88.8 ft above MSL**

STATION	906D
	WS Elev.
Jul-00	-67.2
Aug-00	-78.3
Sep-00	-86
Oct-00	-67.7
Nov-00	-54.7
Dec-00	-44.7
Jan-01	-36.1
Feb-01	-34.8
Mar-01	-29.2
Apr-01	-22.5
May-01	-42.2
Jun-01	-66.3
Jul-01	-71.8
Aug-01	-78.9
Sep-01	-84.8

WATER CONSERVATION – SUMMARY – GROUND WATER

GROUND WATER FLUCTUATION:

Location: Central Basin **Ground Surface Elevation: 159.7 ft above MSL**

STATION	1601T
	WS Elev.
Jul-64	91.8
Aug-64	89
Sep-64	80
Oct-64	75
Nov-64	75.5
Dec-64	84.3
Jan-65	109.2
Feb-65	102.8
Mar-65	105.4
Apr-65	110
May-65	109.6
Jun-65	115.2
Jul-65	114.3
Aug-65	110.4
Sep-65	102
Oct-65	98.5
Nov-65	101.6
Dec-65	104.4
Jan-66	109.2
Feb-66	114.3
Mar-66	116.9
Apr-66	118.1
May-66	120.8
Jun-66	120.8
Jul-66	118.7
Aug-66	112.2
Sep-66	109
Oct-66	112
Nov-66	115.8
Dec-66	115.7
Jan-67	120.9
Feb-67	120.4
Mar-67	120.4
Apr-67	120.4
May-67	123.9
Jun-67	124.3
Jul-67	119.1
Aug-67	112.4
Sep-67	106.2
Oct-67	109.8
Nov-67	113.1
Dec-67	114.9
Jan-68	115.9
Feb-68	116.3
Mar-68	114.4

WATER CONSERVATION – SUMMARY – GROUND WATER

GROUND WATER FLUCTUATION:

Location: Central Basin **Ground Surface Elevation: 159.7 ft above MSL**

STATION	1601T
	WS Elev.
Apr-68	115.3
May-68	114.7
Jun-68	113.5
Jul-68	111.6
Aug-68	108.7
Sep-68	105.9
Oct-68	109.4
Nov-68	113
Dec-68	112
Jan-69	107.2
Feb-69	111
Mar-69	116
Apr-69	120.9
May-69	121.7
Jun-69	120.6
Jul-69	119.7
Aug-69	116.7
Sep-69	112.6
Oct-69	107.9
Nov-69	104.7
Dec-69	109.6
Jan-70	113.8
Feb-70	115.3
Mar-70	119.5
Apr-70	121.7
May-70	117.8
Jun-70	113.8
Jul-70	111.1
Aug-70	106.8
Sep-70	103.9
Oct-70	101.3
Nov-70	106.9
Dec-70	112.5
Jan-71	117
Feb-71	115.9
Mar-71	117.3
Apr-71	117
May-71	113.3
Jun-71	110.7
Jul-71	107.4
Aug-71	106.2
Sep-71	102.6
Oct-71	100.6
Nov-71	100.8
Dec-71	103

WATER CONSERVATION – SUMMARY – GROUND WATER

GROUND WATER FLUCTUATION:

Location: Central Basin **Ground Surface Elevation: 159.7 ft above MSL**

STATION	1601T
	WS Elev.
Jan-72	107
Feb-72	109.5
Mar-72	105.8
Apr-72	98.7
May-72	94.6
Jun-72	90.1
Jul-72	86.2
Aug-72	80.3
Sep-72	76.3
Oct-72	73.2
Nov-72	71.1
Dec-72	75.8
Jan-73	83
Feb-73	88.7
Mar-73	97.9
Apr-73	103.1
May-73	101.9
Jun-73	104.1
Jul-73	105.5
Aug-73	106.4
Sep-73	107.1
Oct-73	103.7
Nov-73	104.4
Dec-73	106
Jan-74	109.3
Feb-74	105.7
Mar-74	108.7
Apr-74	111.7
May-74	112.8
Jun-74	111.8
Jul-74	108.2
Aug-74	105.1
Sep-74	102.6
Oct-74	101.4
Nov-74	99.7
Dec-74	100
Jan-75	101.7
Feb-75	101.7
Mar-75	103.4
Apr-75	105.7
May-75	103.7
Jun-75	104.1
Jul-75	104.8
Aug-75	100.9
Sep-75	96.7

WATER CONSERVATION – SUMMARY – GROUND WATER

GROUND WATER FLUCTUATION:

Location: Central Basin **Ground Surface Elevation: 159.7 ft above MSL**

STATION	1601T
	WS Elev.
Oct-75	93.4
Nov-75	91.4
Dec-75	90.1
Jan-76	89.3
Feb-76	89.7
Mar-76	95.3
Apr-76	93
May-76	93.6
Jun-76	84.3
Jul-76	88.3
Aug-76	85.5
Sep-76	77.9
Oct-76	77.7
Nov-76	74.1
Dec-76	69.8
Jan-77	69.2
Feb-77	79.8
Mar-77	89
Apr-77	87.6
May-77	81.7
Jun-77	80.2
Jul-77	74.9
Aug-77	70.2
Sep-77	67.1
Oct-77	64.5
Nov-77	61.7
Dec-77	59
Jan-78	65.2
Feb-78	81.7
Mar-78	91.8
Apr-78	96.8
May-78	101.5
Jun-78	103.4
Jul-78	101.2
Aug-78	101.4
Sep-78	101.1
Oct-78	102.8
Nov-78	104.6
Dec-78	107.8
Jan-79	111.4
Feb-79	114.4
Mar-79	115.3
Apr-79	116.4
May-79	113.5
Jun-79	114.5

WATER CONSERVATION – SUMMARY – GROUND WATER

GROUND WATER FLUCTUATION:

Location: Central Basin **Ground Surface Elevation: 159.7 ft above MSL**

STATION	1601T
	WS Elev.
Jul-79	111.4
Aug-79	112
Sep-79	113.1
Oct-79	113.7
Nov-79	112.7
Dec-79	114.1
Jan-80	113.4
Feb-80	117.4
Mar-80	119.9
Apr-80	123
May-80	122.5
Jun-80	121.3
Jul-80	119
Aug-80	113.6
Sep-80	108.8
Oct-80	107
Nov-80	109
Dec-80	112
Jan-81	114.2
Feb-81	115.1
Mar-81	115.9
Apr-81	116.4
May-81	115.5
Jun-81	114.2
Jul-81	111.6
Aug-81	110.5
Sep-81	110.8
Oct-81	110.6
Nov-81	109
Dec-81	108.6
Jan-82	111.2
Feb-82	114.5
Mar-82	115.1
Apr-82	117.3
May-82	115
Jun-82	110.4
Jul-82	107.9
Aug-82	104.7
Sep-82	100.3
Oct-82	103.1
Nov-82	108.3
Dec-82	113.6
Jan-83	115.3
Feb-83	117
Mar-83	120.4

WATER CONSERVATION – SUMMARY – GROUND WATER

GROUND WATER FLUCTUATION:

Location: Central Basin **Ground Surface Elevation: 159.7 ft above MSL**

STATION	1601T
	WS Elev.
Apr-83	123.5
May-83	124.5
Jun-83	122.9
Jul-83	122.4
Aug-83	122.5
Sep-83	117.6
Oct-83	116.1
Nov-83	121.1
Dec-83	122.7
Jan-84	123.7
Feb-84	120.5
Mar-84	116
Apr-84	117.6
May-84	120.9
Jun-84	121.6
Jul-84	120.2
Aug-84	114.2
Sep-84	109.4
Oct-84	104.5
Nov-84	99.8
Jan-85	113.4
Feb-85	113.4
May-85	119.3
Jun-85	119.2
Jul-85	117.8
Aug-85	110.2
Sep-85	104.6
Oct-85	99.5
Nov-85	95.9
Dec-85	97.6
Jan-86	98.1
Feb-86	101.7
Mar-86	111.2
Apr-86	115.9
May-86	117.8
Jun-86	119.2
Jul-86	113.7
Aug-86	105.8
Sep-86	102
Oct-86	100.8
Nov-86	98.6
Dec-86	99.5
Jan-87	105.3
Feb-87	108.6
Mar-87	111

WATER CONSERVATION – SUMMARY – GROUND WATER

GROUND WATER FLUCTUATION:

Location: Central Basin **Ground Surface Elevation: 159.7 ft above MSL**

STATION	1601T
	WS Elev.
Apr-87	111.5
May-87	110.8
Jun-87	108.1
Jul-87	101.1
Aug-87	98.2
Sep-87	96.5
Oct-87	98.2
Nov-87	99.5
Dec-87	102.5
Jan-88	101.8
Feb-88	98.9
Mar-88	97.7
Apr-88	97.8
May-88	101.6
Jun-88	105.7
Jul-88	106.7
Aug-88	101.7
Sep-88	94.1
Oct-88	91.1
Nov-88	89
Dec-88	89.6
Jan-89	98.3
Feb-89	103.3
Mar-89	106.4
Apr-89	108.4
May-89	109.5
Jun-89	107.8
Jul-89	106.8
Aug-89	103.7
Sep-89	99.4
Oct-89	95.2
Nov-89	93.1
Dec-89	96.4
Jan-90	96.4
Feb-90	100.2
Mar-90	106.6
Apr-90	110.4
May-90	113.9
Jun-90	113
Jul-90	112.7
Aug-90	107.7
Sep-90	103.8
Oct-90	104.5
Nov-90	105.2
Dec-90	104

WATER CONSERVATION – SUMMARY – GROUND WATER

GROUND WATER FLUCTUATION:

Location: Central Basin **Ground Surface Elevation: 159.7 ft above MSL**

STATION	1601T
	WS Elev.
Jan-91	102
Feb-91	107.2
Mar-91	106.1
Apr-91	120.8
May-91	113.8
Jun-91	110.5
Jul-91	107.1
Aug-91	107.2
Sep-91	109.1
Oct-91	111.4
Nov-91	115
Dec-91	115.6
Jan-92	116
Feb-92	115.7
Mar-92	119.7
Apr-92	121.1
May-92	118.7
Jun-92	115.7
Jul-92	116.8
Aug-92	118.6
Sep-92	114.8
Oct-92	111.7
Nov-92	115.7
Dec-92	116
Jan-93	121.1
Feb-93	125.3
Mar-93	125.3
Apr-93	129.2
May-93	127.3
Jun-93	123.5
Jul-93	123.7
Aug-93	123
Sep-93	123
Oct-93	120.4
Nov-93	120.7
Dec-93	121.6
Jan-94	124.5
Feb-94	124.3
Mar-94	126.6
Apr-94	127
May-94	126
Jun-94	126.3
Jul-94	126
Aug-94	121.9
Sep-94	115.2

WATER CONSERVATION – SUMMARY – GROUND WATER

GROUND WATER FLUCTUATION:

Location: Central Basin **Ground Surface Elevation: 159.7 ft above MSL**

STATION	1601T
	WS Elev.
Oct-94	110
Nov-94	110.5
Dec-94	113.1
Jan-95	117
Feb-95	124.8
Mar-95	126.9
Apr-95	129.5
May-95	128.6
Jun-95	126.9
Jul-95	125.7
Aug-95	121.8
Sep-95	116.3
Oct-95	111.8
Nov-95	113
Dec-95	113.7
Jan-96	115.9
Feb-96	119.7
Mar-96	126.1
Apr-96	128.5
May-96	128
Jun-96	124.4
Jul-96	125.9
Aug-96	123.2
Sep-96	119.7
Oct-96	119.2
Nov-96	116.7
Dec-96	117.9
Jan-97	117
Feb-97	129.8
Mar-97	127.9
Apr-97	125.5
May-97	127.1
Jun-97	125.2
Jul-97	124.8
Aug-97	123.1
Sep-97	118
Oct-97	115.7
Nov-97	112.7
Dec-97	113.2
Jan-98	117.5
Feb-98	122.6
Mar-98	127.2
Apr-98	129.2
May-98	129.1
Jun-98	127.3

WATER CONSERVATION – SUMMARY – GROUND WATER

GROUND WATER FLUCTUATION:

Location: Central Basin **Ground Surface Elevation: 159.7 ft above MSL**

STATION	1601T
	WS Elev.
Jul-98	126.1
Aug-98	123.3
Sep-98	119.2
Oct-98	116.8
Nov-98	115.7
Dec-98	116.5
Jan-99	114.4
Feb-99	117.7
Mar-99	117.6
Apr-99	120.1
May-99	117.3
Jun-99	115.4
Jul-99	109.4
Aug-99	105.4
Sep-99	100.9
Oct-99	97.3
Nov-99	95.9
Dec-99	96.8
Jan-00	103.3
Feb-00	113.6
Mar-00	119.5
Apr-00	119.9
May-00	119.2
Jun-00	118
Jul-00	114
Aug-00	108.8
Oct-00	103.7
Nov-00	106
Dec-00	108
Jan-01	108
Feb-01	111
Mar-01	117
Apr-01	117
May-01	114
Jun-01	111
Jul-01	107
Aug-01	101
Sep-01	98

WATER CONSERVATION – SUMMARY – GROUND WATER

GROUND WATER FLUCTUATION:

Location: Main San Gabriel Basin **Ground Surface Elevation: 245.0 ft above MSL**

STATION	2955X	2965C
	WS Elev.	WS Elev.
Jan-61	209.9	
Feb-61	210.5	
Mar-61	210.1	
Apr-61	210.5	
May-61	209.7	
Jun-61	208.5	
Jul-61	207.8	
Aug-61	204.9	
Sep-61	204.3	
Oct-61	205.2	
Nov-61	205.9	
Dec-61	206.1	
Jan-62	208	
Feb-62	208.5	
Mar-62	209.9	
Apr-62	210.7	
May-62	211.2	
Jun-62	210.3	
Jul-62	210	
Aug-62	209.1	
Sep-62	209.2	
Oct-62	209.5	
Nov-62	209.2	
Dec-62	209.3	
Jan-63	209.9	
Feb-63	209.8	
Mar-63	209.8	
Apr-63	209.9	
May-63	208.4	
Jun-63	207.5	
Jul-63	206.5	
Aug-63	203.4	
Sep-63	202.4	
Oct-63	201.8	
Nov-63	203.3	
Dec-63	204.3	
Jan-64	204.6	
Feb-64	203.6	
Mar-64	202.9	
Apr-64	201.3	
Jul-64	199.8	
Aug-64	198.2	
Sep-64	195.9	
Oct-64	195.1	
Nov-64	197.4	

WATER CONSERVATION – SUMMARY – GROUND WATER

GROUND WATER FLUCTUATION:

Location: Main San Gabriel Basin **Ground Surface Elevation: 245.0 ft above MSL**

STATION	2955X	2965C
	WS Elev.	WS Elev.
Dec-64	194.2	
Jan-65	199.1	
Feb-65	198.4	
Mar-65	199.1	
Apr-65	200.2	
May-65	200.3	
Jun-65	199.5	
Jul-65	199.4	
Aug-65	196.8	
Sep-65	195.1	
Oct-65	194	
Nov-65	194	
Dec-65	196.2	
Jan-66	202.1	
Feb-66	202.4	
Mar-66	205.4	
Apr-66	206.6	
May-66	207.3	
Jun-66	209.2	
Jul-66	206.4	
Aug-66	205.4	
Sep-66	204.6	
Oct-66	206.5	
Nov-66	206.3	
Dec-66	207.1	
Jan-67	208.5	
Feb-67	209.4	
Mar-67	210.2	
Apr-67	211.8	
May-67	212.5	
Jun-67	213.6	
Jul-67	213.8	
Aug-67	213.9	
Sep-67	213.9	
Oct-67	213.8	
Nov-67	215.1	
Dec-67	215.6	
Jan-68	216.8	
Feb-68	217.8	
Mar-68	217.9	
Apr-68	217.8	
May-68	217.6	
Jun-68	217.4	
Jul-68	217.3	
Aug-68	216	

WATER CONSERVATION – SUMMARY – GROUND WATER

GROUND WATER FLUCTUATION:

Location: Main San Gabriel Basin **Ground Surface Elevation: 245.0 ft above MSL**

STATION	2955X	2965C
	WS Elev.	WS Elev.
Sep-68	215.7	
Oct-68	215.4	
Nov-68	215.8	
Dec-68	215.3	
Jan-69	215.2	
Feb-69	217.6	
Mar-69	217.8	
Apr-69	218.8	
May-69	218.6	
Jun-69	218.9	
Jul-69	219.1	
Aug-69	218.9	
Sep-69	218	
Oct-69	218.3	
Nov-69	218.7	
Dec-69	218.5	
Jan-70	218.7	
Feb-70	218.5	
Mar-70	218.6	
Apr-70	218.3	
May-70	218	
Jul-70	217.1	
Aug-70	215.5	
Sep-70	215	
Oct-70	213.8	
Nov-70	213.2	
Dec-70	213.7	
Jan-71	213.9	
Feb-71	213.6	
Mar-71	213.7	
Apr-71	213.5	
May-71	214.6	
Jun-71	214.7	
Jul-71	214.4	
Aug-71	212.8	
Oct-71	207.1	
Nov-71	211.4	
Dec-71	211.3	
Jan-72	211.7	
Feb-72	212.8	
Mar-72	212.2	
Apr-72	210	
May-72	209.6	
Jun-72	208.1	
Jul-72	206.3	

WATER CONSERVATION – SUMMARY – GROUND WATER

GROUND WATER FLUCTUATION:

Location: Main San Gabriel Basin **Ground Surface Elevation: 245.0 ft above MSL**

STATION	2955X	2965C
	WS Elev.	WS Elev.
Aug-72	206.7	
Sep-72	204.3	
Oct-72	202.9	
Nov-72	202.9	
Dec-72	204.5	
Jan-73	204.7	
Feb-73	205.7	
Mar-73	206.1	
Apr-73	206.6	
May-73	207.4	
Jun-73	207.8	
Jul-73	207.5	
Aug-73	207.5	
Sep-73	207.2	
Oct-73	207.5	
Nov-73	206.7	
Dec-73	207.9	
Jan-74	207.8	
Feb-74	208.5	
Mar-74	208.5	
Apr-74	208.4	
May-74	208	
Jun-74	207.3	
Jul-74	206.5	
Aug-74	205.7	
Sep-74	205.4	
Oct-74	205.2	
Nov-74	205.2	
Dec-74	205	
Jan-75	205.2	
Feb-75	205	
Mar-75	205.3	
Apr-75	205	
May-75	204.2	
Jun-75	204.5	
Jul-75	204.2	
Aug-75	202.7	
Sep-75	201.8	
Oct-75	200.9	
Nov-75	200.6	
Dec-75	199.8	
Jan-76	200	
Feb-76	199.9	
Mar-76	200.2	
Apr-76	199.9	

WATER CONSERVATION – SUMMARY – GROUND WATER

GROUND WATER FLUCTUATION:

Location: Main San Gabriel Basin **Ground Surface Elevation: 245.0 ft above MSL**

STATION	2955X	2965C
	WS Elev.	WS Elev.
May-76	199.1	
Jun-76	198.3	
Jul-76	198.1	
Aug-76	197	
Sep-76	194.8	
Oct-76	194.5	
Nov-76	193.9	
Dec-76	193.4	
Jan-77	193.5	
Feb-77	194.1	
Mar-77	194.4	
Apr-77	194	
May-77	193	
Jun-77	192.5	
Jul-77	191.4	
Aug-77	188.9	
Sep-77	188.5	
Oct-77	187.1	
Nov-77	186.3	
Dec-77	185.6	
Jan-78	186.6	
Feb-78	191.3	
Mar-78	194.9	
Apr-78	199.9	
May-78	201.2	
Jun-78	202.7	
Jul-78	203.8	
Aug-78	204.5	
Sep-78	205.6	
Oct-78	206.1	
Nov-78	207.2	
Dec-78	207.9	
Jan-79	209.2	
Feb-79	209.9	
Mar-79	210.8	
Jul-79	211.4	
Sep-79	211.1	
Oct-79	211.2	
Nov-79	211.4	
Dec-79	211.1	
Jan-80	211.6	
Feb-80	213.5	
Mar-80	214.5	
Apr-80	214.4	
May-80	214.8	

WATER CONSERVATION – SUMMARY – GROUND WATER

GROUND WATER FLUCTUATION:

Location: Main San Gabriel Basin **Ground Surface Elevation: 245.0 ft above MSL**

STATION	2955X	2965C
	WS Elev.	WS Elev.
Jun-80	214.9	
Jul-80	214.6	
Aug-80	214.5	
Sep-80	214.5	
Oct-80	214.6	
Nov-80	214.8	
Dec-80	214.9	
Jan-81	214.9	
Feb-81	215.1	
Mar-81	215.5	
Apr-81	214.9	
May-81	212.7	
Jun-81	213.5	
Jul-81	213.2	
Aug-81	211.8	
Sep-81	212.1	
Jan-82	210.3	
Apr-82	210.7	
May-82	210.4	
Aug-82	208.7	
Sep-82	208.4	
Oct-82	208.1	
Nov-82	208.5	
Dec-82	209.2	
Jan-83	209.5	
Feb-83	210.8	
Mar-83	212.7	
Apr-83	213.5	
May-83	214.3	
Jun-83	214.4	
Jul-83	215	
Aug-83	215.1	
Sep-83	215.7	
Oct-83	216.2	
Nov-83	216.9	
Dec-83	217.3	
Jan-84	217.6	
Feb-84	217.6	
Mar-84	217.3	
Apr-84	217.3	
May-84	216.5	
Jun-84	216	
Jul-84	215.6	
Aug-84	214.2	
Sep-84	213.7	

WATER CONSERVATION – SUMMARY – GROUND WATER

GROUND WATER FLUCTUATION:

Location: Main San Gabriel Basin **Ground Surface Elevation: 245.0 ft above MSL**

STATION	2955X	2965C
	WS Elev.	WS Elev.
Oct-84	212.5	
Nov-84	213.1	
Dec-84	213.5	
Jan-85	213.6	
Feb-85	213.5	
Jun-85	211.7	
Jul-85	210.1	
Aug-85	209.2	
Sep-85	207.9	
Oct-85	207.7	
Nov-85	207.3	
Dec-85	208	
Jan-86	207.8	
Feb-86	208	
Mar-86	209.5	
Apr-86	209.8	
May-86	209.3	
Jun-86	209	
Jul-86	207.6	
Aug-86	206.1	
Sep-86	205.9	
Oct-86	204	
Nov-86	204.4	
Dec-86	204.5	
Jan-87	204.7	217.5
Feb-87	204.6	217.5
Mar-87	204.5	217.8
Apr-87	204.4	217.7
May-87	203.1	217
Jun-87	202.8	216.8
Jul-87	204.3	215.9
Aug-87	203.3	215.2
Sep-87	202.5	214.5
Oct-87	201.3	213.4
Nov-87	202.6	213.5
Dec-87	202.5	213.4
Jan-88	202.5	213.1
Feb-88	196.8	212.9
Mar-88	200.2	212.9
Apr-88	199.9	212.6
May-88	197.3	212.8
Jun-88	200.7	212.6
Jul-88	200.5	211.6
Aug-88	199	210.5
Sep-88	196.7	209

WATER CONSERVATION – SUMMARY – GROUND WATER

GROUND WATER FLUCTUATION:

Location: Main San Gabriel Basin **Ground Surface Elevation: 245.0 ft above MSL**

STATION	2955X	2965C
	WS Elev.	WS Elev.
Oct-88	196.1	207.9
Nov-88	188.2	207
Dec-88	190.3	206.9
Jan-89	198.2	207.7
Jul-89		207.4
Aug-89	200.5	213.1
Sep-89		203
Nov-89	192.7	201.4
Dec-89	193.3	201.9
Jan-90	195.5	200.4
Feb-90	197.6	197.1
Mar-90	204.7	197
Apr-90	188.4	
May-90	190.8	199.5
Jun-90	191.4	
Nov-90		199.4
Apr-92		201
Mar-93		219.1
Sep-93		220
Apr-94		222.3
Oct-94		217.8
Apr-95		220.2
Apr-96		223.3
Oct-96		220
May-97		220.1
Oct-97		215.4
Apr-98		219
Oct-98		220.2
Apr-99		220.7
Nov-99		216.4
Mar-00		216.1
Sep-00		218.1
Apr-01		213.4

WATER CONSERVATION – SUMMARY – GROUND WATER

GROUND WATER FLUCTUATION:

Location: Main San Gabriel Basin, Baldwin Park **Ground Surface Elevation: 386.7 ft above MSL**

STATION	3030F
	WS Elev.
Jan-60	250.4
Feb-60	250.8
Mar-60	251
Apr-60	250.4
May-60	248.9
Jun-60	247.3
Jul-60	244.8
Aug-60	241.4
Sep-60	239
Oct-60	235.8
Nov-60	236.1
Dec-60	236.7
Jan-61	236.7
Feb-61	236.5
Mar-61	236.5
Apr-61	236.1
May-61	235.1
Jun-61	233.6
Jul-61	231.4
Aug-61	228.9
Sep-61	226.6
Oct-61	225
Nov-61	224.1
Dec-61	224.2
Jan-62	225.3
Feb-62	225.4
Mar-62	233.6
Apr-62	245
May-62	243.7
Jun-62	242.1
Jul-62	240.1
Aug-62	239.2
Sep-62	240.4
Oct-62	238.8
Nov-62	238.3
Dec-62	238
Jan-63	237.6
Feb-63	236.5
Mar-63	236
Apr-63	235.4
May-63	233.6
Jun-63	233
Jul-63	228.1
Aug-63	225
Sep-63	223.7

WATER CONSERVATION – SUMMARY – GROUND WATER

GROUND WATER FLUCTUATION:

Location: Main San Gabriel Basin, Baldwin Park **Ground Surface Elevation: 386.7 ft above MSL**

STATION	3030F
	WS Elev.
Oct-63	223.2
Nov-63	223.7
Dec-63	223.7
Jan-64	223.6
Feb-64	222.9
Mar-64	222.3
Apr-64	221.6
May-64	220.3
Jun-64	219.2
Jul-64	217.4
Aug-64	215.6
Sep-64	213.8
Oct-64	212.2
Nov-64	211.2
Dec-64	211.6
Jan-65	212
Feb-65	212.1
Mar-65	212
Apr-65	212.6
May-65	222.9
Jun-65	211.7
Jul-65	211.9
Aug-65	211.8
Sep-65	209.8
Oct-65	209.2
Nov-65	209.2
Dec-65	211.3
Jan-66	233.6
Feb-66	251.5
Mar-66	252.5
Apr-66	254.7
May-66	252.8
Jun-66	248.9
Jul-66	245.4
Aug-66	240.5
Sep-66	236
Oct-66	233.3
Nov-66	231.6
Dec-66	231.6
Jan-67	247.4
Feb-67	249.3
Mar-67	260
Apr-67	266.8
May-67	274.8
Jun-67	284.7

WATER CONSERVATION – SUMMARY – GROUND WATER

GROUND WATER FLUCTUATION:

Location: Main San Gabriel Basin, Baldwin Park **Ground Surface Elevation: 386.7 ft above MSL**

STATION	3030F
	WS Elev.
Jul-67	287.7
Aug-67	284.9
Sep-67	280.6
Oct-67	276.8
Nov-67	275.3
Dec-67	274.7
Jan-68	277
Feb-68	276.4
Mar-68	275.7
Apr-68	274.9
May-68	273.7
Jun-68	271
Jul-68	268
Aug-68	264.6
Sep-68	260.4
Oct-68	258.5
Nov-68	256.9
Dec-68	256.3
Jan-69	256.6
Feb-69	260.4
Mar-69	278.3
Apr-69	293.9
May-69	300.3
Jun-69	301.8
Jul-69	298.6
Aug-69	293.3
Sep-69	288.5
Oct-69	284.1
Nov-69	280.2
Dec-69	278
Jan-70	276
Feb-70	274.5
Mar-70	273.3
Apr-70	277.4
May-70	277.7
Jun-70	274.2
Jul-70	270.8
Aug-70	266.7
Sep-70	263.2
Oct-70	260.1
Nov-70	258
Dec-70	256.6
Jan-71	257.1
Feb-71	261.3
Mar-71	262.9

WATER CONSERVATION – SUMMARY – GROUND WATER

GROUND WATER FLUCTUATION:

Location: Main San Gabriel Basin, Baldwin Park **Ground Surface Elevation: 386.7 ft above MSL**

STATION	3030F
	WS Elev.
Apr-71	261.6
May-71	259.6
Jun-71	257.7
Jul-71	255
Aug-71	251.5
Sep-71	248.1
Oct-71	245.2
Nov-71	243.6
Dec-71	242.8
Jan-72	242.1
Feb-72	243.2
Mar-72	243.1
Apr-72	242.2
May-72	240.3
Jun-72	237.9
Jul-72	234.7
Aug-72	230.9
Sep-72	228.1
Oct-72	226.1
Nov-72	224.9
Dec-72	225.3
Jan-73	226.7
Feb-73	226.3
Mar-73	229.7
Apr-73	244.7
May-73	250.3
Jun-73	250.8
Jul-73	247.4
Aug-73	243.6
Sep-73	239.3
Oct-73	236.9
Nov-73	235
Dec-73	234.7
Jan-74	234.8
Feb-74	237
Mar-74	240.7
Apr-74	240.6
May-74	240
Jun-74	238.7
Jul-74	238.5
Aug-74	237.1
Sep-74	235.6
Oct-74	233.5
Nov-74	231.8
Dec-74	230.6

WATER CONSERVATION – SUMMARY – GROUND WATER

GROUND WATER FLUCTUATION:

Location: Main San Gabriel Basin, Baldwin Park **Ground Surface Elevation: 386.7 ft above MSL**

STATION	3030F
	WS Elev.
Jan-75	230.2
Feb-75	229.3
Mar-75	228.6
Apr-75	228.8
May-75	230.2
Jun-75	232.6
Jul-75	234.8
Aug-75	231.5
Sep-75	227.5
Oct-75	224.9
Nov-75	224.5
Dec-75	223.7
Jan-76	224.7
Feb-76	223.2
Mar-76	222.6
Apr-76	225.9
May-76	226.1
Jun-76	223.4
Jul-76	220.2
Aug-76	217.2
Sep-76	214.7
Oct-76	214
Nov-76	214
Dec-76	213.8
Jan-77	212.5
Feb-77	213.8
Mar-77	215.5
Apr-77	214.5
May-77	212.8
Jun-77	212.3
Jul-77	211
Aug-77	208.6
Sep-77	207
Oct-77	205.7
Nov-77	204.9
Dec-77	203.7
Jan-78	203.7
Feb-78	210
Mar-78	229.7
Apr-78	244.9
May-78	254.5
Jun-78	262.5
Jul-78	270.4
Aug-78	266.9
Sep-78	260.9

WATER CONSERVATION – SUMMARY – GROUND WATER

GROUND WATER FLUCTUATION:

Location: Main San Gabriel Basin, Baldwin Park **Ground Surface Elevation: 386.7 ft above MSL**

STATION	3030F
	WS Elev.
Oct-78	258.6
Nov-78	256.1
Dec-78	255.5
Jan-79	253.8
Feb-79	256.3
Mar-79	257.8
Apr-79	262.2
May-79	267.2
Jun-79	268.6
Jul-79	266
Aug-79	262
Sep-79	257.7
Oct-79	254
Nov-79	251.6
Dec-79	250.5
Jan-80	249.9
Feb-80	249.3
Mar-80	255.7
Apr-80	267
May-80	278
Jun-80	284.9
Jul-80	281.6
Aug-80	276.7
Sep-80	272
Oct-80	268.6
Nov-80	265.2
Dec-80	263.1
Jan-81	262.7
Feb-81	261.5
Mar-81	260.4
Apr-81	259.5
May-81	257.7
Jun-81	255.3
Jul-81	251.9
Aug-81	248.2
Sep-81	245.3
Oct-81	242.8
Nov-81	241.7
Dec-81	241.3
Jan-82	242.4
Feb-82	244.6
Mar-82	247.2
Apr-82	249.7
May-82	249.1
Jun-82	247.5

WATER CONSERVATION – SUMMARY – GROUND WATER

GROUND WATER FLUCTUATION:

Location: Main San Gabriel Basin, Baldwin Park **Ground Surface Elevation: 386.7 ft above MSL**

STATION	3030F
	WS Elev.
Jul-82	245.1
Aug-82	243.6
Sep-82	241.2
Oct-82	240.5
Nov-82	245.6
Dec-82	249.9
Jan-83	252.3
Feb-83	253.2
Mar-83	256.8
Apr-83	271.4
May-83	279.8
Jun-83	286.9
Jul-83	293.9
Aug-83	293.8
Sep-83	288.3
Oct-83	283.2
Nov-83	280.9
Dec-83	282.5
Jan-84	280.9
Feb-84	281.9
Mar-84	279.8
Apr-84	276.6
May-84	273.7
Jun-84	270
Jul-84	266.4
Aug-84	262.4
Sep-84	258.7
Oct-84	254
Nov-84	253.5
Dec-84	252.7
Jan-85	252.4
Feb-85	254.4
Mar-85	252.9
Apr-85	251.5
May-85	250.1
Jun-85	248
Jul-85	245.3
Aug-85	242.1
Sep-85	239.1
Oct-85	237.5
Nov-85	238.7
Dec-85	242.2
Jan-86	245.4
Feb-86	247.1
Mar-86	247.7

WATER CONSERVATION – SUMMARY – GROUND WATER

GROUND WATER FLUCTUATION:

Location: Main San Gabriel Basin, Baldwin Park **Ground Surface Elevation: 386.7 ft above MSL**

STATION	3030F
	WS Elev.
Apr-86	252.9
May-86	253.9
Jun-86	252.8
Jul-86	250.2
Aug-86	247.2
Sep-86	243.3
Oct-86	240.7
Nov-86	239
Dec-86	237.4
Jan-87	239
Feb-87	239.8
Mar-87	240.7
Apr-87	241.5
May-87	241
Jun-87	238.2
Jul-87	235.9
Aug-87	232.6
Sep-87	229.9
Oct-87	227.8
Nov-87	226.8
Dec-87	226.9
Jan-88	227.8
Feb-88	230.1
Mar-88	232.5
Apr-88	230.7
May-88	228.7
Jun-88	226.1
Jul-88	223.7
Aug-88	221.9
Sep-88	219.4
Oct-88	217.7
Nov-88	216.7
Dec-88	216.2
Jan-89	218.7
Feb-89	223.6
Mar-89	225.5
Apr-89	224.1
May-89	222.3
Jun-89	225.9
Jul-89	221.4
Aug-89	218.9
Sep-89	210.2
Oct-89	211.2
Nov-89	210.4
Dec-89	209.5

WATER CONSERVATION – SUMMARY – GROUND WATER

GROUND WATER FLUCTUATION:

Location: Main San Gabriel Basin, Baldwin Park **Ground Surface Elevation: 386.7 ft above MSL**

STATION	3030F
	WS Elev.
Jan-90	208.8
Feb-90	207.9
Mar-90	207.7
Apr-90	207.8
May-90	209.5
Jun-90	208.3
Jul-90	205.7
Aug-90	203.5
Sep-90	201
Oct-90	191.7
Nov-90	199.8
Dec-90	200.5
Jan-91	199.8
Feb-91	198.5
Mar-91	196.7
Apr-91	198.4
May-91	200.7
Jun-91	200.7
Jul-91	198
Aug-91	199.7
Sep-91	212.4
Oct-91	206.3
Nov-91	209.3
Dec-91	209.9
Jan-92	210.5
Feb-92	210.9
Mar-92	215.8
Apr-92	226.1
May-92	233
Jun-92	233.5
Jul-92	237.5
Aug-92	238.1
Sep-92	235.5
Oct-92	232.1
Nov-92	230.7
Dec-92	231.5
93-JAN	238.5
Feb-93	246
Mar-93	254.8
Apr-93	263.4
May-93	269.3
Jun-93	271.3
Jul-93	266.8
Aug-93	263.6
Sep-93	259.7

WATER CONSERVATION – SUMMARY – GROUND WATER

GROUND WATER FLUCTUATION:

Location: Main San Gabriel Basin, Baldwin Park **Ground Surface Elevation: 386.7 ft above MSL**

STATION	3030F
	WS Elev.
Oct-93	259
Nov-93	259
Dec-93	257.1
Jan-94	255.4
Feb-94	253.2
Mar-94	251.4
Apr-94	249.3
May-94	247.8
Jun-94	249
JUL-94.	248.1
Aug-94	245.2
Sep-94	241.8
Oct-94	238.5
Nov-94	237
Dec-94	235.4
Jan-95	235.4
Feb-95	238.1
Mar-95	248.3
Apr-95	264.2
May-95	270.1
Jun-95	271.1
JUL-945	267.8
Aug-95	265.7
Sep-95	263
Oct-95	257.1
Nov-95	257.4
Dec-95	255.9
Jan-96	253.5
Feb-96	252.8
Mar-96	250.1
Apr-96	249.9
May-96	248.2
Jun-96	249.2
Jul-96	248.4
Aug-96	247.3
Sep-96	248
Oct-96	249.4
Nov-96	248.4
Dec-96	246.5
Jan-97	246.2
Feb-97	248.6
Mar-97	250.9
Apr-97	248.1
May-97	245.7
Jun-97	242.6

WATER CONSERVATION – SUMMARY – GROUND WATER

GROUND WATER FLUCTUATION:

Location: Main San Gabriel Basin, Baldwin Park **Ground Surface Elevation: 386.7 ft above MSL**

STATION	3030F
	WS Elev.
Jul-97	240.5
Aug-97	238.9
Sep-97	239.6
Oct-97	238.6
Nov-97	238.3
Dec-97	241.4
Jan-98	240.8
Feb-98	241.4
Mar-98	245.8
Apr-98	251.7
May-98	259
Jun-98	265.2
Jul-98	267.6
Aug-98	266.1
Sep-98	264.8
Oct-98	262.3
Nov-98	260.9
Dec-98	259.1
Jan-99	256.3
Feb-99	253.9
Mar-99	251.9
Apr-99	250.4
May-99	248
Jun-99	245.5
Jul-99	242.5
Aug-99	240.5
Sep-99	238.9
Oct-99	237.4
Nov-99	235.7
Dec-99	233.1
Jan-00	231.4
Feb-00	231
Mar-00	231
Apr-00	230.6
May-00	229.6
Jun-00	228.5
Jul-00	227.4
Aug-00	225.8
Sep-00	224.9
Oct-00	226.6
Nov-00	227.8
Dec-00	229
Jan-01	229.1
Feb-01	227.9
Mar-01	227.7

WATER CONSERVATION – SUMMARY – GROUND WATER

GROUND WATER FLUCTUATION:

Location: Main San Gabriel Basin, Baldwin Park **Ground Surface Elevation: 386.7 ft above MSL**

STATION	3030F
	WS Elev.
Apr-01	225.9
May-01	223.1
Jun-01	221.2
Jul-01	218.2
Aug-01	217.1
Sep-01	216.4

WATER CONSERVATION – SUMMARY – GROUND WATER

GROUND WATER FLUCTUATION:

Location: Pomona Basin **Ground Surface Elevation: 999.4 ft above MSL**

STATION	3251E	3261P	4469A
	WS Elev.	WS Elev.	WS Elev.
Jan-55	761.6		
Feb-55	766.2		
Mar-55	768.5		
Apr-55	763.9		
May-55	770.8		
Jun-55	770.8		
Jul-55	756.9		
Aug-55	725.8		
Sep-55	720		
Oct-55	738.5		
Nov-55	717.7		
Dec-55	754.6		
Jan-56	754.6		
Feb-56	756.9		
Mar-56	759.3		
Apr-56	759.3		
May-56	763.9		
Jun-56	763.9		
Jul-56	745.4		
Aug-56	731.5		
Sep-56	740.7		
Feb-57	746		
Mar-57	739.3		
Apr-57	746.2		
May-57	753.2		
Jun-57	750.9		
Jul-57	711.6		
Aug-57	689.7		
Sep-57	676		
Oct-57	711.6		
Nov-57	714		
Jan-58		663.1	
Feb-58	706.3	665.6	
Mar-58	716.9	664.4	
Apr-58	718	665.6	
May-58	631.4	640.2	
Jun-58	690.3	628.6	
Jul-58	682.3	647.1	
Aug-58	686.9	644.8	
Sep-58	654.6	646	
Oct-58	652.3	643.6	
Nov-58	686.9	644.8	
Dec-58	690.3	646	
Jan-59	691.5	646	
Feb-59	685.7	695.6	

WATER CONSERVATION – SUMMARY – GROUND WATER

GROUND WATER FLUCTUATION:

Location: Pomona Basin **Ground Surface Elevation: 999.4 ft above MSL**

STATION	3251E	3261P	4469A
	WS Elev.	WS Elev.	WS Elev.
Mar-59	698.4	702.6	
Apr-59	707.7	702.6	
May-59	694.9	650.6	
Jun-59	690.3	647.1	
Jul-59	686.9	637.9	
Aug-59	675.3	663.3	
Sep-59	670.7	629.8	
Oct-59		624	
Nov-59	662.6	628.6	
Dec-59	669.6	626.3	
Jan-60	670.7	624	
Feb-60	674.2	627.5	
Mar-60	673	628.6	
Apr-60	673	626.3	
May-60	670.7	617.1	
Jun-60	676.1	624	
Jul-60	662.6	617.9	
Aug-60	637.2	607.9	
Sep-60	644.1	603.2	
Oct-60	641.8	606.7	
Nov-60	643	610.2	
Dec-60	663.8	663.3	
Jan-61	656.8	620.6	
Feb-61	675.3	672.5	
Mar-61	675.9	677.2	
Apr-61	682.3	679.5	
May-61	662.6		
Jun-61	655.7		
Jul-61	604.9	606.3	
Aug-61	624.5	621.3	
Sep-61	617.6	578.6	
Oct-61	623.3		
Nov-61	622.2		
Dec-61	629.1		
Jan-62	643	645.6	
Feb-62	646.5	643.3	
Mar-62	650	650.2	
Apr-62	652.3	652.5	
May-62	643		
Jun-62	640.8		
Jul-62	637.3	590.2	
Aug-62	640.8	622.5	
Sep-62	626.9	579.8	
Oct-62	632.7	585.6	
Nov-62	629.2	578.7	

WATER CONSERVATION – SUMMARY – GROUND WATER

GROUND WATER FLUCTUATION:

Location: Pomona Basin **Ground Surface Elevation: 999.4 ft above MSL**

STATION	3251E	3261P	4469A
	WS Elev.	WS Elev.	WS Elev.
Dec-62	629.2	574	
Jan-63	630.4	578.7	
Feb-63	629.2	630.6	
Mar-63	632.7	569.4	
Apr-63	623.5	576.4	
May-63	626.9	572.9	
Jun-63	628.1	613.3	
Jul-63	570.3	563.6	
Aug-63	608.4	601.7	
Sep-63	600.3	601.7	
Oct-63	548.3	555.5	
Nov-63	593.4	558	
Dec-63	609.6	556.9	
Jan-64	608.4	565.9	
Feb-64	620	619	
Mar-64	615.3	569.4	
Apr-64	608.4	562.5	
May-64	613	567.1	
Jun-64	606.1		
Jul-64	548.3	553.2	
Aug-64	584.1	550.9	
Sep-64	588.7	604.3	
Oct-64	583	539.6	
Nov-64	583	593.9	
Dec-64	593.4	597.4	
Jan-65	588.7	532.7	
Feb-65	588.7	522.3	
Mar-65	583	528.1	
Apr-65	585.3	533.8	
May-65	583	527	
Jun-65	537.9	521	
Jul-65	578.4	528.1	
Aug-65		517.7	
Sep-65	559.9	513.1	
Oct-65	571.4	520	
Nov-65	571.5		
Dec-65	574.9	575.3	
Jan-66		517.7	
Feb-66	581.8	580	
Mar-66	578.4	515.4	
Apr-66		517.7	
Jun-66	564.6		
Jul-66	551.9		
Aug-66	541.5		
Sep-66	541.5		

WATER CONSERVATION – SUMMARY – GROUND WATER

GROUND WATER FLUCTUATION:

Location: Pomona Basin **Ground Surface Elevation: 999.4 ft above MSL**

STATION	3251E	3261P	4469A
	WS Elev.	WS Elev.	WS Elev.
Oct-66	546.1		
Nov-66	548.5	510.7	
Jan-67	553.1	499.2	
Feb-67	557.7	506.1	
Mar-67	549.6	499.2	
Apr-67	550.8	499.2	
May-67	550.8	499.2	
Jun-67	553.1	561.6	
Jul-67	543.8	496.9	
Aug-67	541.5	480.7	
Sep-67	536.9	477.2	
Oct-67	541.5	556.9	
Nov-67	553.1	492.3	
Dec-67	560		
Jan-68	566.9	495.7	
Feb-68	557.7	492.3	
Mar-68	560	496.9	
Apr-68	560	496.9	
May-68	562.3	490	
Jun-68	487.1	473.8	
Jul-68	549.6	555.9	
Aug-68	536.9		
Sep-68	535.7		
Oct-68	553.1		
Nov-68	546.1	501.6	
Dec-68	555.4	500.4	
Jan-69		493.5	
Feb-69	553.1	490	
Mar-69	557.7	565.1	
Apr-69	557.7	559.3	
May-69	472.2	490	
Jun-69	543.8	479.6	
Jul-69	553.1	480.8	
Aug-69	546.1	478.5	
Sep-69	430.6	446.1	
Oct-69	533.4	470.4	
Nov-69	541.5	473.8	
Dec-69	551.9	552.4	
Jan-70	554.2	543.1	
Feb-70	557.7	550.1	
Mar-70	564.6	555.8	
Apr-70	571.6	550.1	
May-70	574	488.8	
Jun-70	586	554.7	
Jul-70	590.7	575.5	

WATER CONSERVATION – SUMMARY – GROUND WATER

GROUND WATER FLUCTUATION:

Location: Pomona Basin **Ground Surface Elevation: 999.4 ft above MSL**

STATION	3251E	3261P	4469A
	WS Elev.	WS Elev.	WS Elev.
Aug-70	590.7	492.3	
Sep-70	597.7	495.8	
Oct-70	602.3	495.8	
Nov-70	608	498.6	
Dec-70	612.7	573.2	
Jan-71	623.1	588.2	
Feb-71	620.8	598.6	
Mar-71	635.8	605.5	
Apr-71	642.7	619.9	
May-71	643.9	533.9	
Jun-71	648.5	533.9	
Jul-71	646.2	527	
Aug-71	650.8	525.8	
Sep-71	650.8	569.1	
Oct-71	655.4	525.8	
Nov-71	655.5	524.7	
Dec-71	657.7	605.5	
Jan-72	657.7	525.8	
Feb-72	662.4	626.3	
Mar-72		536.2	
Apr-72	649.6	614.8	
May-72		531.6	
Jun-72		528.1	
Jul-72	669.5	515.4	
Aug-72		510.8	
Sep-72		501.6	
Oct-72		496.9	
Nov-72		500.4	
Dec-72	620.8	587	
Jan-73	628	591.7	
Feb-73	628	510.8	
Mar-73	620	591.7	
Apr-73	634	600.9	
May-73	593.1	605.5	
Jun-73	574.6	502.7	
Jul-73	567.9	499.3	
Aug-73	556.1	490.1	
Sep-73	542.3	487.7	
Oct-73	551.5	490	
Nov-73	537.7	475	
Dec-73	580.4	570.9	
Jan-74	605.8	486.6	
Feb-74	616.2	479.6	
Mar-74	613.9	477.3	
Apr-74	627.8	487.7	

WATER CONSERVATION – SUMMARY – GROUND WATER

GROUND WATER FLUCTUATION:

Location: Pomona Basin **Ground Surface Elevation: 999.4 ft above MSL**

STATION	3251E	3261P	4469A
	WS Elev.	WS Elev.	WS Elev.
May-74	625.4	488.9	
Jun-74	593.1		
Jul-74	548.1	477.3	
Aug-74	537.7	471.5	
Sep-74	530.7	466.9	
Oct-74		461.1	
Nov-74	557.3	458.8	
Dec-74	585	559.3	
Jan-75	614	579	
Feb-75	619	600.9	
Mar-75	628.9	607.8	
Apr-75	637	614.8	
May-75	641.6	619.4	
Jun-75	632.4	610.1	
Jul-75	576.9	600.9	
Aug-75	553.8	503.9	
Sep-75	540	494.6	
Oct-75	573.5	478.5	
Nov-75	595.4	590.5	
Dec-75	607	600.9	
Jan-76	616.2	603.2	
Feb-76	623.2	605.5	
Mar-76	632.4	617.1	
Apr-76	634.7	619.4	
May-76	641.7	621.7	
Jun-76	572.3	515.4	
Jul-76	553.8	506.2	
Aug-76		567.4	
Sep-76	567.7	570.9	
Oct-76	593.2	587	
Nov-76	602.4	589.4	
Dec-76	608.1	607.8	
Jan-77	604.7	605.5	
Feb-77		610.1	
Mar-77	613.9	617.1	
Apr-77	630.1	617.1	
May-77	570.8	592.8	
Jun-77	579.2	596.3	
Jul-77	559.6		
Aug-77	544.5		
Sep-77	540		
Oct-77	530.7		
Nov-77	549.2		
Dec-77	579.3	559.3	
Jan-78	589.7		

WATER CONSERVATION – SUMMARY – GROUND WATER

GROUND WATER FLUCTUATION:

Location: Pomona Basin **Ground Surface Elevation: 999.4 ft above MSL**

STATION	3251E	3261P	4469A
	WS Elev.	WS Elev.	WS Elev.
Feb-78	593.1		
Mar-78	590.8		
Apr-78	604.7	577.8	
May-78	607		
Jun-78	616.2		
Nov-78	556.2	540.8	
Dec-78	556.2	540.8	
Jan-79	581.6	563.9	
Feb-79	507.6		
Mar-79	509.9		
Apr-79	485	531.6	
May-79	482.2		
Jun-79	484.5		
Jul-79	496.1		
Aug-79	478.8		
Sep-79	479.9		
Oct-79	483.4		
Nov-79	545.8	529.3	
Dec-79	533.1		
Jan-80	590.8	550.1	
Feb-80	600	552.4	
Mar-80	630.1		
Apr-80	641.6	598.6	
May-80	643.9		
Jun-80	611.6		
Jul-80	648.6		
Aug-80	593.1		
Sep-80	581.6		
Oct-80	576.9		
Nov-80	643.9	594	937.7
Dec-80	653.2		
Jan-81	664.7		
Feb-81	646.2	577.8	
Mar-81	677.4		932.7
Apr-81	671.7	624	
May-81	693.6	633.2	
Jun-81	650.9		
Jul-81	648.6		
Aug-81	648.6	610.1	
Sep-81	641.6		888.7
Oct-81	654.3		934.7
Nov-81	645.1		
Dec-81	655.5	562.8	
Jan-82	700.5		
Feb-82	740.9	672.5	

WATER CONSERVATION – SUMMARY – GROUND WATER

GROUND WATER FLUCTUATION:

Location: Pomona Basin **Ground Surface Elevation: 999.4 ft above MSL**

STATION	3251E	3261P	4469A
	WS Elev.	WS Elev.	WS Elev.
Mar-82	743.3		
Apr-82	758.3	695.6	962.7
May-82	727.1		
Jun-82	678.6		
Jul-82	671.7		
Aug-82	670.5		
Sep-82	680.9		
Oct-82	671.7	644.8	952.7
Nov-82	741		
Dec-82	752.5	710.6	
Jan-83	773.3	725.6	
Feb-83	775.6	727.9	
Mar-83	781.4	729.1	
Apr-83	788.3	744.1	
May-83	740.9	727.9	947.7
Jun-83	777.4		966.7
Jul-83	771	710.6	
Oct-83	787.1	737.2	979.7
Nov-83	796.4	687.5	
Dec-83	810.2	684.1	
Jan-84	812.1	774.1	
Feb-84	825.3	704.8	
Apr-84	811.4	661	
May-84	815.6		
Jun-84	811.4	724.5	
Jul-84	823		
Aug-84	825.3		
Sep-84	911.9	771.8	
Oct-84	915.8	783.4	940.7
Nov-84	918.1	815.7	
Dec-84	921.8	693.3	
Jan-85	914.7	799.6	
Feb-85	947.7	771.8	
Mar-85	955.8	820.3	
Apr-85		820.3	933.7
Jun-85			971.7
Oct-85		855	
Nov-85			979.7
Apr-86		843.4	969.7
Aug-86			933.7
Dec-86		809.3	
Aug-87		870.4	
Oct-87		894	957.7
Nov-87		704.7	
Dec-87		817.9	

WATER CONSERVATION – SUMMARY – GROUND WATER

GROUND WATER FLUCTUATION:

Location: Pomona Basin **Ground Surface Elevation: 999.4 ft above MSL**

STATION	3251E	3261P	4469A
	WS Elev.	WS Elev.	WS Elev.
Jan-88		708.6	
Feb-88		700.9	
Mar-88		873.6	
Apr-88		872.4	
May-88		705.7	
Jun-88		698.2	
Dec-88		769.4	
Apr-89		807.5	
Sep-89		810.8	
Oct-89		805.5	976.7
Dec-89		834.1	
Apr-90		799.4	972.7
Oct-90			981.7
Apr-91			979.7
Sep-91		868.2	
Oct-91			971.4
Dec-91		783.3	
Apr-92		790.2	975.7
Oct-92			969.7
Dec-92		842.6	
Mar-93		852.1	
Apr-93		861.8	
May-93		852.5	
Jun-93		858.1	
Aug-93		872.4	
Sep-93		879.2	
Dec-93		891.5	
Jan-94		900.7	
Feb-94		912.6	
Mar-94		893.5	
Apr-94		889.3	
May-94		931.2	
Nov-94		931.5	
Dec-94		939.2	
Jan-95		950.2	
Feb-95		950.8	
Apr-95		920.1	
May-95		931	
Jun-95		943.7	
Jul-95		934.9	
Aug-95		903.1	
Sep-95		920.9	
Oct-95		935.8	
Nov-95		942.6	
Dec-95		940.6	

WATER CONSERVATION – SUMMARY – GROUND WATER

GROUND WATER FLUCTUATION:

Location: Pomona Basin **Ground Surface Elevation: 999.4 ft above MSL**

STATION	3251E	3261P	4469A
	WS Elev.	WS Elev.	WS Elev.
Jan-96		920.9	
Feb-96		947.7	
Mar-96		938.6	
Apr-96		931.9	
May-96		918.3	
Jun-96		913.2	
Jul-96		927	
Aug-96		929.1	
Oct-96		911.8	
Nov-96		945.9	
Dec-96		949.4	
Jan-97		957	
Feb-97		961.4	
Mar-97		960.3	
Apr-97		956.8	
May-97		960.5	
Jun-97		960.6	
Jul-97		957.6	
Aug-97		960.5	
Sep-97		950.5	
Oct-97		957.8	
Nov-97		958	
Feb-98		960.2	
Mar-98		965.5	
Apr-98		959.4	
May-98		965.5	
Jun-98		953.4	
Jul-98		965	
Aug-98		962.3	
Nov-98		966.4	
Dec-98		971.5	
Jan-99		973	
Feb-99		974.7	
Mar-99		973.4	
Apr-99		974.4	
May-99		974	
Jul-99		974.7	
Aug-99		974.6	
Jan-00		938.2	
Mar-00		979.3	
Apr-00		977.8	
May-00		974.9	
Jun-00		973	
Jul-00		972.7	
Aug-00		971.3	

WATER CONSERVATION – SUMMARY – GROUND WATER

GROUND WATER FLUCTUATION:

Location: Pomona Basin **Ground Surface Elevation: 999.4 ft above MSL**

STATION	3251E	3261P	4469A
	WS Elev.	WS Elev.	WS Elev.
Sep-00		970.4	
Oct-00		971.1	
Dec-00		974.3	
Jan-01		974.1	
Mar-01		973.8	
Apr-01		973	
Sep-01		968.5	

WATER CONSERVATION – SUMMARY – GROUND WATER

GROUND WATER FLUCTUATION:

Location: San Fernando Valley, Canoga Park **Ground Surface Elevation: 788.5 ft above MSL**

STATION	4709	3600H
	WS Elev.	WS Elev.
Jan-61	776.2	
Feb-61	776.4	
Mar-61	775.4	
Apr-61	774.8	
May-61	774.2	
Jun-61	773.7	
Jul-61	773	
Aug-61	772.9	
Sep-61	772.5	
Oct-61	772	
Nov-61	771.4	
Dec-61	772.7	
Jan-62	773.3	
Feb-62	774.2	
Mar-62	776	
Apr-62	776.2	
May-62	776.3	
Jun-62	776.2	
Jul-62	775	
Aug-62	773.5	
Sep-62	772.8	
Oct-62	773	
Nov-62	773.3	
Dec-62	772.6	
Jan-63	772.2	
Feb-63	772.2	
Mar-63	772.6	
Apr-63	772.7	
May-63	772.7	
Jun-63	772.6	
Jul-63	771.9	
Aug-63	770.8	
Sep-63	771.6	
Oct-63	772.5	
Nov-63	771.8	
Dec-63	772.6	
Jan-64	773.4	
Feb-64	773.4	
Mar-64	772.5	
Apr-64	772.2	
May-64	772	
Jun-64	771.8	
Jul-64	771.3	
Aug-64	770.9	
Sep-64	770.5	

WATER CONSERVATION – SUMMARY – GROUND WATER

GROUND WATER FLUCTUATION:

Location: San Fernando Valley, Canoga Park **Ground Surface Elevation: 788.5 ft above MSL**

STATION	4709	3600H
	WS Elev.	WS Elev.
Oct-64	770	
Nov-64	770	
Dec-64	769.9	
Jan-65	770.5	
Feb-65	770.3	
Mar-65	770.4	
Apr-65	770.9	
May-65	770.9	
Jun-65	770.4	
Jul-65	769.7	
Aug-65	769.5	
Sep-65	769.2	
Oct-65	768.7	
Nov-65	768.6	
Dec-65	770.6	
Jan-66	771	
Feb-66	772.8	
Mar-66	773	
Apr-66	771.8	
May-66	771.6	
Jun-66	771.5	
Jul-66	771.8	
Aug-66	770.8	
Sep-66	769.8	
Oct-66	770.4	
Nov-66	771.2	
Dec-66	771.9	
Jan-67	772.3	
Feb-67	772.4	
Mar-67	772.8	
Apr-67	772.1	
May-67	772.6	
Jun-67	772.1	
Jul-67	772.1	
Aug-67	772.3	
Sep-67	772.1	
Oct-67	772	
Nov-67	771.8	
Dec-67	772.6	
Jan-68	773	
Feb-68	773	
Mar-68	773.2	
Apr-68	773.4	
May-68	772	
Jun-68	771.1	

WATER CONSERVATION – SUMMARY – GROUND WATER

GROUND WATER FLUCTUATION:

Location: San Fernando Valley, Canoga Park **Ground Surface Elevation: 788.5 ft above MSL**

STATION	4709	3600H
	WS Elev.	WS Elev.
Jul-68	771	
Aug-68	770.7	
Sep-68	770.4	
Oct-68	770.1	
Nov-68	770.1	
Dec-68	770.1	
Jan-69	770.2	
Feb-69	773.4	
Mar-69	773.8	
May-69	773.8	
Jun-69	773.6	
Jul-69	773.5	
Aug-69	773.7	
Sep-69	773.6	
Oct-69	771.8	
Nov-69	773	
Dec-69	772.6	
Jan-70	772.3	
Feb-70	772.5	
Mar-70	773.2	
Apr-70	772.9	
May-70	773	
Jun-70	772.1	
Jul-70	772	
Aug-70	771.9	
Sep-70	771.6	
Oct-70	771.2	
Nov-70	771.7	
Dec-70	772.1	
Jan-71	772.9	
Feb-71	772.1	
Mar-71	771.7	
Apr-71	771.7	
May-71	771.6	
Jun-71	771.4	
Jul-71	771.3	
Oct-71	769.8	
Nov-71	769.7	
Dec-71	769.5	
Jan-72	770.3	
Feb-72	770.6	
Mar-72	770.1	
Apr-72	769.5	
May-72	769.2	
Jun-72	769.1	

WATER CONSERVATION – SUMMARY – GROUND WATER

GROUND WATER FLUCTUATION:

Location: San Fernando Valley, Canoga Park **Ground Surface Elevation: 788.5 ft above MSL**

STATION	4709	3600H
	WS Elev.	WS Elev.
Jul-72	769.5	
Aug-72	769.6	
Sep-72	769.5	
Oct-72	769.5	
Nov-72	769.1	
Dec-72	769.3	
Jan-73	769	
Feb-73	770	
Mar-73	770.2	
Apr-73	770.3	
May-73	770.3	
Jul-73	770.1	
Aug-73	769.8	
Nov-73	768.7	
Dec-73	768.9	
Jan-74	769.6	
Feb-74	769.7	
Mar-74	769.9	
Apr-74	769.9	
May-74	769.7	
Jun-74	769.6	
Jul-74	769.3	
Aug-74	769.1	
Sep-74	769	
Oct-74	768.7	
Nov-74	768.7	
Dec-74	768.7	
Jan-75	768.8	
Feb-75	768.9	
Mar-75	769.1	
Apr-75	769.2	
May-75	769.3	
Jun-75	769.1	
Jul-75	769.3	
Aug-75	768.6	
Sep-75	768.4	
Oct-75	768.2	
Nov-75	768.1	
Dec-75	768.1	
Jan-76	768.1	
Feb-76	768.1	
Apr-76	768.2	
May-76	768.2	
Aug-76	767.4	
Sep-76	767.3	

WATER CONSERVATION – SUMMARY – GROUND WATER

GROUND WATER FLUCTUATION:

Location: San Fernando Valley, Canoga Park **Ground Surface Elevation: 788.5 ft above MSL**

STATION	4709	3600H
	WS Elev.	WS Elev.
Oct-76	767.2	
Nov-76	766.9	
Dec-76	766.7	
Jan-77	766.9	
Feb-77	767	
Mar-77	766.8	
Apr-77	766.9	
Jun-77	766.5	
Jul-77	766.2	
Aug-77	766	
Sep-77	765.8	
Oct-77	765.4	
Nov-77	765.4	
Dec-77	765.2	
Jan-78	765.7	
Feb-78	766.2	
Mar-78	767.5	
Apr-78	767.7	
May-78	767.8	
Jun-78	767.7	
Jul-78	767.6	
Aug-78	767.4	
Sep-78	767.3	
Oct-78	767.2	
Nov-78	767.2	
Dec-78	766.8	
Jan-79	767.4	
Mar-79	768.4	
Apr-79	768.6	
May-79	768.7	
Jun-79	768.7	
Aug-79	768.5	
Sep-79	768.3	
Oct-79	768.4	
Nov-79	768.2	
Dec-79	768.2	
Jan-80	768.5	
Feb-80	769.5	
Mar-80	770	
Nov-80	769.6	
Nov-81	769.3	
Apr-82	769.9	
Nov-82	769.1	
Apr-83	771.1	
Oct-83	771.2	

WATER CONSERVATION – SUMMARY – GROUND WATER

GROUND WATER FLUCTUATION:

Location: San Fernando Valley, Canoga Park **Ground Surface Elevation: 788.5 ft above MSL**

STATION	4709	3600H
	WS Elev.	WS Elev.
Jan-84	771.4	
Feb-84	771.5	
Mar-84	771.5	
Apr-84	771.5	
May-84	771.5	
Jun-84	771.4	
Jul-84	771.2	
Aug-84	771	
Sep-84	770.8	
Oct-84	770.7	
Nov-84	770.4	
Jan-85	770.7	
Feb-85	771	
Mar-85	770.7	
Apr-85	770.7	
May-85	770.6	
Jun-85	770.5	
Jul-85	770.2	
Aug-85	770	
Sep-85	769.9	
Nov-85	769.7	
Dec-85	769.9	
Jan-86	769.9	
Mar-86	770.6	
Apr-86	770.7	
May-86	770.7	
Oct-86	769.9	
Nov-86	769.8	
Dec-86	769.7	
Jan-87	769.6	
Apr-87	769.4	
May-87	769.2	
Jun-87	768.6	
Jul-87	768.9	
Aug-87	768.7	
Sep-87	768.6	
Oct-87	768.4	
Nov-87	768.7	
Dec-87	768.7	
Jan-88	768.7	
Mar-88	768.8	
May-88	768.9	
Jun-88	768.8	
Jul-88	768.6	
Aug-88	768.3	

WATER CONSERVATION – SUMMARY – GROUND WATER

GROUND WATER FLUCTUATION:

Location: San Fernando Valley, Canoga Park **Ground Surface Elevation: 788.5 ft above MSL**

STATION	4709	3600H
	WS Elev.	WS Elev.
Sep-88	768.2	
Oct-88	768.1	
Nov-88	767.8	
Dec-88	767.8	
Feb-89	766.4	
Mar-89	768	
Apr-89	768	
Sep-89	766.6	
Oct-89	766.4	
Nov-89	766.3	
Dec-89	766.3	
Apr-90	766.3	
May-90	766.1	
Jun-90	765.8	
Jul-90	765.5	
Aug-90	765.5	
Sep-90	765.2	
Oct-90	764.7	
Nov-90	764.6	
Dec-90	764.8	
Jan-91	764.8	
Feb-91	764.8	
Mar-91	764.9	
Apr-91	765.2	
May-91	765.2	
Jun-91	765	
Jul-91	764.7	
Aug-91	764.5	
Sep-91	764.3	
Oct-91	764	
Nov-91	763.8	
Dec-91	763.6	
Jan-92	764	
Feb-92	764.4	774.1
Mar-92	765.2	774.6
Apr-92	765.3	
May-92	765.6	775.1
Jun-92	765.6	774.7
Jul-92	765.4	774.1
Aug-92	765.1	774.2
Sep-92	764.9	773.7
Oct-92	764.6	773.5
Nov-92	764.6	773.4
Dec-92	764.7	773.4
Jan-93	765.4	

WATER CONSERVATION – SUMMARY – GROUND WATER

GROUND WATER FLUCTUATION:

Location: San Fernando Valley, Canoga Park **Ground Surface Elevation: 788.5 ft above MSL**

STATION	4709	3600H
	WS Elev.	WS Elev.
Feb-93	766	776.6
Mar-93	766.8	
Apr-93	766.9	
May-93	766.8	776.1
Jun-93	766.7	775.9
Jul-93	766.5	775.3
Aug-93	766.4	774.9
Sep-93	766.4	774.7
Nov-93	766.1	774.2
Dec-93	764.7	774.2
Jan-94	766.2	774.1
Feb-94	766.3	774.2
Mar-94	766	774.1
Apr-94	765.9	
May-94	765.9	
Jun-94	765.8	
Jul-94	765.6	
Aug-94	765.6	773.9
Sep-94	765.1	773.6
Oct-94	765	773.5
Nov-94	765	773.5
Dec-94	764.9	773.3
Jan-95	765.4	773.4
Feb-95	766.1	774.6
Mar-95	766.4	774.9
Apr-95	766.7	
May-95	766.7	774.9
Jun-95	766.7	774.8
Jul-95	destroyed	774.5
Sep-95		774.3
Oct-95		774
Mar-96		773.8
Apr-97		773.5
Apr-99		775.5
Oct-99		774.7
Mar-01		775.2

WATER CONSERVATION – SUMMARY – GROUND WATER

GROUND WATER FLUCTUATION:

Location: San Fernando Valley, Burbank **Ground Surface Elevation: 546.5 ft above MSL**

STATION	3872 H
	WS Elev.
Jul-64	439.8
Oct-64	430.2
Nov-64	430.7
Dec-64	430
Jan-65	433
Feb-65	431.5
Mar-65	431.1
Apr-65	429.8
May-65	427.3
Jul-65	426
Aug-65	425.5
Sep-65	426.7
Oct-65	427.7
Nov-65	425.2
Dec-65	424.9
Jan-66	424.7
Feb-66	425.2
Mar-66	424.7
Apr-66	423
May-66	422
Jun-66	422
Jul-66	418.1
Aug-66	415.3
Sep-66	415.4
Oct-66	414.5
Nov-66	415.7
Dec-66	417.5
Jan-67	414.7
Feb-67	414.2
Mar-67	414.9
Apr-67	414.4
May-67	415
Jun-67	413.8
Jul-67	413.4
Aug-67	413
Sep-67	411.9
Oct-67	412.6
Nov-67	412.1
Dec-67	412.4
Jan-68	413
Feb-68	414
Mar-68	412.8
Apr-68	412.1
May-68	411.6
Jun-68	411.3

WATER CONSERVATION – SUMMARY – GROUND WATER

GROUND WATER FLUCTUATION:

Location: San Fernando Valley, Burbank **Ground Surface Elevation: 546.5 ft above MSL**

STATION	3872 H
	WS Elev.
Jul-68	411.1
Aug-68	410.3
Sep-68	410.9
Oct-68	410.4
Nov-68	412.1
Dec-68	411.7
Jan-69	412.8
Feb-69	420.2
Mar-69	421.3
Apr-69	422.2
May-69	421.7
Jun-69	419.1
Jul-69	414.8
Aug-69	414.2
Sep-69	414.9
Oct-69	415.6
Nov-69	415
Dec-69	416.7
Jan-70	420.4
Feb-70	420.4
Mar-70	420.6
Apr-70	422.7
May-70	421.4
Jun-70	422.4
Jul-70	421.6
Aug-70	421.4
Sep-70	421.7
Oct-70	422
Nov-70	423.3
Dec-70	424.2
Feb-71	421.6
Mar-71	423
Apr-71	427.2
May-71	427.6
Jun-71	428
Jul-71	425.6
Aug-71	425.1
Sep-71	428.2
Oct-71	427.7
Nov-71	429.1
Jan-72	436.5
Feb-72	436.7
May-72	430.4
Jun-72	430.6
Jul-72	429.5

WATER CONSERVATION – SUMMARY – GROUND WATER

GROUND WATER FLUCTUATION:

Location: San Fernando Valley, Burbank **Ground Surface Elevation: 546.5 ft above MSL**

STATION	3872 H
	WS Elev.
Aug-72	428.5
Sep-72	427.2
Oct-72	427.8
Nov-72	429.4
Dec-72	430.6
Jan-73	430.8
Feb-73	431.3
Mar-73	432.6
Apr-73	431.8
May-73	432.1
Jun-73	436.6
Aug-73	436
Sep-73	429.8
Nov-73	436.4
Jan-74	439.2
Feb-74	439.9
Mar-74	439.6
Apr-74	438.8
May-74	439.1
Jun-74	439.9
Jul-74	438.7
Aug-74	438.1
Sep-74	438.2
Oct-74	438.1
Nov-74	438.8
Dec-74	438.7
Jan-75	440.5
Feb-75	440
Mar-75	439.8
Apr-75	440.4
May-75	440.2
Jun-75	441.5
Jul-75	437.5
Sep-75	430.9
Oct-75	435.9
Nov-75	437.1
Dec-75	439.5
Jan-76	440.5
Feb-76	439.7
Mar-76	439.5
Apr-76	440.1
May-76	440.7
Jun-76	440.5
Jul-76	438.3
Aug-76	439

WATER CONSERVATION – SUMMARY – GROUND WATER

GROUND WATER FLUCTUATION:

Location: San Fernando Valley, Burbank **Ground Surface Elevation: 546.5 ft above MSL**

STATION	3872 H
	WS Elev.
Sep-76	438.3
Oct-76	438.8
Nov-76	438.9
Jan-77	439.5
Feb-77	439.9
Mar-77	439.6
Apr-77	439.9
May-77	438.8
Jun-77	435.8
Jul-77	435.7
Aug-77	429.4
Sep-77	427.6
Oct-77	433.7
Nov-77	434.7
Dec-77	432.2
Jan-78	435.7
Mar-78	436.8
Apr-78	437.7
May-78	439.1
Jun-78	439.2
Jul-78	437.4
Aug-78	439.3
Sep-78	439.2
Oct-78	439.7
Nov-78	441.5
Dec-78	445.2
Jan-79	446.4
Feb-79	450
Mar-79	450
Apr-79	450.6
May-79	449.2
Jun-79	451.9
Jul-79	452
Aug-79	452.4
Sep-79	452.9
Oct-79	450.2
Nov-79	456.5
Jan-80	458.8
Mar-80	461.6
Apr-80	462.2
May-80	463.7
Jun-80	465.2
Jul-80	466.7
Aug-80	467
Sep-80	466.4

WATER CONSERVATION – SUMMARY – GROUND WATER

GROUND WATER FLUCTUATION:

Location: San Fernando Valley, Burbank **Ground Surface Elevation: 546.5 ft above MSL**

STATION	3872 H
	WS Elev.
Oct-80	470.2
Dec-80	472.6
Jan-81	474.2
Feb-81	475.6
Mar-81	476.5
Apr-81	477.3
May-81	475.8
Jun-81	476.4
Jul-81	476.2
Aug-81	476.2
Sep-81	471.2
Oct-81	475.4
Dec-81	478.2
Jan-82	478.3
Feb-82	477.9
Mar-82	478.1
Apr-82	479.7
Jun-82	480.2
Jul-82	480.2
Sep-82	480.5
Oct-82	478.5
Nov-82	479.7
Dec-82	479.1
Feb-83	479.7
Mar-83	480.8
Apr-83	481.2
May-83	484.2
Jun-83	483.5
Jul-83	483.7
Aug-83	484
Sep-83	485.4
Oct-83	487.9
Nov-83	487.6
Dec-83	487.2
Jan-84	487.7
Feb-84	490.7
Mar-84	490
Apr-84	491.9
May-84	490.3
Jun-84	489.9
Jul-84	490.3
Aug-84	488.5
Sep-84	487.7
Oct-84	487.8
Nov-84	486

WATER CONSERVATION – SUMMARY – GROUND WATER

GROUND WATER FLUCTUATION:

Location: San Fernando Valley, Burbank **Ground Surface Elevation: 546.5 ft above MSL**

STATION	3872 H
	WS Elev.
Dec-84	486.2
Jan-85	487.4
May-85	489.2
Jun-85	489
Jul-85	488.7
Aug-85	487.9
Sep-85	488.5
Oct-85	487.8
Nov-85	487.6
Dec-85	487.3
Jan-86	487.9
Feb-86	489.3
Mar-86	489.5
Apr-86	489.2
May-86	489.2
Jun-86	488.8
Jul-86	489.2
Aug-86	488.8
Sep-86	488.9
Oct-86	489.3
Nov-86	489.5
Dec-86	489.8
Jan-87	489.2
Feb-87	490.4
Mar-87	490.7
Apr-87	488.9
May-87	489.5
Jun-87	491.4
Aug-87	488
Sep-87	487.1
Oct-87	486.8
Nov-87	486.2
Jan-88	485.2
Feb-88	485
Mar-88	485.4
Apr-88	483.9
May-88	483.4
Jun-88	483
Jul-88	482.1
Aug-88	481.7
Sep-88	481.1
Oct-88	480.9
Nov-88	480.4
Dec-88	480
Jan-89	479.7

WATER CONSERVATION – SUMMARY – GROUND WATER

GROUND WATER FLUCTUATION:

Location: San Fernando Valley, Burbank **Ground Surface Elevation: 546.5 ft above MSL**

STATION	3872 H
	WS Elev.
Feb-89	479.4
Mar-89	478.8
Apr-89	478.5
May-89	477.8
Jun-89	477.6
Jul-89	477.3
Aug-89	476.6
Sep-89	475.9
Oct-89	475.7
Nov-89	475.9
Dec-89	475.8
Jan-90	476.1
Feb-90	476.6
Mar-90	476.9
Apr-90	476.7
May-90	476.6
Jun-90	474.5
Aug-90	473.6
Sep-90	472.8
Oct-90	473.2
Nov-90	472.8
Dec-90	473.9
Jan-91	473.5
Feb-91	473.8
May-91	472.7
Jun-91	472
Jul-91	470.8
Aug-91	471.4
Sep-91	470.6
Oct-91	470.6
Nov-91	469.6
Dec-91	469.7
Jan-92	469.8
Mar-92	469.5
Apr-92	469.5
May-92	469
Jun-92	469
Jul-92	468.4
Nov-92	463.2
Dec-92	461.6
Jul-93	473.7
Sep-93	467
Oct-93	468.4
Nov-93	467.5
Dec-93	468.1

WATER CONSERVATION – SUMMARY – GROUND WATER

GROUND WATER FLUCTUATION:

Location: San Fernando Valley, Burbank **Ground Surface Elevation: 546.5 ft above MSL**

STATION	3872 H
	WS Elev.
Feb-94	479.2
Mar-94	474
Apr-94	472
May-94	480.9
Jun-94	478
Jul-94	473.5
Aug-94	473
Sep-94	473.7
Oct-94	473.7
Nov-94	472.5
Dec-94	476.7
Jan-95	473.7
Feb-95	474.3
Mar-95	474.7
Apr-95	474.5
May-95	474.6
Jun-95	475.1
Jul-95	475.2
Sep-95	475.1
Oct-95	476.6
Nov-95	485.6
Dec-95	477.3
Jan-96	476.7
Feb-96	483.4
Mar-96	484.1
Apr-96	483.3
May-96	477.2
Jun-96	475.9
Jul-96	474.9
Aug-96	474.6
Sep-96	473.4
Oct-96	482
Nov-96	475.4
Dec-96	478.2
Jan-97	483.1
Mar-97	483.1
Apr-97	483.2
May-97	474.7
Jun-97	477.6
Aug-97	478
Sep-97	471.1
Dec-97	477.6
Jan-98	478.6
Feb-98	478.6
Mar-98	479.8

WATER CONSERVATION – SUMMARY – GROUND WATER

GROUND WATER FLUCTUATION:

Location: San Fernando Valley, Burbank **Ground Surface Elevation: 546.5 ft above MSL**

STATION	3872 H
	WS Elev.
Apr-98	471
May-98	470.7
Jun-98	471.3
Jul-98	472.9
Aug-98	471.2
Sep-98	475.2
Oct-98	471.6
Nov-98	471.6
Dec-98	480.5
Mar-99	480
Apr-99	479.4
May-99	472.9
Jun-99	469.9
Jul-99	466.2
Aug-99	469.7
Sep-99	463.1
Dec-99	465.3
Jan-00	468.6
Feb-00	468.2
Mar-00	467.9
May-00	457.7
Jun-00	456.5
Aug-00	464.8
Oct-00	455.5
Nov-00	454.6
Dec-00	454.9
Jan-01	454.1
Feb-01	454.5
Mar-01	463.7
Apr-01	458.8
Jun-01	463.9
Jul-01	463.7
Aug-01	463.4
Sep-01	462.7

WATER CONSERVATION – SUMMARY – GROUND WATER

GROUND WATER FLUCTUATION:

Location: Raymond Basin **Ground Surface Elevation: 749.9 ft above MSL**

STATION	4057 H
	WS Elev.
Jan-52	639.3
Feb-52	642.1
Aug-52	642.3
Sep-52	641.1
Oct-52	640.5
Nov-52	640.1
Dec-52	640.2
Jan-53	641.1
Feb-53	640.1
Mar-53	640.6
Apr-53	641.3
May-53	641.4
Jun-53	641.5
Jul-53	640.2
Aug-53	640.2
Sep-53	640.3
Oct-53	639.4
Nov-53	636.9
Dec-53	639.5
Jan-54	641.9
Mar-54	640.4
Apr-54	639.5
May-54	640.7
Jun-54	637.7
Jul-54	640.4
Aug-54	640.5
Sep-54	638
Oct-54	640.3
Nov-54	640.3
Dec-54	641
Jan-55	638.2
Feb-55	642.3
Mar-55	642
Apr-55	643
May-55	641.1
Jun-55	643.9
Jul-55	644.5
Aug-55	643.8
Sep-55	642.2
Oct-55	644.1
Nov-55	643.4
Dec-55	642.9
Jan-56	644.9
Feb-56	645.1
Mar-56	643.5

WATER CONSERVATION – SUMMARY – GROUND WATER

GROUND WATER FLUCTUATION:

Location: Raymond Basin **Ground Surface Elevation: 749.9 ft above MSL**

STATION	4057 H
	WS Elev.
Apr-56	642.6
May-56	640.2
Jun-56	640.9
Jul-56	642
Aug-56	640.6
Sep-56	639.9
Oct-56	639.5
Nov-56	638.7
Dec-56	638.1
Jan-57	637.9
Feb-57	637.3
Mar-57	637
Apr-57	636.9
May-57	636.4
Jun-57	637.3
Jul-57	640
Aug-57	637.3
Sep-57	635.9
Oct-57	635.1
Nov-57	637.8
Dec-57	638.7
Jan-58	638.7
Feb-58	638.7
Mar-58	636.8
Apr-58	638
May-58	635
Jun-58	633.9
Jul-58	636.1
Aug-58	637
Sep-58	636.4
Oct-58	636.4
Nov-58	635.9
Dec-58	635.7
Jan-59	635.2
Feb-59	635
Mar-59	634.7
Apr-59	634.2
May-59	634
Jun-59	632.8
Jul-59	633
Aug-59	630.8
Sep-59	632.1
Oct-59	631.9
Nov-59	631.3
Dec-59	631.1

WATER CONSERVATION – SUMMARY – GROUND WATER

GROUND WATER FLUCTUATION:

Location: Raymond Basin **Ground Surface Elevation: 749.9 ft above MSL**

STATION	4057 H
	WS Elev.
Jan-60	630.7
Feb-60	630.4
Mar-60	630.1
Apr-60	629.8
May-60	629.7
Jun-60	629.6
Jul-60	629.3
Aug-60	629.1
Sep-60	626.1
Oct-60	616.1
Nov-60	628
Dec-60	627.7
Jan-61	626.7
Feb-61	627.4
Mar-61	626.7
Apr-61	626.6
May-61	625.8
Jun-61	625.7
Jul-61	625.4
Aug-61	624.9
Sep-61	624.3
Oct-61	623.9
Nov-61	622.4
Dec-61	622.4
Jan-62	622.7
Feb-62	622.6
Mar-62	622.2
Apr-62	619.3
May-62	618.4
Jun-62	616.2
Jul-62	618.4
Aug-62	618.6
Sep-62	618.5
Oct-62	618.4
Nov-62	617.9
Dec-62	617.7
Jan-63	617.2
Feb-63	616.7
Mar-63	616.5
Apr-63	616
May-63	614.1
Jun-63	614.5
Jul-63	614.8
Aug-63	614.1
Sep-63	613.6

WATER CONSERVATION – SUMMARY – GROUND WATER

GROUND WATER FLUCTUATION:

Location: Raymond Basin **Ground Surface Elevation: 749.9 ft above MSL**

STATION	4057 H
	WS Elev.
Oct-63	610.8
Nov-63	611.7
Dec-63	612.1
Jan-64	611.3
Feb-64	610.9
Mar-64	610.9
Apr-64	610.3
May-64	609.9
Jun-64	608.9
Jul-64	608.9
Aug-64	607.8
Sep-64	607.9
Oct-64	607.7
Nov-64	607.3
Dec-64	606.2
Jan-65	606.2
Feb-65	606
Mar-65	605.6
Apr-65	605.4
May-65	605.2
Jun-65	604.9
Jul-65	604.7
Aug-65	604.4
Sep-65	604.1
Oct-65	603.7
Nov-65	603.3
Dec-65	602.9
Jan-66	602.4
Feb-66	602.2
Mar-66	601.8
Apr-66	601.4
May-66	598.3
Jun-66	600.8
Jul-66	596.9
Aug-66	593.9
Sep-66	591.8
Oct-66	591
Nov-66	590.2
Dec-66	588.8
Jan-67	587.8
Feb-67	587
Mar-67	586.6
Apr-67	585.9
May-67	585.4
Jun-67	584.9

WATER CONSERVATION – SUMMARY – GROUND WATER

GROUND WATER FLUCTUATION:

Location: Raymond Basin **Ground Surface Elevation: 749.9 ft above MSL**

STATION	4057 H
	WS Elev.
Jul-67	583.2
Aug-67	584.5
Sep-67	584.1
Oct-67	583.7
Nov-67	583.6
Dec-67	583.3
Jan-68	582.9
Feb-68	582.5
Mar-68	582.7
Apr-68	582.7
May-68	582.1
Jun-68	581.6
Jul-68	581.4
Aug-68	581.9
Sep-68	581.4
Oct-68	581.3
Nov-68	581.5
Dec-68	581.1
Jan-69	580.4
Feb-69	581.3
Mar-69	581.4
Apr-69	581.1
May-69	581.3
Jun-69	581.6
Jul-69	578.9
Aug-69	578.5
Sep-69	584.1
Oct-69	584.5
Nov-69	585.2
Dec-69	585.9
Jan-70	586.5
Feb-70	586.9
Mar-70	587.4
Apr-70	587.7
May-70	588.2
Jun-70	588.3
Jul-70	588.6
Aug-70	588
Sep-70	587.9
Oct-70	589.9
Nov-70	590.3
Dec-70	591.7
Jan-71	590.9
Feb-71	591.4
Mar-71	591.3

WATER CONSERVATION – SUMMARY – GROUND WATER

GROUND WATER FLUCTUATION:

Location: Raymond Basin **Ground Surface Elevation: 749.9 ft above MSL**

STATION	4057 H
	WS Elev.
Apr-71	592.1
May-71	592.9
Jun-71	593.4
Jul-71	592.9
Aug-71	594.5
Sep-71	595.1
Oct-71	591.5
Nov-71	595.9
Dec-71	596.1
Jan-72	596.4
Feb-72	596.8
Mar-72	596.9
Apr-72	596.6
May-72	596.1
Jun-72	596.8
Jul-72	597.3
Aug-72	597.4
Sep-72	597.7
Oct-72	598.1
Nov-72	598.6
Dec-72	598.7
Jan-73	598.9
Feb-73	599.1
Mar-73	599.2
Apr-73	599.6
May-73	599.7
Jun-73	595.9
Jul-73	600.2
Aug-73	600.6
Sep-73	600.8
Oct-73	600.8
Nov-73	601.3
Dec-73	601.6
Jan-74	602
Feb-74	602.3
Mar-74	601.1
Apr-74	602.7
May-74	604.2
Jun-74	603.2
Jul-74	603.4
Aug-74	604.3
Sep-74	604.4
Oct-74	604.9
Nov-74	604.8
Dec-74	599.7

WATER CONSERVATION – SUMMARY – GROUND WATER

GROUND WATER FLUCTUATION:

Location: Raymond Basin **Ground Surface Elevation: 749.9 ft above MSL**

STATION	4057 H
	WS Elev.
Jan-75	604.2
Feb-75	604
Mar-75	604.7
Apr-75	605.6
May-75	604
Jun-75	603.6
Jul-75	605.1
Aug-75	603.3
Sep-75	603.2
Oct-75	604.8
Nov-75	603.8
Dec-75	602.8
Jan-76	602.3
Feb-76	602.5
Mar-76	602
Apr-76	601.9
May-76	601.6
Jun-76	601.6
Jul-76	601.4
Aug-76	601.3
Sep-76	601.5
Oct-76	601.6
Nov-76	601.2
Dec-76	601.2
Jan-77	601
Feb-77	600.9
Mar-77	600.9
Apr-77	600.8
May-77	600.6
Jun-77	604.4
Jul-77	600.3
Aug-77	599.4
Sep-77	599.9
Oct-77	609.7
Nov-77	599
Dec-77	599
Jan-78	597.1
Feb-78	598.1
Mar-78	597.9
May-78	597.6
Jun-78	597.5
Aug-78	597.9
Sep-78	598.8
Oct-78	597.9
Dec-78	598

WATER CONSERVATION – SUMMARY – GROUND WATER

GROUND WATER FLUCTUATION:

Location: Raymond Basin **Ground Surface Elevation: 749.9 ft above MSL**

STATION	4057 H
	WS Elev.
Mar-79	598.2
Jul-79	598.2
Oct-79	598.4
Dec-79	598.7
Apr-80	598
Aug-80	597.8
Nov-80	597.3
Jan-81	597.1
Mar-81	597.1
Apr-81	598.9
May-81	597
Jun-81	597.1
Aug-81	597.3
Sep-81	597.6
Nov-81	597.9
Feb-82	598.4
Apr-82	600.9
May-82	598.9
Jun-82	598.7
Jul-82	598.9
Aug-82	590
Sep-82	588.3
Oct-82	598.9
Nov-82	602.9
Dec-82	591.9
Jan-83	592.6
Feb-83	598.4
Mar-83	598
Apr-83	597.8
May-83	597.7
Jun-83	597.4
Jul-83	597.4
Aug-83	597.4
Sep-83	597.6
Oct-83	597.5
Nov-83	597.2
Dec-83	597.5
Jan-84	597.6
Feb-84	597.3
Mar-84	597.3
Apr-84	597.3
May-84	597.3
Jun-84	596.9
Jul-84	597.4
Aug-84	595.9

WATER CONSERVATION – SUMMARY – GROUND WATER

GROUND WATER FLUCTUATION:

Location: Raymond Basin **Ground Surface Elevation: 749.9 ft above MSL**

STATION	4057 H
	WS Elev.
Sep-84	596.1
Oct-84	599
Nov-84	595.9
Dec-84	591.4
Jan-85	596.4
Feb-85	595.9
Mar-85	596.4
Apr-85	598
May-85	596.4
Jun-85	595.9
Jul-85	596.9
Aug-85	596.1
Sep-85	595.9
Oct-85	593.9
Dec-85	597.4
Jan-86	597.4
Mar-86	596.4
Apr-86	592.9
May-86	615.4
Jun-86	596.9
Jul-86	596.9
Aug-86	593.4
Sep-86	603.9
Oct-86	593.4
Nov-86	597.4
Dec-86	579
Jan-87	592.4
Feb-87	594.9
Mar-87	594.9
Apr-87	585.3
May-87	597.1
Jun-87	597.2
Jul-87	590.4
Aug-87	596
Sep-87	595.9
Oct-87	595.2
Nov-87	594.7
Dec-87	594.5
Jan-88	593.9
Feb-88	593.3
Mar-88	592.8
Apr-88	592.6
May-88	592.3
Jun-88	591.8
Jul-88	591.7

WATER CONSERVATION – SUMMARY – GROUND WATER

GROUND WATER FLUCTUATION:

Location: Raymond Basin **Ground Surface Elevation: 749.9 ft above MSL**

STATION	4057 H
	WS Elev.
Aug-88	591.5
Sep-88	591.2
Oct-88	590.9
Nov-88	590.8
Dec-88	590.4
Jan-89	590.1
Feb-89	589.8
Mar-89	589.3
Apr-89	589.1
May-89	589
Jun-89	588.8
Jul-89	588.4
Aug-89	588.2
Sep-89	587.9
Oct-89	583.2
Nov-89	587.2
Dec-89	587.1
Jan-90	586.7
Feb-90	586.4
Mar-90	586.4
Apr-90	582.4
May-90	586
Jun-90	584
Jul-90	585.9
Aug-90	580.6
Sep-90	585.8
Oct-90	585.8
Nov-90	585.8
Dec-90	585.8
Jan-91	585.8
Feb-91	585.9
Apr-91	581.2
May-91	586.3
Jun-91	586.5
Jul-91	586.8
Aug-91	574.8
Sep-91	587.9
Oct-91	586.7
Nov-91	586.6
Dec-91	586.6
Jan-92	586.6
Mar-92	586.7
Apr-92	586.8
May-92	587.1
Jun-92	587.1

WATER CONSERVATION – SUMMARY – GROUND WATER

GROUND WATER FLUCTUATION:

Location: Raymond Basin **Ground Surface Elevation: 749.9 ft above MSL**

STATION	4057 H
	WS Elev.
Jul-92	581.6
Aug-92	577
Sep-92	570
Oct-92	589
Nov-92	589
Dec-92	589
Feb-93	579.9
Mar-93	584.1
Apr-93	577.7
May-93	573.7
Jun-93	569.9
Aug-93	572.7
Sep-93	594.4
Oct-93	576.4
Nov-93	585.6
Dec-93	577.2
Jan-94	598.4
Feb-94	597.9
Mar-94	598.4
Apr-94	598.4
May-94	600.1
Jun-94	600.9
Jul-94	601.9
Aug-94	602.4
Sep-94	603.2
Oct-94	604
Nov-94	604.9
Dec-94	608.4
Jan-95	609.2
Feb-95	609.7
Mar-95	609.9
Apr-95	583.2
May-95	611.1
Jun-95	611.9
Jul-95	612.4
Aug-95	612.7
Sep-95	613.2
Oct-95	613.2
Dec-95	613.7
Jan-96	613.9
Feb-96	614.2
Mar-96	614.4
Apr-96	614.5
May-96	614.8
Jun-96	615

WATER CONSERVATION – SUMMARY – GROUND WATER

GROUND WATER FLUCTUATION:

Location: Raymond Basin **Ground Surface Elevation: 749.9 ft above MSL**

STATION	4057 H
	WS Elev.
Jul-96	615.1
Aug-96	616.2
Sep-96	615.1
Oct-96	614.7
Nov-96	614.8
Dec-96	614.4
Jan-97	614.5
Feb-97	614.6
Mar-97	614.5
Apr-97	614.8
May-97	614.9
Jun-97	615.1
Jul-97	613.7
Aug-97	615.2
Sep-97	615.1
Dec-97	614.9
Jan-98	614.7
Feb-98	614.8
Mar-98	614.9
May-98	615.2
Jun-98	615.4
Jul-98	615.5
Aug-98	615.4
Sep-98	615.1
Oct-98	614.7
Nov-98	614.4
Dec-98	614.1
Jan-99	613.8
Feb-99	613.4
Mar-99	613.5
Apr-99	613.5
May-99	613.1
Jun-99	613.1
Jul-99	612.9
Aug-99	612.8
Sep-99	612.9
Jan-01	613.4
Feb-01	613.6
Mar-01	613.9
Apr-01	613.9
Jun-01	615.5
Jul-01	686.7
Aug-01	615.3
Sep-01	615.5

WATER CONSERVATION – SUMMARY – GROUND WATER

GROUND WATER FLUCTUATION:

Location: San Gabriel Canyon Basin, North of Azusa **Ground Surface Elevation: 658.8 ft above MSL**

STATION	4284 A	4285
	WS Elev.	WS Elev.
Jan-64	602.1	597.9
Feb-64	611.9	610.5
Mar-64	616.9	608.4
Apr-64	619.8	616
May-64	631.3	630.7
Jun-64	623.1	617.6
Jul-64	611.4	605
Aug-64	606.3	602.7
Sep-64	606.7	605.9
Oct-64	614.6	613.1
Nov-64	613.3	606.9
Dec-64	612.4	599
Jan-65	613.7	610.3
Feb-65	611.7	606.2
Mar-65	593.6	583.8
Apr-65	591.9	575.7
May-65	642.7	633.3
Jun-65	653.1	635.3
Jul-65	651.9	639.5
Aug-65	653.1	639.3
Sep-65	654.7	638.4
Oct-65	652.2	641.6
Nov-65	656.1	632.8
Dec-65	662.8	638.1
Jan-66	665	650.7
Feb-66	659.8	654.8
Mar-66	665.7	647.1
Apr-66	644.4	639.9
May-66	644.4	634.1
Jun-66		623.8
Jul-66	631.8	621.9
Aug-66	630.1	
Sep-66	629.7	
Oct-66	639	
Nov-66	639.8	
Dec-66	639.2	651.3
Jan-67	658.9	648.9
Feb-67	671.4	657.3
Mar-67	660.7	645.1
Apr-67	660.9	643.5
May-67	653.4	645.4
Jun-67	651.3	639.7
Jul-67	644.6	634.1
Aug-67	644.6	617.3
Sep-67	619.7	597.9

WATER CONSERVATION – SUMMARY – GROUND WATER

GROUND WATER FLUCTUATION:

Location: San Gabriel Canyon Basin, North of Azusa **Ground Surface Elevation: 658.8 ft above MSL**

STATION	4284 A	4285
	WS Elev.	WS Elev.
Oct-67	622.3	617.5
Nov-67	642	627.1
Dec-67	632.3	632.1
Jan-68	654.9	648.4
Feb-68	644.4	642.4
Mar-68	642.7	639.9
Apr-68	651	644.1
May-68	635.7	632.1
Jun-68	626.5	620.6
Jul-68	624.6	620.3
Aug-68	639.7	618.9
Sep-68	606.4	602.5
Oct-68	601.6	
Nov-68	629.6	594
Dec-68	582.9	573.5
Jan-69	599.2	578.5
Feb-69	642.2	620.1
Mar-69	652.7	638
Apr-69	649.3	631.6
May-69	656.9	644
Jun-69	662.6	653
Jul-69	659.8	647.1
Aug-69	652.3	650.1
Sep-69	631.3	638.3
Oct-69	631.3	629.6
Nov-69	631.9	625.7
Dec-69	649.2	641.5
Jan-70	656.6	647.5
Feb-70	649.7	639.5
Mar-70	645	641.9
Apr-70	663.5	649.3
May-70	642.8	644.3
Jun-70	641.3	631.1
Jul-70	630.8	617.5
Aug-70	622.6	595.5
Sep-70	611.6	597.8
Oct-70	609.2	595.5
Nov-70	611.1	594.2
Dec-70	611.8	612
Jan-71	661.5	647.7
Feb-71	664	650.7
Mar-71	662.9	647.6
Apr-71	648.4	642.7
May-71	652.9	626.5
Jun-71	619.4	605.6

WATER CONSERVATION – SUMMARY – GROUND WATER

GROUND WATER FLUCTUATION:

Location: San Gabriel Canyon Basin, North of Azusa **Ground Surface Elevation: 658.8 ft above MSL**

STATION	4284 A	4285
	WS Elev.	WS Elev.
Jul-71	606.4	589.2
Aug-71	598	578.3
Sep-71	595.9	572.9
Oct-71	597.3	575.9
Nov-71	593.4	577.7
Dec-71	586.6	566.3
Jan-72	600.9	571.6
Feb-72	654.4	644.9
Mar-72	647.9	645.4
Apr-72	630	622.7
May-72	605	594.7
Jun-72	596.4	582.3
Jul-72	574.6	558.4
Aug-72	558.2	547.5
Sep-72	556.2	548.9
Oct-72	553.9	537.9
Nov-72	555.4	525.3
Dec-72	627.5	599.6
Jan-73	621.3	
Feb-73	639.3	605.1
Mar-73	664	646.3
Apr-73	664.1	649.8
May-73	661.2	651.3
Jun-73	643.4	645.7
Jul-73	642.4	626.8
Aug-73	642.2	622
Sep-73	633.4	617.7
Oct-73	629.9	611.6
Nov-73	635.9	619.4
Dec-73	653.2	637.2
Jan-74	660.7	639.2
Feb-74		649.1
Mar-74	656.2	630.1
Apr-74		642.1
May-74	653.2	642.4
Jun-74		631.4
Jul-74		635.3
Aug-74	642.2	631.1
Sep-74	639.1	622.9
Oct-74	636.7	622.8
Nov-74	626.1	626
Dec-74		608.5
Jan-75	614.2	601.4
Feb-75	611.9	597
Mar-75	622.2	614.7

WATER CONSERVATION – SUMMARY – GROUND WATER

GROUND WATER FLUCTUATION:

Location: San Gabriel Canyon Basin, North of Azusa **Ground Surface Elevation: 658.8 ft above MSL**

STATION	4284 A	4285
	WS Elev.	WS Elev.
Apr-75	629.7	637.6
May-75	660.2	636.4
Jun-75	658.9	632.6
Jul-75	639.9	627.7
Aug-75	629.2	617
Sep-75	629.2	605.9
Oct-75	631	608.8
Nov-75		616.3
Dec-75	620.1	593
Jan-76	619.7	580
Feb-76	602.6	576.3
Mar-76	635.1	601.4
Apr-76	649.3	643
May-76	630.7	614.7
Jun-76	608.5	601.7
Jul-76	607.9	595.8
Aug-76	608.9	596.8
Sep-76	605.6	590.5
Oct-76	638.3	600.8
Nov-76		617.3
Dec-76	600.7	601.4
Jan-77	608.1	579.7
Feb-77	647.7	629
Mar-77	607	598.6
Apr-77	595.2	584.9
May-77	592.4	585.1
Jun-77	597.1	584.5
Jul-77	598.3	582.4
Aug-77	593.1	578.8
Sep-77	596.9	575.9
Oct-77	600.3	582.6
Nov-77	598.1	579.4
Dec-77	632.3	588.6
Jan-78	639.4	628.3
Feb-78	656.6	643.2
Mar-78	666	646.5
Apr-78	659	642.8
May-78	654.5	648
Jun-78	654.5	642.5
Jul-78	650.4	636.7
Aug-78	641.8	634.7
Sep-78	642.8	619.1
Oct-78	639	625.3
Nov-78	628	619
Dec-78	632.7	616.1

WATER CONSERVATION – SUMMARY – GROUND WATER

GROUND WATER FLUCTUATION:

Location: San Gabriel Canyon Basin, North of Azusa **Ground Surface Elevation: 658.8 ft above MSL**

STATION	4284 A	4285
	WS Elev.	WS Elev.
Jan-79	644.3	640.2
Feb-79	651.1	641.9
Mar-79	647.9	637.1
Apr-79	649	639.1
May-79	646.2	627
Jun-79	642.1	
Jul-79	637.7	625.9
Aug-79	631.1	
Sep-79	622.4	611
Oct-79	624.8	
Nov-79	621.9	610.1
Dec-79	628.9	610.1
Jan-80	615.4	
Feb-80	628.5	612.3
Mar-80	648.5	634.6
Apr-80	651.8	637.2
May-80	652.2	644.5
Jun-80	650.6	637.2
Jul-80	649.1	628.3
Aug-80	641.2	630.3
Sep-80	640.6	619.8
Oct-80	643.6	620.1
Nov-80	664	625.7
Dec-80	637.5	623.3
Jan-81	631.8	622.1
Feb-81	624.8	607.4
Mar-81	623.9	608.1
Apr-81	638	606.4
May-81	615	590
Jun-81	607.2	575.9
Jul-81	584.5	556.9
Aug-81	578.3	555
Sep-81	584.2	555.6
Oct-81	582.4	566.2
Nov-81	598.3	577.6
Dec-81	606	594.1
Jan-82	623.7	610.1
Feb-82	630.7	620.1
Mar-82	636.4	625.8
Apr-82	637.3	620.3
May-82	635.9	608.7
Jun-82	626.4	613.4
Jul-82	636.5	606.4
Aug-82	620.5	596.7
Sep-82	617.1	604.2

WATER CONSERVATION – SUMMARY – GROUND WATER

GROUND WATER FLUCTUATION:

Location: San Gabriel Canyon Basin, North of Azusa **Ground Surface Elevation: 658.8 ft above MSL**

STATION	4284 A	4285
	WS Elev.	WS Elev.
Oct-82	628	620.2
Nov-82	637	622
Dec-82	639.6	632
Jan-83	636	628.4
Feb-83	647.2	629.7
Mar-83	652.4	640.4
Apr-83	652.3	640.2
May-83	651.6	641.4
Jun-83	651.3	634.5
Jul-83	647.8	631.6
Aug-83	641	622.3
Sep-83	630.6	613.5
Oct-83	631.7	615.3
Nov-83	646.6	631.7
Dec-83	645.2	632.9
Jan-84	643.3	628.8
Feb-84	642.9	636
Mar-84	639.8	626.4
Apr-84	626.4	621.3
May-84	617.7	
Jun-84	600.8	589.9
Jul-84	596.5	
Aug-84	579.9	572.3
Sep-84	572	567.3
Oct-84		563.3
Nov-84	573.4	562
Dec-84	570	558.5
Jan-85	609.4	565.7
Feb-85	642.8	627.6
Mar-85		622.3
Apr-85	597	
Jun-85	618.7	
Jul-85	612.3	599.6
Aug-85	594	573.8
Sep-85	588.3	
Oct-85	621	571.8
Nov-85	629.2	619.6
Dec-85	643.7	623.5
Jan-86	647.7	630.8
Feb-86	651.3	634.9
Mar-86	648.3	638.4
Apr-86	645.7	637.9
May-86	646.6	635.3
Jun-86	639.4	625.7
Jul-86	623.3	606.3

WATER CONSERVATION – SUMMARY – GROUND WATER

GROUND WATER FLUCTUATION:

Location: San Gabriel Canyon Basin, North of Azusa **Ground Surface Elevation: 658.8 ft above MSL**

STATION	4284 A	4285
	WS Elev.	WS Elev.
Aug-86	616.9	599.9
Sep-86	598.5	
Oct-86	587.4	605.3
Nov-86	594	585.8
Dec-86	610.6	599.9
Jan-87	626.3	608.1
Feb-87	635.2	630.4
Mar-87	651	629.2
Apr-87	647.9	632.2
May-87	636.4	
Jun-87	610.5	592.6
Jul-87	597.1	583
Aug-87	580.8	570.8
Sep-87	574	559.7
Oct-87	608	552.3
Nov-87	600.1	553.4
Dec-87	610.8	593.8
Jan-88	627.4	624.2
Feb-88	640	632.9
Mar-88	641.3	638.2
Apr-88	635.2	625.9
May-88	632.5	
Jun-88	641.6	
Aug-88	611.8	
Sep-88	605.6	
Oct-88	619	
Nov-88	612.4	605.1
Dec-88	616.3	
Jan-89	640.8	
May-89	653	
Aug-89	646.2	
Sep-89	644.9	
Oct-89	601	
Mar-90		620.1
Apr-90	650	
Oct-90	631	
Apr-91	643	636.6
May-91	636	
Jun-91	623	
Jul-91	629	
Aug-91	637	
Sep-91	641	629.4
Oct-91	635	
Nov-91	624	
Dec-91	616	

WATER CONSERVATION – SUMMARY – GROUND WATER

GROUND WATER FLUCTUATION:

Location: San Gabriel Canyon Basin, North of Azusa **Ground Surface Elevation: 658.8 ft above MSL**

STATION	4284 A	4285
	WS Elev.	WS Elev.
Jan-92	619	
Feb-92	630	
Mar-92	642	619.3
Apr-92	650	599.1
Oct-92	629	
Nov-92		606.1
Mar-93		634.5
Apr-93	647	633.3
Oct-93	619	
May-94	591	
Nov-94	592.9	
May-95	591	
Nov-99	607	
May-00	646	
Mar-01	621	

WATER CONSERVATION – SUMMARY – GROUND WATER

GROUND WATER FLUCTUATION:

Location: Upper Claremont Heights **Ground Surface Elevation: 1482.0 ft above MSL**

STATION	4508 B	4508 A
	WS Elev.	WS Elev.
Jan-60	1328.5	
Feb-60	1329.9	
Mar-60	1329	
Apr-60	1318.5	
May-60	1323.5	
Jun-60	1307.6	
Jul-60	1302.3	
Aug-60	1298.2	
Sep-60	1290.5	
Oct-60	1295.9	
Nov-60	1284.4	
Dec-60	1298.8	
Jan-61	1289.7	
Feb-61	1294.9	
Mar-61	1285.6	
Apr-61	1276.5	
May-61	1279	
Jun-61	1276	
Jul-61	1273.3	
Aug-61	1271	
Sep-61	1268	
Oct-61	1265.6	
Nov-61	1263.4	
Dec-61	1265.4	
Jan-62	1265.6	
Feb-62	1268.6	
Mar-62	1270.2	
Apr-62	1269.1	
May-62	1269.5	
Jun-62	1266.8	
Dec-62	1258.2	
Jan-63	1259.4	
Feb-63	1262.7	
Mar-63	1265.4	
Apr-63	1268.6	
May-63	1271.7	
Jun-63	1267.2	
Jul-63	1264.1	
Aug-63	1262.2	
Sep-63	1261.1	
Oct-63	1261	
Nov-63	1260.3	
Dec-63	1262.5	
Jan-64	1261.9	
Feb-64	1263.7	

WATER CONSERVATION – SUMMARY – GROUND WATER

GROUND WATER FLUCTUATION:

Location: Upper Claremont Heights **Ground Surface Elevation: 1482.0 ft above MSL**

STATION	4508 B	4508 A
	WS Elev.	WS Elev.
Mar-64	1262.3	
Apr-64	1263.5	
May-64	1261.9	
Jun-64	1258.8	
Aug-64	1253.2	
Sep-64	1251.9	
Oct-64	1250.3	
Nov-64	1248.2	
Dec-64	1248.6	
Jan-65	1246.9	
Feb-65	1250.8	
Mar-65	1251	
Apr-65	1251.9	
May-65	1251.9	
Jun-65	1252.1	
Jul-65	1250	
Aug-65	1247.4	
Sep-65	1246.1	
Oct-65	1244.3	
Nov-65	1247	
Dec-65	1244.8	
Jan-66	1245	
Feb-66	1247.6	
Mar-66	1253.1	
Apr-66	1288.3	
May-66	1320.4	
Jun-66	1338	
Jul-66	1351.7	
Aug-66	1355.8	
Sep-66	1357.7	
Oct-66	1350.8	
Nov-66	1348	
Dec-66	1346.9	
Jan-67	1349	
Feb-67	1355.3	
Mar-67	1363.2	
Apr-67	1371.1	
May-67	1381.4	
Jun-67	1386.3	
Jul-67	1401	
Aug-67	1404.1	
Sep-67	1402.2	
Oct-67	1395.8	
Nov-67	1391.8	
Dec-67	1387.6	

WATER CONSERVATION – SUMMARY – GROUND WATER

GROUND WATER FLUCTUATION:

Location: Upper Claremont Heights **Ground Surface Elevation: 1482.0 ft above MSL**

STATION	4508 B	4508 A
	WS Elev.	WS Elev.
Jan-68	1385.4	
Feb-68	1382.5	
Mar-68	1380.2	
Apr-68	1377.9	
May-68	1372	
Jun-68	1373.3	
Jul-68	1363.2	
Aug-68	1358.3	
Sep-68	1352.3	
Oct-68	1346.9	
Nov-68	1342.8	
Dec-68	1339.8	
Jan-69	1339.7	
Mar-69	1341.8	
Apr-69	1373.1	
May-69	1424.9	
Jun-69	1454.9	
Jul-69	1447.4	
Aug-69	1444.5	
Sep-69	1431.4	
Oct-69	1422.2	
Nov-69	1411.4	
Dec-69	1405.7	
Jan-70	1399.1	
Feb-70	1395.2	
Mar-70	1391	
Apr-70	1388.4	
May-70	1383.2	
Jun-70	1378.2	
Jul-70	1376	
Aug-70	1378.1	
Sep-70	1363.1	
Oct-70	1359.8	
Nov-70	1354.1	
Dec-70	1351.2	
Jan-71	1352	
Feb-71	1352.1	
Mar-71	1352	
Apr-71	1349.8	
May-71	1337	
Jun-71	1330.1	
Jul-71	1325.3	
Aug-71	1326.6	
Sep-71	1312.1	
Oct-71	1310.5	

WATER CONSERVATION – SUMMARY – GROUND WATER

GROUND WATER FLUCTUATION:

Location: Upper Claremont Heights **Ground Surface Elevation: 1482.0 ft above MSL**

STATION	4508 B	4508 A
	WS Elev.	WS Elev.
Nov-71	1319.6	
Dec-71	1318.8	
Jan-72	1319.3	
Feb-72	1319.6	
Mar-72	1314.7	
Apr-72	1299.8	
May-72	1311	
Jun-72	1297.7	
Jul-72	1292.4	
Aug-72	1290.1	
Sep-72	1287.3	
Oct-72	1287.6	
Nov-72	1286.5	
Dec-72	1296.1	
Jan-73	1298.2	
Feb-73	1300	
Mar-73	1302.1	
Apr-73	1303.7	
May-73	1298.1	
Jun-73	1304.8	
Jul-73	1302.2	
Aug-73	1297.4	
Oct-73	1314.9	
Nov-73	1308.3	
Dec-73	1322.4	
Jan-74	1333.4	
Feb-74	1332.7	
Mar-74	1335.3	
Apr-74	1336.3	
May-74	1327.3	
Jun-74	1325.5	
Jul-74	1323	
Aug-74	1322.5	
Sep-74	1312.1	
Oct-74	1306.5	
Nov-74	1319.2	
Dec-74	1321.9	
Jan-75	1323.1	
Feb-75	1322.5	
Mar-75	1322.9	
Apr-75	1324.7	
May-75	1324.1	
Jun-75	1314.3	
Jul-75	1305.2	
Aug-75	1301.1	

WATER CONSERVATION – SUMMARY – GROUND WATER

GROUND WATER FLUCTUATION:

Location: Upper Claremont Heights **Ground Surface Elevation: 1482.0 ft above MSL**

STATION	4508 B	4508 A
	WS Elev.	WS Elev.
Sep-75	1299.2	
Oct-75	1303.6	
Nov-75	1303.6	
Dec-75	1301.1	
Jan-76	1296.9	
Feb-76	1293.7	
Mar-76	1306.3	
Apr-76	1306.2	
May-76	1296.4	
Jun-76	1294.2	
Jul-76	1289	
Aug-76	1286.4	
Sep-76	1286.5	
Oct-76	1286.1	
Nov-76	1285.9	
Dec-76	1293.2	
Jan-77	1294.5	
Feb-77	1287.7	
Mar-77	1290.9	
Apr-77	1297.4	
May-77	1294.3	
Jun-77	1288.1	
Jul-77	1286	
Aug-77	1282.2	
Sep-77	1282	
Oct-77	1281.7	
Nov-77	1280.6	
Jan-78	1290.6	
Feb-78	1293.2	
Mar-78	1297.8	
Apr-78	1361.1	
May-78	1436.2	1438
Jun-78	1449.2	1443.1
Jul-78	1429.4	1434.2
Aug-78	1436.6	1437
Sep-78		1443
Oct-78	1420.5	1408
Dec-78	1408.1	1397
Jan-79	1401.6	1385
Feb-79	1396.6	1391
Mar-79	1393.3	1385
Apr-79	1387.3	1381
May-79	1383.5	1376
Jun-79	1380.4	1374
Aug-79	1388.1	1383

WATER CONSERVATION – SUMMARY – GROUND WATER

GROUND WATER FLUCTUATION:

Location: Upper Claremont Heights **Ground Surface Elevation: 1482.0 ft above MSL**

STATION	4508 B	4508 A
	WS Elev.	WS Elev.
Sep-79		1382
Oct-79	1384.2	1380
Nov-79	1381.9	1380
Dec-79	1379.1	1373.5
Jan-80	1376.8	
Feb-80		1373.5
Mar-80	1386.2	1385
Apr-80	1430.3	1430
May-80	1446.3	
Jul-80	1445.5	
Aug-80	1430.7	
Sep-80	1422.3	1408
Oct-80	1408.9	1402
Dec-80	1394.2	1387
Jan-81	1389.3	1382.5
Feb-81	1385.4	
Mar-81	1383.8	1380
Apr-81	1376.6	1368.5
May-81		1368.5
Sep-81		1344
Oct-81		1344
Nov-81		1342
Dec-81		1340
Jan-82		1339.5
Feb-82		1339.5
Mar-82		1340
Apr-82		1340
May-82		1355
Sep-82		1376
Oct-82		1374.5
Nov-82		1373
Dec-82		1374.5
Jan-83		1370
Feb-83		1373
Mar-83		1403
Apr-83		1441.5
May-83		1450
Jun-83		1452
Apr-84		1391
May-84		1383.5
Jul-84		1376
Aug-84		1370
Sep-84		1364
Oct-84		1362
Nov-84		1360.4

WATER CONSERVATION – SUMMARY – GROUND WATER

GROUND WATER FLUCTUATION:

Location: Upper Claremont Heights **Ground Surface Elevation: 1482.0 ft above MSL**

STATION	4508 B	4508 A
	WS Elev.	WS Elev.
Dec-84		1359
Jan-85		1358.4
Feb-85		1357
Mar-85		1356
Apr-85		1350
May-85		1346
Jun-85		1343.5
Jul-85		1318
Aug-85		1332.4
Sep-85		1308
Oct-85		1326
Nov-85		1326
Jan-86		1324.4
Feb-86		1323
Mar-86		1328
Apr-86		1337
May-86		1324
Jun-86		1330
Jul-86		1332
Sep-86		1348
Oct-86		1349
Nov-86		1349.4
Dec-86		1346
Jan-87		1345
Feb-87		1341
Apr-87		1337
Oct-87		1283
Nov-87		1266
Dec-87		1274
Jan-88		1315
Feb-88		1317
Mar-88		1350
Apr-88		1297
May-88		1296
Jun-88		1288
Jul-88		1276
Aug-88		1264
Sep-88		1265
Oct-88		1298
Sep-89		1279
Oct-89		1282
Nov-89		1280
Jan-90		1280.5
Feb-90		1297
Mar-90		1293

WATER CONSERVATION – SUMMARY – GROUND WATER

GROUND WATER FLUCTUATION:

Location: Upper Claremont Heights **Ground Surface Elevation: 1482.0 ft above MSL**

STATION	4508 B	4508 A
	WS Elev.	WS Elev.
Apr-90		1279
Jul-90		1277
Aug-90		1274
Sep-90		1272
Oct-90		1289.5
Jan-91		1289.5
Feb-91		1292
Mar-91		1293
Apr-91		1290.7
Jun-91		1329
Oct-91		1296
Nov-91		1288
Dec-91		1292
Jan-92		1309
Feb-92		1310.5
Mar-92		1311
Apr-92		1310
May-92		1312
Jun-92		1333.5
Jul-92		1337
Aug-92		1349
Sep-92		1351
Oct-92		1351
Nov-92		1340
Dec-92		1348
Feb-93		1410
Mar-93		1411
Apr-93		1418
Sep-93		1383.5
Oct-93		1377.7
Nov-93		1387
Dec-93		1395
Mar-94		1383.2
Apr-94		1378
May-94		1378
Jul-94		1311
Aug-94		1304
Sep-94		1301
Oct-94		1322
Oct-95		1344.1
Apr-96		1339
Oct-96		1337
Apr-97		1325
Oct-97		1339
Apr-98		1360

WATER CONSERVATION – SUMMARY – GROUND WATER

GROUND WATER FLUCTUATION:

Location: Upper Claremont Heights **Ground Surface Elevation: 1482.0 ft above MSL**

STATION	4508 B	4508 A
	WS Elev.	WS Elev.
Oct-98		1396.5
Apr-99		1351
Oct-99		1330
May-00		1303
Nov-00		1300
Mar-01		1299

WATER CONSERVATION – SUMMARY – GROUND WATER

GROUND WATER FLUCTUATION:

Location: Santa Clarita Valley, Near Castaic Junction **Ground Surface Elevation: 1131.0 ft above MSL**

STATION	7048 A	7048 C	7057 P
	WS Elev.	WS Elev.	WS Elev.
Jan-64	1044.5		
Feb-64	1046.5		
Mar-64	1045.5		
Apr-64	1047		
May-64	1044.8		
Jun-64	1037.2		
Jul-64	1034.5		
Aug-64	1032.2		
Sep-64	1032.2		
Oct-64	1032.2		
Nov-64	1036.2		
Jan-65	1042.6		
Mar-65	1040.4		
Apr-65	1042.9		
May-65	1039.1		
Jul-65	1033.9		
Aug-65	1031.5		
Sep-65	1028.7		
Oct-65	1032.5		
Nov-65	1035.2		
Dec-65	1037.1		
Jan-66	1048.1		
Mar-66	1052.4		
Apr-66	1049.3		
May-66	1044.5		
Jun-66	1043.3		
Nov-66	1037		
Dec-66	1048.6		
Mar-67	1055		
Apr-67	1058.8		
May-67	1054.7		
Jun-67	1052		
Aug-67	1047.9		
Sep-67	1046.4		
Oct-67	1049.2		
Nov-67	1045.7		
Dec-67	1055.2		
Jan-68	1059		
Feb-68	1062.5		
Mar-68	1063.4		
Apr-68	1060.4		
May-68	1056.3		
Jul-68	1052.5		
Aug-68	1051.9		
Sep-68	1055.1		

WATER CONSERVATION – SUMMARY – GROUND WATER

GROUND WATER FLUCTUATION:

Location: Santa Clarita Valley, Near Castaic Junction **Ground Surface Elevation: 1131.0 ft above MSL**

STATION	7048 A	7048 C	7057 P
	WS Elev.	WS Elev.	WS Elev.
Oct-68	1056.8		
Nov-68	1058.7		
Dec-68	1059.5		
Jan-69	1060.1		
Feb-69	1062.4		
Mar-69	1085.9		
Apr-69	1086.2		
May-69	1094.2		
Jun-69	1093.1		
Jul-69	1091.9		
Aug-69	1084.8		
Sep-69	1084.5		
Oct-69	1088		
Nov-69	1085.8		
Dec-69	1086.3		
Jan-70	1084.1		
Feb-70	1088.1		
Mar-70	1094.9		
Apr-70	1094		
May-70	1091.2		
Jun-70	1088.8		
Jul-70	1088.2		
Aug-70	1085		
Sep-70	1084.9		
Oct-70	1085.1		
Nov-70	1086.9		
Dec-70	1090.5		
Jan-71	1098.1		
Feb-71	1095.8		
Mar-71	1099.6		
Apr-71	1099.2		
May-71	1097.5		
Jun-71	1096.7		
Jul-71	1095.3		
Aug-71	1091.6		
Sep-71	1092.1		
Oct-71	1092		
Nov-71	1092.6		
Dec-71	1094.1		
Jan-72	1096.5		
Feb-72	1096.7		
Mar-72	1097.3		
Apr-72	1092.4		
May-72	1092.6		
Jun-72	1088.9		

WATER CONSERVATION – SUMMARY – GROUND WATER

GROUND WATER FLUCTUATION:

Location: Santa Clarita Valley, Near Castaic Junction **Ground Surface Elevation: 1131.0 ft above MSL**

STATION	7048 A	7048 C	7057 P
	WS Elev.	WS Elev.	WS Elev.
Jul-72	1087.4		
Sep-72	1086.9		
Oct-72	1087.9		
Nov-72	1089.5		
Dec-72	1092.9		
Jan-73	1093.1		
Feb-73	1095.3		
Mar-73	1097.6		
Apr-73	1098.5		
May-73	1094.9		
Jun-73	1092.7		
Jul-73	1089.3		
Aug-73	1087.4		
Sep-73	1087.9		
Oct-73	1090.3		
Nov-73	1088.5		
Dec-73	1091.3		
Jan-74	1096.5		
Feb-74	1093.8		
Mar-74	1094.1		
Apr-74	1095.8		
May-74	1096.5		
Jun-74	1094.6		
Jul-74	1090.3		
Aug-74	1093		
Sep-74	1093		
Dec-74	1092.4		
Jan-75	1093.3		
Feb-75	1094.6		
Mar-75	1094.5		
Apr-75	1096.5		
May-75	1096.5		
Jun-75	1092.2		
Jul-75	1089.1		
Aug-75	1084.1		
Sep-75	1083.8		
Oct-75	1084.7		
Nov-75	1087.7		
Dec-75	1087.5		
Jan-76	1086.1		
Feb-76	1089.3		
Mar-76	1089.1		
Apr-76	1089.5		
May-76	1090.5		
Jun-76	1086.8		

WATER CONSERVATION – SUMMARY – GROUND WATER

GROUND WATER FLUCTUATION:

Location: Santa Clarita Valley, Near Castaic Junction **Ground Surface Elevation: 1131.0 ft above MSL**

STATION	7048 A	7048 C	7057 P
	WS Elev.	WS Elev.	WS Elev.
Jul-76	1082.5		
Aug-76	1082.5		
Sep-76	1082.8		
Oct-76	1083.9		
Dec-76	1085.4		
Jan-77	1087.1		
Feb-77	1087		
Mar-77	1086		
May-77	1086.1		
Jun-77	1084.4		
Jul-77	1082.5		
Aug-77	1080.5		
Sep-77	1076.9		
Oct-77	1077.7		
Nov-77	1079.6		
Dec-77	1080		
Jan-78	1083.3		
Feb-78	1087.9		
Mar-78	1097.8		
Apr-78	1099.7		
May-78	1097.2		
Jun-78	1094.6		
Jul-78	1091.7		
Aug-78	1089.5		
Sep-78	1087.6		
Oct-78	1089.7		
Dec-78	1087.9		
Jan-79	1093.4		
Feb-79	1097.3		
Mar-79	1100.7		
Apr-79	1098.3		
May-79	1095.9		
Jun-79	1093.5		
Jul-79	1090.3		
Sep-79	1088.9		
Oct-79	1091.5		
Dec-79	1093.7		
Jan-80	1097.3		
Mar-80	1106.8		
May-80	1107		
Jun-80	1104.6		
Jul-80	1104.1		
Aug-80	1103.2		
Sep-80	1101.3		
Oct-80	1096.6		

WATER CONSERVATION – SUMMARY – GROUND WATER

GROUND WATER FLUCTUATION:

Location: Santa Clarita Valley, Near Castaic Junction **Ground Surface Elevation: 1131.0 ft above MSL**

STATION	7048 A	7048 C	7057 P
	WS Elev.	WS Elev.	WS Elev.
Nov-80	1100.1		
Dec-80	1100.2		
Jan-81	1100.9		
Feb-81	1103.3		
Apr-81	1102.5		
May-81	1103.5		
Jun-81	1100.7		
Jul-81	1100.4		
Aug-81	1099.9		
Sep-81	1099		
Oct-81	1099.4		
Nov-81	1100.4		
Dec-81	1102.2		
Jan-82	1103.3		
Feb-82	1100.3		
Mar-82	1105.4		
Apr-82	1106.1		
May-82	1104.5		
Jun-82	1103.8		
Jul-82	1102.8		
Aug-82	1102.5		
Sep-82	1102		
Oct-82	1101.8		
Nov-82	1102.7		
Dec-82	1103.2		
Jan-83	1102		
Feb-83	1105.9		
Mar-83	1107.1		
Apr-83	1108		
May-83	1107.7		
Jun-83	1107.4		
Jul-83	1106.5		
Aug-83	1105.8		
Oct-83	1104.6		
Nov-83	1104.7		
Dec-83	1105.3		
Jan-84	1105.6		
Feb-84	1105.6		
Mar-84	1106.5		
Apr-84	1104.7		
Jun-84	1102.4		
Jul-84	1102.4		
Aug-84	1103.4		
Sep-84	1101.7		
Dec-84	1105.9		

WATER CONSERVATION – SUMMARY – GROUND WATER

GROUND WATER FLUCTUATION:

Location: Santa Clarita Valley, Near Castaic Junction **Ground Surface Elevation: 1131.0 ft above MSL**

STATION	7048 A	7048 C	7057 P
	WS Elev.	WS Elev.	WS Elev.
Jan-85	1104.3		
Apr-85	1104.8		
May-85	1101.1		
Jun-85	1099.9		
Jul-85	1100.3		
Aug-85	1107		
Sep-85	1100.7		
Oct-85	1100.5		
Dec-85	1101.5		
Jan-86	1101	1108	
Feb-86	1103.5	1110.5	
Mar-86	1105.2	1110.7	
Apr-86	1105	1109.2	
May-86	1102.2	1108.7	
Jun-86	1103.5		
Jul-86	1101.9	1106.4	
Aug-86	1098.3	1105.7	
Sep-86	1097.9	1104.4	
Oct-86	1098.9	1105.5	
Nov-86		1104.2	
Dec-86	1098.7	1105.3	
Jan-87	1100.7	1106	
Mar-87	1097	1093.7	
Apr-87	1098.7	1104.7	
May-87	1097	1104.2	
Jun-87	1094.5	1102.5	
Jul-87	1088.5	1098.7	
Aug-87		1097.2	
Sep-87	1094.3	1099.3	
Oct-87	1094	1101.6	
Nov-87	1096.5	1102.2	
Dec-87	1095.5	1102.7	
Jan-88	1099.9	1104.2	
Feb-88	1098.2	1103.4	
Mar-88	1098.5	1104.2	
Jun-88	1098	1102.4	
Jul-88	1094	1101.2	
Aug-88	1095.7	1101.2	
Sep-88	1093.8	1100.7	
Oct-88	1096.5	1100.2	
Jan-89	1092.8	1102.7	
Mar-89	1097.2	1101.8	
Apr-89	1093.5	1100.2	
May-89	1095.7	1100.3	
Jun-89	1095	1099.3	

WATER CONSERVATION – SUMMARY – GROUND WATER

GROUND WATER FLUCTUATION:

Location: Santa Clarita Valley, Near Castaic Junction **Ground Surface Elevation: 1131.0 ft above MSL**

STATION	7048 A	7048 C	7057 P
	WS Elev.	WS Elev.	WS Elev.
Jul-89	1093.6	1098.2	
Aug-89	1089.6	1098.2	
Sep-89	1091.7	1097.4	
Oct-89	1091.8	1095.7	1100.4
Nov-89	1089	1097	
Dec-89	1089.9	1096.3	
Jan-90	1091		
Mar-90	1094.3	1097.8	1104.5
Apr-90		1097.3	
Jun-90		1096.1	
Jul-90		1085.2	
Sep-90		1091.2	
Oct-90			1092
Nov-90		1090.7	
Dec-90		1091.4	
Jan-91		1092.2	
Feb-91		1092.2	
Apr-91		1095.7	
May-91		1093	
Jun-91		1087.3	
Jul-91		1085.2	
Aug-91		1082.7	
Sep-91		1080	
Oct-93			1101
Oct-94			1095.6
May-95			1109.8
Oct-95			1099
Nov-96			1099.8
May-97			1095.5
Oct-97			1092.6
Dec-98			1104.4
May-99			1095.1
Nov-99			1095

WATER CONSERVATION – SUMMARY – GROUND WATER

GROUND WATER FLUCTUATION:

Location: Little Rock, South of Palmdale **Ground Surface Elevation: 2777.0 ft above MSL**

STATION	8825
	WS Elev.
Jan-56	2647.8
Feb-56	2646.3
Mar-56	2647.9
Apr-56	2648
May-56	2653.4
Jun-56	2645.9
Jul-56	2629.9
Aug-56	2644.2
Sep-56	2649.6
Oct-56	2652
Nov-56	2653.7
Dec-56	2655.2
Jan-57	2656.6
Feb-57	2657.5
Mar-57	2658.6
Apr-57	2657.7
May-57	2656.7
Jun-57	2655.8
Jul-57	2649.8
Aug-57	2651.3
Sep-57	2651
Oct-57	2654.4
Nov-57	2656
Dec-57	2657.8
Jan-58	2658.9
Feb-58	2660
Mar-58	2660.5
Apr-58	2660.5
May-58	2660.8
Jun-58	2661.3
Jul-58	2659.6
Aug-58	2657.7
Sep-58	2657.6
Oct-58	2666.1
Nov-58	2659.9
Dec-58	2663.2
Jan-59	2664.4
Feb-59	2664.7
Mar-59	2665.4
Apr-59	2662
May-59	2658.7
Jun-59	2662.5
Jul-59	2657.4
Aug-59	2656.4
Sep-59	2658.7

WATER CONSERVATION – SUMMARY – GROUND WATER

GROUND WATER FLUCTUATION:

Location: Little Rock, South of Palmdale **Ground Surface Elevation: 2777.0 ft above MSL**

STATION	8825
	WS Elev.
Oct-59	2661.7
Nov-59	2660.6
Dec-59	2662.1
Jan-60	2663.2
Feb-60	2664.3
Mar-60	2664.4
Apr-60	2659.9
May-60	2660.4
Jun-60	2658.5
Jul-60	2654.3
Aug-60	2652.7
Sep-60	2654.1
Oct-60	2650.6
Nov-60	2656
Dec-60	2657.1
Jan-61	2658.4
Feb-61	2658.2
Mar-61	2654.3
Apr-61	2655.8
May-61	2653
Jun-61	2651.6
Jul-61	2649.1
Aug-61	2646.6
Sep-61	2650.2
Oct-61	2648.1
Nov-61	2650.9
Dec-61	2649.6
Jan-62	2654
Feb-62	2654.4
Mar-62	2655.2
Apr-62	2652.6
May-62	2653.6
Jun-62	2653.5
Jul-62	2652.2
Aug-62	2650.5
Sep-62	2651.5
Oct-62	2651.9
Nov-62	2653.5
Jan-63	2654.8
Feb-63	2655.3
Mar-63	2650.1
Apr-63	2654.6
May-63	2649.9
Jun-63	2648.3
Jul-63	2647.2

WATER CONSERVATION – SUMMARY – GROUND WATER

GROUND WATER FLUCTUATION:

Location: Little Rock, South of Palmdale **Ground Surface Elevation: 2777.0 ft above MSL**

STATION	8825
	WS Elev.
Aug-63	2645
Sep-63	2648.7
Oct-63	2650.3
Nov-63	2652.1
Dec-63	2653.2
Jan-64	2653.7
Feb-64	2653.3
Mar-64	2650.3
Apr-64	2653.5
May-64	2653
Jun-64	2653.5
Jul-64	2651.5
Aug-64	2649.3
Sep-64	2648.2
Oct-64	2646.5
Dec-64	2652
Jan-65	2652.9
Feb-65	2653.4
Mar-65	2652.4
Apr-65	2650.1
May-65	2652.1
Jun-65	2649.8
Jul-65	2649.7
Aug-65	2648.8
Sep-65	2650.9
Oct-65	2650.8
Nov-65	2651.8
Dec-65	2653
Jan-66	2653.7
Feb-66	2654.6
Mar-66	2654.8
Apr-66	2655.3
May-66	2656.7
Jun-66	2655.2
Jul-66	2654.5
Aug-66	2652
Sep-66	2650.8
Oct-66	2653.9
Nov-66	2656.7
Dec-66	2657.5
Jan-67	2657.8
Feb-67	2657.2
Mar-67	2658.2
Apr-67	2659.3
May-67	2659.3

WATER CONSERVATION – SUMMARY – GROUND WATER

GROUND WATER FLUCTUATION:

Location: Little Rock, South of Palmdale **Ground Surface Elevation: 2777.0 ft above MSL**

STATION	8825
	WS Elev.
Jun-67	2658.6
Jul-67	2657.1
Aug-67	2656.3
Sep-67	2659
Oct-67	2659.5
Nov-67	2661
Jan-68	2662.1
Feb-68	2662.6
Mar-68	2662.7
Apr-68	2662.7
May-68	2662.4
Jun-68	2661.8
Jul-68	2660.2
Aug-68	2657.2
Sep-68	2658.9
Oct-68	2653.5
Nov-68	2658.1
Dec-68	2659.6
Feb-69	2660.9
Mar-69	2661
Apr-69	2660
May-69	2659.8
Jun-69	2658.6
Jul-69	2660
Aug-69	2659.6
Sep-69	2660.2
Oct-69	2660
Nov-69	2663.6
Dec-69	2664.8
Jan-70	2665.1
Feb-70	2665.2
Mar-70	2665.4
Apr-70	2665.9
May-70	2660.2
Jun-70	2657.8
Jul-70	2662
Aug-70	2660.2
Sep-70	2660.1
Oct-70	2660.3
Nov-70	2663
Dec-70	2664.1
Jan-71	2662.2
Feb-71	2664.1
Mar-71	2663.7
Apr-71	2660.4

WATER CONSERVATION – SUMMARY – GROUND WATER

GROUND WATER FLUCTUATION:

Location: Little Rock, South of Palmdale **Ground Surface Elevation: 2777.0 ft above MSL**

STATION	8825
	WS Elev.
May-71	2660.2
Jun-71	2660.1
Jul-71	2659.9
Aug-71	2657.5
Sep-71	2658.6
Oct-71	2660
Nov-71	2661.1
Dec-71	2660.8
Jan-72	2661.8
Feb-72	2661.2
Mar-72	2661.6
Apr-72	2660.7
May-72	2659.3
Jun-72	2659.6
Jul-72	2657.3
Aug-72	2657.3
Sep-72	2657.5
Oct-72	2657
Nov-72	2658.3
Dec-72	2659.9
Jan-73	2657.5
Feb-73	2658.7
Mar-73	2659.9
Apr-73	2658.5
May-73	2656.4
Jun-73	2655.8
Jul-73	2654
Aug-73	2653.4
Sep-73	2653.9
Oct-73	2655.1
Nov-73	2656.7
Dec-73	2657.2
Feb-74	2658.2
Mar-74	2657.5
Apr-74	2657
May-74	2654.9
Jun-74	2652.9
Jul-74	2650.7
Aug-74	2651.6
Sep-74	2654.3
Oct-74	2656.5
Nov-74	2657.2
Dec-74	2657.1
Jan-75	2658.6
Feb-75	2659.1

WATER CONSERVATION – SUMMARY – GROUND WATER

GROUND WATER FLUCTUATION:

Location: Little Rock, South of Palmdale **Ground Surface Elevation: 2777.0 ft above MSL**

STATION	8825
	WS Elev.
Apr-75	2659.3
May-75	2657.2
Jun-75	2655.8
Jul-75	2655.6
Sep-75	2655.3
Oct-75	2655.2
Nov-75	2658.1
Dec-75	2657.2
Jan-76	2656.9
Feb-76	2658.3
Mar-76	2658.5
Apr-76	2657.7
May-76	2657.1
Jun-76	2655.7
Jul-76	2655.5
Aug-76	2654.1
Sep-76	2655.7
Oct-76	2657.3
Nov-76	2657.2
Dec-76	2658.9
Jan-77	2659.4
Feb-77	2659.5
Mar-77	2659.3
Apr-77	2659
May-77	2659
Jun-77	2657.4
Jul-77	2659.3
Aug-77	2657.3
Sep-77	2656.9
Oct-77	2657.6
Nov-77	2658.2
Dec-77	2659.3
Jan-78	2659.3
Feb-78	2660
Mar-78	2660.1
Apr-78	2660.3
May-78	2658.3
Jun-78	2658.3
Jul-78	2656.9
Aug-78	2656.2
Sep-78	2658.8
Oct-78	2659.3
Jan-79	2661.8
Mar-79	2663.5
Apr-79	2664.4

WATER CONSERVATION – SUMMARY – GROUND WATER

GROUND WATER FLUCTUATION:

Location: Little Rock, South of Palmdale **Ground Surface Elevation: 2777.0 ft above MSL**

STATION	8825
	WS Elev.
Jun-79	2660
Sep-79	2658.8
Jan-80	2660.3
May-80	2667.4
Jun-80	2667.8
Jul-80	2668.4
Aug-80	2668.6
Sep-80	2670.4
Oct-80	2671.2
Nov-80	2671.6
Dec-80	2672.2
Jan-81	2672.6
Feb-81	2672.7
Apr-81	2672.6
May-81	2671.4
Jun-81	2671.2
Jul-81	2670.2
Aug-81	2667.4
Sep-81	2666.4
Oct-81	2669.3
Nov-81	2658.5
Dec-81	2670
Jan-82	2670.1
Feb-82	2669.9
Mar-82	2670.1
Apr-82	2669.1
May-82	2668.8
Jun-82	2668.2
Jul-82	2668.5
Aug-82	2668.2
Sep-82	2668.8
Oct-82	2668.3
Nov-82	2669.2
Dec-82	2669.3
Jan-83	2669.6
Feb-83	2669.6
Apr-83	2670
May-83	2669.7
Jun-83	2670
Jul-83	2670.2
Aug-83	2671.6
Sep-83	2672
Oct-83	2673.4
Nov-83	2673.8
Dec-83	2674.4

WATER CONSERVATION – SUMMARY – GROUND WATER

GROUND WATER FLUCTUATION:

Location: Little Rock, South of Palmdale **Ground Surface Elevation: 2777.0 ft above MSL**

STATION	8825
	WS Elev.
Jan-84	2674.7
Feb-84	2675.2
Mar-84	2675.2
Apr-84	2675
May-84	2674.4
Jun-84	2666.3
Jul-84	2665.8
Aug-84	2666.4
Sep-84	2670.7
Oct-84	2671.5
Nov-84	2672.7
Dec-84	2673.1
Jan-85	2670.9
Feb-85	2671.5
Jun-85	2664.1
Jul-85	2666.9
Aug-85	2666.1
Sep-85	2669.2
Oct-85	2669.5
Nov-85	2669.4
Dec-85	2669.5
Jan-86	2668.8
Feb-86	2669.4
Mar-86	2669.8
Apr-86	2666.3
May-86	2669.3
Jun-86	2668.9
Jul-86	2665.1
Aug-86	2663
Sep-86	2668
Oct-86	2658.9
Mar-87	2667.5
Apr-87	2659.1
Sep-87	2667
Oct-87	2666.8
Nov-87	2662.8
Dec-87	2670.3
Jan-88	2667.5
Feb-88	2667
Mar-88	2665.9
May-88	2665.3
Jun-88	2665.3
Aug-88	2662.9
Sep-88	2664
Oct-88	2661.3

WATER CONSERVATION – SUMMARY – GROUND WATER

GROUND WATER FLUCTUATION:

Location: Little Rock, South of Palmdale **Ground Surface Elevation: 2777.0 ft above MSL**

STATION	8825
	WS Elev.
Jan-89	2661.6
Feb-89	2650.3
Mar-89	2665.8
Apr-89	2666.3
May-89	2665.5
Jun-89	2665.3
Aug-89	2663.3
Sep-89	2665.3
Oct-89	2661.3
Dec-89	2665.2
Jan-90	2661.2
Mar-90	2665.8
Apr-90	2665
May-90	2665
Jun-90	2665.6
Jul-90	2660.5
Oct-90	2665
Dec-90	2663
Mar-91	2663
Apr-91	2663
May-91	2665
Jun-91	2663
Jul-91	2661
Aug-91	2662
Sep-91	2663
Oct-91	2663
Nov-91	2661
Dec-91	2661
Jan-92	2661
Feb-92	2662
Mar-92	2662
Apr-92	2660
May-92	2660
Jun-92	2659
Jul-92	2661
Aug-92	2661
Sep-92	2661
Oct-92	2663
Nov-92	2663
Dec-92	2663
Feb-93	2663
Mar-93	2665
May-93	2665
Jun-93	2674
Jul-93	2667

WATER CONSERVATION – SUMMARY – GROUND WATER

GROUND WATER FLUCTUATION:

Location: Little Rock, South of Palmdale **Ground Surface Elevation: 2777.0 ft above MSL**

STATION	8825
	WS Elev.
Aug-93	2667
Sep-93	2670
Oct-93	2671
Nov-93	2671
Dec-93	2669
Jan-94	2669
Mar-94	2673
May-94	2670
Jul-94	2668
Aug-94	2671
Sep-94	2673
Jan-95	2667
Feb-95	2667
Mar-95	2670
Apr-95	2670
Jun-95	2670
Jul-95	2669
Aug-95	2667
Oct-95	2666
Dec-95	2671
Jan-96	2665
Feb-96	2666
Mar-96	2667
Apr-96	2667
Apr-97	2662
Oct-97	2661
Dec-98	2663
Feb-99	2665
Nov-99	2663
Jun-00	2664
Dec-00	2665
May-01	2661

WATER CONSERVATION – SUMMARY – GROUND WATER

GROUND WATER FLUCTUATION:

Location: Antelope Valley, South of Lancaster **Ground Surface Elevation: 2512 ft above MSL**

STATION	9962 C	9962 B	9962 D	9974
	WS Elev.	WS Elev.	WS Elev.	WS Elev.
Apr-61	2236.8			
May-61	2237.4			
Jun-61	2235.8			
Jul-61	2232			
Aug-61	2233.3			
Sep-61	2231.6			
Oct-61	2231.7			
Nov-61	2233.4			
Dec-61	2233.5			
Jan-62	2237.1			
Feb-62	2237			
Mar-62	2237.8			
Apr-62	2235.9			
May-62	2233.2			
Jun-62	2231.1			
Jul-62	2229.4			
Aug-62	2227.4			
Sep-62	2226			
Oct-62	2226.5			
Nov-62	2229.7			
Jan-63	2231			
Feb-63	2230.4			
Mar-63	2229.8			
Apr-63	2230.1			
May-63	2227.3			
Jun-63	2225.9			
Jul-63	2223.9			
Aug-63	2221.7			
Sep-63	2221.2			
Oct-63	2222.5			
Nov-63	2224.8			
Dec-63	2225.8			
Jan-64	2225.6			
Feb-64	2227			
Mar-64	2227.4			
Apr-64	2226.4			
May-64	2224.3			
Jun-64	2221.5			
Jul-64	2217.6			
Aug-64	2216.1			
Sep-64	2216.2			
Oct-64	2216.3			
Nov-64	2218.9			
Jan-65	2221.2			
Feb-65	2220.1			

WATER CONSERVATION – SUMMARY – GROUND WATER

GROUND WATER FLUCTUATION:

Location: Antelope Valley, South of Lancaster **Ground Surface Elevation: 2512 ft above MSL**

STATION	9962 C	9962 B	9962 D	9974
	WS Elev.	WS Elev.	WS Elev.	WS Elev.
Mar-65	2219.5			
Apr-65	2220.6			
May-65	2218			
Jun-65	2215.4			
Jul-65	2211.6			
Aug-65	2210			
Sep-65	2210.7			
Oct-65	2210			
Nov-65	2212.2			
Dec-65	2215.1			
Jan-66	2215.8			
Feb-66	2217			
Mar-66	2214.7			
Apr-66	2213.3			
May-66	2210.9			
Jun-66	2209.2			
Jul-66	2206.9			
Aug-66	2205.6			
Oct-66	2207.6			
Dec-66	2211.1			
May-67	2198.4			
Aug-67	2208.4			
Oct-67	2203.4			
Nov-67	2204.3			
Dec-67	2206.4			
Jan-68	2207.5			
Feb-68	2207.4			
Mar-68	2206.8			
Apr-68	2205.2			
May-68	2203.7			
Jun-68	2202.2			
Jul-68	2200.5			
Aug-68	2199.7			
Sep-68	2199.6			
Oct-68	2200.3			
Nov-68	2199.4			
Dec-68	2194.6			
Feb-69	2197.7			
Mar-69	2201.6			
Apr-69	2203.2			
May-69	2201.2			
Jun-69	2200.3			
Jul-69	2198.9			
Aug-69	2197			
Sep-69	2198.5			

WATER CONSERVATION – SUMMARY – GROUND WATER

GROUND WATER FLUCTUATION:

Location: Antelope Valley, South of Lancaster **Ground Surface Elevation: 2512 ft above MSL**

STATION	9962 C	9962 B	9962 D	9974
	WS Elev.	WS Elev.	WS Elev.	WS Elev.
Oct-69	2197.9			
Nov-69	2198.2			
Dec-69	2200.3			
Jan-70	2200.8			
Feb-70	2200.9			
Mar-70	2201.1			
Apr-70	2199.5			
May-70	2199.1			
Jun-70	2197.2			
Jul-70	2195.2			
Aug-70	2195			
Sep-70	2194.2			
Oct-70	2194.5			
Nov-70	2195.3			
Dec-70	2191.7			
Jan-71	2196.6			
Feb-71	2197.7			
Mar-71	2197.1			
Apr-71	2195.6			
May-71	2192.9			
Jun-71	2192.2			
Jul-71	2190.6			
Aug-71	2189.5			
Sep-71	2188.8			
Oct-71	2188.8			
Nov-71	2189.6			
Dec-71	2189.6			
Jan-72	2190.9			
Feb-72	2191			
Mar-72	2190.6			
Apr-72	2189.2			
May-72	2187			
Jun-72	2187.8			
Jul-72	2185.6			
Aug-72	2184.4			
Sep-72	2184.2			
Oct-72	2184.6			
Nov-72	2185.4			
Dec-72	2187.2			
Jan-73	2188.1			
Feb-73	2188.6			
Mar-73	2189.3			
Apr-73		2187		
May-73		2182.4		
Jun-73		2183.9		

WATER CONSERVATION – SUMMARY – GROUND WATER

GROUND WATER FLUCTUATION:

Location: Antelope Valley, South of Lancaster **Ground Surface Elevation: 2512 ft above MSL**

STATION	9962 C	9962 B	9962 D	9974
	WS Elev.	WS Elev.	WS Elev.	WS Elev.
Jul-73		2182.5		
Aug-73		2180.3		
Sep-73		2178.6		
Oct-73		2178.7		
Nov-73		2180.4		
Dec-73		2181.3		
Jan-74		2182.1		
Feb-74		2183.2		
Mar-74		2182.2		
Apr-74		2181.4		
May-74		2180.5		
Jun-74		2178.3		
Jul-74		2176.2		
Aug-74		2169.3		
Sep-74		2174.6		
Nov-74		2168	2176.9	
Dec-74			2177.1	
Jan-75			2177.6	
Feb-75			2177.7	
Mar-75			2177.6	
Apr-75			2176	2180
May-75			2176.3	2179
Jun-75			2174.9	
Jul-75			2174.4	
Aug-75			2173	2171.5
Sep-75			2172.4	2172.3
Oct-75			2172	
Nov-75			2169.2	
Dec-75			2168.7	2159
Jan-76			2168.7	2173.4
Feb-76			2173	2171
Mar-76				2161
Apr-76			2172	
May-76			2167.3	2170.8
Jun-76			2170.9	2168.5
Jul-76			2169.8	2169.5
Aug-76			2169.4	2166
Sep-76			2168.9	2165.1
Oct-76			2168.9	2167.2
Nov-76			2168.8	2168.5
Dec-76			2169.9	2168.2
Jan-77			2170.2	2170.2
Feb-77			2170	2170.1
Mar-77			2170	2169.5
May-77			2169	2167

WATER CONSERVATION – SUMMARY – GROUND WATER

GROUND WATER FLUCTUATION:

Location: Antelope Valley, South of Lancaster **Ground Surface Elevation: 2512 ft above MSL**

STATION	9962 C	9962 B	9962 D	9974
	WS Elev.	WS Elev.	WS Elev.	WS Elev.
Jun-77			2168.7	2166
Jul-77			2167.7	2164
Aug-77			2163.7	2163.2
Sep-77			2162	2162.5
Oct-77			2161	2162.6
Nov-77				2164.6
Dec-77				2164.3
Jan-78				2164.1
Feb-78				2165
Mar-78				2165.1
Apr-78				2165.1
May-78				2165
Jun-78				2161.8
Jul-78				2161.7
Aug-78				2160.9
Sep-78				2161.9
Oct-78				2161.5
Jan-79				2164.5
Mar-79				2165.1
Apr-79				2164.3
Jun-79				2161.4
Sep-79				2159.6
Mar-80				2162.9
Jun-80				2160.8
Sep-80				2158.7
Oct-80				2158.4
Nov-80				2159.3
Dec-80				2157.1
Jan-81				2156
Feb-81				2154.4
Apr-81				2160.7
May-81				2156.8
Jun-81				2151.2
Jul-81				2149.6
Aug-81				2152.3
Sep-81				2157.1
Oct-81				2158
Nov-81				2158.6
Dec-81				2159
Jan-82				2159.3
Feb-82				2158.3
Mar-82				2158.2
Apr-82				2154.7
May-82				2157.1
Jun-82				2153.7

WATER CONSERVATION – SUMMARY – GROUND WATER

GROUND WATER FLUCTUATION:

Location: Antelope Valley, South of Lancaster **Ground Surface Elevation: 2512 ft above MSL**

STATION	9962 C	9962 B	9962 D	9974
	WS Elev.	WS Elev.	WS Elev.	WS Elev.
Jul-82				2154.1
Aug-82				2146.8
Sep-82				2153
Nov-82				2152.6
Dec-82				2154.7
Jan-83				2153.8
Feb-83				2157
Apr-83				2156
May-83				2153.1
Jul-83				2145.1
Aug-83				2150.8
Sep-83				2150.4
Oct-83				2151.3
Nov-83				2151.5
Jan-84				2152.1
Feb-84				2151.4
Apr-84				2150.2
Jul-84				2147.7
Aug-84				2147.4
Sep-84				2147.6
Oct-84				2147
Nov-84				2147.3
Jan-85				2146.7
Feb-85				2149.1
Jun-85				2146.8
Jul-85				2144.9
Sep-85				2146
Oct-85				2146.2
Nov-85				2147
Jan-86				2146.9
Feb-86				2149
Mar-86				2147.7
Apr-86				2147.8
May-86				2146.7
Jun-86				2144.7
Aug-86				2144.1
Sep-86				2143
Oct-86				2142.4
Feb-87				2146.5
Mar-87				2146.3
Apr-87				2144
Mar-90				2144
Apr-90				2145
May-90				2148
Jun-90				2148

WATER CONSERVATION – SUMMARY – GROUND WATER

GROUND WATER FLUCTUATION:

Location: Antelope Valley, South of Lancaster **Ground Surface Elevation: 2512 ft above MSL**

STATION	9962 C	9962 B	9962 D	9974
	WS Elev.	WS Elev.	WS Elev.	WS Elev.
Jul-90				2148
Aug-90				2147
Oct-90				2149
Dec-90				2145
Apr-91				2149
May-91				2145
Jun-91				2149
Jul-91				2137
Aug-91				2151
Sep-91				2153
Oct-91				2147
Nov-91				2149
Jan-92				2137
Feb-92				2147
Mar-92				2147
Apr-92				2142
Jun-92				2145
Jul-92				2145
Aug-92				2149
Oct-92				2147
Nov-92				2145
Dec-92				2146
Jan-93				2146
Feb-93				2147
Mar-93				2153
May-93				2147
Jun-93				2151
Jul-93				2147
Aug-93				2147
Sep-93				2149
Oct-93				2149
Nov-93				2149
Dec-93				2149
Jan-94				2147
Mar-94				2149
May-94				2147
Jul-94				2147
Aug-94				2149
Sep-94				2146
Feb-95				2145
Mar-95				2149
Apr-95				2149
Jun-95				2148
Jul-95				2151
Oct-97				2253

WATER CONSERVATION – SUMMARY – GROUND WATER

GROUND WATER FLUCTUATION:

Location: Antelope Valley, South of Lancaster **Ground Surface Elevation: 2512 ft above MSL**

STATION	9962 C	9962 B	9962 D	9974
	WS Elev.	WS Elev.	WS Elev.	WS Elev.
Dec-98				2278
Apr-99				2281
Nov-99				2263
Jun-00				2258
Dec-00				2275
May-02				2261

THE END

HYDROLOGIC REPORT 2000 – 2001