County of Los Angeles Public Works

# HYDROLOGIC REPORT

# 2019 – 2020

Public Works
LOS ANGELES COUNTY

Stormwater Engineering Division

# TABLE OF CONTENTS


Title Page ..... 1
Table Of Contents ..... 2
Appendices..... 3
Acknowledgments..... 4
Introduction..... 5
Los Angeles County.... ..... 6
Flood Control District ..... 9

**PRECIPITATION**

Rainfall Indices..... 11
Standard Rain Gage Stations During Water Year 2019-2020..... 12
Daily Rainfall Summary..... 15
Rain Gage Locations ..... 16

**EVAPORATION**

Active Stations ..... 17
Monthly Summary..... 18
Evaporation Station Locations ..... 19

**RUNOFF**

Index of Stream Gaging Stations ..... 21
Stream Gaging Station Information ..... 23
Daily Discharge ..... 23
Stream Gaging Station Peak Flow ..... 23
Stream Gage Locations ..... 24

**RESERVOIRS**

Yearly Reservoir Operation Summary ..... 26
Reservoir Information ..... 27
Dam Locations ..... 42

**EROSION CONTROL**

Debris Basin Locations ..... 481
Debris Basin – Design Data ..... 45
Yearly Debris Management Summary ..... 49

**WATER CONSERVATION**

Conserving The Waters ..... 52
Imported Water ..... 52
Recycled Water ..... 53
Seawater Barrier Projects ..... 53
Seasonal Data and Maps ..... 53
Groundwater Basins and Groundwater Recharge ..... 54

SUMMARY

Public Works Facilities ..... 483
Other Facilities ..... 488
Total Monthly Water Conserved ..... 58
Imported Water Outlet Releases ..... 58
Reclaimed Water ..... 58
Ground Water Fluctuation ..... 58
Keywell Location Map ..... 59

# Appendices

**DAILY RAINFALL SUMMARY**.....A
**STREAM GAGING STATION INFORMATION**.....B
**DAILY DISCHARGE**.... .....C
**STREAM GAGING STATION PEAK FLOW** .....D
**YEARLY RESERVOIR OPERATION SUMMARY**.....E
**EROSION CONTROL - LOCATION MAP**.....F
**SUMMARY OF WATER CONSERVATION**
- **Public Works Facilities** .....G
- **Other Facilities** .....H
- **Total Monthly Water Conserved** .....I
- **Imported Water Outlet Releases** .....J
- **Reclaimed Water** .....K
- **Ground Water Fluctuation** .....L

# ACKNOWLEDGMENTS

This report was prepared by Public Works, Stormwater Engineering Division under the direction of Sree Kumar, Assistant Deputy Director. The following staff contributed to the completion of this report:

## General Supervision and Coordination

Martin Araiza, Hydrology Section Head
Eric Batman, Operations Section Head

## Data Collection and Processing

### Operations Section

**William Saunders**

Travis Wylde
Sarkis Zargaryan
Fred Lai
Irene Wong
Mohammad Sassani

Janet Lozano
Bernie Rodriguez
Victor Norwid

Jason Kitto
Liang Weng
Thien Nguyen
Daniel Truong

### Sea Water Barriers Unit

**Joy Pipkin**

Adam Lee
Cody Snider
Anthony Barreras

Jason St. Pierre

Don Wilson
Carlos Lara
Enrique Souffle

Thu Trinh
Oscar Gallegos

### Records & System Support Unit

**Martin Araiza**

Rodney Brown
Miguel Osorio
Steven Chang

Arthur Gotingco
Andrew Lee

### Instrumentation Support Unit

**Ramil Parial**

Thompson Nguyen
Luong Quang
Robert Fuentes

Steve Carrillo
Roberto Banuelos
Nabor Arce

## ** DISCLAIMER **

***The information contained in this report was valid at the time of publication. Public Works reserves the right to make changes at any time and without notice, and assumes no liability for any damages incurred directly or indirectly as a result of changes errors, omissions or discrepancies.***

# INTRODUCTION

This report discusses hydrologic data relative to the County of Los Angeles for the period beginning October 1, 2019, and ending September 30, 2020. Public Works revised the format of this report to provide users with more useful data and a more efficient means of utilizing the data. This report is organized into 8 sections.

## LOS ANGELES COUNTY

This section provides a brief discussion on the topography, geology, land use, climate, hydrometeorological, and runoff characteristics of the County of Los Angeles.

## FLOOD CONTROL DISTRICT

This section provides a brief discussion on floods in the County, the subsequent formation of the Los Angeles County Flood Control District, and its two main tasks under the Flood Control Act - flood control and water conservation. The responsibilities and authority vested in the District were transferred to Public Works in 1985.

## PRECIPITATION

The Precipitation Section provides daily and annual rainfall data collected by Public Works' active standard rain gage stations. Unpublished rainfall data are on file at Public Works.

## EVAPORATION

The Evaporation Section contains data for 13 active evaporation stations. Unpublished evaporation data from previous years are on file at Public Works. Unpublished information may be obtained by contacting:

County of Los Angeles Public Works
Stormwater Engineering Division
P.O. Box 1460
Alhambra, CA 91802-1460
(626) 458-6120

## RUNOFF

The Runoff Section provides mean daily and peak annual flow rate data for 62 active stream gaging stations operated by Public Works. Annual summaries for each of these stations are also contained in this section. Unpublished stream flow data are on file at Public Works.

## RESERVOIRS

The Reservoir Section provides a summary of annual inflow, outflow, and storage data for 14 dams and reservoirs. Daily inflow values are on file at Public Works.

## EROSION CONTROL

The Erosion Control Section provides debris basin design data, debris basin production summary, and debris production history for 118 debris basins owned and operated by Public Works.

## WATER CONSERVATION

The Water Conservation Section provides data for 27 groundwater recharge facilities. This section contains data on the water conserved at various facilities and the water injected at the seawater barrier projects. Historical well level data for key wells are also contained in this section. Unpublished water conservation data from previous years are on file at Public Works.

# LOS ANGELES COUNTY

## TOPOGRAPHY

The County of Los Angeles covers an area of 4,083 square miles and measures approximately 66 miles in the east - west and 73 miles in the north - south directions.

The terrain within the County can be classified in broad terms as being 25 percent mountainous; 14 percent coastal plain; and 61 percent hills, valleys, or deserts. Elevation of the terrain ranges from sea level to a maximum elevation of 10,000 feet. The coastal plain is generally of mild slope and contains relatively few depressions or natural ponding areas. The slopes of main river systems crossing the coastal plain, such as the San Gabriel River, Los Angeles River, and Ballona Creek, range from 4 to 14 feet per mile.

Topography in the mountainous area is generally rugged with deep, V-shaped canyons separated by sharp dividing ridges. Steep walled canyons with side slopes of 70 percent or more are common. The gradient of principal canyons in the San Gabriel Mountains ranges from 150 to 850 feet per mile. Mountain ranges are aligned in a general east-west direction with the dominant range being the San Gabriel Mountains. The majority of mountain ridges lie below Elevation 5,000 feet. The total area above this level is approximately 210 square miles.

## GEOLOGY - SOILS

Igneous, metamorphic, and sedimentary rock groups are all present within the County. The San Gabriel Mountains and Verdugo Hills are composed primarily of highly fractured igneous rock, with large areas of granitic rock formation being exposed. Faulting and deep weathering have produced porous zones in the rock formation; however, rock masses have produced a comparatively shallow soil mantle due to the steepness of slopes which accelerates erosion of the fine material.

Other mountains and hilly reaches are composed primarily of folded and faulted sedimentary rocks, including shale, sandstone, and conglomerate. Residual soils in these areas are shallow and generally less pervious than those of the San Gabriel Mountain range.

Valley and desert soils are alluvial and vary from coarse sand and gravel near canyon mouths to silty clay, clay and sand and gravel in lower valleys and the coastal plain. The alluvial fill has accumulated by repeated deposition of sediments to depths as great as several thousand feet. This fill is quite porous in areas of relatively low clay content. Geologic structures and irregularities in the underlying bedrock divide the alluvium into several groundwater basins. Valley soils are generally well drained but there are a few areas containing perched water.

## LAND USE

The principal vegetative cover of upper mountain areas consists of various species of brush and shrubs known as chaparral. Most trees found on mountain slopes are oak, with alder, willow, and sycamore found along streambeds at lower elevations. Pine, cedar, and juniper are found in ravines at higher elevations and along high mountain summits.

The chaparral is extremely flammable, and extensive burns of the mountain vegetation frequently occur during dry, low-humidity weather accompanied by high winds. Chaparral has the ability to sprout following fire and grows rapidly to re-establish the watershed cover within a period of 5 to 10 years.

Grasses are the principal natural vegetation on the hills. Much of the hill land and nearly all of the valley land in the densely populated portion of the County south of the San Gabriel Mountains has been converted to urban and suburban use. Development of the Santa Clarita Valley and desert areas to the north of the San Gabriel Mountains is sparse at present but is proceeding rapidly.

## CLIMATE

The climate within the County varies between subtropical on the Pacific Ocean side of the San Gabriel Mountain range to arid in the Mojave Desert. Nearly all precipitation occurs during the months of December through March. Precipitation during summer months is infrequent, and rainless periods of several months are common. Snowfall at elevations above 5,000 feet is frequently experienced during the winter storms, but the snow melts rapidly except on higher peaks and the northern slopes. Snow is rarely experienced on the coastal plain.

January and July are the coldest and warmest months of the year, respectively. At the Los Angeles civic center, the 30-year average daily minimum temperature for January is 48 degrees (Fahrenheit). The average daily maximum temperature for July is 84 degrees. At Mount Wilson (Elevation 5,850 feet), the 30-year average daily minimum temperature for January is 35 degrees and the average daily maximum temperature for July is 80 degrees.

## HYDROMETEOROLOGIC CHARACTERISTICS

**Coastal and Mountain Areas**

Precipitation (rainfall) in the Los Angeles area occurs primarily in the form of winter orographic rainfall associated with extra tropical cyclones of North Pacific origin. Major storms consist of one or more frontal systems and occasionally last four days or longer. Air masses and frontal systems associated with major storms commonly extend for 500 to 1,000 miles in length and produce rainfall simultaneously throughout the County. Major storms approach Southern California from the west or northwest with southerly winds which continue until frontal passage. The mountain ranges lie directly across the path of the inflow of warm, moist air, and orographic effects greatly intensify precipitation.

The seasonal normal rainfall in the County of Los Angeles ranges from 26.72 inches in the San Gabriel Mountains to 7.27 inches in the desert. The average annual rainfall for the County is 15.17 inches.

The effects of snowmelt upon flood runoff are of significance in the few cases when warm spring rains from southerly storms fall on a snowpack. During major storms, temperatures throughout the County may remain above freezing. Average individual storm rainfall amounts and intensities conform to a fairly definite aerial pattern which reflects general effects of topographic differences.

**Desert Areas**

Summer convective rainfall is principally experienced in the upper San Gabriel Mountains and the Mojave Desert regions. In many desert areas, the most serious flooding occurs as a result of summer convective storms.

**Mountain Areas**

In mountain areas, the steep canyon slopes and channel gradients promote a rapid concentration of storm runoff. Depression storage and detention storage effects are minor in the rugged terrain. Soil moisture during a storm has a pronounced effect on runoff from the porous soils supporting a good growth of deep-rooted vegetation such as chaparral. Soil moisture deficiency is greatest at the beginningof a rainy season, having been depleted by the evapotranspiration process during the dry summer.

months. Precipitation during periods of soil moisture deficiency is nearly entirely absorbed by soils, and except for periods of extremely intense rainfall, significant runoff does not occur until soils are wetted to capacity. Due to high infiltration rates and porosity of mountain soils, runoff occurs primarily as subsurface flow or interflow in addition to direct runoff. Spring or base flow is essentially limited to portions of the San Gabriel Mountain range. Consequently, most streams in the County are intermittent.

Runoff from a mountain watershed recently denuded by fire exceeds that for the unburned state due to greatly increased quantities of inorganic debris present in the flow and increased direct runoff resulting from lowered infiltration rates. Debris production from a major storm has amounted to as much as 223,000 cubic yards per square mile of watershed. Boulders up to eight feet in diameter have been deposited in valley areas a considerable distance from their source.

Debris quantities equal in volume to the storm runoff (100 percent bulking) have been recorded in major storms. Where debris-laden flow traverses an alluvial fill unconfined by flood control works, flood discharges follow an unpredictable path across the debris cone formed at the canyon mouth.

**Hilly and Valley Areas**

In hilly areas, runoff concentrates rapidly from the generally steep slopes; however, runoff rates from undeveloped hilly areas are normally smaller than those from mountain areas of the same size. In those hilly areas which were developed for residential use, concentration times become considerably decreased due to drainage improvement, and runoff volumes and rates have increased due to increased imperviousness. On the other hand, erosion is controlled and debris is minimized from storm flows. Debris production rates from undeveloped hill areas are normally smaller than those from mountain areas of the same size.

In highly developed valley areas, local runoff volumes increased as the soil surface became covered by impervious materials. Peak runoff rates for valley areas also increased due to elimination of natural ponding areas and improved hydraulic efficiency of water carriers such as streets and storm drain systems.

# LOS ANGELES COUNTY FLOOD CONTROL DISTRICT

Flood Control & Water Conservation

## FLOODS – *An Old Story….*

Floods in the County of Los Angeles were recorded as far back as the days of the Mission Padres. For centuries' waters have swept out of the San Gabriel Mountains causing extensive property damage and taking a great toll of lives. Such a flood occurred in 1914 causing over $10 million in property damage and taking many lives. As a result, the State legislature in 1915 enacted the statute creating the Los Angeles County Flood Control District. The responsibilities and authority vested in the Flood Control District were, in 1985, transferred to and are now part of the County of Los Angeles of Public Works.

Public Works, under the Flood Control Act, has the following tasks:

1. Protect from flood or storm waters the harbors, waterways, public highways, and property in the district.
2. Conserve water for beneficial and useful purposes.
3. Provide for public use of navigable waterways under the district's control that are suitable for recreational and educational purposes.

## FLOOD CONTROL

Successful early bond issues financed the construction of dams built in the San Gabriel Mountains and foothills to impound storm waters until they could be safely released. Debris basins were constructed to trap eroded materials which caused terrible damage in the past. Flood channel improvements were undertaken to confine the waters and convey them safely through the urbanized areas to the ocean.

District engineers prepared a Comprehensive Plan in the early 1930s to control flooding and save as much of the water as practicable when fully implemented. Federal legislation in 1936 brought the U.S. Army Corps of Engineers into the local flood control picture. Since that time, the two agencies have been jointly pursuing implementation of the Comprehensive Plan. Public Works also cooperates with the U.S. Natural Resources Conservation Service and Forest Service in erosion control.

## WATER CONSERVATION

In addition to its flood control program, Public Works has the equally important mission of conserving as much of the storm and other waste waters as practicable. The use of water conservation facilities in or adjacent to river channels and their tributaries permits water to be percolated into groundwater aquifers or basins for later pumping and supply to consumers. These water conservation facilities are located in areas where the underlying soils are composed of porous sands and gravel formations. Some are shallow and resemble rice paddies, while others are deep basins which were once gravel pits.

The importance of this activity is apparent when it is realized that about 30 to 40 percent of the water used in the County is pumped from groundwater supplies. The growth of the County, combined with periodic droughts, seriously depleted these supplies on numerous occasions throughout the history of the County.

Other major conservation efforts by Public Works include combating the serious salt water intrusion into groundwater supplies inland from the Pacific Ocean and utilizing imported and reclaimed water to help replenish groundwater supplies.

## ORGANIZED TO THE JOB

Day-to-day administration of Public Works affairs is vested in the Director of Public Works who is appointed by and responsible to the Los Angeles County Board of Supervisors. A part of Public Works' activities involve the planning, design, and construction of flood control and water conservation facilities, and the operation and maintenance of dams, debris basins, spreading grounds, channels, and storm drains.

# PRECIPITATION

Public Works operates and maintains a network of 230 standard and automatic rain gages to collect rainfall (precipitation) data for the purposes of in-house engineering and design of flood control and water conservation facilities

## RAINFALL AMOUNTS

Daily and annual rainfall amounts for the reporting period collected by Public Works' active standard rain gages are published in this volume. Although Public Works operates and maintains both standard and automatic rain gages whose recording durations range from 5 minutes to 24 hours, only daily and annual amounts from standard rain gages are published herein. Additional data (e.g., intensities, automatic rain gage data, partial data) may be obtained by contacting the custodian of hydrologic records. Active rain gage stations whose records are incomplete are denoted accordingly and no data is published.

## ALERT SYSTEM
*Automated Local Evaluation in Real Time*

Public Works operates and maintains a state-of-the-art ALERT computer system to monitor meteorological conditions in the County and Southern California in real time, i.e., as they occur. The system includes a network of field sensors that monitor and receive precipitation amounts including rainfall data from the Corps of Engineers' Los Angeles Telemetry System. All ALERT stations have been upgraded to a new, more robust system named ALERT2.

.

## COOPERATION

The cooperation of observers in furnishing rainfall data to Public Works as a public service is appreciated. The efforts of the many agencies and individuals who so freely cooperated with us in the collection of this data resulted in the large number of complete records for the period covered by this report.

Data from 22 stations of Public Works' records are reported and published by the National Oceanic and Atmospheric Administration (NOAA)

## CUSTODIAN

Unpublished information may be obtained by contacting:

**County of Los Angeles Public Works**
**Stormwater Engineering Division**
**P.O.Box146**
**Alhambra,CA91802-1460**
**(626) 458-6120**

# PRECIPITATION

## RAINFALL INDICES

*Using Selected Stations for the Period October 1, 201**9** through September 30, 20**20***

| Area | Percent of Area | Seasonal Normal (inches) | Total Precipitation (inches) | Percent of Seasonal Normal |
|---|---|---|---|---|
| A. Coastal Plain | 14.1 | 13.75 | 13.89 | 101 |
| B. San Fernando Valley | 7.9 | 17.10 | 17.96 | 105 |
| C. San Gabriel Valley | 7.5 | 17.01 | 16.97 | 100 |
| D. San Gabriel Mountains | 13.4 | 26.63 | 23.21 | 87 |
| E. Little Rock, Big Rock | 4.5 | 17.61 | 17.68 | 100 |
| F. Santa Monica Mountains | 5.7 | 19.89 | 18.06 | 91 |
| G. Santa Clara | 18.9 | 16.52 | 17.08 | 103 |
| H. Desert | 28.0 | 6.65 | 10.07 | 151 |
| County* | 100.0 | 15.04 | 15.63 | 104 |
| Los Angeles (Station No. 716) ** | | 15.37 | 15.19 | 99 |
| Cogswell Dam (Station No. 334-B)** | | 33.31 | 29.33 | 88 |

** Seasonal Normal and Total Precipitation to Date sections of this line are derived from Areal Weighted Average.*
*** Automatic gage.*

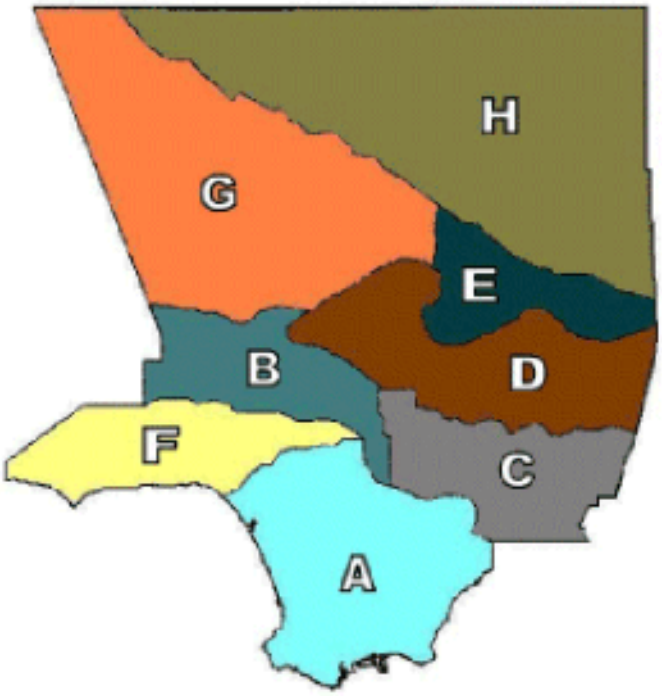

# PRECIPITATION

## Active Daily Rain Gage Stations During Water Year 2019 - 2020

| Station ID | Station Name | Gage Type | Thomas Guide Page | North Latitude | West Longitude | Gage Elev. (ft) | Season Total (in) | Notes |
|---|---|---|---|---|---|---|---|---|
| 13C | North Hollywood-Lakeside | S | 563 B5 | 34-08-46 | 118-21-13 | 550 | 16.79 | A |
| 21B | Woodland Hills | S | 560 A2 | 34-10-14 | 118-35-33 | 875 | 16.98 | A |
| 33A | Pacoima Dam | SA | 4642 F7 | 34-19-48 | 118-23-59 | 1500 | 21.02 | E |
| 42C | Redondo Beach-City Hall | S | 762 G5 | 33-50-43 | 118-23-20 | 70 | 11.23 | |
| 43D | Palos Verdes Estates | S | 792 H4 | 33-47-58 | 118-23-29 | 216 | 12.93 | A |
| 46D | Big Tujunga Dam | SA | 4725 C6 | 34-17-40 | 118-11-14 | 2315 | 21.58 | |
| 89B | San Dimas Dam | SA | 570 F2 | 34-09-10 | 117-46-17 | 1350 | 20.99 | A |
| 93C | Claremont-Police Station | S | 601 C3 | 34-05-45 | 117-43-18 | 1170 | 17.62 | A |
| 96C | Puddingstone Dam | SA | 600 B4 | 34-05-31 | 117-48-24 | 1030 | 17.48 | E |
| 125B | San Francisquito Canyon Ph#1 - Saugus | S | X | 34-35-25 | 118-27-15 | 2105 | 19.17 | |
| 134C | Puddingstone Diversion | SA | 570 F5 | 34-07-52 | 117-46-55 | 1160 | 18.82 | A |
| 144 | Sierra Madre Dam | S | 537 B4 | 34-10-34 | 118-02-32 | 1100 | 21.38 | A |
| 169 | Sierra Madre Pumping Plant | S | 567 B2 | 34-09-47 | 118-02-21 | 700 | 18.75 | |
| 175B | La Canada Irrigation District | S | 535 A1 | 34-13-39 | 118-12-40 | 2020 | 22.25 | A |
| 176 | Altadena-Rubio Canyon | S | 536 A1 | 34-10-55 | 118-08-15 | 1125 | 19.02 | E |
| 216C | Glendale - Jackson | SP | 564 F5 | 34-09-54 | 118-15-01 | 615 | 18.15 | A |
| 223C | Big Dalton Dam | SA | 570 B1 | 34-10-06 | 117-48-36 | 1587 | 22.71 | E |
| 225 | Montana Ranch-Lakewood | S | 766 C4 | 33-50-35 | 118-07-09 | 47 | 16.21 | A |
| 228C | Beverly Hills City Hall | S | 632 G1 | 34-06-00 | 118-23-40 | 245 | 14.38 | A |
| 251C | La Crescenta | S | 534 F1 | 34-13-20 | 118-14-40 | 1440 | 20.52 | A |
| 252C | Castaic Lake | S | 4369 | 34-29-53 | 118-36-53 | 1150 | 16.23 | |
| 287B | Glendora-City Hall | S | 569 E5 | 34-08-09 | 117-51-52 | 785 | 20.04 | A |
| 294B | Sierra Madre-Mira Monte Pumping Plant | S | 567 A1 | 34-10-11 | 118-02-51 | 985 | 21.33 | |
| 322 | Munz Valley Ranch | SP | 4013 A4 | 34-42-50 | 118-21-15 | 2600 | 13.98 | A |
| 334B | Cogswell Dam | SA | XI | 34-14-37 | 117-57-35 | 2300 | 30.17 | |
| 372 | San Francisquito Power House No.2 | SA | X | 34-32-02 | 118-31-27 | 1580 | 21.22 | |
| 373C | Briggs Terrace | SP | 504 H6 | 34-14-17 | 118-13-27 | 2200 | 24.44 | |
| 387B | Covina City Yard | S | 599 B5 | 34-05-02 | 117-53-57 | 508 | 14.59 | A |
| 390B | Morris Dam | SA | 539 C6 | 34-10-53 | 117-52-43 | 1210 | 21.14 | |
| 405B | Soledad Canyon | SP | 4463 J6 | 34-26-23 | 118-17-33 | 2150 | 15.95 | |
| 406C | West Azusa | S | 598 H2 | 34-06-53 | 117-54-56 | 505 | 16.94 | A |
| 409B | Pyramid Reservoir | S | X | 34-40-34 | 118-46-47 | 2505 | 17.14 | E |
| 425B | San Gabriel Dam | SA | 509 E3 | 34-12-19 | 117-51-38 | 1481 | 25.01 | |
| 436C | Hansen Dam | S | 502 G3 | 34-16-08 | 118-23-59 | 1110 | 16.02 | |
| 445B | Live Oak Dam | SA | 570 J5 | 34-08-02 | 117-44-38 | 1510 | 15.15 | E |

LEGEND

S Standard Gage
SP Standard Private
DA Daily Automatic
A Automatic Recording Gage

NOTES:

E Estimate
A Accumulated Total

# PRECIPITATION

## Active Daily Rain Gage Stations During Water Year 2019 - 2020

| Station ID | Station Name | Gage Type | Thomas Guide Page | North Latitude | West Longitude | Gage Elev. (ft) | Season Total (in) | Notes |
|---|---|---|---|---|---|---|---|---|
| 449B | Eaton Wash Dam | SA | 566 E1 | 34-10-06 | 118-05-33 | 880 | 18.36 | A |
| 453D | Devil's Gate Dam | SA | 535 E7 | 34-10-53 | 118-10-27 | 980 | 19.79 | A |
| 465C | Sepulveda Dam | S | 561 G2 | 34-10-06 | 118-28-11 | 683 | 17.92 | |
| 482 | Los Angeles-U.S.C. | S | 674 A1 | 34-01-14 | 118-17-15 | 208 | 14.82 | |
| 497 | Claremont-Slaughter | SP | 571 B7 | 34-07-35 | 117-43-55 | 1350 | 18.80 | A |
| 542 | Fairmont | S | X | 34-42-15 | 118-25-40 | 3050 | 15.72 | |
| 591B | Santa Anita Reservoir | S | 536 E7 | 34-11-08 | 118-06-16 | 1205 | 19.54 | |
| 598D | Neenach-Check 43-California D.W.R. | S | X | 34-47-40 | 118-37-15 | 2965 | 13.03 | A |
| 610B | Pasadena-City Hall | DA | 565 J4 | 34-08-54 | 118-08-36 | 864 | 19.77 | E |
| 612B | Pasadena-Chlorine Plant | S | 535 F3 | 34-12-04 | 118-09-49 | 1160 | 20.07 | A |
| 613C | Pasadena Fire Station | S | 566 A6 | 34-07-15 | 118-08-05 | 779 | 18.49 | A |
| 626 | Thompson Creek Dam Precipitation | SA | 571 D4-E4 | 34-08-26 | 117-42-39 | 1670 | 18.87 | A |
| 634C | Santa Monica | S | 671 E2 | 34-00-43 | 118-29-27 | 94 | 14.37 | E |
| 662D | Long Beach Airport | S | 791 J1 | 33-49-00 | 118-09-00 | 34 | 14.21 | |
| 680B | Westwood (U.C.L.A.) | S | 632 B1 | 34-04-10 | 118-26-30 | 430 | 15.67 | |
| 683B | Sunset Ridge | S | 535 F5 | 34-12-53 | 118-08-47 | 2110 | 21.78 | |
| 734C | Los Angeles International Airport | S | 702 G5 | 33-56-25 | 118-23-44 | 105 | 13.14 | |
| 742C | San Gabriel Fire Department | S | 596 F4 | 34-06-11 | 118-05-56 | 445 | 15.83 | A |
| 747 | Sandberg-Airways Station | SA | X | 34-44-47 | 118-43-29 | 4517 | 15.42 | |
| 749B | Burbank Valley Pump Plant | S | 533 C6 | 34-11-11 | 118-20-54 | 655 | 16.40 | E |
| 750B | Palmdale-F.A.A. Airport | S | 4196 E5 | 34-37-20 | 118-05-00 | 2528 | 8.69 | |
| 795 | Pasadena-Jourdan | S | 566 F5 | 34-08-52 | 118-05-14 | 705 | 16.63 | |
| 1037 | Arcadia-Arboretum | S | 567 A5 | 34-08-48 | 118-02-59 | 565 | 16.92 | A |
| 1041B | Santa Fe Dam | S | 598 A | 34-07-04 | 117-58-24 | 427 | 16.88 | |
| 1051B | Canoga Park-Pierce College | S | 530 D | 34-10-51 | 118-34-23 | 800 | 17.48 | |
| 1081B | Glendale-Gregg | SP | 534 F | 34-11-45 | 118-14-30 | 1350 | 20.20 | |
| 1088B | La Habra Heights-Mutual Water Co. | SA | 708 D | 33-56-55 | 117-57-51 | 445 | 15.23 | A |
| 1095 | Orange County Reservoir | S | OC 2 F | 33-56-07 | 117-52-58 | 660 | 14.92 | |
| 1114B | Whittier Narrows Dam | S | 636 H | 34-01-29 | 118-05-02 | 239 | 14.74 | |
| 1115 | San Antonio Dam | S | 571 J | 34-09-24 | 117-40-20 | 2120 | 21.02 | |
| 1158 | Torrance Municipal Airport | S | 793 E | 33-47-59 | 118-20-08 | 102 | 14.65 | A |
| 1212 | Lancaster FSS/FAA | S | 4014 | 34-44-00 | 118-13-00 | 2340 | 11.16 | E |
| 1217 | Los Angeles Country Club | S | 632 D | 34-04-10 | 118-25-17 | 380 | 15.45 | A |
| 1222 | Northridge-Garland | SP | 501 C | 34-14-17 | 118-30-59 | 911 | 18.31 | |
| 1240 | Pearblossom-Calif.D.W.R. Booster Sta. | S | 4378 | 34-30-32 | 117-55-15 | 3050 | 10.56 | A |

LEGEND

S Standard Gage
SP Standard Private
DA Daily Automatic
A Automatic Recording Gage

NOTES:

E Estimate
A Accumulated Total

# PRECIPITATION

## Active Daily Rain Gage Stations During Water Year 2019 - 2020

| Station ID | Station Name | Gage Type | Thomas Guide Page | North Latitude | West Longitude | Gage Elev. (ft) | Season Total (in) | Notes |
|---|---|---|---|---|---|---|---|---|
| 1252 | Palos Verdes Landfill | S | 793 D | 33-45-40 | 118-20-03 | 400 | 16.90 | A |
| 1253 | Carson-County Sanitation | S | 794 C | 33-48-07 | 118-16-58 | 40 | 11.96 | A |
| 1254 | Long Beach Reclamation Plant | S | 796 G | 33-48-11 | 118-05-20 | 20 | 12.88 | A |
| 1255 | Los Coyotes Reclamation Plant | S | 736 E | 33-53-05 | 118-06-24 | 70 | 15.46 | A |
| 1256 | South Gate Transfer Station | S | 705 G | 33-56-40 | 118-09-56 | 100 | 12.39 | A |
| 1257 | San Jose Creek Reclamation Plant | S | 637 F | 34-01-55 | 118-01-16 | 275 | 16.03 | A |
| 1258 | Puente Hills Landfill | S | 637 D | 34-01-35 | 118-01-49 | 300 | 18.50 | A |
| 1259 | Whittier Narrows Reclamation Plant | S | 636 J | 34-03-59 | 118-03-54 | 225 | 14.45 | E |
| 1260 | Spadra Landfill | S | 640 A | 34-02-36 | 117-49-50 | 700 | 16.04 | A |
| 1261 | La Canada Reclamation Plant | S | 535 D | 34-13-00 | 118-11-14 | 1800 | 19.88 | E |
| 1262 | Saugus Reclamation Plant | S | 4550 | 34-24-48 | 118-32-23 | 1150 | 14.74 | A |
| 1263 | Valencia Reclamation Plant | S | 4549 | 34-25-55 | 118-37-13 | 1000 | 14.03 | A |
| 1264 | Calabasas Landfill | S | 558 G | 34-08-25 | 118-42-35 | 800 | 15.52 | A |
| 1265 | Scholl Canyon Landfill | S | 565 C | 34-08-38 | 118-11-07 | 1000 | 16.65 | A |
| 1267 | Lancaster Reclamation Plant | S | 3925 | 34-46-38 | 118-09-11 | 2302 | 9.72 | A |
| 1268 | Palmdale Reclamation Plant | S | 4196 | 34-35-30 | 118-05-10 | 2565 | 8.99 | A |
| 1271 | Pomona Waste Reclamation Plant | S | 640 E | 34-03-18 | 117-47-34 | 786 | 17.23 | A |
| 1274 | Whittier - Valna Drive | SP | 707 F | 33-57-39 | 118-01-10 | 255 | 15.08 | |

LEGEND

S Standard Gage
SP Standard Private
DA Daily Automatic
A Automatic Recording Gage

NOTES:

E Estimate
A Accumulated Total

## PRECIPITATION

# DAILY RAINFALL SUMMARY

*(See Appendix A)*

# PRECIPITATION

## Rain Gage Locations

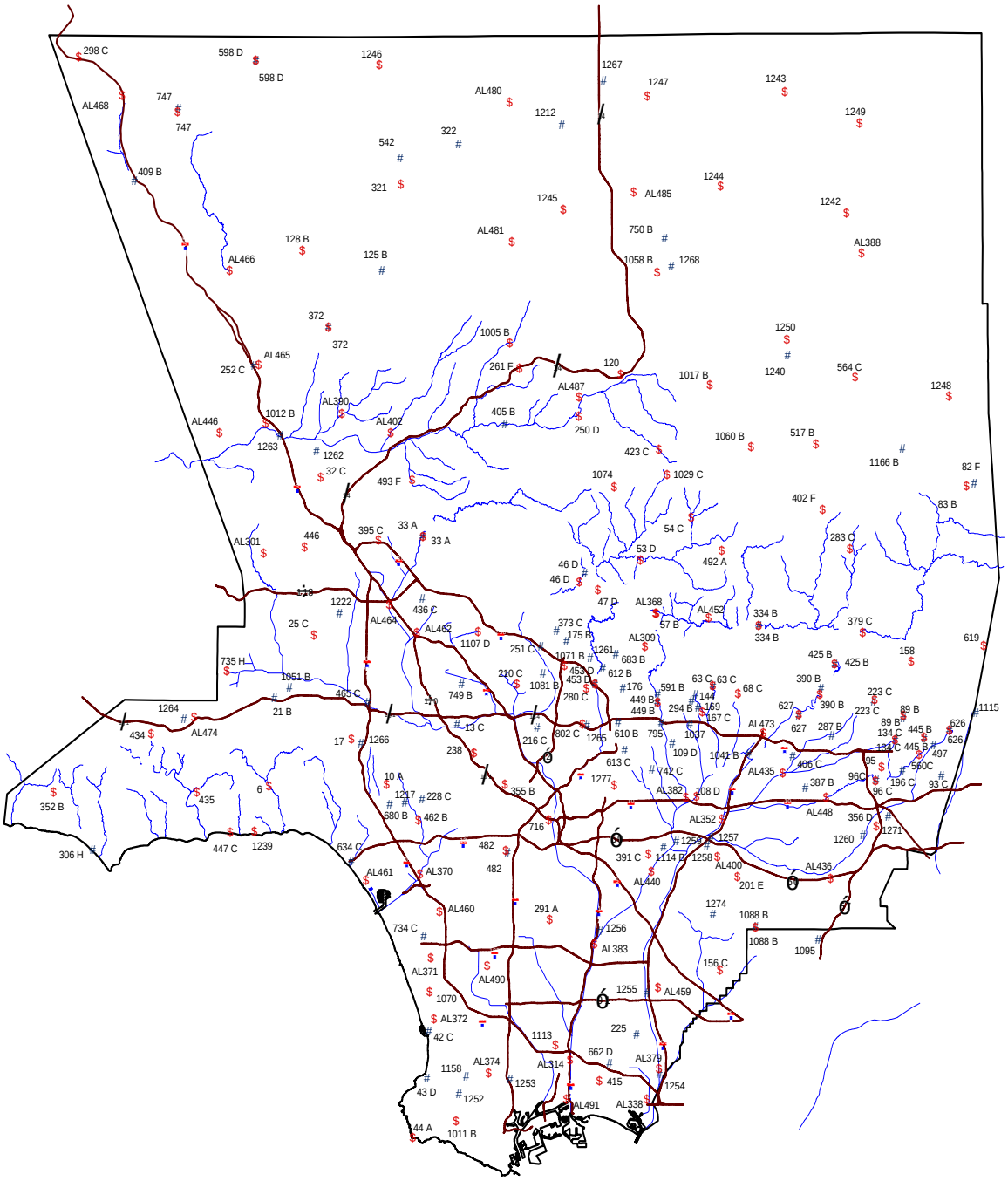

**LEGEND**

ALERT RAIN GAGE

STANDARD RAIN GAGE

10 0 10 20 Miles

SCALE

N

Public Works
LOS ANGELES COUNTY

# EVAPORATION

Public Works, the Metropolitan Water District, Palmdale Water District, the California Dept. of Water Resources, and Descanso Gardens provided daily evaporation data for 13 evaporation stations during the reporting period. Monthly and Seasonal summaries are provided in the report. Daily records of active and inactive stations are available in Public Works' files, along with some data for other agencies and districts. This data can be obtained by contacting the custodian of hydrologic records.

## LENGTH OF RECORD

The Los Angeles County Flood Control District (now administered by Public Works) installed its first evaporation pan in March 1929 at Santa Anita Dam. Public Works has data for 37 evaporation stations which have monthly evaporation for more than 15 seasons.

## CUSTODIAN

Unpublished information may be obtained by contacting:

County of Los Angeles Public Works
Stormwater Engineering Division
P.O. Box 1460
Alhambra, CA 91802-1460
(626) 458-6120

## ACTIVE STATIONS

| ID | Station Name | Equipment | Pan Elev. | Thomas Guide | North Latitude | West Longitude |
|---|---|---|---|---|---|---|
| 33-A | Pacoima Dam | 24X36 S | 1500 ft. | 482 F1 | 34-19-48 | 118-23-59 |
| 46-D | Big Tujunga Dam | 24X36 S | 2315 ft. | 4725 C5 | 34-17-40 | 118-11-14 |
| 63-C | Santa Anita Dam | 24X36 S | 1400 ft. | 537 E6 | 34-11-03 | 118-01-12 |
| 89-B | San Dimas Dam | 24X36 S | 1350 ft. | 570 F3 | 34-09-10 | 117-46-17 |
| 96-C | Puddingstone Dam | 24X36 S | 1030 ft. | 600 B4 | 34-05-31 | 117-48-24 |
| 223-B | Big Dalton Dam | 24X36 S | 1587 ft. | 570 B1 | 34-10-06 | 117-48-36 |
| 252-C | Castaic Reservoir | 48X10 S | 1150 ft. | 4369 H6 | 34-29-53 | 118-36-53 |
| 334-B | Cogswell Dam | 24X36 S | 2300 ft. | 508 B5 | 34-14-37 | 117-57-35 |
| 390-B | Morris Dam | 72X36 US | 1210 ft. | 539 C7 | 34-10-53 | 117-52-43 |
| 409-B | Pyramid Reservoir | 48X10 S | 2505 ft. | 593 E1 | 34-40-34 | 118-46-47 |
| 425-B | San Gabriel Dam | 24X36 S | 1481 ft. | 539 E3 | 34-12-19 | 117-51-38 |
| 1058-B | Palmdale | 24X36 S | 2595 ft. | 4196 D6 | 34-35-17 | 118-05-31 |
| 1240 | Pearblossom | 24X36 S | 3030 ft. | 4378 F3 | 34-30-32 | 117-55-15 |

**FOOTNOTES**

**24X36 S** Screened land pan, 24 inches in diameter by 36 inches deep.
**48X10 S** Screened land pan, 48 inches in diameter by 10 inches deep.
**72X36 US** Unscreened land pan, 72 inches in diameter by 36 inches deep.

# EVAPORATION

## MONTHLY SUMMARY

| ID | Station Name | Oct | Nov | Dec | Jan | Feb | Mar | Apr | May | Jun | Jul | Aug | Sep | Total |
|---|---|---|---|---|---|---|---|---|---|---|---|---|---|---|
| 33-A | Pacoima Dam | [ ] | [ ] | [ ] | [ ] | [ ] | [ ] | [ ] | [ ] | [ ] | [ ] | [ ] | [ ] | [ ] |
| 46-D | Big Tujunga Dam | [ ] | [ ] | [ ] | [ ] | [ ] | [ ] | [ ] | [ ] | [ ] | [ ] | [ ] | [ ] | [ ] |
| 63-C | Santa Anita Dam | [ ] | [ ] | [ ] | [ ] | [ ] | [ ] | [ ] | [ ] | [ ] | [ ] | [ ] | [ ] | [ ] |
| 89-B | San Dimas Dam | [ ] | [ ] | [ ] | [ ] | [ ] | [ ] | [ ] | [ ] | [ ] | [ ] | [ ] | [ ] | [ ] |
| 96-C | Puddingstone Dam | 6.45 | 3.91 | 1.77 | 2.08 | 3.33 | 3.10 | 3.67 | 7.32 | 7.30 | 8.90 | 8.99 | 7.75 | 64.57 |
| 223-C | Big Dalton Dam | 7.09 | 4.52 | 1.92 | 2.49 | 4.37 | 3.77 | 4.91 | 7.75 | 7.32 | 9.59 | [ 7.57 ] | [ 8.27 ] | [ 69.57 ] |
| 252-C* | Castaic Dam | 7.39 | 4.69 | 2.64 | 2.61 | 3.21 | 2.55 | 4.99 | 7.40 | 8.22 | 10.93 | 11.19 | 10.11 | 75.93 |
| 334-B | Cogswell Dam | 5.14 | 3.64 | 0.98 | 1.30 | 3.36 | 3.76 | 3.58 | 7.87 | 7.96 | 8.85 | 9.06 | [ 2.79 ] | [ 58.29 ] |
| 390-B | Morris Dam | 8.26 | 5.39 | 2.39 | 4.03 | 4.57 | 4.13 | 4.43 | 9.43 | 8.83 | 11.27 | 11.63 | 9.89 | 84.25 |
| 409-B* | Pyramid Reservoir | 7.50 | [ 5.89 ] | 3.01 | 2.76 | 2.17 | 2.78 | 5.61 | 6.84 | 9.78 | 10.35 | 12.11 | [ 9.99 ] | [ 78.79 ] |
| 425-B | San Gabriel Dam | 9.00 | 6.41 | 2.78 | 3.35 | 4.78 | 3.58 | 4.31 | 7.89 | 7.89 | 9.92 | 10.35 | 9.85 | 80.11 |
| 1240* | Pearblossom | [ 5.10 ] | [ 2.81 ] | [ ] | [ 2.82 ] | [ 2.20 ] | [ 1.59 ] | [ 3.69 ] | [ 4.15 ] | [ 9.71 ] | [ 10.72 ] | [ 8.08 ] | [ 10.70 ] | [ 61.57 ] |

Units are in inches.
[ ] Records Incomplete.
* Department of Water Resources.

# EVAPORATION

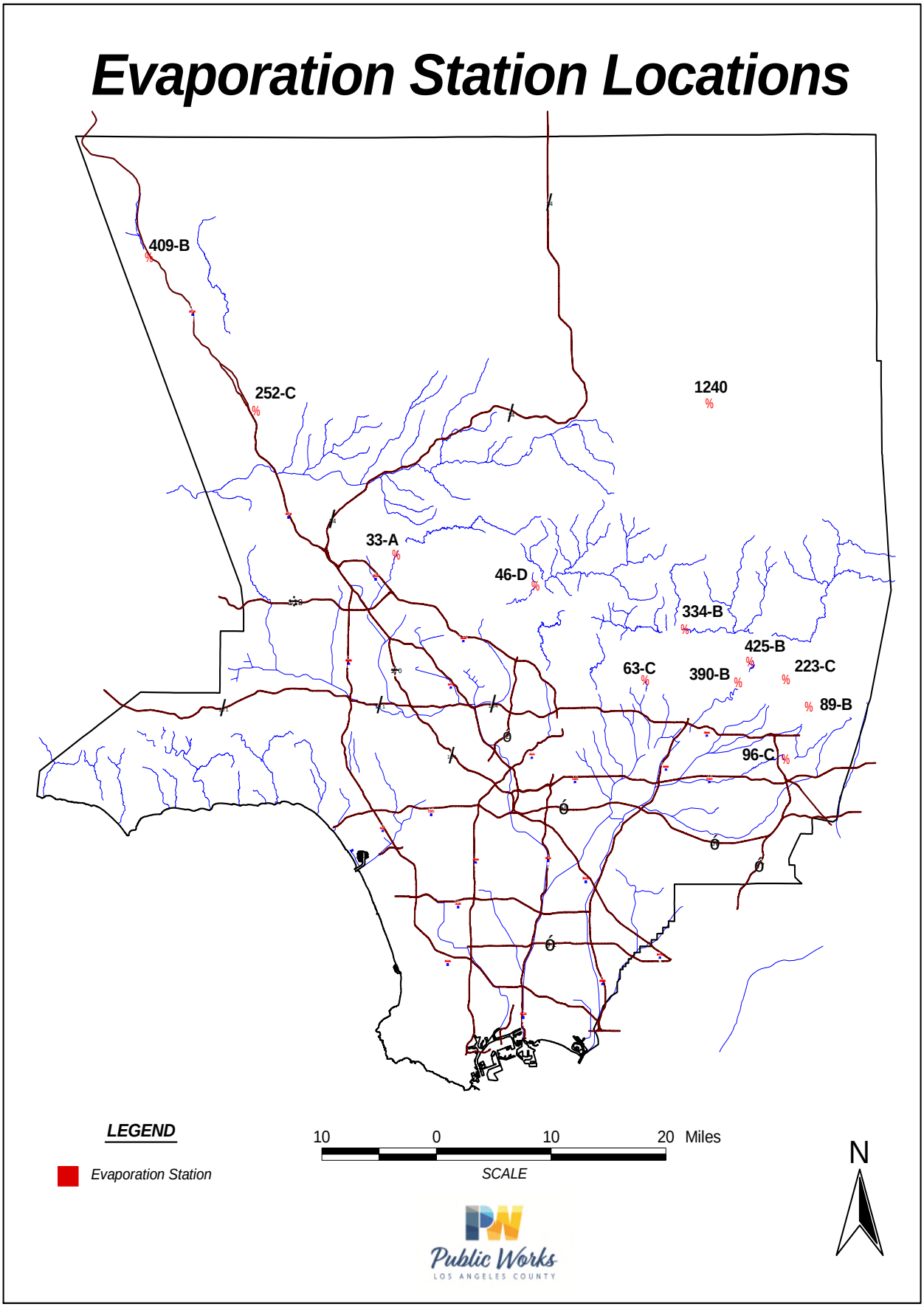

# RUNOFF

Public Works operated 62 stream gaging stations during the 2019-20 water year. Mean daily flow maximum instantaneous flow rates for each station are summarized and published in this volume. Annual summaries of peak flows and volumes are also provided. Additional data can be obtained by contacting the custodian of hydrologic records.

## LEGEND

Stations are designated by letters and numbers which indicate ownership, operation agency, and type of station.

- Prefix **F** - Indicates a station originally owned and operated by the Los Angeles County Flood Control District and now owned and operated by Public Works.
- Prefix **E** - Indicates a station owned by the U.S. Army Corps of Engineers, but operated and maintained by the U.S. Geological Survey.
- Prefix **U** or **G** - Indicates a station originally constructed and operated by the U.S. Geological Survey, but now operated by Public Works.
- Prefix **L** - Indicates a station formerly owned by the Little Rock Water District, but now owned and operated by Public Works.
- Suffix **R** - Indicates a recorder station.
- Suffix **B, C** - Indicates that the station has been moved from its original location. B represents second location, C a third location, etc.

## ALERT SYSTEM
*Automated Local Evaluation in Real Time*

Public Works operates and maintains a state-of-the-art ALERT computer system to monitor meteorological conditions at 24 river stage locations in the County. Public Works' ALERT System also receives rainfall, streamflow, and reservoir data from the Corps of Engineers' Los Angeles Telemetry System. All ALERT stations have been upgraded to a new, more robust system named ALERT2.

## COOPERATION

Public Works receives or has access to stream flow data from other agencies. Public Works exchanges data with the following agencies:

- U.S. Geological Survey, Water Resource Division
- U.S. Army Corps of Engineers
- State Department of Water Resources
- The Metropolitan Water District of Southern California
- San Gabriel River Water Committee

## CUSTODIAN

Unpublished information may be obtained by contacting:

County of Los Angeles Public Works
Stormwater Engineering Division
P.O. Box 1460 Alhambra, CA 91802-1460
(626) 458-6120

# RUNOFF

## Index of Stream Gaging Stations

| Station ID | Station Name | Thomas Guide Page | Regulated | Drainage Area Sq.Mile | Length Of Record |
|---|---|---|---|---|---|
| F81D-R | ALHAMBRA WASH above Klingerman Street | 636 G3 | No | 15.2 | 09/02/1936 |
| F317-R | ARCADIA WASH below Grand Avenue | 597 C4 | Yes | 8.5 | 12/12/1955 |
| F277-R | ARROYO SECO below Devils Gate Dam | 535 E7 | Yes | 32.5 | 11/30/1942 |
| F38C-R | BALLONA CREEK above Sawtelle Blvd. | 672 G4 | Yes | 88.6 | 08/10/1967 |
| F120B-R | BIG DALTON CREEK below Big Dalton Dam | 509/540 | Yes | 4.8 | 06/03/1940 |
| F394-R | BIG ROCK CREEK upstream from Pallett Creek | 4469 D3 | No | 34.3 | 10/01/1986 |
| F168B-R | BIG TUJUNGA CREEK below Big Tujunga Dam | 4645/4725 | Yes | 82.3 | 12/08/1931 |
| F377B-R | BOUQUET CREEK above Bouquet Canyon Road | 4461 C5 | Yes | 60.9 | 10/01/2003 |
| F329-R | BRADBURY CHANNEL below Central Avenue | 568 C5 | Yes | 3.3 | 06/14/1957 |
| F342-R | BRANFORD STREET CHANNEL below Sharp Avenue | 502 E7 | Yes | 5.0 | 01/12/1962 |
| E285-R | BURBANK WESTERN STORM DRAIN at Riverside Dr. | 563 H3 | Yes | 25.0 | 10/01/1949 |
| F37B-R | COMPTON CREEK near Greenleaf Drive | 734 J6 | No | 22.6 | 10/03/1938 |
| F354-R | COYOTE CREEK below Spring Street | 796 H2 | Yes | 185.0 | 12/17/1963 |
| F274B-R | DALTON WASH at Merced Avenue | 638 D1 | Yes | 36.0 | 11/02/1958 |
| F318-R | EATON WASH at Loftus Drive | 597 A7 | Yes | 22.8 | 02/23/1956 |
| F271-R | EATON WASH below Eaton Wash Dam | 566 F1 | Yes | 12.4 | 10/01/1940 |
| U7-R | FISH CREEK above mouth of canyon | 568 G1 | No | 6.4 | 07/01/2017 |
| L1-R | LITTLE ROCK CREEK above Little Rock Dam | 4467 D2 | No | 49.2 | 10/01/1930 |
| F356-R | LIVE OAK CREEK below Live Oak Dam | 571 A5 | Yes | 2.3 | 11/29/1963 |
| F319-R | LOS ANGELES RIVER below Wardlow River Road | 765 C1 | Yes | 815.0 | 01/13/1956 |
| F300-R | LOS ANGELES RIVER at Tujunga Avenue | 562 J6 | Yes | 401.0 | 05/08/1950 |
| F57C-R | LOS ANGELES RIVER above Arroyo Seco | 594 H6 | Yes | 511.0 | 12/08/1983 |
| F130-R | MALIBU CREEK below Cold Creek | 628 H1 | Yes | 105.0 | 01/17/1931 |
| F395-R | MESCAL CREEK at mouth of canyon | 4471 D4 | Yes | 5.4 | 01/28/1983 |
| F328B-R | MINT CANYON CREEK at Sierra Highway | 4462 C6 | No | 28.0 | 10/01/2003 |
| F181-R | MONTEBELLO STORM DRAIN above Rio Hondo | 676 E4 | No | 9.6 | 01/12/1932 |
| F118C-R | PACOIMA CREEK FLUME below Pacoima Dam | 4642 F7 | Yes | 28.2 | 02/09/1935 |
| F305-R | PACOIMA DIVERSION at Branford Street | 502 D7 | Yes | 48.8 | 10/30/1953 |
| F122-R | PALLETT CREEK at Valyermo Highway | 4469 D2 | No | 15.8 | 10/31/1961 |
| F45B-R | RIO HONDO above Stuart and Gray Road | 705 G4 | Yes | 140.0 | 11/20/1951 |
| F192B-R | RIO HONDO below Lower Azusa Avenue | 597 D5 | Yes | 40.9 | 12/18/1958 |
| F313B-R | RIO HONDO BYPASS - Zone 1 Ditch | 637 A7 | Yes | Controlled | 11/28/1983 |
| F338-R | RUBIO DIVERSION CHANNEL below Gooseberry Inlet | 536 C5 | Yes | 2.1 | 12/16/1959 |
| F82C-R | RUBIO WASH at Glendon Way | 596 H7 | Yes | 10.9 | 11/06/1936 |
| F303-R | SAN DIMAS CREEK below San Dimas Dam | 570 F2 | Yes | 16.2 | 12/24/1951 |
| F218-R | SAN DIMAS WASH below Puddingstone Diversion | 570 E5 | Yes | 19.9 | 01/26/1933 |
| F250-R | SAN GABRIEL - AZUSA Conduit 25 Ft. Weir Below S.G. Dam | 509/539 | Yes | 202.7 | 02/14/1935 |
| F220B-R | SAN GABRIEL - AZUSA Conduit 10 Ft. Weir Below S.G. Dam | 509/539 | Yes | 0 | 10/23/1963 |

# RUNOFF

## Index of Stream Gaging Stations

| Station ID | Station Name | Thomas Guide Page | Regulated | Drainage Area Sq.Mile | Length Of Record |
|---|---|---|---|---|---|
| F262C-R | SAN GABRIEL RIVER above Florence Avenue | 706 E5 | Yes | 215.8 | 08/06/1968 |
| F42B-R | SAN GABRIEL RIVER above Spring Street | 796 G1 | Yes | 231.0 | 11/16/1964 |
| F263C-R | SAN GABRIEL RIVER below San Gabriel River Pkwy | 676 J2 | Yes | 206.3 | 08/09/1968 |
| F190-R | SAN GABRIEL RIVER at Foothill Blvd. | 568 E5 | Yes | 230.0 | 04/25/1932 |
| E281-R | SAN GABRIEL RIVER below Santa Fe Dam | 568 B2 | Yes | 239.0 | 02/09/1943 |
| F209-R | SAN GABRIEL RIVER below Cogswell Dam | 508 C5 | Yes | 41.0 | 12/08/1933 |
| G44B-R | SAN GABRIEL RIVER above Whittier Narrows Dam | 637 A7 | Yes | 442.0 | 01/06/1948 |
| U8-R | SAN GABRIEL RIVER below Morris Dam | 569 B2 | Yes | 212.4 | 05/18/1994 |
| F251-R | SAN GABRIEL RIVER - West Fork at toe of Cogswell Dam | 508 C5 | Yes | 39.2 | 04/26/1935 |
| F312B-R | SAN JOSE CHANNEL above Workman Mill Road | 637 G6 | Yes | 83.4 | 04/23/1992 |
| F119C-R | SANTA ANITA CREEK Below Santa Anita Dam | 537 E6 | Yes | 10.8 | 01/13/1964 |
| F260C-R | SANTA ANITA WASH below Foothill Blvd. | 567 D4 | Yes | 17.2 | 12/11/1959 |
| F193B-R | SANTA ANITA WASH at Longden Avenue | 597 F2 | Yes | 18.8 | 01/05/1960 |
| F92C-R | SANTA CLARA RIVER at Old Road Bridge | 4450 C2 | Yes | 410.4 | 09/01/1981 |
| F93C-R | SANTA CLARA RIVER at Capra Road Railroad Crossing | 4462 J7 | No | 157.0 | 02/08/2002 |
| F280-R | SANTA FE DIVERSION CHANNEL below Santa Fe Dam | 598 B2 | Yes | Controlled | 10/01/1942 |
| F125-R | SANTIAGO CANYON CREEK above Little Rock Creek | 4467 D2 | No | 11.2 | 09/29/1953 |
| F278-R | SAWPIT CREEK below Sawpit Dam | 537 H7 | Yes | 3.3 | 02/06/1942 |
| F194B-R | SAWPIT WASH below Live Oak Avenue | 597 G2 | Yes | 16.1 | 12/05/1960 |
| F32-R | THOMPSON CREEK below Thompson Creek Dam | 571 E4 | Yes | 3.7 | 10/01/1944 |
| F54C-R | TOPANGA CREEK above mouth of canyon | 630 C3 | No | 18.0 | 01/01/1930 |
| F252-R | VERDUGO WASH at Estelle Avenue | 564 C3 | Yes | 26.8 | 12/02/1935 |
| F304-R | WALNUT CREEK above Puente Avenue | 638 B1 | Yes | 57.6 | 10/14/1952 |
| F40-R | WALNUT CREEK below Puddingstone Dam | 600 B4 | Yes | 33.2 | 12/28/2027 |

# RUNOFF

## STREAM GAGING STATION INFORMATION

*(See Appendix B)*

## DAILY DISCHARGE

*(See Appendix C)*

## STREAM GAGING STATION PEAK FLOW

*(See Appendix D)*

# RUNOFF

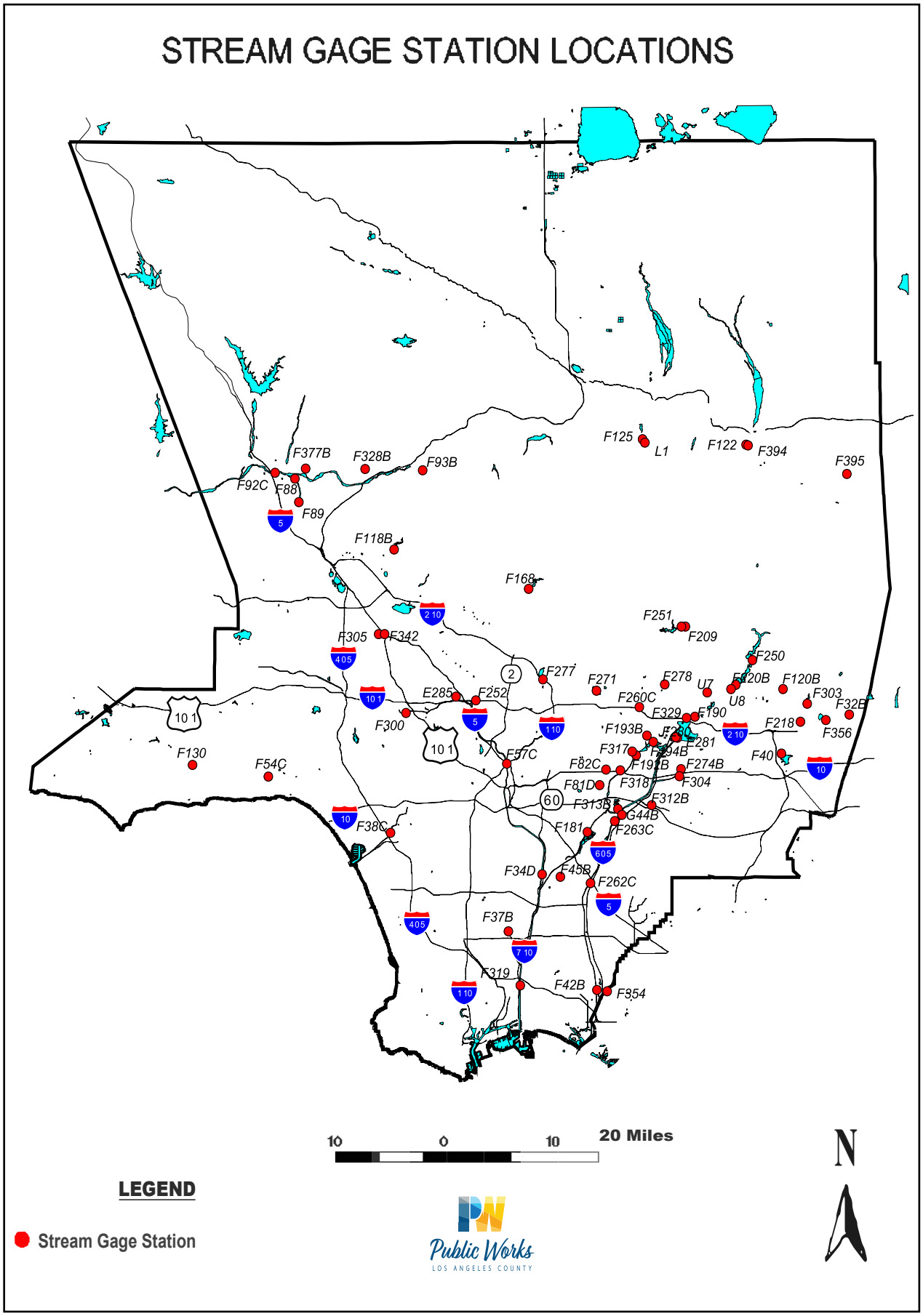
STREAM GAGE STATION LOCATIONS
F125
L1
F122
F394
F395
F377B
F328B
F93B
F92C
F88
F89
F118B
F168
F251
F209
F250
F305
F342
F277
F271
F278
U7
F120B
F120B
F303
F32B
F260C
F329
F190
U8
E285
F252
F300
F193B
F218
F356
F281
F317
F194B
F130
F54C
F57C
F82C
F191B
F274B
F40
F81D
F318
F304
F313B
F312B
G44B
F38C
F181
F263C
F34D
F45B
F262C
F37B
F319
F42B
F354
10 1
2
5
210
405
101
110
605
710
60
10
20 Miles
N
LEGEND
Stream Gage Station
Public Works
LOS ANGELES COUNTY

# RESERVOIRS

## RESERVOIRS

Following the damaging flood of 1914 and creation of the Los Angeles County Flood Control District in 1915, a program of flood control and water conservation was initiated by the District. Part of this program included the construction of 14 dams which were completed between 1920 and 1939. These dams continue to be operated and maintained by Public Works to control flood waters during storm periods. Public Works makes post storm releases, when feasible, in amounts that can be conserved in downstream spreading grounds and by channel percolation. In addition, five Corps of Engineers' dams - Lopez, Hansen, Santa Fe, Sepulveda, and Whittier Narrows Dams, are operated by the Corps in conjunction with Public Works' dams to achieve flood control and/or water conservation.

**RECORDS:**

Public Works' 14 dams and reservoirs' locations are shown on the map. Data on the yearly reservoir operation summaries for each reservoir are provided by selecting from the Yearly Summary on the left. Data for these facilities can be obtained by contacting the custodian of hydrologic records.

**County Of Los Angeles Public Works**
**Stormwater Engineering Division**
**P.O. Box 1460**
**Alhambra, CA 91802-1460**
**(626) 458-6120**

# RESERVOIRS

## YEARLY RESERVOIR OPERATION SUMMARY

*(See Appendix E)*

| Location | Appendix E |
|---|---|
| Big Dalton Dam | **Appendix E 01** |
| Big Tujunga Dam | **Appendix E 02** |
| Cogswell Dam | **Appendix E 03** |
| Devil's Gate Dam | **Appendix E 04** |
| Eaton Wash Dam | **Appendix E 05** |
| Live Oak Dam | **Appendix E 06** |
| Morris Dam | **Appendix E 07** |
| Pacoima Dam | **Appendix E 08** |
| Puddingstone Dam | **Appendix E 09** |
| Puddingstone Diversion | **Appendix E 10** |
| San Dimas Dam | **Appendix E 11** |
| San Gabriel Dam | **Appendix E 12** |
| Santa Anita Dam | **Appendix E 13** |
| Thompson Creek Dam | **Appendix E 14** |

# RESERVOIRS

## Reservoir Information

| DPW Dams and Reservoirs | Current Uses | Construction Completed | Drainage Area (sq.mi) | Original Capacity (acre-ft) | Spillway Elev. (ft) | Location |
|---|---|---|---|---|---|---|
| Big Dalton Dam | Flood control and water conservation | August 1929 | 4.5 | 1,053 | 1,706 | 4 miles northeast of Glendora |
| Big Tujunga Dam | Flood control and water conservation | July 1931 | 82.3 | 6,240 | 2,290 | 10 miles northeast of Sunland |
| Cogswell Dam | Flood control and water conservation | April 1934 | 39.2 | 12,298 | 2,385 | 22 miles north of Azusa |
| Devil's Gate Dam | Flood control and water conservation | June 1920 | 31.9 | 4601 | 1,040.5 | Arroyo Seco, northwest of Pasadena |
| Eaton Wash Dam | Flood control and water conservation | February 1937 | 12.4 | 956 | 887.5 | Eaton Wash, northeast of Pasadena |
| Live Oak Dam | Flood control and water conservation | November 1922 | 2.5 | 250 | 1,496.4 | 2.5 miles northeast of La Verne |
| Morris Dam | Flood control and water conservation | May 1935 | 211.4 | 32,300 | 1152 | 5 miles north of Azusa |
| Pacoima Dam | Flood control and water conservation | February 1929 | 28.2 | 6,060 | 1,950 | 4 miles northeast of San Fernando |
| Puddingstone Dam | Flood control, water conservation, and recreation | January 1928 | 33.1 | 17,938 | 970 | 1 mile south of San Dimas |
| Puddingstone Diversion | Flood control, water conservation, and diversion of flow | July 1928 | 19.9 | 148 | 1,152.5 | 2 miles northeast of San Dimas |
| San Dimas Dam | Flood control and water conservation | September 1922 | 16.2 | 1,496 | 1,462 | 3 miles northeast of San Dimas |
| San Gabriel Dam | Flood control and water conservation | July 1939 | 202.7 | 53,344 | 1,453 | 7.5 miles north of Azusa |
| Santa Anita Dam | Flood control and water conservation | March 1927 | 10.8 | 1,376 | 1,305 | 2.5 miles north of Arcadia |
| Thompson Creek Dam | Flood control and water conservation | March 1928 | 3.5 | 812 | 1,634.1 | 3 miles north of Claremont |

Note: All dams listed above are under the jurisdiction of the Division of Safety of Dams (DSOD), Under the California Department of Water Resources.

# RESERVOIRS - INFORMATION

## BIG DALTON DAM AND RESERVOIR

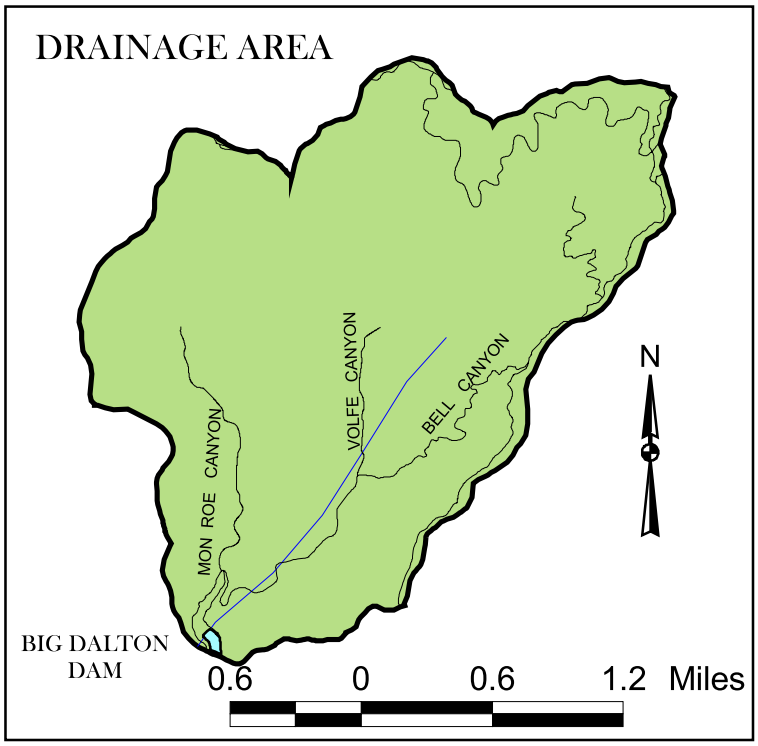


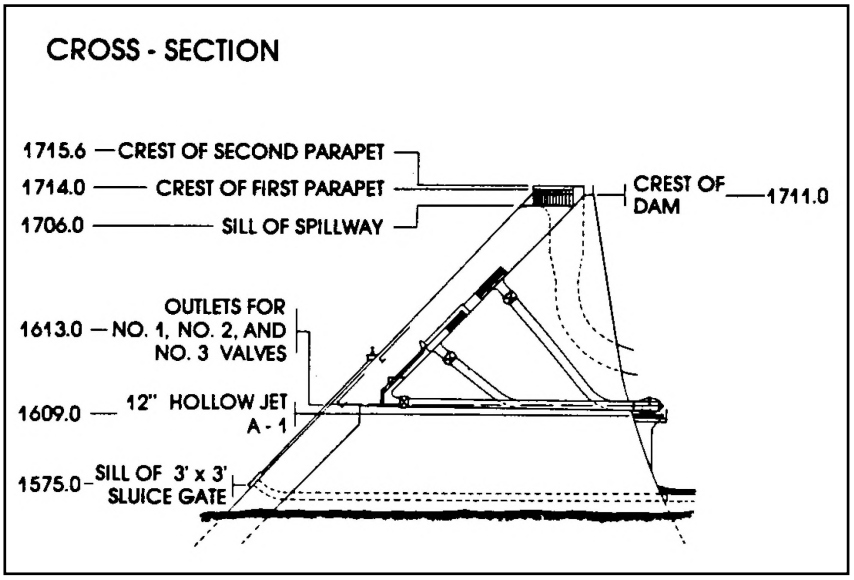


**PURPOSE** - Flood control and water conservation.
**DATE CONSTRUCTED** - Started December 1927. Completed August 1929.

**LOCATION** - Big Dalton Canyon, 4.0 miles northeast of Glendora.
**DRAINAGE AREA** - 4.5 square miles.
**CAPACITY (As of latest survey date)** - 1,075.3 acre - feet.
**SURVEY DATE** - August 2014.
**SPILLWAY ELEVATIONS:**
Main Spillway: 1,706 feet.
Crest Spillway: 1,711 feet.

# RESERVOIRS - INFORMATION

## BIG TUJUNGA DAM AND RESERVOIR

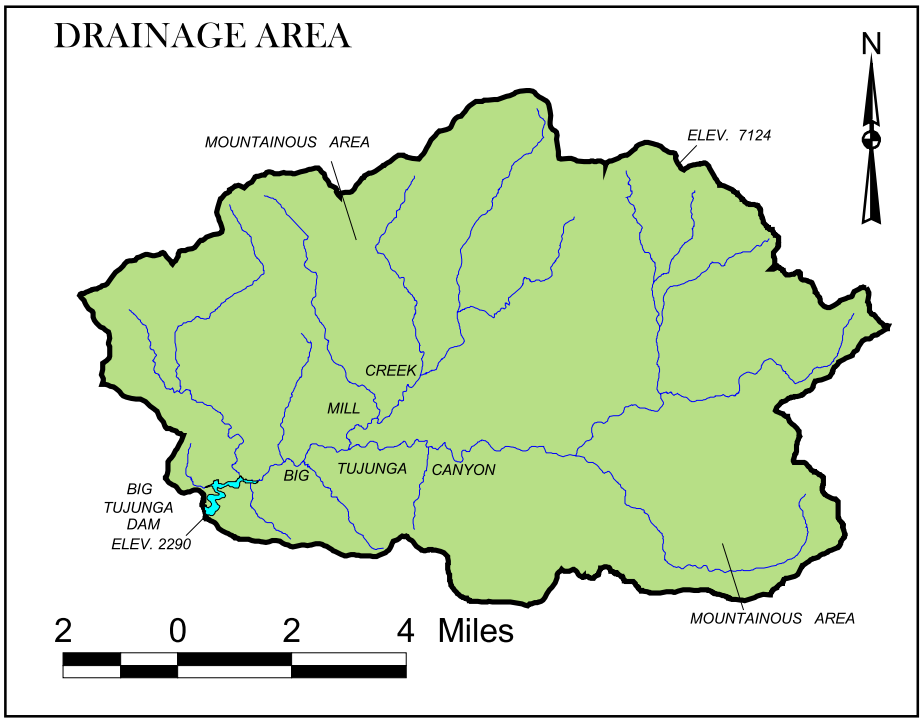


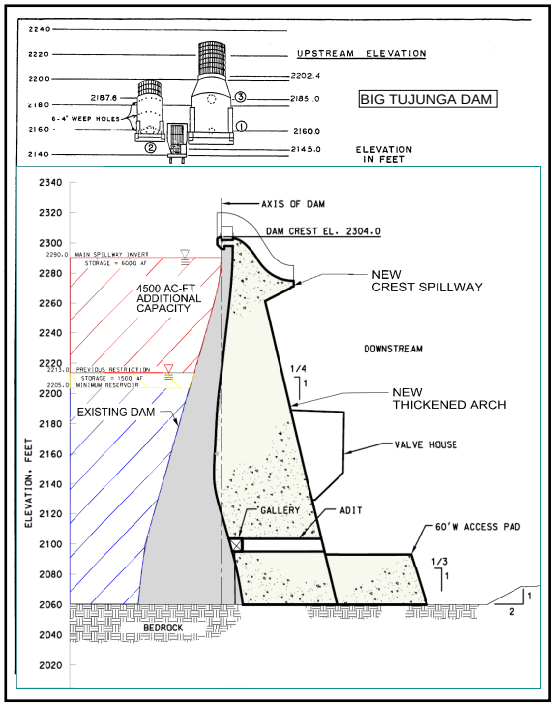


**PURPOSE** - Flood control and water conservation.
**DATE CONSTRUCTED** - Started January 1930. Completed July 1931.
**LOCATION** - Big Tujunga Canyon, 10.0 miles northeast of Sunland.
**DRAINAGE AREA** - 82.3 square miles.
**CAPACITY (As of latest survey date)** - 5,028.6 acre - feet.
**SURVEY DATE** - December 2019.
**SPILLWAY ELEVATIONS:**
Main Spillway: 2,290 feet.
Crest Spillway: 2,304 feet

# RESERVOIRS - INFORMATION

## COGSWELL DAM AND RESERVOIR

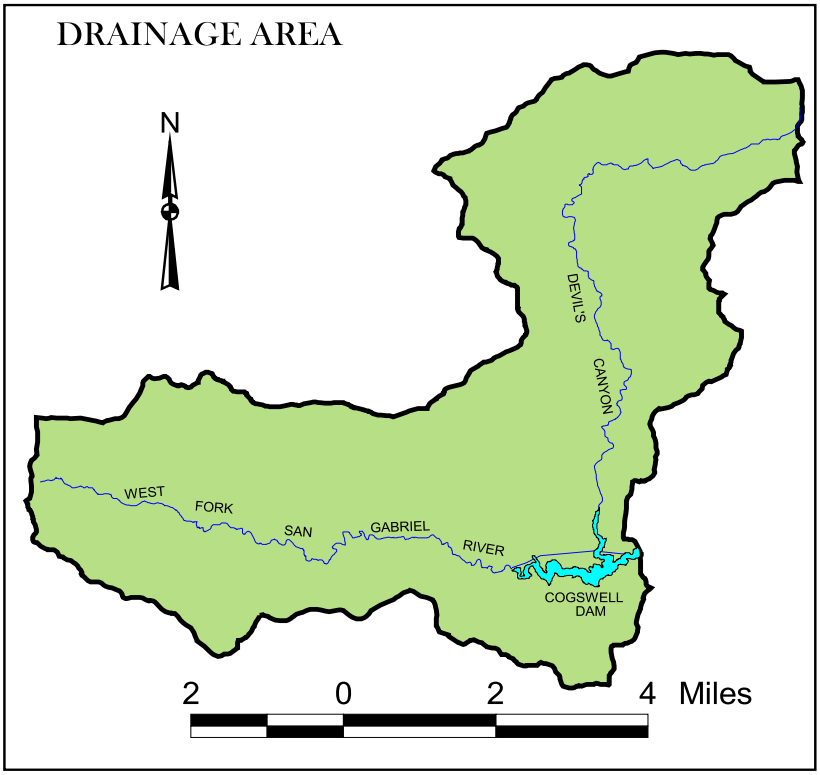


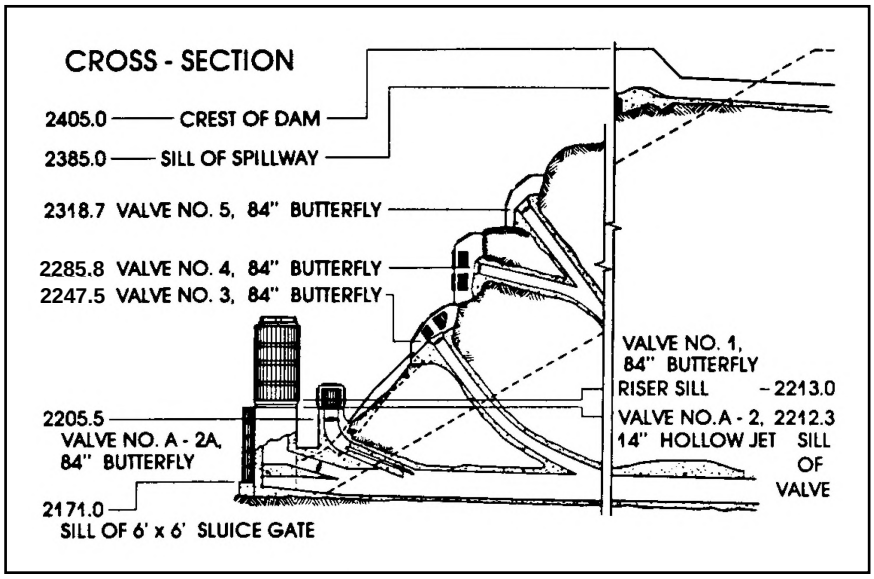


**PURPOSE** - Flood control and water conservation.
**DATE CONSTRUCTED** - Started March 1932. Completed April 1934.
**LOCATION** - 22.0 miles northeast of Azusa.
**DRAINAGE AREA** - 39.2 square miles.
**CAPACITY (As of latest survey date)** - 10,478 acre - feet.
**SURVEY DATE** - July 2017.
**SPILLWAY ELEVATION** - 2,385 feet.

# RESERVOIRS - INFORMATION

## DEVIL'S GATE DAM AND RESERVOIR

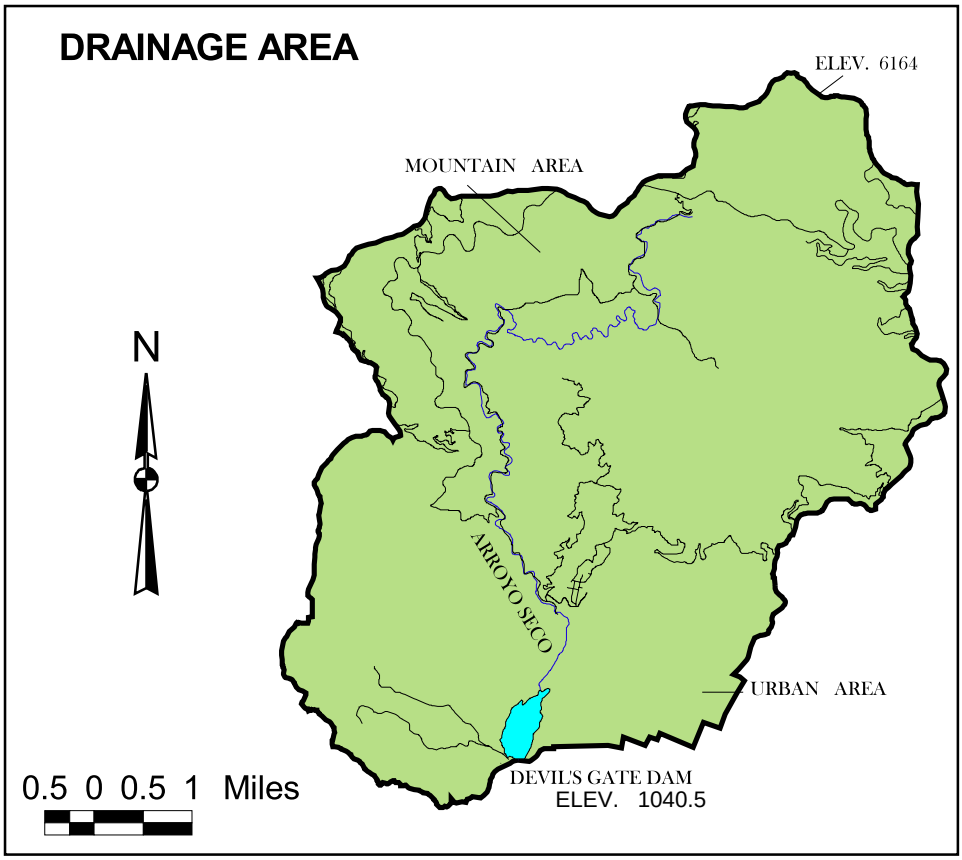


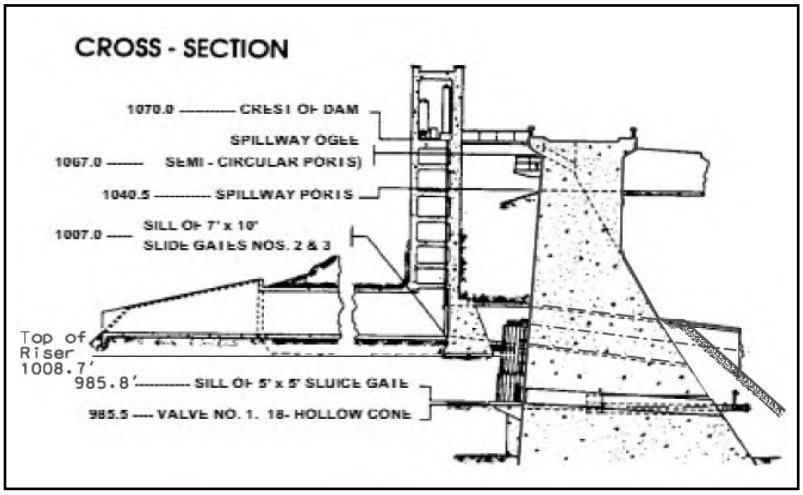


**PURPOSE** - Flood control and water conservation.
**DATE CONSTRUCTED** - Started May 1919. Completed June 1920.
**LOCATION** - On Arroyo Seco, northwest of Pasadena.
**DRAINAGE AREA** - 31.9 square miles.
**CAPACITY (As of latest survey date)** - 1,318.8 acre - feet.
**SURVEY DATE** - April 2020.
**SPILLWAY ELEVATIONS:**
Spillway Ports: 1,040.5 feet.
Ogee Spillway: 1,067 feet.

# RESERVOIRS - INFORMATION

## EATON WASH DAM AND RESERVOIR

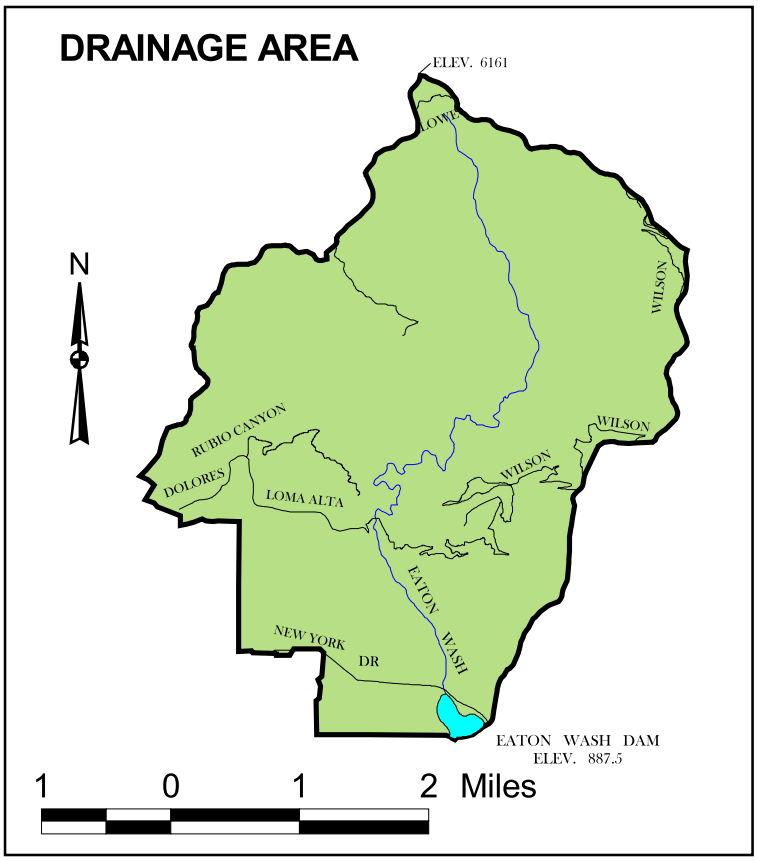


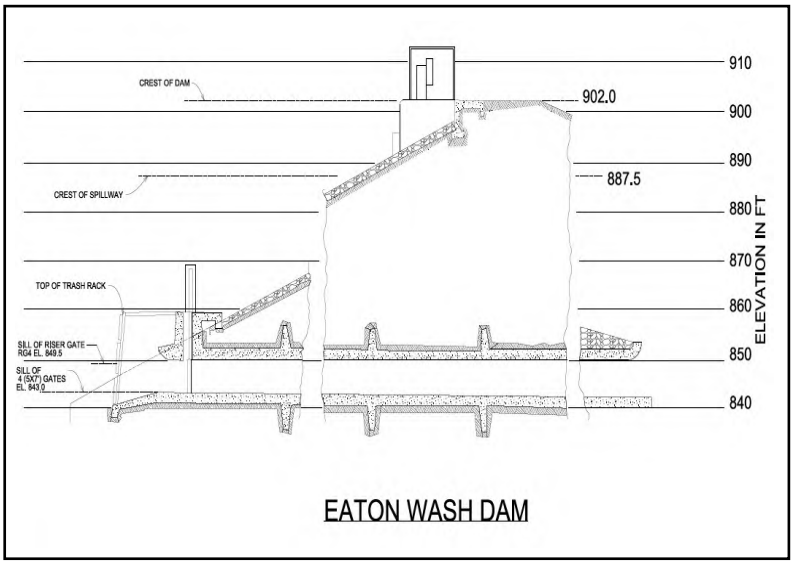


**PURPOSE** - Flood control and water conservation.
**DATE CONSTRUCTED** - Started January 1936, completed February 1937.
**LOCATION** - Eaton Wash, northeast of Pasadena.
**DRAINAGE AREA** - 12.4 square miles.
**CAPACITY (As of latest survey date)** - 653 acre - feet.
**SURVEY DATE** - August 2015.
**SPILLWAY ELEVATION** - 887.5 feet

# RESERVOIRS - INFORMATION

## LIVE OAK DAM AND RESERVOIR

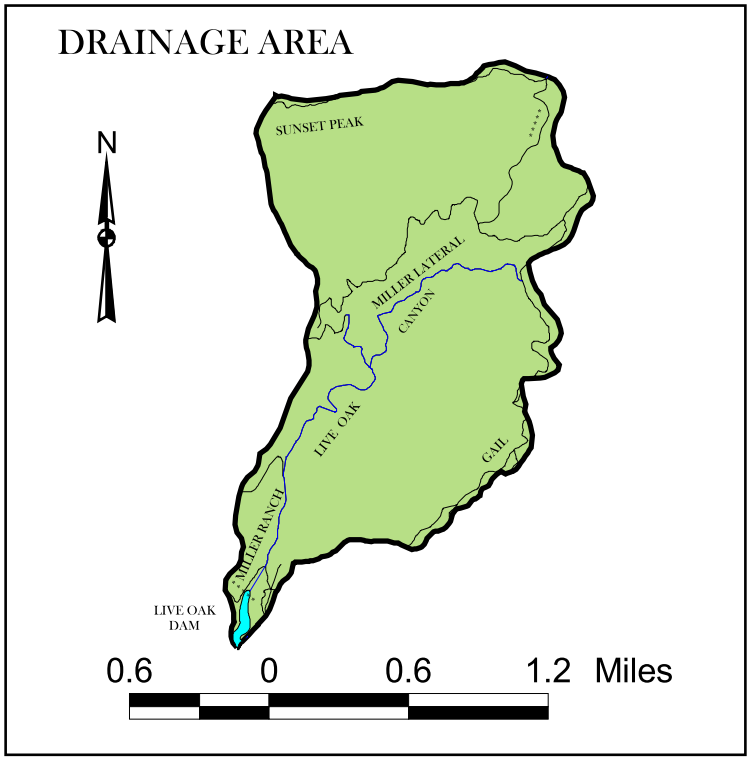


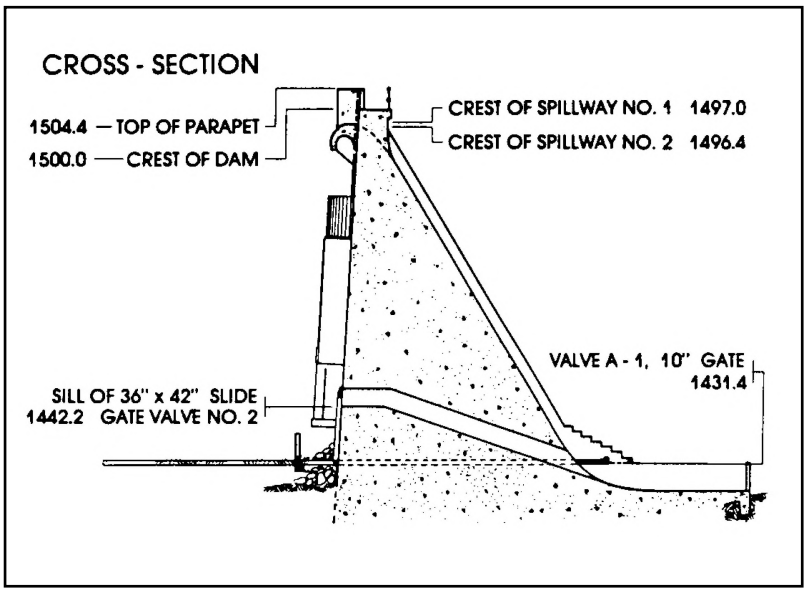


**PURPOSE** - Flood control and water conservation.
**DATE CONSTRUCTED** - Started August 1921, completed November 1922.
**LOCATION** - 2.5 miles northeast of La Verne.
**DRAINAGE AREA** - 2.3 square miles.
**CAPACITY (As of latest survey date)** - 235.8 acre - feet.
**SURVEY DATE** - August 2015.
**SPILLWAY ELEVATIONS:**
Spillway No. 2: 1,496.4 feet.
Spillway No. 1: 1,497 feet

# RESERVOIRS - INFORMATION

## MORRIS DAM
## AND RESERVOIR

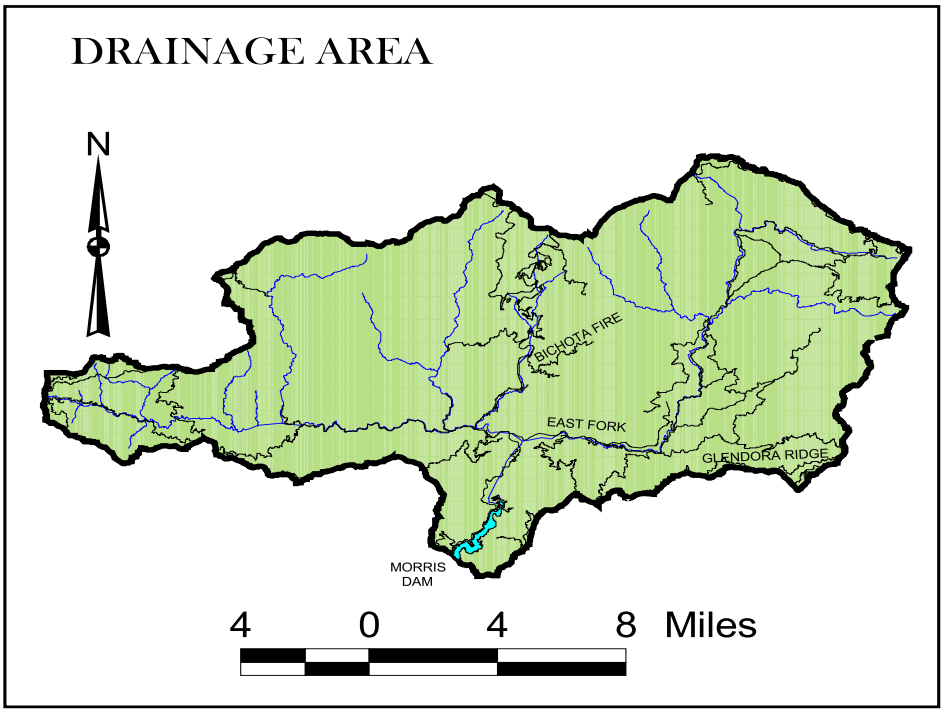


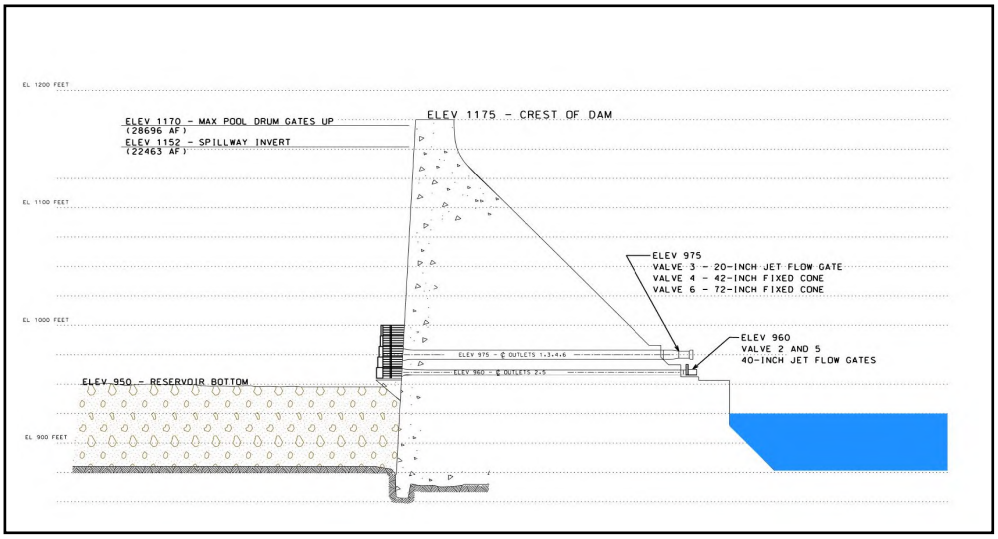


**PURPOSE** - Flood control and water conservation.
**DATE CONSTRUCTED** - Started April 1932. Completed 1935.
**LOCATION** - San Gabriel Canyon 5 miles north of Azusa.
**FLOOD ATTENUATION** - 6,600 acre - feet.
**DRAINAGE AREA** - 8.7 square miles ( uncontrolled )
202.7 square miles controlled by San Gabriel and Cogswell Dam.
Total 211.4 square miles.
**CAPACITY (As of latest survey date)** - 22,406 acre - feet.
**SURVEY DATE** - July 2017.
**SPILLWAY ELEVATIONS:**
Drum Gates Down: 1,152 feet.
Drum Gates Up: 1,170 feet

# RESERVOIRS - INFORMATION

## PACOIMA DAM
## AND RESERVOIR

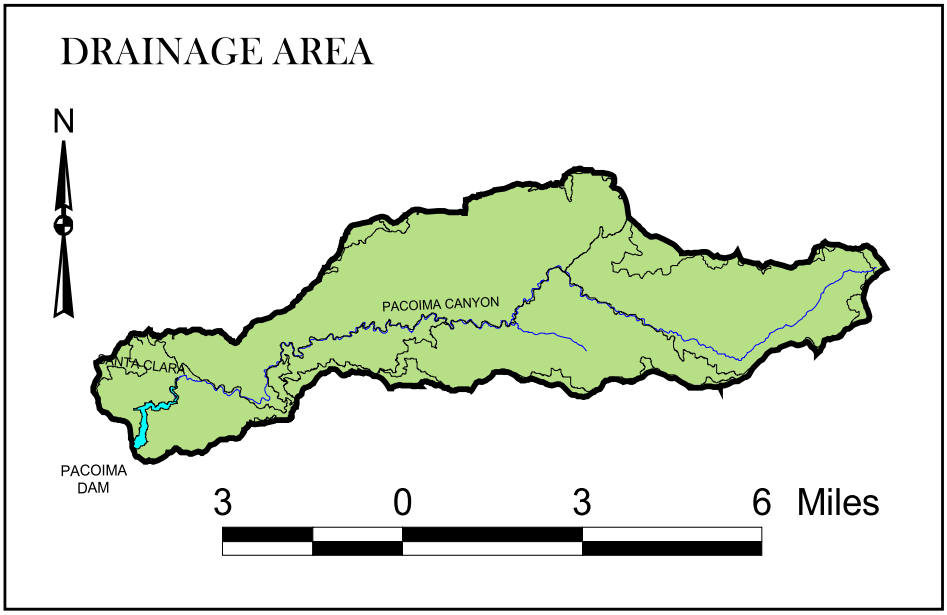


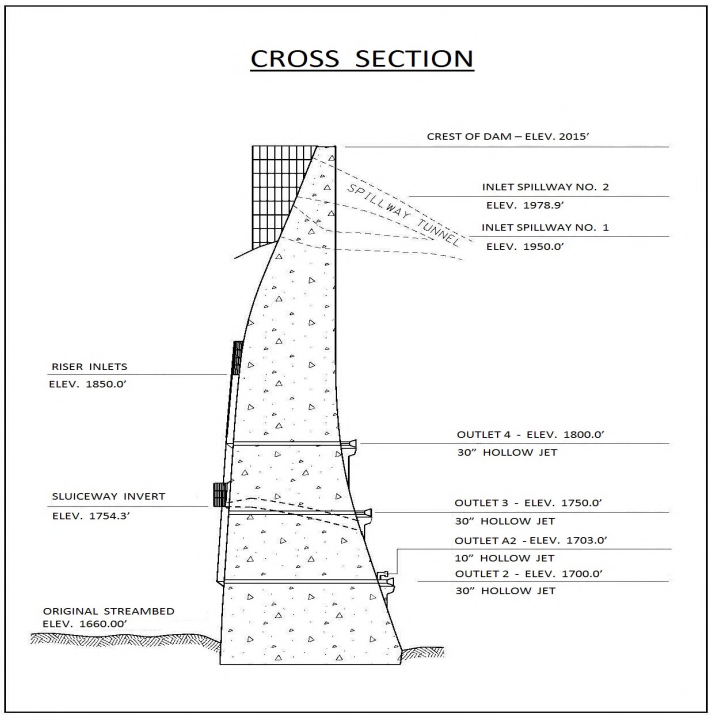


**PURPOSE** - Flood control and water conservation.
**DATE CONSTRUCTED** - Started March 1925. Completed February 1929.
**LOCATION** - Pacoima Canyon, 4.0 miles northeast of San Fernando.
**DRAINAGE AREA** - 28.2 square miles.
**CAPACITY (As of latest survey date)** - 2,644.4 acre - feet.
**SURVEY DATE** - November 2019.
**SPILLWAY ELEVATIONS:**
Spillway No. 1: 1,950 feet.
Spillway No. 2: 1,978.9 feet

# RESERVOIRS - INFORMATION

## PUDDINGSTONE DAM AND RESERVOIR

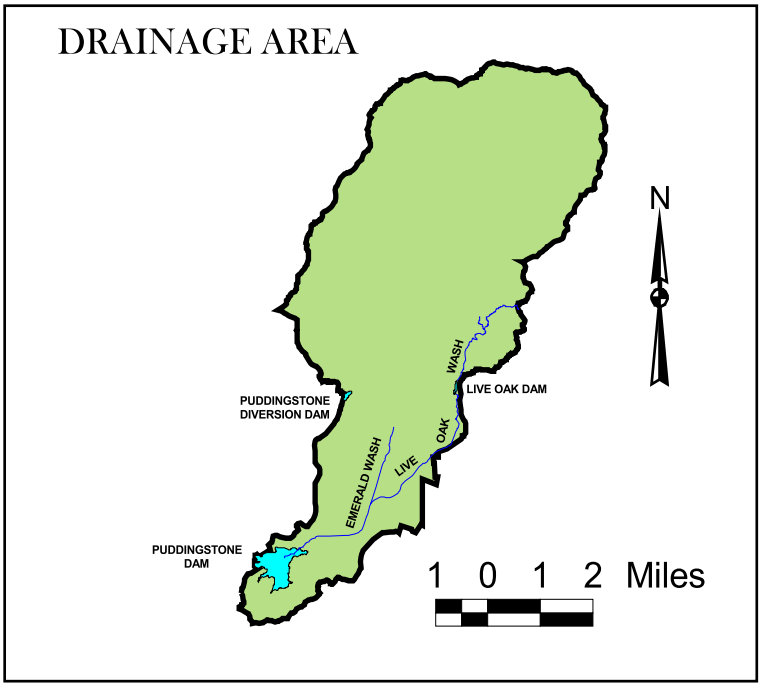


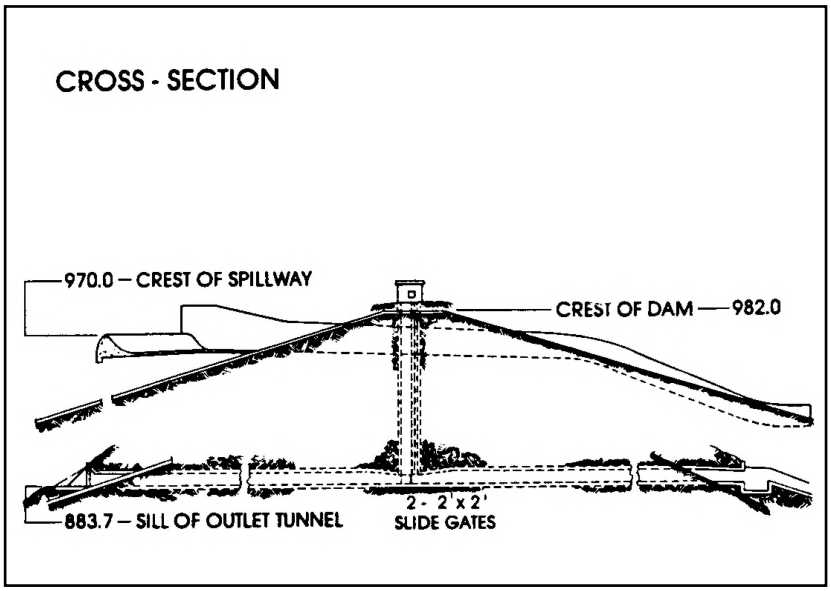


**PURPOSE** - Flood control,water conservation,and recreation.
**DATE CONSTRUCTED** - Started February 1925. Completed January 1928.
**LOCATION** - 1.0 miles south of San Dimas.
**DRAINAGE AREA** - 11.0 square miles ( uncontrolled )
22.1 square miles ( controlled )
Total 33.1 square miles.
**CAPACITY (As of latest survey date)** - 16,353.6 acre - feet.
**SURVEY DATE** - January 1986.
**SPILLWAY ELEVATION** - 970 feet.

# RESERVOIRS - INFORMATION

## PUDDINGSTONE DIVERSION DAM AND RESERVOIR

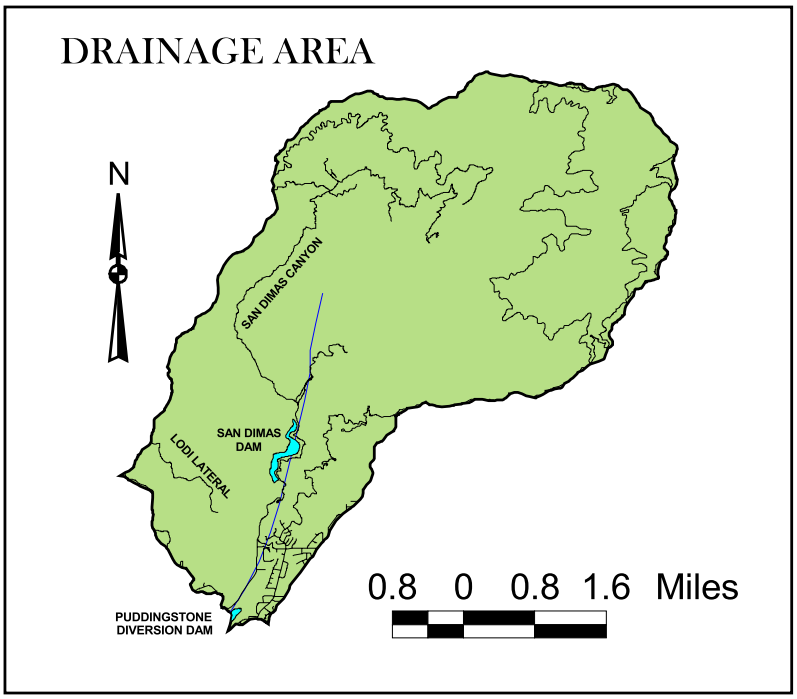


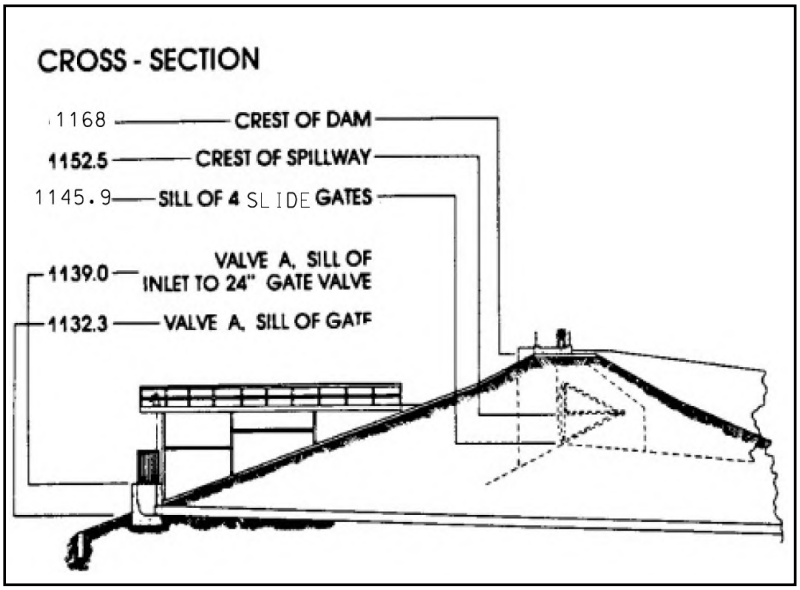


**PURPOSE** - Flood control, diversion of flow, and water conservation.
**DATE CONSTRUCTED** - Started September 1927. Completed July 1928.
**LOCATION** - 2.0 miles northeast of San Dimas.
**DRAINAGE AREA** - 3.7 square miles ( uncontrolled )
16.2 square miles ( controlled )
Total 19.9 square miles.
**CAPACITY (As of latest survey date)** - 205 acre - feet.
**SURVEY DATE** - August 2015.
**SPILLWAY ELEVATION** - 1,152.5 feet.

# RESERVOIRS - INFORMATION

## SAN DIMAS DAM AND RESERVOIR

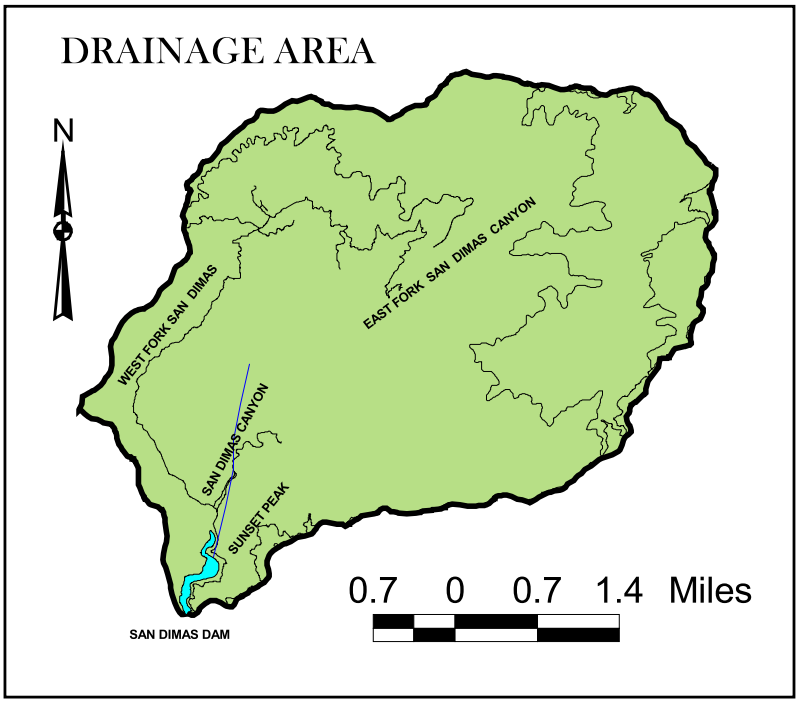


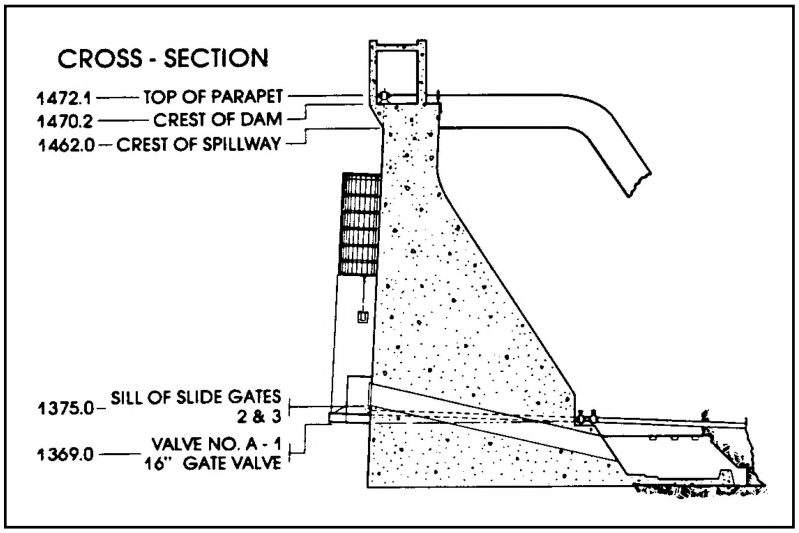


**PURPOSE** - Flood control and water conservation.
**DATE CONSTRUCTED** - Started November 1920. Completed September 1922.
**LOCATION** - 3.0 miles northeast of San Dimas.
**DRAINAGE AREA** - 16.2 square miles.
**CAPACITY (As of latest survey date)** - 1,503 acre - feet.
**SURVEY DATE** - August 2017.
**SPILLWAY ELEVATIONS:**
Main Spillway: 1,462 feet
Crest Spillway: 1,470.2 feet

# RESERVOIRS - INFORMATION

## SAN GABRIEL DAM AND RESERVOIR

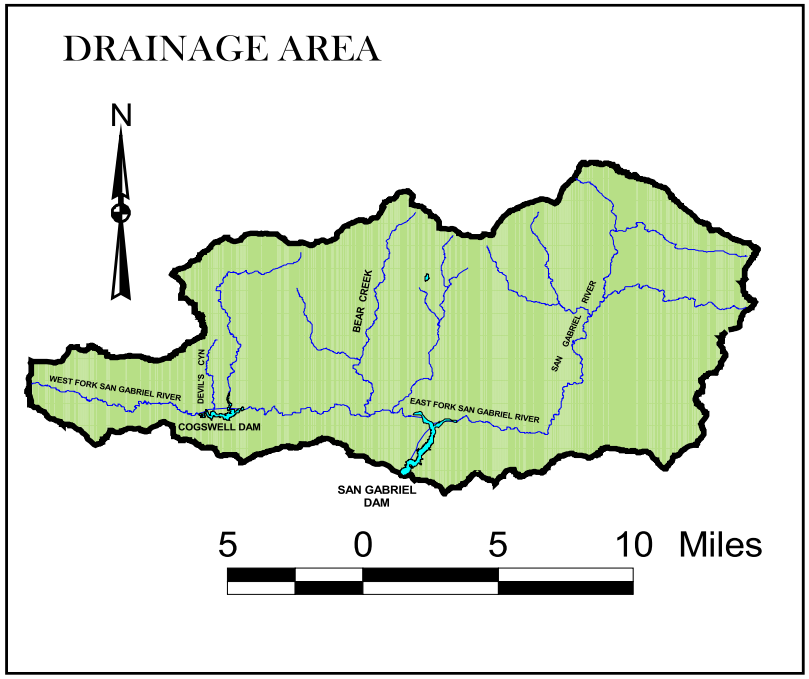


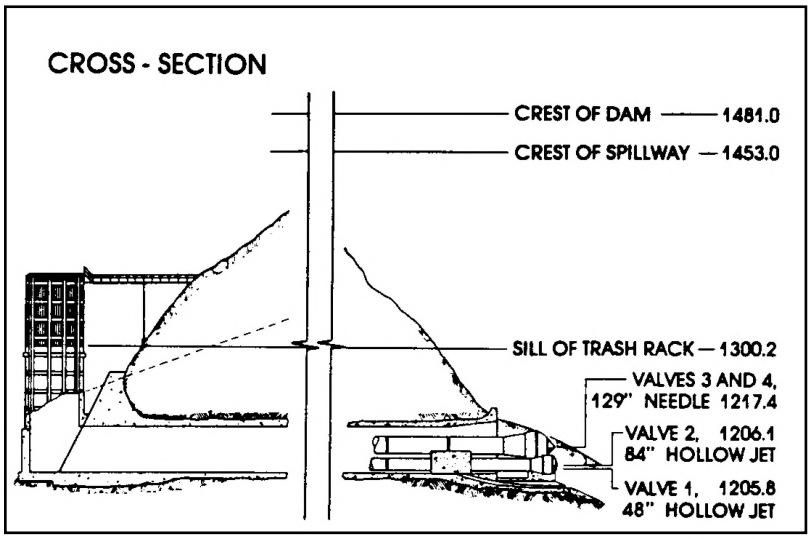


**PURPOSE** - Flood control and water conservation.
**DATE CONSTRUCTED** - Started December 1932. Completed July 1939.
**LOCATION** - San Gabriel Canyon, 7.5 miles north of Azusa.
**DRAINAGE AREA** - 163.5 square miles ( uncontrolled )
39.2 square miles ( controlled )
Total 202.7 square miles.
(includes Cogswell drainage)
**CAPACITY (As of latest survey date)** - 44,044 acre - feet.
**SURVEY DATE** - December 2015.
**SPILLWAY ELEVATION** - 1,453 feet.

# RESERVOIRS - INFORMATION

## SANTA ANITA DAM AND RESERVOIR

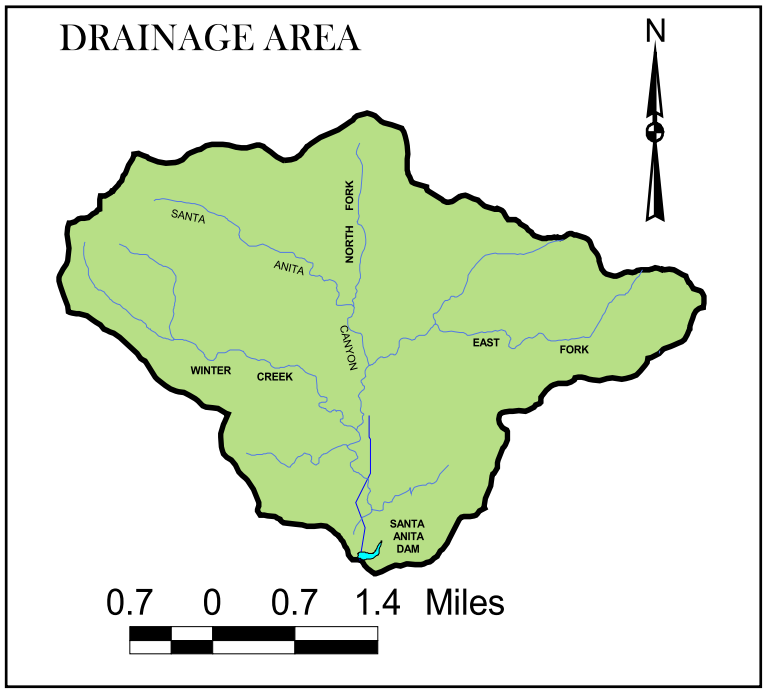


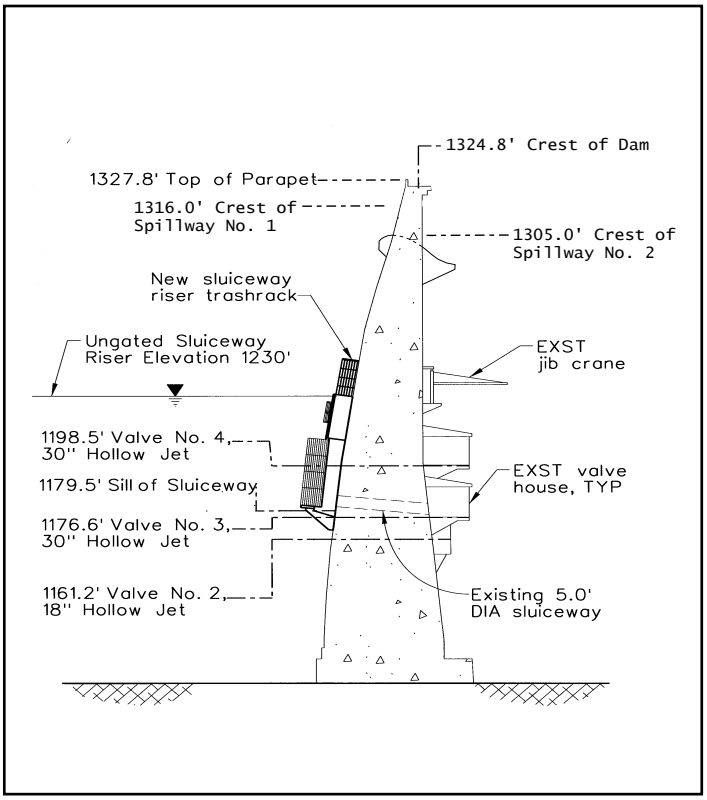


**PURPOSE** - Flood control and water conservation.
**DATE CONSTRUCTED** - Started October 1924. Completed March 1927.
**LOCATION** - 2.5 miles north of Arcadia.
**DRAINAGE AREA** - 10.8 square miles.
**CAPACITY (As of latest survey date)** - At crest: 1,111 acre - feet.
- At spillway No. 2: 824 acre - feet
- At 1230' restriction: 168 acre - feet

**SURVEY DATE** - May 2017.
**SPILLWAY ELEVATIONS:**
Spillway No. 2: 1,305 feet.
Spillway No. 1: 1,316 feet

# RESERVOIRS - INFORMATION

## THOMPSON CREEK DAM AND RESERVOIR

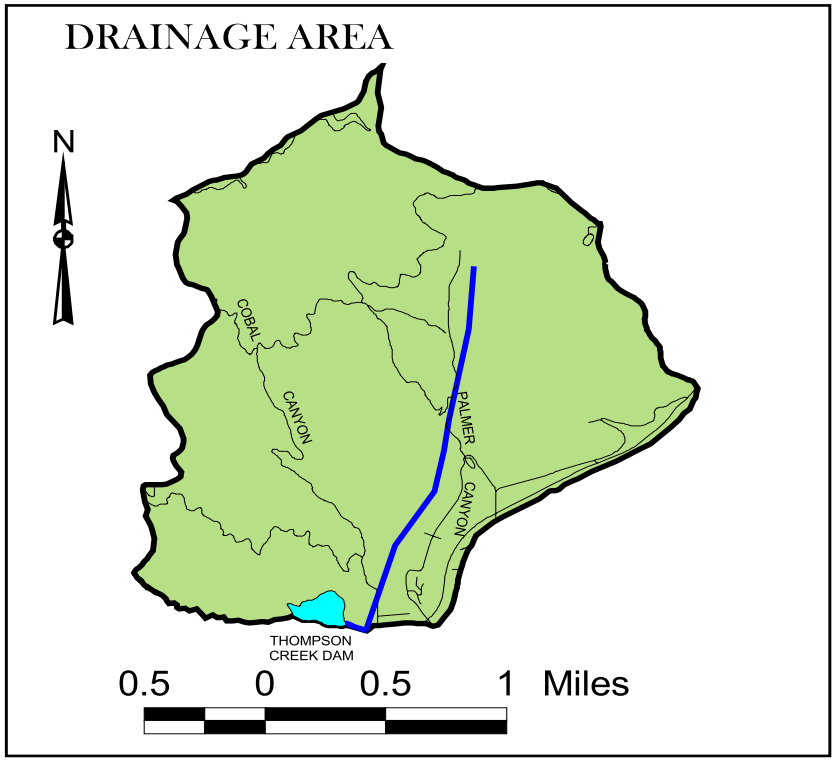


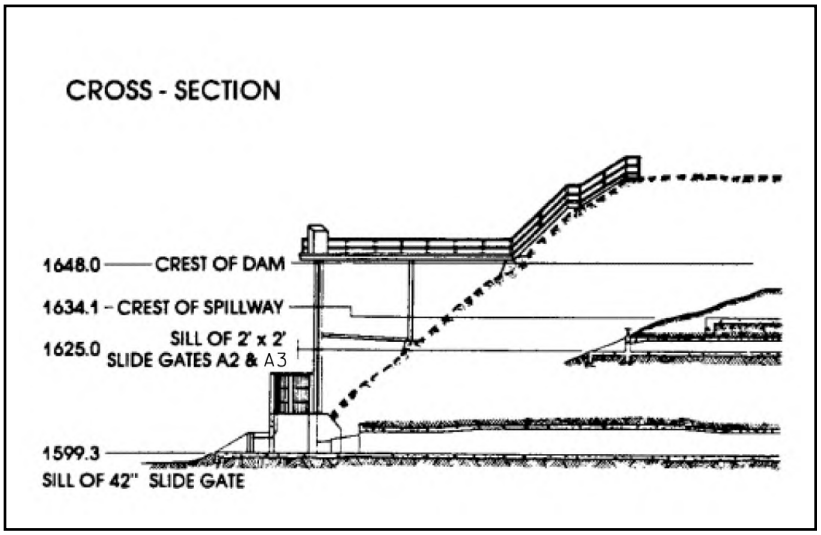


**PURPOSE** - Flood control and water conservation.
**DATE CONSTRUCTED** - Started September 1925. Completed March 1928.
**LOCATION** - 3.0 miles north of Claremont.
**DRAINAGE AREA** - 3.5 square miles.
**CAPACITY (As of latest survey date)** - 515 acre - feet.
**SURVEY DATE** - June 2004.
**SPILLWAY ELEVATION** - 1,634.1 feet.

# RESERVOIRS

## Dam Locations

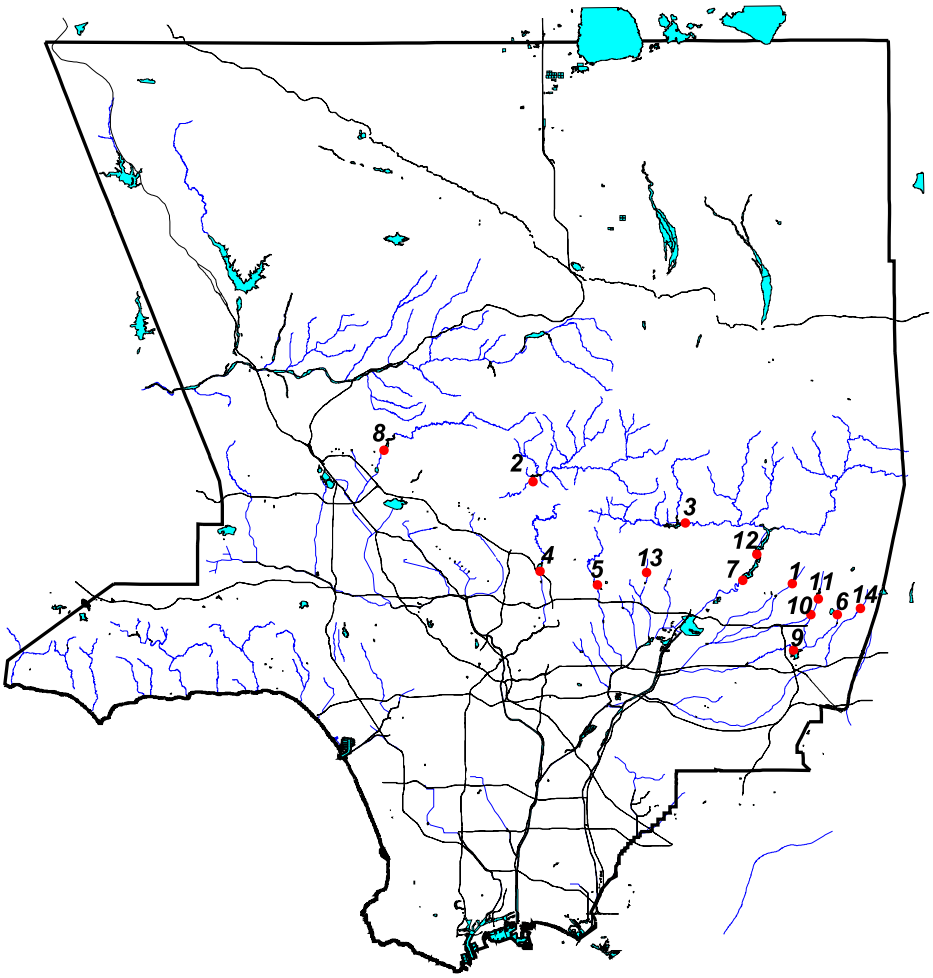


1. Big Dalton Dam
2. Big Tujunga Dam
3. Cogswell Dam
4. Devil's Gate Dam
5. Eaton Wash Dam
6. Live Oak Dam
7. Morris Dam
8. Pacoima Dam
9. Puddingstone Dam
10. Puddingstone Diversion Dam
11. San Dimas Dam
12. San Gabriel Dam
13. Santa Anita Dam
14. Thompson Creek Dam

# EROSION CONTROL

## EROSION CONTROL

Each year eroded material in various forms (debris consisting of rock, sand, trees, etc.) flows out of the mountain watersheds of the County of Los Angeles. In an effort to control this potentially disruptive force, Public Works maintains a series of debris basins in canyon mouths and upstream stabilization structures in selected watersheds.

### DEBRIS BASINS:

The purpose of a debris basin is to entrap the sediment flows emanating from the canyon and let the relatively desilted water pass into the downstream flood control channels.

Public Works maintained over 100 debris basins during the reporting period. Their locations are shown in a PDF map *(1.67MB)*.

This section contains a partial list of the debris basins maintained by Public Works. Data for sediment inflow at individual debris basins and unpublished information may be obtained by contacting:

**County of Los Angeles Public Works**
**Stormwater Engineering Division**
**Hydrology Section**
**P.O. Box 1460**
**Alhambra, CA 91802-1460**
**(626) 458-6120**

### STABILIZATION STRUCTURES:

Public Works constructed stabilization structures to control erosion in natural canyons. These structures serve to prevent down cutting by stabilizing alluvium deposits. In addition, they store debris generated by the watershed and serve to stabilize side banks, reducing side slope sloughing and bank erosion.

Public Works maintained 217 stabilization structures in 47 major watersheds during the reporting period. The Department has not constructed any stabilization structures since the 1973-74 water year.

### EMERGENCY STRUCTURES:

Public Works constructed emergency structures (rail and timber) to entrap the debris from burned watersheds. The structures serve to protect improvements (road, channel, residence, etc.) located downstream of the watersheds.

Watersheds within the County of Los Angeles periodically burn. Maps of areas burned during the reporting period can be obtained by contacting the Stormwater Engineering Division/Hydrology Section.

## EROSION CONTROL

# LOCATION MAP

***(See Appendix F)***

# EROSION CONTROL

## DEBRIS BASIN - DESIGN DATA:

Including 2019-2020 Storm Season
(Sedimentation Management Unit)

| Debris Basin | First Debris Season | Uncontrolled Drainage Area Above Basin | Bottom Elev. at Max Cap. | Elevation Port Invert | Elevation Spillway Crest | Width Spillway | Elevation Crest of Dam | Maximum Debris Capacity |
|---|---|---|---|---|---|---|---|---|
| | | (Sq. Mi.) | (Ft.) | (Ft.) | (Ft.) | (Ft.) | (AMSL) | (Cu. Yds.) |
| Aliso | 1970-71 | 2.77 | 1,108 | 1,108 | 1,120 | 70.0 | 1,134 | 42,000 (8) |
| Arbor Dell | 1971-72 | 0.11 | 899 | 898 | 916 | 22.9 | 920 | 15,800 |
| Auburn | 1954-55 | 0.19 | 1,260 | 1,261 | 1,278 | 30.0 | 1,286 | 39,000 |
| Bailey | 1945-46 | 0.60 | 1,123 | 1,123 | 1,155 | 30.0 | 1,166 | 129,000 |
| Beatty | 1970-71 | 0.27 | 800 | 800 | 807 | 32.0 | 816 | 43,000 |
| Big Dalton | 1959-60 | 2.94 | 1,102 | 1,102 (3) | 1,132 | 116.0 | 1,149 | 518,000 |
| Bigbriar | 1971-72 | 0.02 | 1,898 | 1,896 | 1,910 | 14.0 | 1,911 | 4,800 |
| Blanchard | 1968-69 | 0.47 | 2,026 | 2,026 | 2,054 | 40.0 | 2,065 | 75,000 |
| Blue Gum | 1968-69 | 0.19 | 2,020 | 2,020 | 2,042 | 25.0 | 2,053 | 40,000 |
| Brace | 1971-72 | 0.29 | 1,190 | 1,190 | 1,196 | 20.0 | 1,205 | 30,000 |
| Bracemar | 1971-72 | 0.01 | 1,140 | 1,140 | 1,146 | 8.0 | 1,148 | 700 (14) |
| Bradbury | 1954-55 | 0.68 | 912 | 913 | 920 | 58.0 | 928 | 90,000 |
| Brand | 1935-36 | 1.04 | 860 | 860 | 890 | 60.0 | 903 | 166,000 |
| Buena Vista | 1985-86 | 0.10 | 979 | 979 | 992 | 39.0 | 998 | 22,000 |
| Carriage House | 1970-71 | 0.03 | 1,350 | 1,350 | 1,363 | 15.0 | 1,367 | 6,100 |
| Carter | 1954-55 | 0.12 | 1,224 | 1,223 | 1,248 | 30.0 | 1,255 | 28,000 |
| Cassara | 1976-77 | 0.21 | 1,272 | 1,272 | 1,292 | 66.0 | 1,295 | 37,000 |
| Chamberlain | 1974-75 | 0.04 | 1,085 | 1,084 | 1,098 | 20.0 | 1,101 | 4,700 |
| Chandler | 1995-96 | 0.16 | 1,055 | 1,052 | 1,073 | 36.0 | 1,078 | 20,000 (15) |
| Childs | 1963-64 | 0.30 | 1,022 | 1,022 | 1,059 | 23.0 | 1,071 | 50,000 |
| Cloud Creek | 1972-73 | 0.01 | 2,350 | 2,351 | 2,360 | (5) | 2,362 | 5,100 |
| Cloudcroft | 1973-74 | 0.21 | 314 | 315 | 330 | 36.0 | 330 | 35,000 |
| Cooks | 1951-52 | 0.58 | 2,058 | 2,058 | 2,083 | 48.0 | 2,092 | 52,000 |
| Cooks M-1A | 1975-76 | (13) | 2,120 | 0 (10) | 2,142 | (10) | 0 (10) | 34,000 |
| Crescent Glen | 2001-02 | 0.07 | 1,149 | 1,149 | 1,171 | 19.3 | 1,174 | 21,000 |
| Crestview | 1983-84 | 0.03 | 864 | 864 | 886 | 20.0 | 892 | 5,900 (14) |
| Deer | 1954-55 | 0.59 | 1,185 | 1,185 | 1,201 | 56.0 | 1,210 | 57,000 |
| Denivelle | 1976-77 | 0.18 | 1,471 | 1,471 | 1,479 | 46.0 | 1,483 | 7,900 |
| Devonwood | 1981-82 | 0.05 | 1,899 | 1,899 | 1,922 | (16) | 1,928 | 11,000 |
| Dry Canyon-South Fork | 1978-79 | 0.49 | 1,063 | 1,063 | 1,075 | 32.0 | 1,079 | 7,900 |
| Dunsmuir | 1935-36 | 0.84 | 2,228 | 2,228 | 2,257 | 60.0 | 2,272 | 103,000 |
| Eagle | 1936-37 | 0.48 | 1,850 | 1,846 | 1,880 | 60.0 | 1,895 | 63,000 |
| Elmwood | 1964-65 | 0.31 | 912 | 912 | 938 | 22.0 | 952 | 61,000 |
| Emerald-East | 1964-65 | 0.15 | 1,185 | 1,181 | 1,192 | 30.0 | 1,204 | 13,600 |

**FOOTNOTES**

(1) Lowest clear water outlet, not spillway.
(2) Elevation of spillway notch.
(3) Flow line of sluiceway.
(4) Elevation of spillway into outlet channel. Elevation of overflow spillway 1,036.9 feet.
(5) One 30-inch reinforced concrete pipe.
(6) Four 36-inch corrugated metal pipes.
(7) One 36-inch reinforced concrete pipe. (Elevated inlet)
(8) Debris capacity available within right of way limits.
(9) Pit-type basin.
(10) Information unavailable.
(11) Special cleanout required due to limited storage.
(12) Cleanout required when debris reaches or exceeds elevation 1128.9 feet against face of dam.
(13) Values are combined with Cooks debris basin.
(14) Spillway level storage capacity.
(15) Data taken from design drawings.
(16) 7 feet in diameter circular outlet type.
(17) The maximum capacities have been rounded off with regard to appropriate precision consistent with the assumptions used in the development of Hydrology and Sedimentation Manual.
(18) New maximum capacity based on “As-Built” topographic map number 78B-T56.

# EROSION CONTROL

## DEBRIS BASIN - DESIGN DATA:

Including 2019-2020 Storm Season
(Sedimentation Management Unit)

| Debris Basin | First Debris Season | Uncontrolled Drainage Area Above Basin | Bottom Elev. at Max Cap. | Elevation Port Invert | Elevation Spillway Crest | Width Spillway | Elevation Crest of Dam | Maximum Debris Capacity |
|---|---|---|---|---|---|---|---|---|
| | | (Sq. Mi.) | (Ft.) | (Ft.) | (Ft.) | (Ft.) | (AMSL) | (Cu. Yds.) |
| Englewild | 1961-62 | 0.44 | 1,275 | 1,275 | 1,297 | 50.0 | 1,300 | 41,000 |
| Fair Oaks | 1935-36 | 0.20 | 1,544 | 1,544 | 1,562 | (6) | 1,567 | 24,000 |
| Fern | 1935-36 | 0.31 | 1,440 | 1,440 | 1,476 | 25.0 | 1,482 | 43,000 |
| Fieldbrook | 1974-75 | 0.35 | 713 | 713 | 722 | 28.0 | 728 | 11,100 (15) |
| Golf Club Drive | 1970-71 | 0.99 | 881 | 881 | 902 | 36.7 | 915 | 15,000 |
| Gooseberry | 1998-99 | 0.19 | 1,440 | 1,440 | 1,460 | 25.0 | 1,469 | 35,000 |
| Gordon | 1973-74 | 0.18 | 1,076 | 1,075 | 1,096 | 22.0 | 1,105 | 35,600 |
| Gould | 1947-48 | 0.36 | 1,530 | 1,528 | 1,548 | 55.0 | 1,558 | 53,000 |
| Gould (Upper) | 1976-77 | 0.18 | 1,864 | 1,864 | 1,898 | 32.0 | 1,901 | 52,000 |
| Halls | 1935-36 | 0.83 | 1,642 | 1,642 | 1,662 | 131.0 | 1,664 | 94,000 |
| Harrow | 1958-59 | 0.43 | 1,255 | 1,255 | 1,269 | 40.0 | 1,278 | 68,000 |
| Haven Way | 1991-92 | 0.13 | 1,323 | 1,323 | 1,329 | 20.0 | 1,336 | 38,200 |
| Hay | 1936-37 | 0.20 | 1,890 | 1,890 | 1,908 | 36.0 | 1,915 | 37,000 |
| Hillcrest | 1962-63 | 0.35 | 864 | 864 | 885 | 18.0 | 901 | 58,000 |
| Hog | 1969-70 | 0.32 | 1,520 | 1,520 | 1,535 | 32.0 | 1,547 | 43,000 |
| Hook East | 1968-69 | 0.18 | 1,198 | 1,198 | 1,215 | 37.0 | 1,222 | 33,800 |
| Hook West | 1970-71 | 0.17 | 1,145 | 1,145 | 1,165 | 40.0 | 1,172 | 33,700 |
| Inverness | 1982-83 | 0.03 | 1,253 | 1,253 | 1,257 | 20.0 | 1,261 | 3,300 |
| Irving Drive | 1974-75 | 0.03 | 906 | 905 | 915 | 12.0 | 920 | 1,200 |
| Kinneloa | 1964-65 | 0.20 | 1,370 | 1,370 | 1,403 | 76.0 | 1,408 | 36,000 (15) |
| Kinneloa - West | 1966-67 | 0.19 | 1,385 | 1,385 | 1,413 | 22.0 | 1,421 | 35,000 |
| La Tuna | 1955-56 | 5.34 | 1,109 | 1,110 | 1,140 | 75.0 | 1,157 | 495,000 |
| Lannan | 1954-55 | 0.25 | 1,017 | 1,015 | 1,036 | 14.0 | 1,043 | 41,000 |
| Las Flores | 1935-36 | 0.45 | 1,685 | 0 (9) | 1,716 | 50.0 | 1,726 | 56,000 |
| Las Lomas | 1983-84 | 0.07 | 887 | 887 | 906 | 77.0 | 909 | 17,000 |
| Limekiln | 1963-64 | 3.72 | 992 | 992 | 1,003 | 77.0 | 1,019 | 172,000 |
| Lincoln | 1935-36 | 0.50 | 1,276 | 1,276 | 1,304 | 56.0 | 1,323 | 38,000 |
| Linda Vista | 1970-71 | 0.37 | 980 | 980 | 990 | 40.0 | 996 | 3,200 |
| Little Dalton | 1959-60 | 3.31 | 1,140 | 1,140 | 1,186 | 84.0 | 1,200 | 661,000 |
| Maddock | 1954-55 | 0.26 | 889 | 892 | 901 | 36.0 | 904 | 45,000 |
| May No. 1 | 1953-54 | 0.70 | 1,666 | 1,666 | 1,684 | 60.0 | 1,693 | 64,000 |
| May No. 2 | 1953-54 | 0.09 | 1,663 | 1,664 (2) | 1,670 | 20.0 | 1,674 | 13,000 |
| Monument | 1981-82 | 0.11 | 944 | 942 | 950 | 12.0 | 954 | 7,000 |

**FOOTNOTES**

(1) Lowest clear water outlet, not spillway.
(2) Elevation of spillway notch.
(3) Flow line of sluiceway.
(4) Elevation of spillway into outlet channel. Elevation of overflow spillway 1,036.9 feet.
(5) One 30-inch reinforced concrete pipe.
(6) Four 36-inch corrugated metal pipes.
(7) One 36-inch reinforced concrete pipe. (Elevated inlet)
(8) Debris capacity available within right of way limits.
(9) Pit-type basin.
(10) Information unavailable.
(11) Special cleanout required due to limited storage.
(12) Cleanout required when debris reaches or exceeds elevation 1128.9 feet against face of dam.
(13) Values are combined with Cooks debris basin.
(14) Spillway level storage capacity.
(15) Data taken from design drawings.
(16) 7 feet in diameter circular outlet type.
(17) The maximum capacities have been rounded off with regard to appropriate precision consistent with the assumptions used in the development of Hydrology and Sedimentation Manual.
(18) New maximum capacity based on “As-Built” topographic map number 78B-T56.

# EROSION CONTROL

## DEBRIS BASIN - DESIGN DATA:

Including 2019-2020 Storm Season
(Sedimentation Management Unit)

| Debris Basin | First Debris Season | Uncontrolled Drainage Area Above Basin | Bottom Elev. at Max Cap. | Elevation Port Invert | Elevation Spillway Crest | Width Spillway | Elevation Crest of Dam | Maximum Debris Capacity |
|---|---|---|---|---|---|---|---|---|
| | | (Sq. Mi.) | (Ft.) | (Ft.) | (Ft.) | (Ft.) | (AMSL) | (Cu. Yds.) |
| Morgan | 1964-65 | 0.60 | 1,138 | 1,138 | 1,162 | 45.0 | 1,172 | 78,500 |
| Mountbatten | 1983-84 | 0.01 | 1,136 | 1,136 | 1,145 | 20.0 | 1,146 | 3,300 |
| Mull | 1973-74 | 0.15 | 1,147 | 1,147 | 1,154 | 20.0 | 1,165 | 13,000 |
| Mullally (11) | 1974-75 | 0.34 | 2,420 | 2,420 | 2,435 | 42.0 | 2,440 | 14,700 |
| Newhall | 2007-08 | 0.52 | 1,072 | 1,072 | 1,076 | 20.0 | 1,090 | 14,024 |
| Nichols | 1937-38 | 0.94 | 480 | 481 | 485 | 50.0 | 495 | 14,000 |
| Oak | 1975-76 | 0.05 | 2,144 | 2,146 | 2,153 | 50.0 | 2,156 | 13,000 |
| Oak Park | 2001-02 | 0.07 | 1,042 | 1,042 | 1,060 | 18.7 | 1,064 | 15,000 |
| Oakglade | 1974-75 | 0.06 | 1,275 | 1,280 | 1,298 | 20.0 | 1,305 | 15,200 |
| Oakmont View Drive | 1984-85 | 0.02 | 1,316 | 1,316 | 1,328 | 20.0 | 1,329 | 3,400 |
| Oliver | 1989-90 | 0.18 | 1,258 | 1,258 | 1,278 | 41.0 | 1,283 | 32,000 |
| Pickens | 1935-36 | 1.50 | 1,564 | 1,564 | 1,600 | 123.0 | 1,613 | 156,000 |
| Pinelawn | 1973-74 | 0.02 | 2,431 | 2,431 | 2,443 | (7) | 2,449 | 4,800 |
| Rowley | 1953-54 | 0.21 | 1,704 | 1,704 | 1,714 | 60.0 | 1,722 | 43,000 |
| Rowley (Upper) | 1976-77 | 0.31 | 1,926 | 1,926 | 1,946 | 42.0 | 1,951 | 29,000 |
| Rubio | 1943-44 | 1.26 | 1,582 | 1,582 | 1,611 | 66.8 | 1,626 | 150,000 |
| Ruby (Lower) | 1955-56 | 0.28 | 811 | 810 | 834 | 45.0 | 840 | 40,200 |
| Saddleback #1 | 1988-89 | 0.12 | 1,850 | 1,850 | 1,855 | 21.0 | 1,860 | 11,865 |
| Saddleback #2 | 2003-04 | 0.02 | 1,856 | 1,856 | 1,870 | 21.0 | 1,875 | 22,900 |
| Saddleback #3 | 2003-04 | 0.01 | 1,875 | 1,875 | 1,890 | 21.0 | 1,896 | 44,000 |
| Santa Anita | 1959-60 | 1.70 | 748 | 749 (3) | 775 | 160.0 | 796 | 395,000 |
| Sawpit | 1954-55 | 2.84 | 930 | 930 | 982 | 110.0 | 1,000 | 636,000 |
| Schoolhouse | 1962-63 | 0.28 | 1,460 | 1,460 | 1,478 | 20.0 | 1,491 | 68,000 |
| Schwartz | 1976-77 | 0.25 | 1,295 | 1,295 | 1,313 | 35.0 | 1,319 | 45,000 |
| Shields | 1937-38 | 0.06 | 2,050 | 2,050 | 2,058 | 30.0 | 2,070 | 20,000 |
| Sierra Madre Dam (12) | 1927-28 | 2.39 | 1,120 | 1,120 | 1,172 | 62.5 | 1,175 | 136,000 |
| Sierra Madre Villa | 1957-58 | 1.46 | 1,069 | 1,069 | 1,089 | 48.0 | 1,103 | 402,000 |
| Snover | 1936-37 | 0.21 | 1,863 | 1,863 | 1,879 | 40.0 | 1,894 | 37,000 |
| Sombrero | 1969-70 | 1.06 | 1,540 | 1,540 | 1,565 | 45.0 | 1,580 | 88,000 |
| Spinks | 1958-59 | 0.44 | 750 | 750 | 762 | 40.0 | 766 | 56,000 |
| Starfall | 1973-74 | 0.13 | 2,428 | 2,428 | 2,442 | 30.0 | 2,447 | 28,300 |
| Stetson | 1969-70 | 0.29 | 1,556 | 1,555 | 1,570 | 32.0 | 1,579 | 41,000 |
| Stough | 1940-41 | 1.65 | 1,006 | 1,006 | 1,032 (4) | 100.0 | 1,044 | 181,000 |

**FOOTNOTES**

(1) Lowest clear water outlet, not spillway.
(2) Elevation of spillway notch.
(3) Flow line of sluiceway.
(4) Elevation of spillway into outlet channel. Elevation of overflow spillway 1,036.9 feet.
(5) One 30-inch reinforced concrete pipe.
(6) Four 36-inch corrugated metal pipes.
(7) One 36-inch reinforced concrete pipe. (Elevated inlet)
(8) Debris capacity available within right of way limits.
(9) Pit-type basin.
(10) Information unavailable.
(11) Special cleanout required due to limited storage.
(12) Cleanout required when debris reaches or exceeds elevation 1128.9 feet against face of dam.
(13) Values are combined with Cooks debris basin.
(14) Spillway level storage capacity.
(15) Data taken from design drawings.
(16) 7 feet in diameter circular outlet type.
(17) The maximum capacities have been rounded off with regard to appropriate precision consistent with the assumptions used in the development of Hydrology and Sedimentation Manual.
(18) New maximum capacity based on “As-Built” topographic map number 78B-T56.

# EROSION CONTROL

## DEBRIS BASIN - DESIGN DATA:

Including 2019-2020 Storm Season
(Sedimentation Management Unit)

| Debris Basin | First Debris Season | Uncontrolled Drainage Area Above Basin | Bottom Elev. at Max Cap. | Elevation Port Invert | Elevation Spillway Crest | Width Spillway | Elevation Crest of Dam | Maximum Debris Capacity |
|---|---|---|---|---|---|---|---|---|
| | | (Sq. Mi.) | (Ft.) | (Ft.) | (Ft.) | (Ft.) | (AMSL) | (Cu. Yds.) |
| Sturtevant | 1967-68 | 0.03 | 975 | 971 | 984 | 8.0 | 990 | 4,700 |
| Sullivan | 1970-71 | 2.38 | 570 | 570 | 587 | 50.0 | 599 | 51,000 |
| Sunnyside | 1970-71 | 0.02 | 1,290 | 1,290 | 1,300 | 15.0 | 1,304 | 3,400 |
| Sunset (Lower) | 1963-64 | 0.45 | 1,004 | 995 | 1,040 | 40.0 | 1,056 | 185,000 |
| Sunset (Upper) | 1928-29 | 0.44 | 1,574 | 1,574 | 1,604 | 75.0 | 1,610 | 24,655 |
| Sunset Canyon-Deer | 1982-83 | 0.21 | 1,382 | 1,381 | 1,402 | 24.0 | 1,409 | 5,000 |
| Turnbull | 1952-53 | 0.99 | 476 | 476 | 492 | 40.0 | 503 | 22,000 |
| Upper Shields | 1976-77 | 0.22 | 2,498 | 2,498 | 2,530 | 33.0 | 2,537 | 40,000 |
| Verdugo | 1935-36 | 9.40 | 1,110 | 1,110 | 1,120 | 145.0 | 1,131 | 131,000 |
| Ward | 1956-57 | 0.12 | 2,022 | 2,022 | 2,043 | 58.0 | 2,045 | 26,000 |
| West Ravine | 1935-36 | 0.25 | 1,484 | 1,470 (1) | 1,502 | 20.0 | 1,506 | 39,000 |
| Westridge | 1974-75 | 0.02 | 894 | 894 | 905 | 10.7 | 906 | 4,200 (14) |
| Wildwood | 1967-68 | 0.65 | 1,343 | 1,343 | 1,354 | 50.0 | 1,360 | 21,000 |
| William S. Hart Park | 1983-84 | 0.09 | 1,282 | 1,280 | 1,290 | 19.0 | 1,293 | 2,400 |
| Wilson | 1962-63 | 2.58 | 1,493 | 1,493 | 1,526 | 60.0 | 1,543 | 313,000 |
| Winery | 1968-69 | 0.18 | 1,920 | 1,920 | 1,935 | 20.0 | 1,945 | 29,000 |
| Zachau | 1956-57 | 0.35 | 1,803 | 1,803 | 1,820 | 44.0 | 1,828 | 48,000 |
| **117 DEBRIS BASINS** | | **73.77** | | | | | | **8,033,489** |

**FOOTNOTES**

(1) Lowest clear water outlet, not spillway.
(2) Elevation of spillway notch.
(3) Flow line of sluiceway.
(4) Elevation of spillway into outlet channel. Elevation of overflow spillway 1,036.9 feet.
(5) One 30-inch reinforced concrete pipe.
(6) Four 36-inch corrugated metal pipes.
(7) One 36-inch reinforced concrete pipe. (Elevated inlet)
(8) Debris capacity available within right of way limits.
(9) Pit-type basin.
(10) Information unavailable.
(11) Special cleanout required due to limited storage.
(12) Cleanout required when debris reaches or exceeds elevation 1128.9 feet against face of dam.
(13) Values are combined with Cooks debris basin.
(14) Spillway level storage capacity.
(15) Data taken from design drawings.
(16) 7 feet in diameter circular outlet type.
(17) The maximum capacities have been rounded off with regard to appropriate precision consistent with the assumptions used in the development of Hydrology and Sedimentation Manual.
(18) New maximum capacity based on “As-Built” topographic map number 78B-T56.

# EROSION

## DEBRIS BASIN - DEBRIS MANAGEMENT SUMMARY

| Debris Basin | DPA Zone | Number of Seasons | Debris Deposited* | Maximum Debris Production** | Cumulative Debris Removed |
|---|---|---|---|---|---|
| | | | ( Cu. Yds. ) | ( Cu. Yds. ) | ( Cu. Yds. ) |
| Aliso | 4 | 51 | 14,947 | 52,206 | 345074 |
| Arbor Dell | 2 | 50 | 0 | 4,294 | 8603 |
| Auburn | 1 | 67 | 0 | 24,164 | 109596 |
| Bailey | 1 | 76 | 0 | 116,309 | 321126 |
| Beatty | 1 | 50 | 0 | 18,353 | 44558 |
| Big Dalton | 1 | 61 | 0 | 296,680 | 1208452 |
| Bigbriar | 1 | 40 | 0 | 4,517 | 9485 |
| Blanchard | 1 | 53 | 0 | 36,593 | 106617 |
| Blue Gum | 1 | 53 | 0 | 19,123 | 49251 |
| Brace | 2 | 50 | 0 | 18,164 | 70872 |
| Bracemar | 2 | 40 | 0 | 437 | 1545 |
| Bradbury | 1 | 65 | 0 | 70,219 | 317737 |
| Brand | 1 | 82 | 0 | 109,195 | 487118 |
| Buena Vista | 1 | 35 | 0 | 402 | 490 |
| Carriage House | 1 | 50 | 0 | 3,459 | 7725 |
| Carter | 1 | 67 | 0 | 12,559 | 53409 |
| Cassara | 1 | 45 | 0 | 10,301 | 38891 |
| Chamberlain | 2 | 46 | 0 | 437 | 1156 |
| Chandler | 2 | 25 | 0 | 2,666 | 6806 |
| Childs | 1 | 57 | 0 | 30,154 | 101952 |
| Cloud Creek | 1 | 49 | 0 | 3,931 | 8165 |
| Cloudcroft | 4 | 47 | 0 | 6,060 | 13992 |
| Cooks | 1 | 69 | 0 | 53,092 | 200494 |
| Cooks M-1A | 1 | 45 | 0 | 33,741 | 89688 |
| Crescent Glen | 1 | 20 | 0 | 1,148 | 1148 |
| Crestview | 1 | 35 | 0 | 60 | 2240 |
| Crocker | 8 | 38 | 0 | 5,745 | 13706 |
| Deer | 1 | 67 | 0 | 44,186 | 177248 |
| Denivelle | 2 | 45 | 0 | 5,477 | 13647 |
| Devonwood | 1 | 39 | 0 | 5,818 | 10325 |
| Dry Canyon-South Fork | 4 | 42 | 0 | 5,325 | 18278 |
| Dunsmuir | 1 | 85 | 0 | 122,482 | 509220 |
| Eagle | 1 | 83 | 0 | 41,690 | 229530 |
| Elmwood | 1 | 56 | 0 | 16,089 | 57891 |
| Emerald-East | 2 | 55 | 0 | 4,239 | 18140 |
| Englewild | 1 | 59 | 0 | 60,194 | 154128 |
| Fair Oaks | 1 | 85 | 0 | 15,711 | 116816 |
| Fern | 1 | 85 | 0 | 23,867 | 189106 |
| Fieldbrook | 6 | 46 | 0 | 489 | 2210 |
| Golf Club Drive | 2 | 51 | 0 | 11,631 | 46659 |
| Gooseberry | 1 | 25 | 0 | 1,682 | 2709 |
| Gordon | 1 | 48 | 0 | 3,810 | 8409 |
| Gould | 1 | 73 | 0 | 23,684 | 141198 |
| Gould Upper | 1 | 43 | 0 | 46,332 | 88302 |
| Halls | 1 | 76 | 0 | 150,624 | 556941 |
| Harrow | 1 | 63 | 0 | 63,393 | 134302 |
| Haven Way | 2 | 50 | 0 | 11,823 | 32580 |
| Hay | 1 | 83 | 0 | 58,671 | 138796 |
| Hillcrest | 1 | 58 | 0 | 11,659 | 67313 |
| Hog | 1 | 53 | 0 | 22,410 | 49786 |
| Hook East | 1 | 52 | 0 | 40,153 | 75059 |
| Hook West | 1 | 50 | 0 | 10,180 | 28764 |
| Inverness | 2 | 38 | 0 | 1,341 | 1804 |
| Irving Drive | 2 | 46 | 0 | 577 | 2472 |

* Debris Deposited is an estimated figure based on the number of truckloads of debris removed from the basin.

** Maximum Debris Production since previous basin cleanout.

# EROSION

## DEBRIS BASIN - DEBRIS MANAGEMENT SUMMARY

| Debris Basin | DPA Zone | Number of Seasons | Debris Deposited* | Maximum Debris Production** | Cumulative Debris Removed |
|---|---|---|---|---|---|
| | | | ( Cu. Yds. ) | ( Cu. Yds. ) | ( Cu. Yds. ) |
| Kinneloa East | 1 | 55 | 0 | 30,899 | 107395 |
| Kinneloa West | 1 | 55 | 0 | 43,499 | 160495 |
| La Tuna | 2 | 65 | 0 | 172,051 | 933505 |
| Lannan | 1 | 67 | 0 | 18,243 | 90264 |
| Las Flores | 1 | 81 | 0 | 35,600 | 246554 |
| Las Lomas | 1 | 38 | 0 | 48 | 11976 |
| Limekiln | 4 | 57 | 1,330 | 55,055 | 460284 |
| Lincoln | 1 | 85 | 0 | 48,289 | 188592 |
| Linda Vista | 2 | 45 | 0 | 3,400 | 19075 |
| Little Dalton | 1 | 61 | 0 | 337,789 | 1329180 |
| Maddock | 1 | 66 | 0 | 16,170 | 87826 |
| Marston_Paragon | 5 | 32 | 0 | 879 | 1949 |
| May No.1 | 2 | 67 | 0 | 45,771 | 270408 |
| May No.2 | 2 | 67 | 0 | 6,176 | 34455 |
| Monument | 6 | 39 | 0 | 345 | 999 |
| Morgan | 1 | 56 | 0 | 12,923 | 39214 |
| Mountbatten | 1 | 37 | 0 | 60 | 182 |
| Mull | 1 | 47 | 0 | 1,052 | 3036 |
| Mullally | 1 | 46 | 0 | 57,569 | 135840 |
| Nichols | 4 | 83 | 0 | 24,106 | 139406 |
| Oak | 1 | 45 | 0 | 6,911 | 20591 |
| Oak Park | 1 | 20 | 0 | 0 | 0 |
| Oakglade | 1 | 46 | 0 | 1,242 | 1657 |
| Oakmont View Drive | 1 | 36 | 0 | 221 | 686 |
| Oliver | 1 | 44 | 0 | 16,255 | 44453 |
| Pickens | 1 | 85 | 0 | 174,738 | 937290 |
| Pinelawn | 1 | 47 | 0 | 5,296 | 10871 |
| Rowley Lower | 1&7 | 67 | 0 | 16,659 | 85814 |
| Rowley Upper | 1 | 44 | 0 | 31,884 | 66106 |
| Rubio | 1 | 77 | 0 | 133,045 | 424489 |
| Ruby Lower | 1 | 65 | 0 | 8,302 | 21722 |
| Rye | 5 | 39 | 0 | 10,049 | 19619 |
| Saddleback #1 | 1 | 30 | 0 | 2,440 | 5010 |
| Saddleback #2 | 1 | 16 | 0 | 1,287 | 1287 |
| Saddleback #3 | 1 | 16 | 0 | 21,888 | 21888 |
| Santa Anita | 1 | 61 | 0 | 171,176 | 1041139 |
| Sawpit | 1 | 66 | 0 | 233,834 | 742080 |
| Scholl | 2 | 75 | 0 | 3,457 | 23363 |
| Schoolhouse | 1 | 58 | 0 | 21,627 | 47481 |
| Schwartz | 1 | 44 | 0 | 23,359 | 74163 |
| Shields | 1 | 83 | 0 | 35,147 | 166097 |
| Sierra Madre Dam | 1 | 83 | 0 | 95,170 | 371077 |
| Sierra Madre Villa | 1 | 63 | 0 | 171,775 | 794822 |
| Snover | 1 | 83 | 0 | 60,665 | 174076 |
| Sombrero | 1 | 51 | 0 | 26,830 | 129507 |
| Spinks | 1 | 62 | 0 | 16,361 | 87766 |
| Starfall | 1 | 47 | 0 | 16,041 | 43162 |
| Stetson | 1 | 51 | 0 | 14,161 | 50060 |
| Stough | 2 | 80 | 0 | 29,577 | 185088 |
| Sturtevant | 1 | 53 | 0 | 457 | 1841 |
| Sullivan | 4 | 50 | 0 | 47,000 | 177181 |
| Sunnyside | 1 | 50 | 0 | 1,621 | 4351 |
| Sunset Canyon-Deer | 1 | 39 | 4,320 | 6,921 | 31105 |
| Sunset Lower | 1 | 77 | 0 | 35,290 | 232128 |

* Debris Deposited is an estimated figure based on the number of truckloads of debris removed from the basin.

** Maximum Debris Production since previous basin cleanout.

# EROSION

## DEBRIS BASIN - DEBRIS MANAGEMENT SUMMARY

| Debris Basin | DPA Zone | Number of Seasons | Debris Deposited* | Maximum Debris Production** | Cumulative Debris Removed |
|---|---|---|---|---|---|
| | | | ( Cu. Yds. ) | ( Cu. Yds. ) | ( Cu. Yds. ) |
| Sunset Upper | 1 | 79 | 0 | 27,037 | 223896 |
| Turnbull | 6 | 68 | 0 | 15,864 | 78991 |
| Upper Shields | 1 | 44 | 0 | 41,790 | 97207 |
| Verdugo | 1 | 83 | 15,048 | 108,654 | 1006219 |
| Ward Lower | 1 | 76 | 0 | 17,769 | 86147 |
| West Ravine | 1 | 85 | 0 | 29,866 | 172651 |
| Westridge | 1&7 | 37 | 0 | 187 | 258 |
| Wildwood | 3&5 | 53 | 0 | 16,699 | 144261 |
| William S Hart Park | 5 | 36 | 0 | 321 | 490 |
| Wilson | 2 | 58 | 0 | 62,830 | 432750 |
| Winery | 1 | 52 | 0 | 53,424 | 89935 |
| Zachau | 1 | 64 | 0 | 48,060 | 144428 |

* Debris Deposited is an estimated figure based on the number of truckloads of debris removed from the basin.

** Maximum Debris Production since previous basin cleanout.

# WATER CONSERVATION

Information presented in this section includes amounts of local, imported, and reclaimed water conserved in groundwater recharge areas and information on the seawater barrier projects which prevent seawater intrusion into groundwater basins in the coastal areas of the County. Pertinent data is presented regarding the locations and descriptions of Public Works' water conservation facilities as well as facilities owned by others. Additional data not presented in this report or its appendices can be obtained by contacting the custodian of hydrologic records.

## CONSERVING THE WATERS

In addition to the flood control program, Public Works has the equally important mission of conserving as much of the storm and other waters as practicable. The use of water conservation facilities adjacent to river channels and in soft-bottom channels permits water to percolate into groundwater basins for later pumping. These groundwater recharge facilities are located in areas where the underlying soils are composed of permeable formations and in hydraulic connection with the underlying aquifer.

The various types of water conserved, local, imported, and reclaimed are construed to have the following meanings in this section: Local water is primarily runoff due to rainfall on the mountain and valley watersheds, dam releases, and rising water within the County. Imported water is water originating outside the County either from Northern California or from the Colorado River. Reclaimed water is the effluent produced by the Whittier Narrows Water Reclamation Plant, the San Jose Creek Water Reclamation Plant, and the Pomona Water Reclamation Plant, all operated by the County of Los Angeles Sanitation District. Reclaimed water is also injected at the seawater barriers. The West Basin Municipal Water District, the Los Angeles Department of Water and Power, and the Water Replenishment of Southern California, provide advanced treated recycled water for direct injection.

The importance of this activity is apparent when it is realized that about 30 to 40 percent of the water used in the County is pumped from groundwater supplies. The growth of the County, combined with periodic droughts, has seriously depleted these supplies on numerous occasions.

Public Works' policy is to conserve the maximum possible amount of storm water consistent with runoff quantity and quality, capacities of the spreading facilities, and groundwater conditions.

## IMPORTED WATER

During the reporting period, Public Works received water imported from the State Water Project in coordinate with the Main San Gabriel Basin Watermaster (MSGBWM) the Water Replenishment District of Southern California (WRD), and the Upper Los Angeles River Area Watermaster (ULARAWM) at the following facilities:

- San Gabriel Canyon Spreading Grounds
- Santa Fe Spreading Grounds
- San Gabriel River
- Little Dalton Spreading Grounds
- Forbes Spreading Grounds
- Irwindale Spreading Basin/Manning Pit
- Citrus Spreading Grounds
- Ben Lomond Spreading Grounds
- Valley Rubber Dam Spreading Areas
- Pacoima Spreading Grounds
- Lopez Spreading Grounds
- Rio Hondo Spreading Grounds

# WATER CONSERVATION

The MSGBWM procures imported water from the Metropolitan Water District (MWD) and San Gabriel Valley Municipal Water District (SGVMWD) on behalf of the groundwater rights holders in the Main San Gabriel Basin, Upper San Gabriel Canyon Basin, and Glendora Basin.

The WRD procures imported water from the MWD to replenish the groundwater supplies in the Central Basin.

The Cities of Los Angeles and Burbank coordinate imported water deliveries from LADWP and MWD to replenish the groundwater supplies in the San Fernando Basin.

## RECYCLED WATER

The County Sanitation District's Whittier Narrows Water Reclamation Plant effluent purchased by the Water Replenishment District of Southern California is transported to the Rio Hondo and San Gabriel Coastal Basin Spreading Grounds for groundwater replenishment.

The County Sanitation District's San Jose Creek Water Reclamation Plant made its first delivery of effluent in November 1972. The effluent released into San Jose Creek, San Gabriel River, or directly delivered to San Gabriel Coastal Spreading Ground via pipeline is purchased by the Water Replenishment District of Southern California.

Water from the Pomona Reclamation Plant is released down the San Jose Creek - San Gabriel River System to Public Works' recharge facilities in the Central Basin spreading grounds.

The quantity limitations for recycled water are contained in Board Order No. R4-2009-0048-A-01, as adopted on April 10, 2014. The maximum quantity of recycled water spread in any ten-year period shall not exceed 45 percent of the total inflow from all sources into the Montebello Forebay during that period.

## SEAWATER BARRIER PROJECTS

Public Works operates 311 seawater barrier injection wells to protect the groundwater in the West Coast and Central Basins against seawater intrusion by creating freshwater pressure ridges along the coastline. The amounts of water injected by these wells during the reporting period are as follows:

| Facility | Imported Water (Acre-Feet) | Recycled Water (Acre-Feet) |
|---|---|---|
| Alamitos Barrier Project: | | |
| Los Angeles Portion | 2,525 | 1,062 |
| Orange County Portion* | 1,600 | 723 |
| Dominguez Gap Barrier Project | 4,438 | 4,027 |
| West Coast Basin Barrier Project | 2,187 | 13,018 |

*****Injected on behalf of the Orange County Water District*

## SEASONAL DATA AND MAPS

During the reporting period, weekly, monthly, and semi-annual measurements of groundwater levels in observation wells located throughout the groundwater basins in the County of Los Angeles were made and processed.

Locations of the key wells noted herein are shown on the well map in the Water Conservation Summary section. Historical key wells level data can be viewed in **Appendix L.**

# WATER CONSERVATION

Static groundwater elevation contour maps for the three major groundwater regions in the County of Los Angeles are available from the local basin water agencies:

| Groundwater Basin | Contact |
|---|---|
| Upper Los Angeles River Area (San Fernando Valley) | Upper Los Angeles River Watermaster<br>P.O. Box 111, Room 1455<br>Los Angeles, CA 90051<br>(213) 367-1020<br>(213) 367-1131 (FAX) |
| San Gabriel Valley | Main San Gabriel Basin Watermaster<br>729 North Azusa Avenue<br>Azusa, CA 91702<br>(626) 815-1300<br>(626) 815-1303 (FAX) |
| Coastal Plain | Water Replenishment District of Southern California<br>12621 East 166th Street<br>Cerritos, CA 90703<br>(562) 921-5521 |

## GROUNDWATER BASINS AND GROUNDWATER RECHARGE

Groundwater in the County of Los Angeles is stored in basins underlying five major geographic areas. These groundwater basins are separated by geologic features which impede groundwater movement or by political boundaries. A map of these groundwater basins and Public Works' spreading grounds is available upon request from Public Works. General spreading grounds facility information is included in the summary section. Monthly water conservation data for the reporting period at Public Works' facilities and other pertinent facilities are included in the Water Conservation Summary section of this report. The monthly imported and recycled water deliveries for the reporting period are also included in the Water Conservation Summary section. The following is a background summary of Public Works' groundwater recharge activities within each of these major areas:

## LOS ANGELES COUNTY-WIDE

Public Works operates 2,436 acres of spreading grounds and soft-bottom channel spreading areas for replenishment of local groundwater supplies. Public Works also assisted in the operation and maintenance of 269 acres of spreading grounds owned by others. An additional 656 acres of spreading grounds are controlled maintained and operated by other agencies. The total gross acreage of spreading grounds in the County of Los Angeles is 3,361 acres.

Groundwater replenishment consists of storm runoff, imported water, and recycled water. Countywide, Public Works spread the following amounts during the reporting period:

| | |
|---|---|
| County Rainfall Index (% of Normal) | 104 |
| Storm Runoff (acre-feet) | 158,565 |
| Imported Water (acre-feet) | 58,475 |
| Recycled Water (acre-feet) | 54,241 |

# WATER CONSERVATION

Public Works is continuing its efforts to improve its water spreading facilities in order to maximize the amounts of water conserved and to simplify the spreading operations.

## SAN GABRIEL VALLEY

Public Works operates 20 spreading facilities in the San Gabriel Valley that receive direct valley runoff and flows from the San Gabriel Mountains. Some of these facilities can also receive imported water. Valleywide, Public Works spread the following amounts during the reporting period:

| | |
|---|---|
| Total Storm Runoff * (acre-feet) | 84,840 |
| Imported Water (acre-feet) | 53,243 |
| Diversions to Grounds Owned by Others (acre-feet) | 4,262 |

* Includes Runoff from Fish Canyon & Sierra Madre Spreading Grounds.

Public Works' spreading grounds replenished the Valley's several groundwater basins as follows:

| | **Storm Water (acre-feet)** | **Imported Water (acre-feet)** | **Key Wells** |
|---|---|---|---|
| Main San Gabriel Basin | 45,732 | 43,267 | 3030F, 2965C |
| Upper San Gabriel Canyon Basin | 33,978 | 8,754 | 4284A |
| Lower San Gabriel Canyon Basin | 471 | | 4285 |
| Wayhill Basin | 5 | 283 | |
| Foothill Basin | 1,785 | | |
| Glendora Basin | 733 | 434 | |
| Claremont Heights Basin | | | 4508A, 4508B |
| Live Oak Basin | | | |
| Chino Basin | | | |
| San Dimas Basin | 58 | 506 | |
| Pomona Basin | | | 3251E, 3261P, 4469A |
| Puente and Spadra Basins | | | |
| Raymond Basin | 2,079 | | 4057H |

# WATER CONSERVATION

## COASTAL PLAIN

The groundwater basins underlying the Coastal Plain are divided by geological features into the Central (includes the Montebello and Los Angeles Forebays), West Coast, Santa Monica, and Hollywood Basins. Most of the water is spread in the Montebello Forebay. Public Works spread the following amounts in the the Coastal Plain during the reporting period:

| | |
|---|---|
| Storm Runoff (acre-feet) | 51,400 |
| Imported Water (acre-feet) | 0 |
| Recycled Water (acre-feet) | 54,241 |

### Central Basin

The Central Basin has the most storage capacity of the basins in the Coastal Plain. In addition to the water recharged in Public Works' spreading facilities, water injected in the Alamitos Barrier Project also contributes to the replenishment of the pressure aquifers underlying the Central Basin. The basin contains Key Well Nos. 460K, 1601T, and 906D.

### West Coast Basin

The West Coast basin is the second largest basin underlying the Coastal Plain and is separated by the Newport-Inglewood Fault zone. Groundwater is primarily recharged by Central Basin subsurface flows and by water injected by Public Works in the West Coast Basin and Dominguez Gap Barrier Projects. Groundwater elevations in the West Coast basin are below sea level except in the area of the West Coast Basin Barrier injection mound. The basin contains Key Well Nos. 1346D and 760C.

### Santa Monica and Hollywood Basins

There are no Public Works spreading facilities in either of these basins.

## SAN FERNANDO VALLEY

The San Fernando Valley is also known as the Upper Los Angeles River Area (ULARA). Most of the runoff from the surrounding mountains flows to the Valley. The Valley is composed of four basins:

### San Fernando Main Basin

The basin is the largest basin underlying the San Fernando Valley. The basin contains Key Well Nos. 3872H and 4709. Public Works spread the following during the reporting period:

| | |
|---|---|
| Storm Runoff (acre-feet) | 22,325 |
| Imported Water (acre-feet) | 5,232 |
| Recycled Water (acre-feet) | 0 |

# WATER CONSERVATION

**Sylmar, Verdugo, and Eagle Rock Basins**

Public Works has no spreading facilities in these much smaller basins.

## SANTA CLARITA VALLEY

Public Works has no spreading facilities in the area. Much of the Valley is open space, permitting substantial natural percolation. The Upper Santa Clarita subunit comprises five basins.

## ANTELOPE VALLEY

There are several groundwater subbasins underlying the Antelope Valley. Five of them are located within the County of Los Angeles. Public Works operates no spreading facilities in the Antelope Valley. Key Well Nos. 9974 and 8825 are located in the Lancaster and Little Rock sub basins, respectively.

# WATER CONSERVATION

## SUMMARY

**PUBLIC WORKS FACILITIES**

***(See Appendix G)***

**OTHER FACILITIES**

***(See Appendix H)***

**TOTAL MONTHLY WATER CONSERVED**

***(See Appendix I)***

**IMPORTED WATER OUTLET RELEASES**

***(See Appendix J)***

**RECLAIMED WATER**

***(See Appendix K)***

**GROUND WATER FLUCTUATION**

***(See Appendix L)***

***Select groundwater well level data by clicking on the Well Number below.***

| Location | Well No. | Ground Surface Elev. (ft) |
|---|---|---|
| Coastal Plain, City of Long Beach | 0460K | 26.6 |
| Coastal Plain | 0760C | 50.0 |
| Coastal Plain, City of Long Beach | 0906D | 88.8 |
| Central Basin | 1601T | 159.7 |
| Main San Gabriel Basin | 2965C | 245.0 |
| Main San Gabriel Basin, Baldwin Park | 3030F | 386.7 |
| Pomona Basin | 3261P | 999.4 |
| San Fernando Valley, Canoga Park | 3600H | 788.5 |
| San Fernando Valley, Burbank | 3872H | 546.5 |
| Raymond Basin | 4057H | 749.9 |
| San Gabriel Canyon Basin, North of Azusa | 4284A | 658.8 |

# WATER CONSERVATION

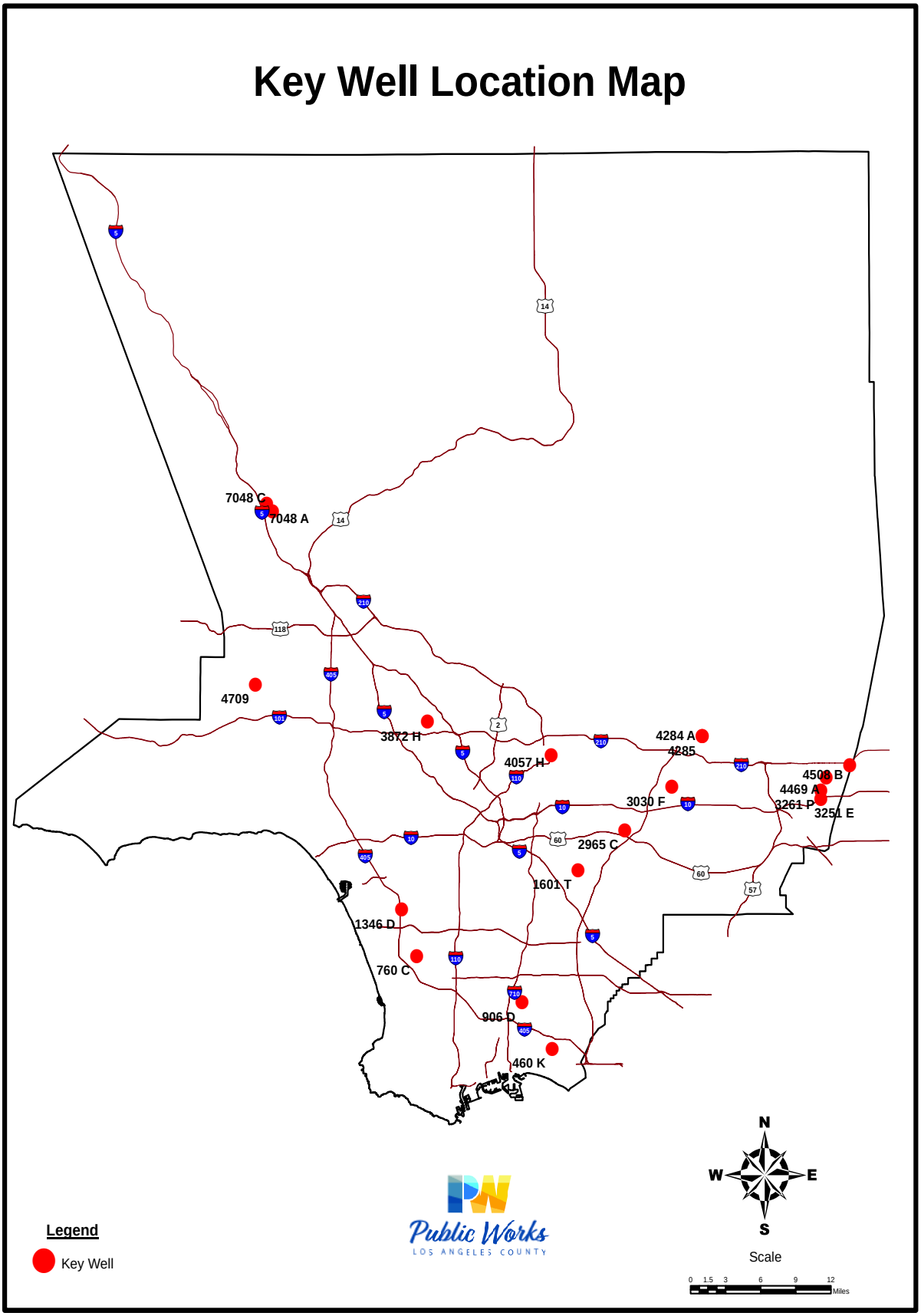

# APPENDIX A

## HYDROLOGIC REPORT 2019 – 2020

## PRECIPITATION - DAILY RAINFALL SUMMARY

# PRECIPITATION

## DAILY RAINFALL SUMMARY

**13C North Hollywood-Lakeside**

Gage Type: Standard Gage

Observation Time: Figures are for a 24-hour period

Latitude 34-08-46 Longitude: 118-21-13 Elevation: 550 Feet

Water Year from 10/01/2019 to 09/30/2020

| Day | Oct | Nov | Dec | Jan | Feb | Mar | Apr | May | Jun | Jul | Aug | Sep |
|---|---|---|---|---|---|---|---|---|---|---|---|---|
| 1 | | | 0.05 | | | | | | | | | |
| 2 | | | | | | | | | | | | |
| 3 | | | | | | | | | | | | |
| 4 | | | 1.15 | | | | | | | | | |
| 5 | | | 0.05 | | | | | | | | | |
| 6 | | | | | | | 1.25 | | | | | |
| 7 | | | 0.20 | | | | 0.51 | | | | | |
| 8 | | | 0.05 | | | | 1.25 | | | | | |
| 9 | | | 0.25 | | | | 0.10 | | | | | |
| 10 | | | | | 0.16 | 0.18 | 0.80 | | | | | |
| 11 | | | | | | 0.22 | 0.12 | | | | | |
| 12 | | | | | | | | | | | | |
| 13 | | | | | | 2.23 | 0.04 | | | | | |
| 14 | | | | | | 0.17 | | | | | | |
| 15 | | | | | | 0.12 | | | | | | |
| 16 | | | | | | | | | | | | |
| 17 | | | | 0.25 | | 0.64 | | | | | | |
| 18 | | | | | | | 0.02 | | | | | |
| 19 | | | | | | | | 0.10 | | | | |
| 20 | | | | | | 0.06 | | | | | | |
| 21 | | 0.40 | | 0.02 | | | | | | | | |
| 22 | | | | | A | | | | | | | |
| 23 | | | 1.41 | | 0.25A | 1.20 | | | | | | |
| 24 | | | 0.11 | | | | | | | | | |
| 25 | | | | | | | | | | | | |
| 26 | | | 1.43 | | | | | | | | | |
| 27 | | | | | | | | | | | | |
| 28 | | 1.10 | | | | | | | | | | |
| 29 | | 0.90 | | | | | | | | | | |
| 30 | | | | | | | | | | | | |
| 31 | | | | | | | | | | | | |
| Totals | 0.00 | 2.40 | 4.70 | 0.27 | 0.41 | 4.82 | 4.09 | 0.10 | 0.00 | 0.00 | 0.00 | 0.00 |
| | | | | | | | | | | Water Year Total: | | 16.79 |

NOTE: All Values are in units of inches, unless otherwise specified.

LEGEND: A - Acculated Total
E - Estimated
T - Trace, unmeasurable amount of rain

# PRECIPITATION

## DAILY RAINFALL SUMMARY

**21B Woodland Hills**

Gage Type: Standard Gage

Observation Time: Figures are for a 24-hour period

Latitude 34-10-14 Longitude: 118-35-33 Elevation: 875 Feet

Water Year from 10/01/2019 to 09/30/2020

| Day | Oct | Nov | Dec | Jan | Feb | Mar | Apr | May | Jun | Jul | Aug | Sep |
|---|---|---|---|---|---|---|---|---|---|---|---|---|
| 1 | | | 0.05 | | | | | | | | | |
| 2 | | | | | | 0.01 | | | | | | |
| 3 | | | | | | | | | | | | |
| 4 | | | 1.00 | | | | | | | | | |
| 5 | | | | | | | | | | | | |
| 6 | | | 0.05 | | | | 1.63 | | | | | |
| 7 | | | 0.13 | | | | 0.19 | | | | | |
| 8 | | | 0.14 | | | | 0.26 | | | | | |
| 9 | | | | | 0.01 | | 0.81 | | | | | |
| 10 | | | | | | A | 0.53 | | | | | |
| 11 | | | | | | 0.75A | | | | | | |
| 12 | | | | | | 1.05 | | | | | | |
| 13 | | | | | | 1.42 | | | | | | |
| 14 | | | | | | 0.07 | | | | | | |
| 15 | | | | | | 0.21 | | | | | | |
| 16 | | | | 0.11 | | A | | | | | | |
| 17 | | | | | | 1.23A | | | | | | |
| 18 | | | | | | | | 0.09E | | | | |
| 19 | | | | | | A | | | | | | |
| 20 | | 0.01 | | | | 0.06A | | | | | | |
| 21 | | | | | | | | | | | | |
| 22 | | | | | 0.23 | 0.10 | | | | | | |
| 23 | | | 1.71 | | | 1.07 | | | | | | |
| 24 | | | | | | | | | | | | |
| 25 | | | | | | 0.02 | | | | | | |
| 26 | | | 1.93 | | | | | | | | | |
| 27 | | 0.51 | | | | | | | | | | |
| 28 | | 1.20 | | | | | | | | | | |
| 29 | | 0.37 | | | | | | | | | | |
| 30 | | 0.03 | | | | | | | | | | |
| 31 | | | | | | | | | | | | |
| Totals | 0.00 | 2.12 | 5.01 | 0.11 | 0.24 | 5.99 | 3.42 | 0.09 | 0.00 | 0.00 | 0.00 | 0.00 |
| | | | | | | | | | | Water Year Total: | | 16.98 |

NOTE: All Values are in units of inches, unless otherwise specified.

LEGEND: A - Acculated Total
E - Estimated
T - Trace, unmeasurable amount of rain

# PRECIPITATION

## DAILY RAINFALL SUMMARY

**33A Pacoima Dam**

Gage Type: Standard Gage

Observation Time: Figures are for a 24-hour period

Latitude 34-19-48 Longitude: 118-23-59 Elevation: 1500 Feet

Water Year from 10/01/2019 to 09/30/2020

| Day | Oct | Nov | Dec | Jan | Feb | Mar | Apr | May | Jun | Jul | Aug | Sep |
|---|---|---|---|---|---|---|---|---|---|---|---|---|
| 1 | | | 0.09 | | | | | | | | | |
| 2 | | | | | | 0.01 | | | | | | |
| 3 | | | | | | | | | | | | |
| 4 | | | 0.50 | | | | | | | | | |
| 5 | | | 0.38 | | | | 0.10 | | 0.03 | | | |
| 6 | | | | | | | 2.51 | | 0.02 | | | |
| 7 | | | 0.24 | | | | 0.72 | | | | | |
| 8 | | | 0.36 | | | | 1.39 | | | | | |
| 9 | | | 0.37 | | | | 0.24 | | | | | |
| 10 | | | | | | 0.09 | 0.83 | | | | | |
| 11 | | | | | | 0.42 | 0.05 | | | | | |
| 12 | | | | | | | 0.03 | | | | | |
| 13 | | | | | | 2.57 | 0.29 | | | | | |
| 14 | | | T | | | 0.86 | | | | | | |
| 15 | | | | | | 0.50 | | | | | | |
| 16 | | | | | | 0.01 | | | | | | |
| 17 | | | | 0.41 | | 0.95 | | | | | | |
| 18 | | | | T | | 0.03 | | 0.19 | | | | |
| 19 | | | | | | | | 0.51 | | | | |
| 20 | | | | | | 0.23E | | | | | | |
| 21 | | 0.04 | | T | | | | | | | | |
| 22 | | | | | | | | | | | | |
| 23 | | | 0.82 | | 0.01 | 1.03 | | | | | | |
| 24 | | | | | | 0.01 | | | | | | |
| 25 | | | | | | | | | | | | |
| 26 | | | 2.20 | | | 0.02 | | | | | | |
| 27 | | 0.01 | 0.01 | | | | | | | | | |
| 28 | | 1.19 | | | | | | | | | | |
| 29 | | 0.75 | | | | | | | | | | |
| 30 | | | | | | | | | | | | |
| 31 | | | | | | | | | | | | |
| Totals | 0.00 | 1.99 | 4.97 | 0.41 | 0.01 | 6.73 | 6.16 | 0.70 | 0.05 | 0.00 | 0.00 | 0.00 |
| | | | | | | | | | | Water Year Total: | | 21.02 |

NOTE: All Values are in units of inches, unless otherwise specified.

LEGEND: A - Acculated Total
E - Estimated
T - Trace, unmeasurable amount of rain

# PRECIPITATION

## DAILY RAINFALL SUMMARY

**42C Redondo Beach-City Hall**

Gage Type: Standard Gage

Observation Time: Figures are for a 24-hour period

Latitude 33-50-43 Longitude: 118-23-20 Elevation: 70 Feet

Water Year from 10/01/2019 to 09/30/2020

| Day | Oct | Nov | Dec | Jan | Feb | Mar | Apr | May | Jun | Jul | Aug | Sep |
|---|---|---|---|---|---|---|---|---|---|---|---|---|
| 1 | | | | | | | | | | | | |
| 2 | | T | | | | | | | | | | |
| 3 | | | 0.01 | | | | | | | | | |
| 4 | | | 0.70 | | | | | | | | | |
| 5 | | | | | | | 0.04 | | | | | |
| 6 | | | 0.07 | | | | 0.39 | | | | | |
| 7 | | | | | | | 0.42 | | | | | |
| 8 | | | 0.19 | | | 0.04 | | | | | | |
| 9 | | | | 0.01 | 0.06 | 0.02 | 1.21 | | | | | |
| 10 | | | | | 0.02 | 0.15 | 0.20 | T | | | | |
| 11 | | | | | | | | | | | | |
| 12 | | | | | | 0.75 | | | | | | |
| 13 | | | | | | 0.36 | | | | | | |
| 14 | | | | | | 0.02 | | | | | | |
| 15 | | | | | | | | | | | | |
| 16 | | | | 0.11 | | 0.43 | | | | | | |
| 17 | | | | 0.06 | | 0.07 | | | | | | |
| 18 | | | | | | | | 0.12 | | | | |
| 19 | | 0.01 | | | | | | | | | | |
| 20 | | 0.03 | | | | | | | | | | |
| 21 | | 0.01 | | | | | | | | | | |
| 22 | | | 0.90 | | | 0.95 | | | | | | |
| 23 | | | 1.15 | | | 0.16 | | | | | | |
| 24 | | | | | | | | | | | | |
| 25 | | | 0.85 | | | | | | | | | |
| 26 | | | 0.53 | | | | | | | | | |
| 27 | | 0.41 | | | | | | | | | | |
| 28 | | 0.63 | | | | | | | | | | |
| 29 | | 0.15 | | | | | | | | | | |
| 30 | | T | | | | | | | | | | |
| 31 | | | | | | | | | | | | |
| Totals | 0.00 | 1.24 | 4.40 | 0.18 | 0.08 | 2.95 | 2.26 | 0.12 | 0.00 | 0.00 | 0.00 | 0.00 |
| | | | | | | | | | | Water Year Total: | | 11.23 |

NOTE: All Values are in units of inches, unless otherwise specified.

LEGEND: A - Acculated Total
E - Estimated
T - Trace, unmeasurable amount of rain

# PRECIPITATION

## DAILY RAINFALL SUMMARY

**43D Palos Verdes Estates**

Gage Type: Standard Gage

Observation Time: Figures are for a 24-hour period

Latitude 33-47-58 Longitude: 118-23-29 Elevation: 216 Feet

Water Year from 10/01/2019 to 09/30/2020

| Day | Oct | Nov | Dec | Jan | Feb | Mar | Apr | May | Jun | Jul | Aug | Sep |
|---|---|---|---|---|---|---|---|---|---|---|---|---|
| 1 | | | | | | | | | | | | |
| 2 | | | | | | 0.01 | | | | | | |
| 3 | | | | | | | | | | | | |
| 4 | | | 0.58E | | | | | | | | | |
| 5 | | | 0.37E | | | | | | | | | |
| 6 | | | | | | | A | | | | | |
| 7 | | | 0.10E | | | | 0.63A | | | | | |
| 8 | | | 0.01E | | | | 0.52 | | | | | |
| 9 | | | 0.15E | | | | 0.41 | | | | | |
| 10 | | | | | 0.21E | 0.20 | 1.47 | | | | | |
| 11 | | | | | | 0.07 | | | | | | |
| 12 | | | | | | 0.60 | | | | | | |
| 13 | | | | | | | | | | | | |
| 14 | | | | | | | | | | | | |
| 15 | | | | | | | | | | | | |
| 16 | | | | | | 0.52 | | | | | | |
| 17 | | | | 0.27 | | 0.59 | | | | | | |
| 18 | | | | | | | | 0.19 | | | | |
| 19 | | | | | | T | | | | | | |
| 20 | | 0.01 | | | | | | | | | | |
| 21 | | 0.09 | | T | | | | | | | | |
| 22 | | | | | | | | | | | | |
| 23 | | | 2.01 | | 0.03 | 0.87 | | | | | | |
| 24 | | | | | | T | | | | | | |
| 25 | | | | | | | | | | | | |
| 26 | | | 1.55 | | | | | | | | | |
| 27 | | 0.37 | | | | | | | | | | |
| 28 | | 0.81 | | | | | | | A | | | |
| 29 | | 0.21 | | | | | | | 0.08A | | | |
| 30 | | | | | | | | | | | | |
| 31 | | | | | | | | | | | | |
| Totals | 0.00 | 1.49 | 4.77 | 0.27 | 0.24 | 2.86 | 3.03 | 0.19 | 0.08 | 0.00 | 0.00 | 0.00 |
| | | | | | | | | | | Water Year Total: | | 12.93 |

NOTE: All Values are in units of inches, unless otherwise specified.

LEGEND: A - Acculated Total
E - Estimated
T - Trace, unmeasurable amount of rain

# PRECIPITATION

## DAILY RAINFALL SUMMARY

**46D** **Big Tujunga Dam**

Gage Type: Standard Gage

Observation Time: Figures are for a 24-hour period

Latitude 34-17-40 Longitude: 118-11-14 Elevation: 2315 Feet

Water Year from 10/01/2019 to 09/30/2020

| Day | Oct | Nov | Dec | Jan | Feb | Mar | Apr | May | Jun | Jul | Aug | Sep |
|---|---|---|---|---|---|---|---|---|---|---|---|---|
| 1 | | | 0.09 | | | T | | | | | | |
| 2 | | | | | | 0.02 | | | | | | |
| 3 | | | | | | | | | | | | |
| 4 | | | 0.48 | | | | | | | | | |
| 5 | | | 0.44 | | | | 0.13 | | | | | |
| 6 | | | T | | | | 3.24 | | 0.03 | | | |
| 7 | | | 0.30 | | | | 0.69 | | T | | | |
| 8 | | | 0.18 | | | | 1.14 | | | | | |
| 9 | | | 0.65 | | | | 0.28 | | | | | |
| 10 | | | T | | | 0.16 | 0.75 | | | | | |
| 11 | | | | | | 0.33 | 0.02 | | | | | |
| 12 | | | | | | | | | | | | |
| 13 | | | | | | 2.18 | | | | | | |
| 14 | | | | | | 0.19 | | | | | | |
| 15 | | | | | | 0.41 | | | | | | |
| 16 | | | | | | 0.03 | | | | | | |
| 17 | | | | 0.18 | | 1.85 | | | | | | |
| 18 | | | | | | 0.04 | | | | | | |
| 19 | | | | | | 0.02 | | 0.22 | | | | |
| 20 | | 0.21 | | | | 0.12 | | | | | | |
| 21 | | 0.11 | | | | | | | | | | |
| 22 | | | | | T | | | | | | | |
| 23 | | | 1.06 | | 0.14 | 0.99 | | | | | | |
| 24 | | | 0.07 | | | T | | | | | | |
| 25 | | | T | | | | | | | | | |
| 26 | | | 1.93 | | | 0.37 | | | | | | |
| 27 | | 0.14 | 0.20 | | | | | | | | | |
| 28 | | 1.50 | | | | | | | | | | |
| 29 | | 0.56 | | | | | | | | | | |
| 30 | | 0.02 | | | | 0.11 | | | | | | |
| 31 | | | | | | | | | | | | |
| Totals | 0.00 | 2.54 | 5.40 | 0.18 | 0.14 | 6.82 | 6.25 | 0.22 | 0.03 | 0.00 | 0.00 | 0.00 |

Water Year Total: 21.58

NOTE: All Values are in units of inches, unless otherwise specified.

LEGEND: A - Acculated Total
E - Estimated
T - Trace, unmeasurable amount of rain

# PRECIPITATION

## DAILY RAINFALL SUMMARY

**89B** **San Dimas Dam**

Gage Type: Standard Gage

Observation Time: Figures are for a 24-hour period

Latitude 34-09-10 Longitude: 117-46-17 Elevation: 1350 Feet

Water Year from 10/01/2019 to 09/30/2020

| Day | Oct | Nov | Dec | Jan | Feb | Mar | Apr | May | Jun | Jul | Aug | Sep |
|---|---|---|---|---|---|---|---|---|---|---|---|---|
| 1 | | | 0.03 | | | A | | | | | | |
| 2 | | | | | | 0.18A | | | | | | |
| 3 | | | | | 0.08E | | | | | | | |
| 4 | | | 0.40 | | | | | | | | | |
| 5 | | | 1.33 | | | | A | | 0.01 | | | |
| 6 | | | | | | | 0.97A | | | | | |
| 7 | | | A | | | | 1.77 | | | | | |
| 8 | | | A | | | | 1.10 | | | | | |
| 9 | | | 0.65A | | | | 0.17 | | | | | |
| 10 | | | | | 0.06 | 0.37 | 0.89 | | | | | |
| 11 | | | | | | 0.49 | A | | | | | |
| 12 | | | | | | | A | | | | | |
| 13 | | | | | | 1.87 | 0.37A | | | | | |
| 14 | | | | | | A | | | | | | |
| 15 | | | | | | A | | | | | | |
| 16 | | | | | | 0.19A | | | | | | |
| 17 | | | | 0.23 | | 0.47 | | | | | | |
| 18 | | | | | | T | | | | | | |
| 19 | | | | | | T | | 0.21 | | | | |
| 20 | | 0.09 | | | | 0.68 | | | | | | |
| 21 | | 0.59 | | 0.01 | | | | | | | | |
| 22 | | | | | | | | | | | | |
| 23 | | | 0.71 | | 0.17 | 0.79 | | | | | | |
| 24 | | | 0.58 | | | 0.01 | | | | | | |
| 25 | | | 0.10 | | | | | | | | | |
| 26 | | | 2.60 | | | | | | | | | |
| 27 | | 0.02 | 0.10 | | | | | | | | | |
| 28 | | 1.03 | | | | | | | | | | |
| 29 | | 1.67 | | | | | | | | | | |
| 30 | | | | | | | | | | | | |
| 31 | | | | | | | | | | | | |
| Totals | 0.00 | 3.40 | 6.50 | 0.24 | 0.31 | 5.05 | 5.27 | 0.21 | 0.01 | 0.00 | 0.00 | 0.00 |
| | | | | | | | | | | Water Year Total: | | 20.99 |

NOTE: All Values are in units of inches, unless otherwise specified.

LEGEND: A - Acculated Total
E - Estimated
T - Trace, unmeasurable amount of rain

# PRECIPITATION

## DAILY RAINFALL SUMMARY

**93C Claremont-Police Station**

Gage Type: Standard Gage

Observation Time: Figures are for a 24-hour period

Latitude 34-05-45 Longitude: 117-43-18 Elevation: 1170 Feet

Water Year from 10/01/2019 to 09/30/2020

| Day | Oct | Nov | Dec | Jan | Feb | Mar | Apr | May | Jun | Jul | Aug | Sep |
|---|---|---|---|---|---|---|---|---|---|---|---|---|
| 1 | | | | | | | | | | | | |
| 2 | | | | | | | | | | | | |
| 3 | | | | | | | | | | | | |
| 4 | | | 1.20 | | | | | | | | | |
| 5 | | | A | | | | A | | 0.03 | | | |
| 6 | | | 0.07A | | | | 1.41A | | 0.03 | | | |
| 7 | | | A | | | | 0.45 | | | | | |
| 8 | | | 0.50A | | | | 0.47 | | | | | |
| 9 | | | | | | | 0.63 | | | | | |
| 10 | | | | | | 0.57 | 0.59 | | | | | |
| 11 | | | | | | 0.30 | | | | | | |
| 12 | | | | | | 1.01 | 0.02 | | | | | |
| 13 | | | | | | 0.58 | 0.24 | | | | | |
| 14 | | | 0.01 | | | 0.02E | | | | | | |
| 15 | | | 0.04 | | | 0.08E | | | | | | |
| 16 | | | | | | 0.03E | | | | | | |
| 17 | | | | 0.15 | | 0.43E | | | | | | |
| 18 | | | | | | | | 0.20 | | | | |
| 19 | | | | | | 0.30 | | | | | | |
| 20 | | 0.38 | | | | 0.40 | | | | | | |
| 21 | | 0.01 | | | | | | | | | | |
| 22 | | | | | 0.02 | | | | | | | |
| 23 | | | 0.98 | | 0.08 | 0.97 | | | | | | |
| 24 | | | 0.09 | | | | | | | | | |
| 25 | | | 0.04 | | | | | | | | | |
| 26 | | | 2.49 | | | | | | | | | |
| 27 | | 0.53 | | | | | | | | | | |
| 28 | | 1.72 | | | | | | | | | | |
| 29 | | 0.53 | | | | | | | | | | |
| 30 | | 0.02 | | | | | | | | | | |
| 31 | | | | | | | | | | | | |
| Totals | 0.00 | 3.19 | 5.42 | 0.15 | 0.10 | 4.69 | 3.81 | 0.20 | 0.06 | 0.00 | 0.00 | 0.00 |
| | | | | | | | | | | Water Year Total: | | 17.62 |

NOTE: All Values are in units of inches, unless otherwise specified.

LEGEND: A - Acculated Total
E - Estimated
T - Trace, unmeasurable amount of rain

# PRECIPITATION

## DAILY RAINFALL SUMMARY

**96C Puddingstone Dam**

Gage Type: Standard Gage

Observation Time: Figures are for a 24-hour period

Latitude 34-05-31 Longitude: 117-48-24 Elevation: 1030 Feet

Water Year from 10/01/2019 to 09/30/2020

| Day | Oct | Nov | Dec | Jan | Feb | Mar | Apr | May | Jun | Jul | Aug | Sep |
|---|---|---|---|---|---|---|---|---|---|---|---|---|
| 1 | | | T | | | | | | | | | |
| 2 | | | T | | | 0.12 | | | | | | |
| 3 | | | | | | | | | | | | |
| 4 | | | 0.32 | | | | | | | | | |
| 5 | | | 1.22 | | | | | | 0.02 | | | |
| 6 | | | | | | | 0.75E | | | | | |
| 7 | | | 0.11 | | | | 1.00 | | | | | |
| 8 | | | 0.10 | | | | 0.70 | | | | | |
| 9 | | | 0.17 | | T | | 0.12 | | | | | |
| 10 | | | T | | | 0.35 | 0.82 | | | | | |
| 11 | | | | | | 0.24 | 0.07 | | | | | |
| 12 | | | | | | | | | | | | |
| 13 | | | | | | 1.62 | 0.25 | | | | | |
| 14 | | | T | | | 0.20 | 0.02 | | | | | |
| 15 | | | T | | | 0.02 | | | | | | |
| 16 | | | | | | 0.05 | | | | | | |
| 17 | | | | 0.19 | | 0.56 | | | | | | |
| 18 | | | | | | | | | | | | |
| 19 | | | | | | | | 0.31 | | | | |
| 20 | | 0.06 | | | | 0.68 | | | | | | |
| 21 | | 0.78 | | | | | | | | | | |
| 22 | | | | | | | | | | | | |
| 23 | | | 0.65 | | 0.11 | 0.86 | | | | | | |
| 24 | | | 0.35 | | | | | | | | | |
| 25 | | | | | | | | | | | | |
| 26 | | | 2.41 | | | | | | | | | |
| 27 | | | T | | | | | | | | | |
| 28 | | 0.76 | | | | | | | | | | |
| 29 | | 1.47 | | | | | | | 0.02 | | | |
| 30 | | T | | | | | | | | | | |
| 31 | | | | | | | | | | | | |
| Totals | 0.00 | 3.07 | 5.33 | 0.19 | 0.11 | 4.70 | 3.73 | 0.31 | 0.04 | 0.00 | 0.00 | 0.00 |

Water Year Total: 17.48

NOTE: All Values are in units of inches, unless otherwise specified.

LEGEND: A - Acculated Total
E - Estimated
T - Trace, unmeasurable amount of rain

# PRECIPITATION

## DAILY RAINFALL SUMMARY

**125B San Francisquito Canyon Ph#1 - Saugus**

Gage Type: Standard Gage

Observation Time: Figures are for a 24-hour period

Latitude 34-35-25 Longitude: 118-27-15 Elevation: 2105 Feet

Water Year from 10/01/2019 to 09/30/2020

| Day | Oct | Nov | Dec | Jan | Feb | Mar | Apr | May | Jun | Jul | Aug | Sep |
|---|---|---|---|---|---|---|---|---|---|---|---|---|
| 1 | | | 0.15 | | | 0.01 | | | | | | |
| 2 | | | | | | 0.01 | | | | | | |
| 3 | | | | | | | | | | | | |
| 4 | | | 0.76 | | | | | | | | | |
| 5 | | | 0.32 | | | | | | | | | |
| 6 | | | 0.02 | | | | 1.96 | | | | | |
| 7 | | | 0.15 | | | | 0.13 | | | | | |
| 8 | | | 1.17 | | | 0.03 | 0.46 | | | | | |
| 9 | | | 0.39 | 0.05 | | | 0.59 | | | | | |
| 10 | | | | | | 0.20 | 0.49 | | | | | |
| 11 | | | | | | 0.14 | 0.08 | | | | | |
| 12 | | | | | | 0.03 | | | | | | |
| 13 | | | | | | 2.02 | 0.25 | | | | | |
| 14 | | | | | | 0.28 | | | | | | |
| 15 | | | | | | 0.54 | | | | | | |
| 16 | | | | | | 0.02 | | | | | | |
| 17 | | | | 0.46 | | 1.20 | | | | | | |
| 18 | | | | | | 0.02 | | 0.37 | | | | |
| 19 | | | | | | 0.01 | | 0.02 | | | | |
| 20 | | 0.14 | | | | 0.28 | | | | | | |
| 21 | | 0.06 | | 0.04 | | 0.01 | | | | | | |
| 22 | | | | | 0.02 | | | | | | | |
| 23 | | | 0.58 | | 0.14 | 0.73 | | | | | | |
| 24 | | | 0.03 | | | 0.12 | | | | | | |
| 25 | | | 0.05 | | | 0.02 | | | | | | |
| 26 | | | 1.87 | | | 0.03 | | | | | | |
| 27 | | 0.87 | 0.18 | | | 0.10 | | | | | | |
| 28 | | 1.21 | | | | 0.01 | | | | | | |
| 29 | | 0.28 | | | | | | | | | | |
| 30 | | 0.05 | 0.02 | | | | | | | | | |
| 31 | | | | | | | | | | | | |
| Totals | 0.00 | 2.61 | 5.69 | 0.55 | 0.16 | 5.81 | 3.96 | 0.39 | 0.00 | 0.00 | 0.00 | 0.00 |
| | | | | | | | | | | Water Year Total: | | 19.17 |

NOTE: All Values are in units of inches, unless otherwise specified.

LEGEND: A - Acculated Total
E - Estimated
T - Trace, unmeasurable amount of rain

# PRECIPITATION

## DAILY RAINFALL SUMMARY

**134C Puddingstone Diversion**

Gage Type: Standard Gage

Observation Time: Figures are for a 24-hour period

Latitude 34-07-52 Longitude: 117-46-55 Elevation: 1160 Feet

Water Year from 10/01/2019 to 09/30/2020

| Day | Oct | Nov | Dec | Jan | Feb | Mar | Apr | May | Jun | Jul | Aug | Sep |
|---|---|---|---|---|---|---|---|---|---|---|---|---|
| 1 | | | | | | | | | | | | |
| 2 | | | 0.02 | | | 0.14 | | | | | | |
| 3 | | | | | | | | | | | | |
| 4 | | | 0.33 | | | | | | | | | |
| 5 | | | 1.38 | | | | | | 0.01 | | | |
| 6 | | | | | | | 0.85 | | 0.08E | | | |
| 7 | | | A | | | | 1.75 | | | | | |
| 8 | | | A | | | | 0.83 | | | | | |
| 9 | | | 0.43A | | | | 0.12 | | | | | |
| 10 | | | | | 0.01 | 0.28 | 0.80 | | | | | |
| 11 | | | | | | 0.24 | A | | | | | |
| 12 | | | | | | | | | | | | |
| 13 | | | | | | 1.62 | A | | | | | |
| 14 | | | | | | A | 0.47A | | | | | |
| 15 | | | | | | | | | | | | |
| 16 | | | | | | 0.21A | | | | | | |
| 17 | | | | 0.19 | | 0.39 | | | T | | | |
| 18 | | | | | | T | | | | | | |
| 19 | | | | | | T | | 0.20 | | | | |
| 20 | | 0.07 | | | | 0.67 | | | | | | |
| 21 | | 0.42 | | T | | | | | | | | |
| 22 | | | | | | | | | | | | |
| 23 | | | 0.54 | | 0.33 | 0.77 | | | | | | |
| 24 | | | 0.27 | | | T | | | | | | |
| 25 | | | 0.16 | | | | | | | | | |
| 26 | | | 2.89 | | | | | | | | | |
| 27 | | 0.02 | T | | | | | | | | | |
| 28 | | 0.92 | | | | | | | | | | |
| 29 | | 1.41 | | | | | | | | | | |
| 30 | | | | | | | | | | | | |
| 31 | | | | | | | | | | | | |
| Totals | 0.00 | 2.84 | 6.02 | 0.19 | 0.34 | 4.32 | 4.82 | 0.20 | 0.09 | 0.00 | 0.00 | 0.00 |

Water Year Total: 18.82

NOTE: All Values are in units of inches, unless otherwise specified.

LEGEND: A - Acculated Total
E - Estimated
T - Trace, unmeasurable amount of rain

# PRECIPITATION

## DAILY RAINFALL SUMMARY

**144 Sierra Madre Dam**

Gage Type: Standard Gage

Observation Time: Figures are for a 24-hour period

Latitude 34-10-34 Longitude: 118-02-32 Elevation: 1100 Feet

Water Year from 10/01/2019 to 09/30/2020

| Day | Oct | Nov | Dec | Jan | Feb | Mar | Apr | May | Jun | Jul | Aug | Sep |
|---|---|---|---|---|---|---|---|---|---|---|---|---|
| 1 | | | | | | A | | | | | | |
| 2 | | | | | | 0.18A | | | | | | |
| 3 | | | | | | | | | | | | |
| 4 | | | 0.42 | | | | | | | | | |
| 5 | | | 1.13 | | | | 0.40 | | | | | |
| 6 | | | | | | | 2.07 | | 0.04E | | | |
| 7 | | | 0.18 | | | | 0.94 | | | | | |
| 8 | | | 0.23 | | | | 0.95 | | | | | |
| 9 | | | 0.18 | | | | 0.34 | | | | | |
| 10 | | | | | 0.55 | 0.21 | 0.89 | | | | | |
| 11 | | | | | | 0.24 | 0.07 | | | | | |
| 12 | | | | | | | | | | | | |
| 13 | | | | | | 1.69 | 0.62 | | | | | |
| 14 | | | | | | 0.58 | | | | | | |
| 15 | | | | | | 0.22 | | | | | | |
| 16 | | | | | | 0.02 | | | | | | |
| 17 | | | | 0.21 | | 1.04 | | | | | | |
| 18 | | | | | | 0.02 | | | | | | |
| 19 | | | | | | | | 0.24 | | | | |
| 20 | | | | | | 0.30 | | | | | | |
| 21 | | 0.51 | | | | | | | | | | |
| 22 | | | | | 0.05 | | | | | | | |
| 23 | | | 0.82 | | 0.07 | 0.80 | | | | | | |
| 24 | | | 0.36 | | | 0.01 | | | | | | |
| 25 | | | 0.04 | | | | | | | | | |
| 26 | | | 2.31 | | | | | | | | | |
| 27 | | | | | | | | | | | | |
| 28 | | 1.83 | | | | | | | | | | |
| 29 | | 0.62 | | | | | | | | | | |
| 30 | | | | | | | | | | | | |
| 31 | | | | | | | | | | | | |
| Totals | 0.00 | 2.96 | 5.67 | 0.21 | 0.67 | 5.31 | 6.28 | 0.24 | 0.04 | 0.00 | 0.00 | 0.00 |
| | | | | | | | | | | Water Year Total: | | 21.38 |

NOTE: All Values are in units of inches, unless otherwise specified.

LEGEND: A - Acculated Total
E - Estimated
T - Trace, unmeasurable amount of rain

# PRECIPITATION

## DAILY RAINFALL SUMMARY

**169 Sierra Madre Pumping Plant**

Gage Type: Standard Gage Observation Time: Figures are for a 24-hour period

Latitude 34-09-47 Longitude: 118-02-21 Elevation: 700 Feet

Water Year from 10/01/2019 to 09/30/2020

| Day | Oct | Nov | Dec | Jan | Feb | Mar | Apr | May | Jun | Jul | Aug | Sep |
|---|---|---|---|---|---|---|---|---|---|---|---|---|
| 1 | | | | | | | | | | | | |
| 2 | | | | | | 0.19 | | | | | | |
| 3 | | | | | | | | | | | | |
| 4 | | | 0.34 | | | | | | | | | |
| 5 | | | 1.32 | | | | 0.30 | | | | | |
| 6 | | | | | | | 1.73 | | 0.10 | | | |
| 7 | | | 0.17 | | | | 0.96 | | | | | |
| 8 | | | 0.19 | | | | 0.74 | | | | | |
| 9 | | | 0.21 | | | | 0.23 | | | | | |
| 10 | | | | | 0.35 | 0.16 | 0.78 | | | | | |
| 11 | | | | | | 0.19 | 0.05 | | | | | |
| 12 | | | | | | | | | | | | |
| 13 | | | | | | 1.71 | 0.40 | | | | | |
| 14 | | | | | | 0.42 | | | | | | |
| 15 | | | | | | 0.13 | | | | | | |
| 16 | | | | | | 0.02 | | | | | | |
| 17 | | | | 0.12 | | 0.87 | | | | | | |
| 18 | | | | | | 0.02 | | | | | | |
| 19 | | | | | | | | 0.22 | | | | |
| 20 | | | | | | 0.23 | | | | | | |
| 21 | | 0.45 | | | | | | | | | | |
| 22 | | | | | 0.02 | | | | | | | |
| 23 | | | 0.79 | | 0.04 | 0.62 | | | | | | |
| 24 | | | 0.37 | | | 0.01 | | | | | | |
| 25 | | | 0.02 | | | | | | | | | |
| 26 | | | 2.00 | | | | | | | | | |
| 27 | | | | | | | | | | | | |
| 28 | | 1.71 | | | | | | | | | | |
| 29 | | 0.57 | | | | | | | | | | |
| 30 | | | | | | | | | | | | |
| 31 | | | | | | | | | | | | |
| Totals | 0.00 | 2.73 | 5.41 | 0.12 | 0.41 | 4.57 | 5.19 | 0.22 | 0.10 | 0.00 | 0.00 | 0.00 |
| | | | | | | | | | | Water Year Total: | | 18.75 |

NOTE: All Values are in units of inches, unless otherwise specified.

LEGEND: A - Acculated Total
E - Estimated
T - Trace, unmeasurable amount of rain

# PRECIPITATION

## DAILY RAINFALL SUMMARY

**175B La Canada Irrigation District**

Gage Type: Standard Gage

Observation Time: Figures are for a 24-hour period

Latitude 34-13-39 Longitude: 118-12-40 Elevation: 2020 Feet

Water Year from 10/01/2019 to 09/30/2020

| Day | Oct | Nov | Dec | Jan | Feb | Mar | Apr | May | Jun | Jul | Aug | Sep |
|---|---|---|---|---|---|---|---|---|---|---|---|---|
| 1 | | | 0.06 | | | 0.05 | | | | | | |
| 2 | | | | | | 0.02 | T | | | | | |
| 3 | | | | | | | | | | | | |
| 4 | | | 0.52 | | | | | | | | | |
| 5 | | | 0.76 | | | | 0.16 | | T | | | |
| 6 | | | | | | | 3.17 | | 0.14 | | | |
| 7 | | | 0.33 | | | | 0.39 | | | | | |
| 8 | | | 0.33 | | | | 1.29 | | | | | |
| 9 | | | 0.41 | | | | 0.32 | | | | | |
| 10 | | | | | 0.19 | 0.20 | 0.82 | | | | | |
| 11 | | | | | | 0.24 | 0.09 | | | | | |
| 12 | | | | | | | | | | | | |
| 13 | | | | | | 2.00 | 0.64 | | | | | |
| 14 | | | | | | 0.50 | | | | | | |
| 15 | | | | | | 0.40 | | | | | | |
| 16 | | | | | | 0.01 | | | | | | |
| 17 | | | | 0.35 | | 1.03 | | | | | | |
| 18 | | | | | | T | | T | | | | |
| 19 | | | | | | 0.17 | T | 0.55 | | | | |
| 20 | | | | | | 0.09 | | | | | | |
| 21 | | | | | | | | | | | | |
| 22 | | | | | T | | | | | | | |
| 23 | | | 1.30 | | 0.12 | 1.18 | | | | | | |
| 24 | | | 0.08 | | | | | | | | | |
| 25 | | | | | | | | | | | | |
| 26 | | | 2.28 | | | | | | | | | |
| 27 | | A | T | | | | | | | | | |
| 28 | | 1.60A | | | | | | | | | | |
| 29 | | 0.46 | | | | | | | | | | |
| 30 | | | | | | | | | | | | E |
| 31 | | | | | | | | | | | E | |
| Totals | 0.00 | 2.06 | 6.07 | 0.35 | 0.31 | 5.89 | 6.88 | 0.55 | 0.14 | 0.00 | 0.00 | 0.00 |
| | | | | | | | | | | | Water Year Total: | 22.25 |

NOTE: All Values are in units of inches, unless otherwise specified.

LEGEND: A - Acculated Total
E - Estimated
T - Trace, unmeasurable amount of rain

# PRECIPITATION

## DAILY RAINFALL SUMMARY

**176 Altadena-Rubio Canyon**

Gage Type: Standard Gage

Observation Time: Figures are for a 24-hour period

Latitude 34-10-55 Longitude: 118-08-15 Elevation: 1125 Feet

Water Year from 10/01/2019 to 09/30/2020

| Day | Oct | Nov | Dec | Jan | Feb | Mar | Apr | May | Jun | Jul | Aug | Sep |
|---|---|---|---|---|---|---|---|---|---|---|---|---|
| 1 | | | | | | 0.04 | | | | | | |
| 2 | | T | | | | | | | | | | |
| 3 | | | | | | | | | | | | |
| 4 | | | 0.48 | | | | | | | | | |
| 5 | | | 0.68 | | | | 0.21 | | | | | |
| 6 | | | 0.10 | | | | 1.90 | | | | | |
| 7 | | | 0.17 | | | | 0.75 | | | | | |
| 8 | | | 0.16 | | | | 1.02 | | | | | |
| 9 | | | 0.43 | | | | 0.27 | | | | | |
| 10 | | | | | 0.09 | 0.23 | 0.71 | | | | | |
| 11 | | | | | | 0.20 | 0.09 | | | | | |
| 12 | | | | | | T | 0.01 | | | | | |
| 13 | | | | | | 1.60 | 0.34 | | | | | |
| 14 | | | 0.02 | | | 0.19 | | | | | | |
| 15 | | | | | | 0.27 | | | | | | |
| 16 | | | | 0.23 | | T | | | | | | |
| 17 | | | | | | 1.06 | | | | | | |
| 18 | | | | | | | | 0.30 | | | | |
| 19 | | | | | | | | | | | | |
| 20 | | | | | | | | | | | | |
| 21 | | 0.15 | | T | | | | | | | | |
| 22 | | | | | | | | | | | | |
| 23 | | | 1.16 | | T | 1.00 | | | | | | |
| 24 | | | 0.21E | | | | | | | | | |
| 25 | | | | | | | | | | | | |
| 26 | | | 2.49E | | | | | | | | | |
| 27 | | 0.03 | | | | | | | | | | |
| 28 | | 1.53 | | | | | | | | | | |
| 29 | | 0.90 | | | | | | | | | | |
| 30 | | | | | | | | | | | | |
| 31 | | | | | | | | | | | | |
| Totals | 0.00 | 2.61 | 5.90 | 0.23 | 0.09 | 4.59 | 5.30 | 0.30 | 0.00 | 0.00 | 0.00 | 0.00 |
| | | | | | | | | | | Water Year Total: | | 19.02 |

NOTE: All Values are in units of inches, unless otherwise specified.

LEGEND: A - Acculated Total
E - Estimated
T - Trace, unmeasurable amount of rain

# PRECIPITATION

## DAILY RAINFALL SUMMARY

**216C Glendale - Jackson**

Gage Type: Standard Private

Observation Time: Figures are for a 24-hour period

Latitude 34-09-54 Longitude: 118-15-01 Elevation: 615 Feet

Water Year from 10/01/2019 to 09/30/2020

| Day | Oct | Nov | Dec | Jan | Feb | Mar | Apr | May | Jun | Jul | Aug | Sep |
|---|---|---|---|---|---|---|---|---|---|---|---|---|
| 1 | | | | | | 0.01 | | | | | | |
| 2 | | | | | | | | | | | | |
| 3 | | | | | | | | | | | | |
| 4 | | | 1.05 | | | | | | | | | |
| 5 | | | 0.08 | | | | 0.04 | | | | | |
| 6 | | | | | | | 2.18 | | | | | |
| 7 | | | 0.08 | | | | 0.06 | | | | | |
| 8 | | | 0.99 | | | | 1.21 | | | | | |
| 9 | | | | | 0.12 | | 0.66 | | | | | |
| 10 | | | | | | 0.42 | 0.48 | | | | | |
| 11 | | | | | | 0.08 | | | | | | |
| 12 | | | | | | 1.56 | | | | | | |
| 13 | | | | | | 0.78 | 0.27 | | | | | |
| 14 | | | | | | 0.36 | | | | | | |
| 15 | | | | | | 0.08 | | | | | | |
| 16 | | | | | | 0.50 | | | | | | |
| 17 | | | | 0.21 | | 0.14 | | | | | | |
| 18 | | | | | | | | 0.33 | | | | |
| 19 | | | | | | | | | | | | |
| 20 | | 0.14 | | | | | | | | | | |
| 21 | | | | 0.01 | | | | | | | | |
| 22 | | | | | | | | | | | | |
| 23 | | | 1.30E | | 0.02 | 1.15 | | | | | | |
| 24 | | | | | | | | | | | | |
| 25 | | | 0.01E | | | | | | | | | |
| 26 | | | 2.12E | | | | | | | | | |
| 27 | | A | | | | | | | | | | |
| 28 | | A | | | | | | | | | | |
| 29 | | A | | | | | | | | | | |
| 30 | | 1.71A | | | | | | | | | | |
| 31 | | | | | | | | | | | | |
| Totals | 0.00 | 1.85 | 5.63 | 0.22 | 0.14 | 5.08 | 4.90 | 0.33 | 0.00 | 0.00 | 0.00 | 0.00 |
| | | | | | | | | | | Water Year Total: | | 18.15 |

NOTE: All Values are in units of inches, unless otherwise specified.

LEGEND: A - Acculated Total
E - Estimated
T - Trace, unmeasurable amount of rain

# PRECIPITATION

## DAILY RAINFALL SUMMARY

**223C Big Dalton Dam**

Gage Type: Standard Gage

Observation Time: Figures are for a 24-hour period

Latitude 34-10-06 Longitude: 117-48-36 Elevation: 1587 Feet

Water Year from 10/01/2019 to 09/30/2020

| Day | Oct | Nov | Dec | Jan | Feb | Mar | Apr | May | Jun | Jul | Aug | Sep |
|---|---|---|---|---|---|---|---|---|---|---|---|---|
| 1 | | | 0.05 | | | 0.10 | | | | | | |
| 2 | | | | | | 0.32 | T | | | | | |
| 3 | | | | | 0.06E | | | | | | | |
| 4 | | | 0.43 | | | | | | | | | |
| 5 | | | 1.64 | | | | 0.11 | | T | | | |
| 6 | | | | | | | 1.48 | | 0.05 | | | |
| 7 | | | 0.35 | | | | 1.26 | | | | | |
| 8 | | | 0.35 | | | | 1.01 | | | | | |
| 9 | | | 0.21 | | T | | 0.22 | | | | | |
| 10 | | | | | 0.04 | 0.37 | 1.00 | | | | | |
| 11 | | | | | | 0.30 | 0.15 | | | | | |
| 12 | | | | | | T | 0.02 | | | | | |
| 13 | | | | | | 2.02 | 0.45 | | | | | |
| 14 | | | | | | 0.11 | 0.04 | | | | | |
| 15 | | | | | | 0.04 | | | | | | |
| 16 | | | | | | 0.10 | | | | | | |
| 17 | | | | 0.29 | | 0.51 | | | T | | | |
| 18 | | | | | | | | | T | | | |
| 19 | | | | | | T | | 0.20 | | | | |
| 20 | | 0.17 | | | | 0.61 | | | | | | |
| 21 | | 0.47 | | T | | | | | | | | |
| 22 | | | | T | 0.05 | | | | | | | |
| 23 | | | 0.70 | | 0.12 | 0.71 | | | | | | |
| 24 | | | 0.61 | | | | | | | | | |
| 25 | | | 0.14 | | | | | | | | | |
| 26 | | | 2.70 | | | | | | | | | |
| 27 | | 0.04 | 0.16 | | | | | | | | | |
| 28 | | 1.35 | | | | | | | | | | |
| 29 | | 1.60 | T | | | | | | | | | |
| 30 | | | | | | | | | | | | |
| 31 | | | | | | | | | | | | |
| Totals | 0.00 | 3.63 | 7.34 | 0.29 | 0.27 | 5.19 | 5.74 | 0.20 | 0.05 | 0.00 | 0.00 | 0.00 |
| | | | | | | | | | | Water Year Total: | | 22.71 |

NOTE: All Values are in units of inches, unless otherwise specified.

LEGEND: A - Acculated Total
E - Estimated
T - Trace, unmeasurable amount of rain

# PRECIPITATION

## DAILY RAINFALL SUMMARY

**225 Montana Ranch-Lakewood**

Gage Type: Standard Gage

Observation Time: Figures are for a 24-hour period

Latitude 33-50-35 Longitude: 118-07-09 Elevation: 47 Feet

Water Year from 10/01/2019 to 09/30/2020

| Day | Oct | Nov | Dec | Jan | Feb | Mar | Apr | May | Jun | Jul | Aug | Sep |
|---|---|---|---|---|---|---|---|---|---|---|---|---|
| 1 | | | 0.12 | | | | | | | | | |
| 2 | | | | | | | | | | | | |
| 3 | | | 0.15 | | | | | | | | | |
| 4 | | | 0.73 | | | | | | | | | |
| 5 | | | | | | | 0.46 | | | | | |
| 6 | | | | | | | 0.60 | | | | | |
| 7 | | | 0.12 | | | | 0.80 | | | | | |
| 8 | | | 0.07 | | | | 0.19 | | | | | |
| 9 | | | | | | 0.15 | 1.47 | | | | | |
| 10 | | | | | 0.25 | 0.07 | | | | | | |
| 11 | | | | | 0.20E | | | | | | | |
| 12 | | | | | | 1.65 | | | | | | |
| 13 | | | | | | | | | | | | |
| 14 | | | | | | 0.09 | | | | | | |
| 15 | | | | 0.08 | | | | | | | | |
| 16 | | | | | | 0.32 | | | | | | |
| 17 | | | | | | | | | | | | |
| 18 | | | | | | | | 0.09 | | | | |
| 19 | | 0.05 | | | | 0.08 | | | | | | |
| 20 | | 0.56 | | 0.08 | | | | | | | | |
| 21 | | | | | | | | | | | | |
| 22 | | | | | | 0.81 | | | | | | |
| 23 | | | 1.51 | | | | | | | | | |
| 24 | | | | | | | | | | | | |
| 25 | | | | | | | | | | | | |
| 26 | | | 2.85 | | | | | | | | | |
| 27 | | 0.27 | | | | | | | | | | |
| 28 | | A | | | | | | | | | | |
| 29 | | 2.39A | | | | | | | | | | |
| 30 | | | | | | | | | | | | E |
| 31 | | | | | | | | | | E | E | |
| Totals | 0.00 | 3.27 | 5.55 | 0.16 | 0.45 | 3.17 | 3.52 | 0.09 | 0.00 | 0.00 | 0.00 | 0.00 |
| | | | | | | | | | | Water Year Total: | | 16.21 |

NOTE: All Values are in units of inches, unless otherwise specified.

LEGEND: A - Acculated Total
E - Estimated
T - Trace, unmeasurable amount of rain

# PRECIPITATION

## DAILY RAINFALL SUMMARY

**228C Beverly Hills City Hall**

Gage Type: Standard Gage

Observation Time: Figures are for a 24-hour period

Latitude 34-06-00 Longitude: 118-23-40 Elevation: 245 Feet

Water Year from 10/01/2019 to 09/30/2020

| Day | Oct | Nov | Dec | Jan | Feb | Mar | Apr | May | Jun | Jul | Aug | Sep |
|---|---|---|---|---|---|---|---|---|---|---|---|---|
| 1 | | | | | | | | | | | | |
| 2 | | | | | | | | | | | | |
| 3 | | 0.01 | 0.79 | | | | | | | | | |
| 4 | | | 0.30 | | | | | | | | | |
| 5 | | | | | | | | | | | | |
| 6 | | | | | | | 1.28 | | | | | |
| 7 | | | 0.15 | | | | A | | | | | |
| 8 | | | 0.02 | | | | A | | | | | |
| 9 | | | 0.08 | | 0.18 | 0.16 | A | | | | | |
| 10 | | | | | | 0.04 | 1.54A | | | | | |
| 11 | | | | | | | 0.02 | | | | | |
| 12 | | | | | | 1.90 | | | | | | |
| 13 | | | | | | 1.06 | 0.01 | | | | | |
| 14 | | | | | | 0.19 | | | | | | |
| 15 | | | | | | | | | | | | |
| 16 | | | | | | 0.04 | | | | | | |
| 17 | | | | 0.28 | | 0.03 | | | | | | |
| 18 | | | | | | | | 0.10 | | | | |
| 19 | | | | | | | | | | | | |
| 20 | | 0.02 | | 0.02 | | | | | | | | |
| 21 | | 0.09 | | | | 1.20 | | | | | | |
| 22 | | | 1.80E | | | | | | | | | |
| 23 | | | | | | | | | | | | |
| 24 | | | | | | | | | | | | |
| 25 | | | 1.47 | | | | | | | | | |
| 26 | | | | | | | | | | | | |
| 27 | | | | | | | | | | | | |
| 28 | | 1.06 | | | | | | | | | | |
| 29 | | 0.54 | | | | | | | | | | |
| 30 | | | | | | | | | | | | |
| 31 | | | | | | | | | | | | |
| Totals | 0.00 | 1.72 | 4.61 | 0.30 | 0.18 | 4.62 | 2.85 | 0.10 | 0.00 | 0.00 | 0.00 | 0.00 |
| | | | | | | | | | | Water Year Total: | | 14.38 |

NOTE: All Values are in units of inches, unless otherwise specified.

LEGEND: A - Acculated Total
E - Estimated
T - Trace, unmeasurable amount of rain

# PRECIPITATION

## DAILY RAINFALL SUMMARY

**251C La Crescenta**

Gage Type: Standard Gage

Observation Time: Figures are for a 24-hour period

Latitude 34-13-20 Longitude: 118-14-40 Elevation: 1440 Feet

Water Year from 10/01/2019 to 09/30/2020

| Day | Oct | Nov | Dec | Jan | Feb | Mar | Apr | May | Jun | Jul | Aug | Sep |
|---|---|---|---|---|---|---|---|---|---|---|---|---|
| 1 | | | A | | | | | | | | | |
| 2 | | | | | | | | | | | | |
| 3 | | | | | | | | | | | | |
| 4 | | | 1.05A | | | | | | | | | |
| 5 | | | 0.21 | | | | 2.37 | | 0.02 | | | |
| 6 | | | 0.06 | | | | 0.13 | | 0.02 | | | |
| 7 | | | A | | | | 0.34 | | | | | |
| 8 | | | 0.99A | | | | 1.15 | | | | | |
| 9 | | | | | 0.24 | | 0.69 | | | | | |
| 10 | | | | | | 0.44 | 0.47 | | | | | |
| 11 | | | | | | 0.17 | A | | | | | |
| 12 | | | | | | 0.86 | A | | | | | |
| 13 | | | | | | 1.67 | 0.44A | | | | | |
| 14 | | | | | | 0.45 | | | | | | |
| 15 | | | | A | | | | | | | | |
| 16 | | | | | | 0.09 | | | | | | |
| 17 | | | | 0.26A | | 0.80 | | | | | | |
| 18 | | | | | | 0.21 | | 0.50 | | | | |
| 19 | | | | | | | | | | | | |
| 20 | | 0.10 | | | | | | | | | | |
| 21 | | | | | | | | | | | | |
| 22 | | | | | 0.05 | | | | | | | |
| 23 | | | 1.23E | | | 1.20 | | | | | | |
| 24 | | | 0.03E | | | | | | | | | |
| 25 | | | 0.17E | | | 0.01 | | | | | | |
| 26 | | | 2.23E | | | | | | | | | |
| 27 | | 0.64 | | | | | | | | | | |
| 28 | | A | | | | | | | | | | |
| 29 | | A | | | 0.02 | | | | | | | |
| 30 | | 1.21A | | | | | | | | | | |
| 31 | | | | | | | | | | | | |
| Totals | 0.00 | 1.95 | 5.97 | 0.26 | 0.31 | 5.90 | 5.59 | 0.50 | 0.04 | 0.00 | 0.00 | 0.00 |
| | | | | | | | | | | Water Year Total: | | 20.52 |

NOTE: All Values are in units of inches, unless otherwise specified.

LEGEND: A - Acculated Total
E - Estimated
T - Trace, unmeasurable amount of rain

# PRECIPITATION

## DAILY RAINFALL SUMMARY

**252C Castaic Lake**

Gage Type: Standard Gage

Observation Time: Figures are for a 24-hour period

Latitude 34-29-53 Longitude: 118-36-53 Elevation: 1150 Feet

Water Year from 10/01/2019 to 09/30/2020

| Day | Oct | Nov | Dec | Jan | Feb | Mar | Apr | May | Jun | Jul | Aug | Sep |
|---|---|---|---|---|---|---|---|---|---|---|---|---|
| 1 | | | 0.16 | | | | | | | | | |
| 2 | | | 0.02 | | | | | | | | | |
| 3 | | | | | | | | | | | | |
| 4 | | | 1.10 | | | | | | | | | |
| 5 | | | 0.05 | | | | | | | | | |
| 6 | | | 0.01 | | | | 1.36 | | | | | |
| 7 | | | 0.25 | | | | 0.05 | | | | | |
| 8 | | | 0.10 | | | | 0.87 | | | | | |
| 9 | | | 0.49 | | | | 0.40 | | | | | |
| 10 | | | | 0.02 | | 0.09 | 0.84 | | | | | |
| 11 | | | | | | 0.57 | | | | | | |
| 12 | | | | | | 0.11 | | | | | | |
| 13 | | | | | | 1.82 | 0.05 | | | | | |
| 14 | | | | | | 0.04 | | | | | | |
| 15 | | | | | | 0.06 | | | | | | |
| 16 | | | | | | 0.01 | | | | | | |
| 17 | | | | 0.47 | | 0.60 | | | | | | |
| 18 | | | | | | | | 0.15 | | | | |
| 19 | | | | | | | | | | | | |
| 20 | | | | | | 0.09 | | | | | | |
| 21 | | 0.35 | | 0.08 | | | | | | | | |
| 22 | | | 0.95 | | 0.20 | | | | | | | |
| 23 | | | | | 0.09 | 1.09 | | | | | | |
| 24 | | | 0.08 | | | | | | | | | |
| 25 | | | | | | | | | | | | |
| 26 | | | 1.52 | | | | | | | | | |
| 27 | | 0.32 | 0.01 | | | 0.04 | | | | | | |
| 28 | | 0.97 | | | | | | | | | | |
| 29 | | 0.70 | | | | | | | | | | |
| 30 | | 0.05 | T | | | | | | | | | |
| 31 | | | | | | | | | | | | |
| Totals | 0.00 | 2.39 | 4.74 | 0.57 | 0.29 | 4.52 | 3.57 | 0.15 | 0.00 | 0.00 | 0.00 | 0.00 |
| | | | | | | | | | | Water Year Total: | | 16.23 |

NOTE: All Values are in units of inches, unless otherwise specified.

LEGEND: A - Acculated Total
E - Estimated
T - Trace, unmeasurable amount of rain

# PRECIPITATION

## DAILY RAINFALL SUMMARY

**287B Glendora-City Hall**

Gage Type: Standard Gage

Observation Time: Figures are for a 24-hour period

Latitude 34-08-09 Longitude: 117-51-52 Elevation: 785 Feet

Water Year from 10/01/2019 to 09/30/2020

| Day | Oct | Nov | Dec | Jan | Feb | Mar | Apr | May | Jun | Jul | Aug | Sep |
|---|---|---|---|---|---|---|---|---|---|---|---|---|
| 1 | | | | | | | | | | | | |
| 2 | | | | | | 0.15 | | | | | | |
| 3 | | | | | | | | | | | | |
| 4 | | | 0.35 | | | | | | | | | |
| 5 | | | 1.72 | | | | | | | | | |
| 6 | | | | | | | 0.82 | | 0.07 | | | |
| 7 | | | | | | | 1.41 | | | | | |
| 8 | | | | | | | 0.96 | | | | | |
| 9 | | | 0.51 | | | | 0.22 | | | | | |
| 10 | | | | | 0.25 | 0.25 | 0.81 | | | | | |
| 11 | | | | | | 0.30 | | | | | | |
| 12 | | | | | | | | | | | | |
| 13 | | | | | | 1.80 | 0.42 | | | | | |
| 14 | | | | | | | 0.05 | | | | | |
| 15 | | | | | | | | | | | | |
| 16 | | | | | | 0.26 | | | | | | |
| 17 | | | | 0.20 | | 0.46 | | | | | | |
| 18 | | | | | | | | | | | | |
| 19 | | | | | | 0.59 | | 0.23 | | | | |
| 20 | | 0.07 | | | | | | | | | | |
| 21 | | 0.54 | | 0.01 | | | | | | | | |
| 22 | | 0.11 | | | | 0.58 | | | | | | |
| 23 | | | 0.61 | | 0.28 | | | | | | | |
| 24 | | | 0.53E | | | | | | | | | |
| 25 | | | 0.07E | | | | | | | | | |
| 26 | | | 2.50E | | | | | | | | | |
| 27 | | 0.02 | 0.05 | | | | | | | | | |
| 28 | | 1.20E | | | | | | | | | | |
| 29 | | 1.60E | | | | | | | A | | | |
| 30 | | | | | | | | | 0.04A | | | |
| 31 | | | | | | | | | | | | |
| Totals | 0.00 | 3.54 | 6.34 | 0.21 | 0.53 | 4.39 | 4.69 | 0.23 | 0.11 | 0.00 | 0.00 | 0.00 |
| | | | | | | | | | | Water Year Total: | | 20.04 |

NOTE: All Values are in units of inches, unless otherwise specified.

LEGEND: A - Acculated Total
E - Estimated
T - Trace, unmeasurable amount of rain

# PRECIPITATION

## DAILY RAINFALL SUMMARY

**294B Sierra Madre-Mira Monte Pumping Plant**

Gage Type: Standard Gage Observation Time: Figures are for a 24-hour period

Latitude 34-10-11 Longitude: 118-02-51 Elevation: 985 Feet

Water Year from 10/01/2019 to 09/30/2020

| Day | Oct | Nov | Dec | Jan | Feb | Mar | Apr | May | Jun | Jul | Aug | Sep |
|---|---|---|---|---|---|---|---|---|---|---|---|---|
| 1 | | | | | | | | | | | | |
| 2 | | | | | | 0.22 | | | | | | |
| 3 | | | | | | | | | | | | |
| 4 | | | 0.39 | | | | | | | | | |
| 5 | | | 1.07 | | | | 0.33 | | | | | |
| 6 | | | | | | | 2.05 | | 0.18 | | | |
| 7 | | | 0.16 | | | | 0.86 | | | | | |
| 8 | | | 0.19 | | | | 0.80 | | | | | |
| 9 | | | 0.20 | | | | 0.31 | | | | | |
| 10 | | | | | 0.54 | 0.20 | 0.83 | | | | | |
| 11 | | | | | | 0.22 | 0.06 | | | | | |
| 12 | | | | | | | | | | | | |
| 13 | | | | | | 1.74 | 0.46 | | | | | |
| 14 | | | | | | 0.53 | | | | | | |
| 15 | | | | | | 0.20 | | | | | | |
| 16 | | | | | | 0.02 | | | | | | |
| 17 | | | | 0.20 | | 1.04 | | | | | | |
| 18 | | | | | | 0.02 | | | | | | |
| 19 | | | | | | | | 0.23 | | | | |
| 20 | | | | | | 0.29 | | | | | | |
| 21 | | 0.59 | | | | | | | | | | |
| 22 | | | | | 0.03 | | | | | | | |
| 23 | | | 0.92 | | 0.08 | 1.03 | | | | | | |
| 24 | | | 0.36 | | | 0.01 | | | | | | |
| 25 | | | 0.03 | | | | | | | | | |
| 26 | | | 2.43 | | | | | | | | | |
| 27 | | | | | | | | | | | | |
| 28 | | 1.85 | | | | | | | | | | |
| 29 | | 0.66 | | | | | | | | | | |
| 30 | | | | | | | | | | | | |
| 31 | | | | | | | | | | | | |
| Totals | 0.00 | 3.10 | 5.75 | 0.20 | 0.65 | 5.52 | 5.70 | 0.23 | 0.18 | 0.00 | 0.00 | 0.00 |
| | | | | | | | | | | Water Year Total: | | 21.33 |

NOTE: All Values are in units of inches, unless otherwise specified.

LEGEND: A - Acculated Total
E - Estimated
T - Trace, unmeasurable amount of rain

# PRECIPITATION

## DAILY RAINFALL SUMMARY

**322 Munz Valley Ranch**

Gage Type: Standard Private

Observation Time: Figures are for a 24-hour period

Latitude 34-42-50 Longitude: 118-21-15 Elevation: 2600 Feet

Water Year from 10/01/2019 to 09/30/2020

| Day | Oct | Nov | Dec | Jan | Feb | Mar | Apr | May | Jun | Jul | Aug | Sep |
|---|---|---|---|---|---|---|---|---|---|---|---|---|
| 1 | | | | | | | | | | | | |
| 2 | | | | | | | | | | | | |
| 3 | | | | | | | | | | | | |
| 4 | | | 0.97 | | | | | | | | | |
| 5 | | | 0.21 | | | | | | | | | |
| 6 | | | | | | | 1.08 | | | | | |
| 7 | | | 0.06 | | | | A | | | | | |
| 8 | | | 0.31 | | | | 0.77A | | | | | |
| 9 | | | | | | | 0.56 | | | | | |
| 10 | | | | | | 0.48 | 0.83 | | | | | |
| 11 | | | | | | 0.06 | | | | | | |
| 12 | | | | | | 0.17 | | | | | | |
| 13 | | | | | | 1.28 | | | | | | |
| 14 | | | | | | | | | | | | |
| 15 | | | | | | 0.12 | | | | | | |
| 16 | | | | | | 0.82 | | | | | | |
| 17 | | | | 0.18 | | | | | | | | |
| 18 | | | | | | | | | | | | |
| 19 | | | | | | | | | | | | |
| 20 | | 0.15E | | | | | | | | | | |
| 21 | | | | 0.04 | | | | | | | | |
| 22 | | | | | 0.04 | | | | | | | |
| 23 | | | 0.57 | | | 0.50 | | | | | | |
| 24 | | | | | | | | | | | | |
| 25 | | | | | | | | | | | | |
| 26 | | | 1.66E | | | 0.02 | | | | | | |
| 27 | | 0.60 | 0.92E | | | | | | | | | |
| 28 | | 1.23 | | | | | | | | | | |
| 29 | | 0.15 | | | | | | | | | | |
| 30 | | 0.20 | | | | | | | | | | |
| 31 | | | | | | | | | | | | |
| Totals | 0.00 | 2.33 | 4.70 | 0.22 | 0.04 | 3.45 | 3.24 | 0.00 | 0.00 | 0.00 | 0.00 | 0.00 |

Water Year Total: 13.98

NOTE: All Values are in units of inches, unless otherwise specified.

LEGEND: A - Acculated Total
E - Estimated
T - Trace, unmeasurable amount of rain

# PRECIPITATION

## DAILY RAINFALL SUMMARY

**334B Cogswell Dam**

Gage Type: Standard Gage

Observation Time: Figures are for a 24-hour period

Latitude 34-14-37 Longitude: 117-57-35 Elevation: 2300 Feet

Water Year from 10/01/2019 to 09/30/2020

| Day | Oct | Nov | Dec | Jan | Feb | Mar | Apr | May | Jun | Jul | Aug | Sep |
|---|---|---|---|---|---|---|---|---|---|---|---|---|
| 1 | | | 0.10 | | | 0.05 | | | | | | |
| 2 | | | | | | 0.43 | | | | | | |
| 3 | | | | | | | | | | | | |
| 4 | | | 0.52 | | | | | | | | | |
| 5 | | | 1.03 | | | | 0.11 | | | | | |
| 6 | | | | | | | 3.40 | | | | | |
| 7 | | | 0.47 | | | | 1.72 | | | | | |
| 8 | | | 0.25 | | | | 1.17 | | | | | |
| 9 | | | 0.76 | | 0.03 | | 0.67 | | | | | |
| 10 | | | | | | 0.52 | 0.90 | | | | | |
| 11 | | | | | | 0.80 | 0.09 | | | | | |
| 12 | | | | | | | | | | | | |
| 13 | | | | | | 1.48 | 0.07 | | | | | |
| 14 | | | | | | 0.20 | | | | | | |
| 15 | | | | | | 0.22 | | | | | | |
| 16 | | | | | | 0.08 | | | | | | |
| 17 | | | | 0.43 | | 2.55 | | | | | | |
| 18 | | | | | | | | | | | | |
| 19 | | | | | | 0.01 | | 0.19 | | | | |
| 20 | | 0.43 | | | | 0.45 | | | | | | |
| 21 | | 0.52 | | | | | | | | | | |
| 22 | | | | | T | | | | | | | |
| 23 | | | 1.34 | | 0.31 | 1.05 | | | | | | |
| 24 | | | 0.35 | | | | | | | | | |
| 25 | | | 0.09 | | | | | | | | | |
| 26 | | | 3.53 | | | | | | | | | |
| 27 | | 0.19 | 0.04 | | | T | | | | | | |
| 28 | | 2.31 | | | | | | | | | | |
| 29 | | 1.31 | | | | | | | | | | |
| 30 | | | | | | | | | | | | |
| 31 | | | | | | | | | | | | |
| Totals | 0.00 | 4.76 | 8.48 | 0.43 | 0.34 | 7.84 | 8.13 | 0.19 | 0.00 | 0.00 | 0.00 | 0.00 |
| | | | | | | | | | | Water Year Total: | | 30.17 |

NOTE: All Values are in units of inches, unless otherwise specified.

LEGEND: A - Acculated Total
E - Estimated
T - Trace, unmeasurable amount of rain

# PRECIPITATION

## DAILY RAINFALL SUMMARY

**372 San Francisquito Power House No.2**

Gage Type: Standard Gage

Observation Time: Figures are for a 24-hour period

Latitude 34-32-02 Longitude: 118-31-27 Elevation: 1580 Feet

Water Year from 10/01/2019 to 09/30/2020

| Day | Oct | Nov | Dec | Jan | Feb | Mar | Apr | May | Jun | Jul | Aug | Sep |
|---|---|---|---|---|---|---|---|---|---|---|---|---|
| 1 | | | 0.20 | | | | | | | | | |
| 2 | | | | | | | | | | | | |
| 3 | | | | | | | | | | | | |
| 4 | | | 0.04 | | | | | | | | | |
| 5 | | | 1.00 | | | | | | | | | |
| 6 | | | 0.32 | | | | 2.10 | | | | | |
| 7 | | | 0.32 | | | | 0.10 | | | | | |
| 8 | | | 0.65 | | | | 1.00 | | | | | |
| 9 | | | 0.10 | | | | 0.70 | | | | | |
| 10 | | | | | | 0.10 | 0.54 | | | | | |
| 11 | | | | | | 0.42 | 0.10 | | | | | |
| 12 | | | | | | 0.14 | | | | | | |
| 13 | | | | | | 2.40 | 0.30 | | | | | |
| 14 | | | | | | 0.27 | | | | | | |
| 15 | | | | | | 0.32 | | | | | | |
| 16 | | | | | | 0.08 | | | | | | |
| 17 | | | | 0.70 | | 0.85 | | | | | | |
| 18 | | | | | | | | 0.38 | | | | |
| 19 | | | | | | | | | | | | |
| 20 | | 0.20 | | | | 0.20 | | | | | | |
| 21 | | 0.10 | | 0.10 | | | | | | | | |
| 22 | | | | | 0.20 | | | | | | | |
| 23 | | | 0.85 | | 0.10 | 1.05 | | | | | | |
| 24 | | | 0.05 | | | 0.10 | | | | | | |
| 25 | | | 0.04 | | | | | | | | | |
| 26 | | | 2.30 | | | | | | | | | |
| 27 | | 1.00 | | | | 0.10 | | | | | | |
| 28 | | 1.30 | | | | | | | | | | |
| 29 | | 0.30 | | | | | | | | | | |
| 30 | | 0.10 | | | | | | | | | | |
| 31 | | | | | | | | | | | | |
| Totals | 0.00 | 3.00 | 5.87 | 0.80 | 0.30 | 6.03 | 4.84 | 0.38 | 0.00 | 0.00 | 0.00 | 0.00 |

Water Year Total: 21.22

NOTE: All Values are in units of inches, unless otherwise specified.

LEGEND: A - Acculated Total
E - Estimated
T - Trace, unmeasurable amount of rain

# PRECIPITATION

## DAILY RAINFALL SUMMARY

**373C Briggs Terrace**

Gage Type: Standard Private

Observation Time: Figures are for a 24-hour period

Latitude 34-14-17 Longitude: 118-13-27 Elevation: 2200 Feet

Water Year from 10/01/2019 to 09/30/2020

| Day | Oct | Nov | Dec | Jan | Feb | Mar | Apr | May | Jun | Jul | Aug | Sep |
|---|---|---|---|---|---|---|---|---|---|---|---|---|
| 1 | | | | | | 0.03 | | | | | | |
| 2 | | | | | | | 0.02 | | | | | |
| 3 | | | | | | | | | | | | |
| 4 | | | 1.17 | | | | | | | | | |
| 5 | | | 0.11 | | | | 0.38 | | 0.07 | | | |
| 6 | | | 0.33 | | | | 3.05 | | 0.08 | | | |
| 7 | | | 0.23 | | | | 0.61 | | | | | |
| 8 | | | 0.88 | | | | 0.93 | | | | | |
| 9 | | | 0.05 | | 0.03 | | 0.75 | | | | | |
| 10 | | | | | | 0.51 | 0.48 | | | | | |
| 11 | | | | | | 0.08 | 0.02 | | | | | |
| 12 | | | | | | 1.47 | 0.29 | | | | | |
| 13 | | | | | | 1.28 | | | | | | |
| 14 | | | | | | 0.37 | | | | | | |
| 15 | | | | | | 0.18 | | | | | | |
| 16 | | | | 0.29 | | 1.05 | | | | | | |
| 17 | | | | | | 0.21 | | | | | | |
| 18 | | | | | | | 0.04 | 0.52 | | | | |
| 19 | | | | | | 0.51 | | | | | | |
| 20 | | 0.15 | | | | | | | | | | |
| 21 | | 0.04 | | | | | | | | | | |
| 22 | | | 1.30 | | 0.12 | 0.22 | | | | | | |
| 23 | | | 0.25 | | 0.08 | 1.16 | | | | | | |
| 24 | | | 1.81 | | | | | | | | | |
| 25 | | | 0.90 | | | 0.01 | | | | | | |
| 26 | | | 0.20 | | | 0.07 | | | | | | |
| 27 | | 0.77 | | | | | | | | | | |
| 28 | | 1.03 | | | | | | | 0.02 | | | |
| 29 | | | | | | | | | | | | |
| 30 | | 0.25 | | | | 0.04 | | | | | | |
| 31 | | | | | | | | | | | | |
| Totals | 0.00 | 2.24 | 7.23 | 0.29 | 0.23 | 7.19 | 6.57 | 0.52 | 0.17 | 0.00 | 0.00 | 0.00 |
| | | | | | | | | | | Water Year Total: | | 24.44 |

NOTE: All Values are in units of inches, unless otherwise specified.

LEGEND: A - Acculated Total
E - Estimated
T - Trace, unmeasurable amount of rain

# PRECIPITATION

## DAILY RAINFALL SUMMARY

**387B Covina City Yard**

Gage Type: Standard Gage

Observation Time: Figures are for a 24-hour period

Latitude 34-05-02 Longitude: 117-53-57 Elevation: 508 Feet

Water Year from 10/01/2019 to 09/30/2020

| Day | Oct | Nov | Dec | Jan | Feb | Mar | Apr | May | Jun | Jul | Aug | Sep |
|---|---|---|---|---|---|---|---|---|---|---|---|---|
| 1 | | | 0.02 | | | 0.01 | | | | | | |
| 2 | | | | | | 0.01 | | | | | | |
| 3 | | | | | | | | | | | | |
| 4 | | | 1.03 | | | | | | | | | |
| 5 | | | 0.45 | | | | | | 0.02 | | | |
| 6 | | | | | | | | | 0.01 | | | |
| 7 | | | 0.18 | | | | 0.43 | | 0.01 | | | |
| 8 | | | 0.08 | | | | 0.63 | | | | | |
| 9 | | | | | | | 0.17 | | | | | |
| 10 | | | | | | 0.20 | 0.73 | | | | | |
| 11 | | | | | | 0.22 | 0.06 | | | | | |
| 12 | | | | | | 0.02 | | | | | | |
| 13 | | | | | | 1.75 | 0.13 | | | | | |
| 14 | | | | | | 0.22 | | | | | | |
| 15 | | | | | | 0.03 | | | | | | |
| 16 | | | | | | 0.04 | | | | | | |
| 17 | | | | 0.19E | | | | | | | | |
| 18 | | | | | | 0.35 | | | | | | |
| 19 | | | | | | | | 0.44 | | | | |
| 20 | | 0.22 | | | | 0.64 | | | | | | |
| 21 | | 0.68 | | 0.02 | | | | | | | | |
| 22 | | | | | | | | | | | | |
| 23 | | | A | | 0.01 | 0.66 | | | | | | |
| 24 | | | 0.66A | | | 0.02 | | | | | | |
| 25 | | | | | | | | | | | | |
| 26 | | | 2.11 | | | | | | | | | |
| 27 | | 0.02 | 0.02 | | | | | | | | | |
| 28 | | 0.91 | | | | | | | | | | |
| 29 | | 1.18 | | | | | | | | | | |
| 30 | | 0.01 | | | | | | | | | | |
| 31 | | | | | | | | | | | | |
| Totals | 0.00 | 3.02 | 4.55 | 0.21 | 0.01 | 4.17 | 2.15 | 0.44 | 0.04 | 0.00 | 0.00 | 0.00 |
| | | | | | | | | | | Water Year Total: | | 14.59 |

NOTE: All Values are in units of inches, unless otherwise specified.

LEGEND: A - Acculated Total
E - Estimated
T - Trace, unmeasurable amount of rain

# PRECIPITATION

## DAILY RAINFALL SUMMARY

**390B** **Morris Dam**

Gage Type: Standard Gage

Observation Time: Figures are for a 24-hour period

Latitude 34-10-53 Longitude: 117-52-43 Elevation: 1210 Feet

Water Year from 10/01/2019 to 09/30/2020

| Day | Oct | Nov | Dec | Jan | Feb | Mar | Apr | May | Jun | Jul | Aug | Sep |
|---|---|---|---|---|---|---|---|---|---|---|---|---|
| 1 | | | 0.02 | | | 0.08 | | | | | | |
| 2 | | | | | | 0.06 | | | | | | |
| 3 | | | | | | | | | | | | |
| 4 | | | 0.48 | | | | | | | | | |
| 5 | | | 1.00 | | | | 0.19 | | T | | | |
| 6 | | | 0.01 | | | | 2.06 | | 0.04 | | | |
| 7 | | | 0.34 | | | | 1.62 | | | | | |
| 8 | | | 0.26 | | | | 1.04 | | | | | |
| 9 | | | 0.19 | | 0.09 | | 0.46 | | | | | |
| 10 | | | T | | | 0.31 | 0.78 | | | | | |
| 11 | | | | | | 0.33 | 0.05 | | | | | |
| 12 | | | | | | | | | | | | |
| 13 | | | | | | 1.36 | 0.29 | | | | | |
| 14 | | | | | | 0.16 | 0.02 | | | | | |
| 15 | | | | | | 0.29 | | | | | | |
| 16 | | | | | | 0.03 | | | | | | |
| 17 | | | | 0.22 | | 0.65 | | | | | | |
| 18 | | | | | | 0.01 | | | | | | |
| 19 | | | | | | T | | 0.33 | | | | |
| 20 | | 0.28 | | | | 0.50 | | | | | | |
| 21 | | 0.69 | | 0.01 | | | | | | | | |
| 22 | | T | | | | | | | | | | |
| 23 | | | 0.59 | | 0.35 | 1.11 | | | | | | |
| 24 | | | 0.34 | | | | | | | | | |
| 25 | | | 0.38 | | | | | | | | | |
| 26 | | | 1.51 | | | | | | | | | |
| 27 | | 0.02 | 0.07 | | | | | | | | | |
| 28 | | 1.33 | T | | | | | | | | | |
| 29 | | 1.19 | | | | | | | | | | |
| 30 | | T | | | | | | | | | | |
| 31 | | | | | | | | | | | | |
| Totals | 0.00 | 3.51 | 5.19 | 0.23 | 0.44 | 4.89 | 6.51 | 0.33 | 0.04 | 0.00 | 0.00 | 0.00 |
| | | | | | | | | | | Water Year Total: | | 21.14 |

NOTE: All Values are in units of inches, unless otherwise specified.

LEGEND: A - Acculated Total
E - Estimated
T - Trace, unmeasurable amount of rain

# PRECIPITATION

## DAILY RAINFALL SUMMARY

**405B Soledad Canyon**

Gage Type: Standard Private

Observation Time: Figures are for a 24-hour period

Latitude 34-26-23 Longitude: 118-17-33 Elevation: 2150 Feet

Water Year from 10/01/2019 to 09/30/2020

| Day | Oct | Nov | Dec | Jan | Feb | Mar | Apr | May | Jun | Jul | Aug | Sep |
|---|---|---|---|---|---|---|---|---|---|---|---|---|
| 1 | | | | | | | | | | | | |
| 2 | | | | | | | | | | | | |
| 3 | | | | | | | | | | | | |
| 4 | | | 0.99 | | | | | | | | | |
| 5 | | | | | | | | | | | | |
| 6 | | | 0.02 | | | | 1.70 | | | | | |
| 7 | | | | | | | 0.28 | | | | | |
| 8 | | | 0.50 | | | | 0.45 | | | | | |
| 9 | | | 0.11 | | | | 0.33 | | | | | |
| 10 | | | | | | 0.18 | 0.45 | | | | | |
| 11 | | | | | | 0.10 | | | | | | |
| 12 | | | | | | 1.04 | | | | | | |
| 13 | | | | | | 1.66 | | | | | | |
| 14 | | | | | | 0.18 | | | | | | |
| 15 | | | | | | 0.10 | | | | | | |
| 16 | | | | | | 0.51 | | | | | | |
| 17 | | | | 0.04 | | 0.53 | | | | | | |
| 18 | | | | | | 0.02 | | 0.08 | | | 0.09 | |
| 19 | | | | | | 0.05 | | | | | | |
| 20 | | 0.18 | | | | 0.02 | | | | | | |
| 21 | | 0.04 | | | | | | | | | | |
| 22 | | | | | | | | | | | | |
| 23 | | | 0.76 | | 0.22 | 0.80 | | | | | | |
| 24 | | | | | | | | | | | | |
| 25 | | | 0.02 | | | 0.03 | | | | | | |
| 26 | | | 1.75 | | | | | | | | | |
| 27 | | 0.72 | 0.09 | | | 0.20 | | | | | | |
| 28 | | 1.24 | | | | | | | | | | |
| 29 | | 0.29 | | | | | | | | | | |
| 30 | | 0.18 | | | | | | | | | | |
| 31 | | | | | | | | | | | | |
| Totals | 0.00 | 2.65 | 4.24 | 0.04 | 0.22 | 5.42 | 3.21 | 0.08 | 0.00 | 0.00 | 0.09 | 0.00 |
| | | | | | | | | | | Water Year Total: | | 15.95 |

NOTE: All Values are in units of inches, unless otherwise specified.

LEGEND: A - Acculated Total
E - Estimated
T - Trace, unmeasurable amount of rain

# PRECIPITATION

## DAILY RAINFALL SUMMARY

**406C West Azusa**

Gage Type: Standard Gage

Observation Time: Figures are for a 24-hour period

Latitude 34-06-53 Longitude: 117-54-56 Elevation: 505 Feet

Water Year from 10/01/2019 to 09/30/2020

| Day | Oct | Nov | Dec | Jan | Feb | Mar | Apr | May | Jun | Jul | Aug | Sep |
|---|---|---|---|---|---|---|---|---|---|---|---|---|
| 1 | | | | | | | | | | | | |
| 2 | | | | | | | | | | | | |
| 3 | | | | | | | | | | | | |
| 4 | | | 0.36 | | | | | | | | | |
| 5 | | | 0.85 | | | | | | | | | |
| 6 | | | | | | | 0.59 | | | | | |
| 7 | | | | | | | 1.00 | | | | | |
| 8 | | | 0.19 | | | | 0.95 | | | | | |
| 9 | | | 0.10 | | | | 0.65 | | | | | |
| 10 | | | | | | A | 0.70 | | | | | |
| 11 | | | | | | 0.49A | A | | | | | |
| 12 | | | | | | | A | | | | | |
| 13 | | | | | | 0.02 | 0.23A | | | | | |
| 14 | | | | | | 1.80 | | | | | | |
| 15 | | | | | | 0.31 | | | | | | |
| 16 | | | | | | | | | | | | |
| 17 | | | | 0.15 | | | | | | | | |
| 18 | | | | | | 0.42 | | | | | | |
| 19 | | | | | | | | 0.35 | | | | |
| 20 | | | | | | 0.56 | | | | | | |
| 21 | | 0.91 | | | | | | | | | | |
| 22 | | | | | | | | | | | | |
| 23 | | | A | | 0.25 | 0.83E | | | | | | |
| 24 | | | 1.14A | | | | | | | | | |
| 25 | | | 0.30 | | | | | | | | | |
| 26 | | | 1.92E | | | | | | | | | |
| 27 | | | 0.03E | | | | | | | | | |
| 28 | | 0.84 | | | | | | | | | | |
| 29 | | 1.00 | | | | | | | | | | |
| 30 | | | | | | | | | | | | |
| 31 | | | | | | | | | | | | |
| Totals | 0.00 | 2.75 | 4.89 | 0.15 | 0.25 | 4.43 | 4.12 | 0.35 | 0.00 | 0.00 | 0.00 | 0.00 |
| | | | | | | | | | | Water Year Total: | | 16.94 |

NOTE: All Values are in units of inches, unless otherwise specified.

LEGEND: A - Acculated Total
E - Estimated
T - Trace, unmeasurable amount of rain

# PRECIPITATION

## DAILY RAINFALL SUMMARY

**409B Pyramid Reservoir**

Gage Type: Standard Gage

Observation Time: Figures are for a 24-hour period

Latitude 34-40-34 Longitude: 118-46-47 Elevation: 2505 Feet

Water Year from 10/01/2019 to 09/30/2020

| Day | Oct | Nov | Dec | Jan | Feb | Mar | Apr | May | Jun | Jul | Aug | Sep |
|---|---|---|---|---|---|---|---|---|---|---|---|---|
| 1 | | | 0.32 | | | | | | | | | |
| 2 | | | | | | | | | | | | |
| 3 | | | | | | | | | | | | |
| 4 | | | 1.32 | | | | | | | | | |
| 5 | | | 0.16 | | | | | | | | | |
| 6 | | | | | | | 1.56 | | | | | |
| 7 | | | 0.24 | | | | | | | | | |
| 8 | | | 0.05 | | | | 0.83 | | | | | |
| 9 | | | 0.11 | | | | 0.22 | | | | | |
| 10 | | | | 0.01 | | 0.20 | 0.82E | | | | | |
| 11 | | | | | | 0.81 | 0.03 | | | | | |
| 12 | | | | | | | | | | | | |
| 13 | | | | | | 1.06 | | | | | | |
| 14 | | | | | | 0.02 | | | | | | |
| 15 | | | 0.03 | | | | | | | | | |
| 16 | | | | | | 0.40 | | | | | | |
| 17 | | | | 0.07 | | 1.57 | | | | | | |
| 18 | | | | | | 0.03 | | 0.05 | | | | |
| 19 | | | | | | | | | | | | |
| 20 | | 1.05 | | | | 0.02 | | | | | | |
| 21 | | 0.15 | | | | 0.01 | | | | | | |
| 22 | | | | | | | | | | | | |
| 23 | | | 0.83 | | 0.11 | 1.00 | | | | | | |
| 24 | | | 0.14 | | | | | | | | | |
| 25 | | | | | | | | | | | | |
| 26 | | | 0.45E | | | 0.10 | | | | | | |
| 27 | | 0.45 | 1.05E | | | | | | | | | |
| 28 | | 1.28 | 0.52E | | | | | | | | | |
| 29 | | | | | | | | | | | | |
| 30 | | | 0.07 | | | | | | | | | |
| 31 | | | | | | | | | | | | |
| Totals | 0.00 | 2.93 | 5.29 | 0.08 | 0.11 | 5.22 | 3.46 | 0.05 | 0.00 | 0.00 | 0.00 | 0.00 |
| | | | | | | | | | | Water Year Total: | | 17.14 |

NOTE: All Values are in units of inches, unless otherwise specified.

LEGEND: A - Acculated Total
E - Estimated
T - Trace, unmeasurable amount of rain

# PRECIPITATION

## DAILY RAINFALL SUMMARY

**425B San Gabriel Dam**

Gage Type: Standard Gage

Observation Time: Figures are for a 24-hour period

Latitude 34-12-19 Longitude: 117-51-38 Elevation: 1481 Feet

Water Year from 10/01/2019 to 09/30/2020

| Day | Oct | Nov | Dec | Jan | Feb | Mar | Apr | May | Jun | Jul | Aug | Sep |
|---|---|---|---|---|---|---|---|---|---|---|---|---|
| 1 | | | 0.05 | | | 0.18 | | | | | | |
| 2 | | | | | | 0.08 | 0.01 | | | | | |
| 3 | | | | | 0.07 | | | | | | | |
| 4 | | | 0.45 | | | | | | | | | |
| 5 | | | 1.51 | | | | 0.18 | | 0.01 | | | |
| 6 | | | | | | | 2.09 | | | | | |
| 7 | | | 0.35 | | | | 2.07 | | | | | |
| 8 | | | 0.40 | | | | 0.90 | | | | | |
| 9 | | | 0.16 | | 0.02 | | 0.43 | | | | | |
| 10 | | | | | T | 0.32 | 0.81 | | | | | |
| 11 | | | | | | 0.34 | 0.02 | | | | | |
| 12 | | | | | | | | | | | | |
| 13 | | | | | | 1.53 | 0.07 | | | | | |
| 14 | | | | | | 0.16 | T | | | | | |
| 15 | | | | | | 0.22 | | | | | | |
| 16 | | | | | | 0.07 | | | | | | |
| 17 | | | | 0.33 | | 0.99 | | | | | | |
| 18 | | | | | | | | | | | | |
| 19 | | | | | | 0.17 | | 0.19 | | | | |
| 20 | | 0.73 | | | | 0.46 | | | | | | |
| 21 | | 0.92 | | 0.02 | | | | | | | | |
| 22 | | | | | 0.01 | | | | | | | |
| 23 | | | 0.81 | | 0.10 | 1.43 | | | | | | |
| 24 | | | 0.45 | | | 0.01 | | | | | | |
| 25 | | | 0.24 | | | | | | | | | |
| 26 | | | 2.77 | | | | | | | | | |
| 27 | | 0.06 | 0.08 | | | | | | | | | |
| 28 | | 1.44 | | | | | | | | | | |
| 29 | | 1.30 | | | | | | | | | | |
| 30 | | | | | | | | | | | | |
| 31 | | | | | | | | | | | | |
| Totals | 0.00 | 4.45 | 7.27 | 0.35 | 0.20 | 5.96 | 6.58 | 0.19 | 0.01 | 0.00 | 0.00 | 0.00 |
| | | | | | | | | | | Water Year Total: | | 25.01 |

NOTE: All Values are in units of inches, unless otherwise specified.

LEGEND: A - Acculated Total
E - Estimated
T - Trace, unmeasurable amount of rain

# PRECIPITATION

## DAILY RAINFALL SUMMARY

**436C Hansen Dam**

Gage Type: Standard Gage

Observation Time: Figures are for a 24-hour period

Latitude 34-16-08 Longitude: 118-23-59 Elevation: 1110 Feet

Water Year from 10/01/2019 to 09/30/2020

| Day | Oct | Nov | Dec | Jan | Feb | Mar | Apr | May | Jun | Jul | Aug | Sep |
|---|---|---|---|---|---|---|---|---|---|---|---|---|
| 1 | | | 0.03 | | | | | | | | | |
| 2 | | | | | | | | | | | | |
| 3 | | | | | | | | | | | | |
| 4 | | | 0.98 | | | | | | | | | |
| 5 | | | 0.01 | | | | 0.02 | | | | | |
| 6 | | | 0.02 | | | | 1.33 | | | | | |
| 7 | | | 0.09 | | | | 0.17 | | | | | |
| 8 | | | 0.37 | | | | 1.07 | | | | | |
| 9 | | | | | | | 0.61 | | | | | |
| 10 | | | | | | 0.20 | 0.45 | | | | | |
| 11 | | | | | | 0.20 | | | | | | |
| 12 | | | | | | 1.00 | | | | | | |
| 13 | | | | | | 1.69 | 0.05 | | | | | |
| 14 | | | | | | 0.18 | | | | | | |
| 15 | | | | | | 0.11 | | | | | | |
| 16 | | | | | | 0.30 | | | | | | |
| 17 | | | | 0.17 | | 0.53 | | | | | | |
| 18 | | | | | | | | 0.27 | | | | |
| 19 | | | | | | 0.05 | | | | | | |
| 20 | | 0.42 | | | | | | | | | | |
| 21 | | | | | | | | | | | | |
| 22 | | | | | | | | | | | | |
| 23 | | | 0.97 | | | 0.96 | | | | | | |
| 24 | | | | | | | | | | | | |
| 25 | | | | | | 0.02 | | | | | | |
| 26 | | | 1.77 | | | | | | | | | |
| 27 | | 0.64 | | | | | | | | | | |
| 28 | | 1.15 | | | | | | | | | | |
| 29 | | 0.19 | | | | | | | | | | |
| 30 | | | | | | | | | | | | |
| 31 | | | | | | | | | | | | |
| Totals | 0.00 | 2.40 | 4.24 | 0.17 | 0.00 | 5.24 | 3.70 | 0.27 | 0.00 | 0.00 | 0.00 | 0.00 |
| | | | | | | | | | | Water Year Total: | | 16.02 |

NOTE: All Values are in units of inches, unless otherwise specified.

LEGEND: A - Acculated Total
E - Estimated
T - Trace, unmeasurable amount of rain

# PRECIPITATION

## DAILY RAINFALL SUMMARY

**445B Live Oak Dam**

Gage Type: Standard Gage

Observation Time: Figures are for a 24-hour period

Latitude 34-08-02 Longitude: 117-44-38 Elevation: 1510 Feet

Water Year from 10/01/2019 to 09/30/2020

| Day | Oct | Nov | Dec | Jan | Feb | Mar | Apr | May | Jun | Jul | Aug | Sep |
|---|---|---|---|---|---|---|---|---|---|---|---|---|
| 1 | | | T | | | | | | | | | |
| 2 | | | | | | 0.07 | | | | | | |
| 3 | | | | | 0.05E | | | | | | | |
| 4 | | | 0.45 | | | | | | | | | |
| 5 | | | 0.82 | | | | | | 0.01 | | | |
| 6 | | | | | | | 0.78 | | | | | |
| 7 | | | 0.16 | | | | 0.77 | | T | | | |
| 8 | | | 0.16 | | | | 0.94E | | | | | |
| 9 | | | 0.08 | | | | 0.17 | | | | | |
| 10 | | | | | | 0.30 | 0.77 | | | | | |
| 11 | | | | | | 0.33 | 0.02 | | | | | |
| 12 | | | | | | | | | | | | |
| 13 | | | | | | 1.34 | 0.39 | | | | | |
| 14 | | | | | | 0.08 | 0.02 | | | | | |
| 15 | | | | | | 0.02 | | | | | | |
| 16 | | | | | | 0.02 | | | | | | |
| 17 | | | | 0.13 | | 0.27 | | | | | | |
| 18 | | | | | | | | | | | | |
| 19 | | | | | | | | 0.17 | | | | |
| 20 | | 0.08 | | | | 0.41 | | | | | | |
| 21 | | 0.30 | | | | | | | | | | |
| 22 | | | | | | | | | | | | |
| 23 | | | 0.70 | | 0.16E | 0.75E | | | | | | |
| 24 | | | 0.23 | | | | | | | | | |
| 25 | | | | | | | | | | | | |
| 26 | | | 2.13 | | | | | | | | | |
| 27 | | 0.11 | 0.15E | | | | | | | | | |
| 28 | | 0.86 | | | | | | | | | | |
| 29 | | 0.95 | | | | | | | | | | |
| 30 | | T | | | | | | | | | | |
| 31 | | | | | | | | | | | | |
| Totals | 0.00 | 2.30 | 4.88 | 0.13 | 0.21 | 3.59 | 3.86 | 0.17 | 0.01 | 0.00 | 0.00 | 0.00 |

Water Year Total: 15.15

NOTE: All Values are in units of inches, unless otherwise specified.

LEGEND: A - Acculated Total
E - Estimated
T - Trace, unmeasurable amount of rain

# PRECIPITATION

## DAILY RAINFALL SUMMARY

**449B Eaton Wash Dam**

Gage Type: Standard Gage

Observation Time: Figures are for a 24-hour period

Latitude 34-10-06 Longitude: 118-05-33 Elevation: 880 Feet

Water Year from 10/01/2019 to 09/30/2020

| Day | Oct | Nov | Dec | Jan | Feb | Mar | Apr | May | Jun | Jul | Aug | Sep |
|---|---|---|---|---|---|---|---|---|---|---|---|---|
| 1 | | | 0.02 | | | 0.07 | | | | | | |
| 2 | | | | | | | | | | | | |
| 3 | | | | | | | | | | | | |
| 4 | | | 0.30 | | | | | | | | | |
| 5 | | | 0.67 | | | | 0.13E | | 0.02 | | | |
| 6 | | | | | | | 1.80 | | | | | |
| 7 | | | A | | | | 0.97 | | | | | |
| 8 | | | A | | | | 0.83 | | | | | |
| 9 | | | 0.44A | | | | 0.18 | | | | | |
| 10 | | | | | 1.38 | 0.27 | 0.69 | | | | | |
| 11 | | | | | | 0.30 | | | | | | |
| 12 | | | | | | | | | | | | |
| 13 | | | | | | 1.52 | 0.40 | | | | | |
| 14 | | | | | | 0.18 | | | | | | |
| 15 | | | | | | A | | | | | | |
| 16 | | | | | | 0.23A | | | | | | |
| 17 | | | | 0.20 | | 0.83 | | | | | | |
| 18 | | | | 0.01 | | | | | | | | |
| 19 | | | | | | | | 0.20 | | | | |
| 20 | | | | | | 0.21 | | | | | | |
| 21 | | 0.20 | | | | | | | | | | |
| 22 | | | | | | | | | | | | |
| 23 | | | 0.94 | | 0.02 | 0.79 | | | | | | |
| 24 | | | 0.25 | | | | | | | | | |
| 25 | | | | | | | | | | | | |
| 26 | | | 2.25 | | | | | | | | | |
| 27 | | | 0.03 | | | | | | | | | |
| 28 | | 1.03 | | | | | | | | | | |
| 29 | | 1.00 | | | | | | | | | | |
| 30 | | | | | | | | | | | | |
| 31 | | | | | | | | | | | | |
| Totals | 0.00 | 2.23 | 4.90 | 0.21 | 1.40 | 4.40 | 5.00 | 0.20 | 0.02 | 0.00 | 0.00 | 0.00 |
| | | | | | | | | | | Water Year Total: | | 18.36 |

NOTE: All Values are in units of inches, unless otherwise specified.

LEGEND: A - Acculated Total
E - Estimated
T - Trace, unmeasurable amount of rain

# PRECIPITATION

## DAILY RAINFALL SUMMARY

**453D Devil's Gate Dam**

Gage Type: Standard Gage

Observation Time: Figures are for a 24-hour period

Latitude 34-10-53 Longitude: 118-10-27 Elevation: 980 Feet

Water Year from 10/01/2019 to 09/30/2020

| Day | Oct | Nov | Dec | Jan | Feb | Mar | Apr | May | Jun | Jul | Aug | Sep |
|---|---|---|---|---|---|---|---|---|---|---|---|---|
| 1 | | | 0.04 | | | 0.10 | | | | | | |
| 2 | | | | | | | | | | | | |
| 3 | | | | | | | | | | | | |
| 4 | | | 0.46 | | | | | | | | | |
| 5 | | | 0.75 | | | | A | | | | | |
| 6 | | | | | | | 2.30A | | | | | |
| 7 | | | A | | | | 0.46 | | | | | |
| 8 | | | A | | | | 1.39 | | | | | |
| 9 | | | 0.69A | | | | 0.19 | | | | | |
| 10 | | | | | 0.03 | 0.34 | 0.48 | | | | | |
| 11 | | | | | | 0.22 | 0.12 | | | | | |
| 12 | | | | | | | | | | | | |
| 13 | | | | | | 1.42 | 0.60 | | | | | |
| 14 | | | | | | A | | | | | | |
| 15 | | | | | | A | | | | | | |
| 16 | | | T | | | 0.65A | | | | | | |
| 17 | | | | 0.26 | | 0.71 | | | | | | |
| 18 | | | | | | | 0.08E | T | | | | |
| 19 | | | | | | | | 0.09 | | | | |
| 20 | | A | | | | 0.08 | | | | | | |
| 21 | | 0.36A | | | | | | | | | | |
| 22 | | | | | | | | | | | | |
| 23 | | | 1.18 | | 0.03 | 1.37 | | | | | | |
| 24 | | | 0.06 | | | | | | | | | |
| 25 | | | T | | | | | | | | | |
| 26 | | | 2.95 | | | 0.07 | | | | | | |
| 27 | | 0.29 | T | | | | | | | | | |
| 28 | | 1.50 | | | | | | | | | | |
| 29 | | 0.52 | | | | | | | | | | |
| 30 | | | | | | | | | | | | |
| 31 | | | | | | | | | | | | |
| Totals | 0.00 | 2.67 | 6.13 | 0.26 | 0.06 | 4.96 | 5.62 | 0.09 | 0.00 | 0.00 | 0.00 | 0.00 |
| | | | | | | | | | | Water Year Total: | | 19.79 |

NOTE: All Values are in units of inches, unless otherwise specified.

LEGEND: A - Acculated Total
E - Estimated
T - Trace, unmeasurable amount of rain

# PRECIPITATION

## DAILY RAINFALL SUMMARY

**465C Sepulveda Dam**

Gage Type: Standard Gage

Observation Time: Figures are for a 24-hour period

Latitude 34-10-06 Longitude: 118-28-11 Elevation: 683 Feet

Water Year from 10/01/2019 to 09/30/2020

| Day | Oct | Nov | Dec | Jan | Feb | Mar | Apr | May | Jun | Jul | Aug | Sep |
|---|---|---|---|---|---|---|---|---|---|---|---|---|
| 1 | | | 0.02 | | | | | | | | | |
| 2 | | | | | | | | | | | | |
| 3 | | | | | | | | | | | | |
| 4 | | | 1.07 | | | | | | | | | |
| 5 | | | | | | | | | | | | |
| 6 | | | 0.05 | | | | 1.88 | | | | | |
| 7 | | | 0.05 | | | | 0.12 | | | | | |
| 8 | | | 0.07 | | | 0.01 | 0.55 | | | | | |
| 9 | | | | | | | 0.70 | | | | | |
| 10 | | | | | | 0.23 | 0.62 | | | | | |
| 11 | | | | | | 0.06 | | | | | | |
| 12 | | | | | | 1.41 | | | | | | |
| 13 | | | | | | 1.52 | | | | | | |
| 14 | | | | | | 0.16 | | | | | | |
| 15 | | | | | | 0.08 | | | | | | |
| 16 | | | | | | 0.54 | | | | | | |
| 17 | | | | 0.14 | | 0.52 | | | | | | |
| 18 | | | | | | | | 0.06 | | | | |
| 19 | | | | | | 0.01 | | | | | | |
| 20 | | 0.06 | | | | 0.03 | | | | | | |
| 21 | | | | | | | | | | | | |
| 22 | | | | | | | | | | | | |
| 23 | | | 2.16 | | | 1.16 | | | | | | |
| 24 | | | | | | | | | | | | |
| 25 | | | | | | | | | | | | |
| 26 | | | 2.39 | | | | | | | | | |
| 27 | | 0.69 | | | | | | | | | | |
| 28 | | 1.42 | | | | | | | | | | |
| 29 | | 0.12 | | | | | | | | | | |
| 30 | | 0.02 | | | | | | | | | | |
| 31 | | | | | | | | | | | | |
| Totals | 0.00 | 2.31 | 5.81 | 0.14 | 0.00 | 5.73 | 3.87 | 0.06 | 0.00 | 0.00 | 0.00 | 0.00 |

Water Year Total: 17.92

NOTE: All Values are in units of inches, unless otherwise specified.

LEGEND: A - Acculated Total
E - Estimated
T - Trace, unmeasurable amount of rain

# PRECIPITATION

## DAILY RAINFALL SUMMARY

**482 Los Angeles-U.S.C.**

Gage Type: Standard Gage

Observation Time: Figures are for a 24-hour period

Latitude 34-01-14 Longitude: 118-17-15 Elevation: 208 Feet

Water Year from 10/01/2019 to 09/30/2020

| Day | Oct | Nov | Dec | Jan | Feb | Mar | Apr | May | Jun | Jul | Aug | Sep |
|---|---|---|---|---|---|---|---|---|---|---|---|---|
| 1 | | | | | | 0.01 | | | | | | |
| 2 | | | | | | T | | | | | | |
| 3 | | | T | | | | | | | | | |
| 4 | | | 1.12 | | | | | | | | | |
| 5 | | | | | | | 0.12 | | | | | |
| 6 | | | 0.04 | | | | 1.10 | | | | | |
| 7 | | | 0.01 | | | | 0.82 | | | | | |
| 8 | | | 0.20 | | | | 0.01 | | | | | |
| 9 | | | | T | T | 0.04 | 0.75 | | | | | |
| 10 | | | | | | 0.25 | 0.16 | | | | | |
| 11 | | | | | | | | | | | | |
| 12 | | | | | | 1.30 | 0.06 | | | | | |
| 13 | | | | | | 0.50 | | | | | | |
| 14 | | | T | | | 0.26 | | | | | | |
| 15 | | | | | | 0.05 | | | | | | |
| 16 | | | | 0.15 | | 0.38 | | | | | | |
| 17 | | | | 0.15 | | T | | | | | | |
| 18 | | | | | | | | 0.14 | | | | |
| 19 | | T | | | | T | | | | | | |
| 20 | | 0.63 | | | | T | | | | | | |
| 21 | | | | 0.02 | | 0.01 | | | | | | |
| 22 | | | 0.80 | | 0.04 | 1.51 | | | | | | |
| 23 | | | 0.92 | | | 0.03 | | | | | | |
| 24 | | | | | | T | | | | | | |
| 25 | | | 1.07 | | | | | | | | | |
| 26 | | | 0.68 | | | | | | | | | |
| 27 | | 0.49 | | | | | | | | | | |
| 28 | | 1.00 | | | | | | | | | | |
| 29 | | T | | | | | | | | | | |
| 30 | | T | | | | | | | | | | |
| 31 | | | | | | | | | | | | |
| Totals | 0.00 | 2.12 | 4.84 | 0.32 | 0.04 | 4.34 | 3.02 | 0.14 | 0.00 | 0.00 | 0.00 | 0.00 |
| | | | | | | | | | | Water Year Total: | | 14.82 |

NOTE: All Values are in units of inches, unless otherwise specified.

LEGEND: A - Acculated Total
E - Estimated
T - Trace, unmeasurable amount of rain

# PRECIPITATION

## DAILY RAINFALL SUMMARY

**497 Claremont-Slaughter**

Gage Type: Standard Private

Observation Time: Figures are for a 24-hour period

Latitude 34-07-35 Longitude: 117-43-55 Elevation: 1350 Feet

Water Year from 10/01/2019 to 09/30/2020

| Day | Oct | Nov | Dec | Jan | Feb | Mar | Apr | May | Jun | Jul | Aug | Sep |
|---|---|---|---|---|---|---|---|---|---|---|---|---|
| 1 | | | 0.02 | | | 0.07 | | | | | | |
| 2 | | | | | | | | | | | | |
| 3 | | | | | | | | | 0.03 | | | |
| 4 | | | 1.72 | | | | | | | | | |
| 5 | | | 0.09 | | | | 0.05 | | 0.02 | | | |
| 6 | | | 0.06 | | | | 1.38 | | | | | |
| 7 | | | 0.22 | | | | 0.52 | | | | | |
| 8 | | | 0.33 | | | | 1.00 | | | | | |
| 9 | | | 0.01 | | | | 0.84 | | | | | |
| 10 | | | | | | 0.57 | 0.60 | | | | | |
| 11 | | | | | | 0.30 | | | | | | |
| 12 | | | | | | 1.23 | 0.10 | | | | | |
| 13 | | | | | | 0.50 | 0.34 | | | | | |
| 14 | | | 0.02 | | | 0.05 | | | | | | |
| 15 | | | 0.01 | | | 0.10 | | | | | | |
| 16 | | | | | | A | | | | | | |
| 17 | | | | 0.17 | | 0.24A | | | | | | |
| 18 | | | | | | | | 0.13 | | | | |
| 19 | | | | | | 0.15 | | | | | | |
| 20 | | 0.28 | | | | 0.34 | | | | | | |
| 21 | | 0.03 | | | | | | | | | | |
| 22 | | | | | A | | | | | | | |
| 23 | | | 0.84 | | 0.18A | 0.77 | | | | | | |
| 24 | | | | | | | | | | | | |
| 25 | | | 0.15 | | | | | | | | | |
| 26 | | | 2.65 | | | | | | | | | |
| 27 | | 0.57 | 0.01 | | | | | | | | | |
| 28 | | 1.69 | | | | | | | | | | |
| 29 | | 0.42 | | | | | | | | | | |
| 30 | | | | | | | | | | | | |
| 31 | | | | | | | | | | | | |
| Totals | 0.00 | 2.99 | 6.13 | 0.17 | 0.18 | 4.32 | 4.83 | 0.13 | 0.05 | 0.00 | 0.00 | 0.00 |
| | | | | | | | | | | Water Year Total: | | 18.80 |

NOTE: All Values are in units of inches, unless otherwise specified.

LEGEND: A - Acculated Total
E - Estimated
T - Trace, unmeasurable amount of rain

# PRECIPITATION

## DAILY RAINFALL SUMMARY

**542 Fairmont**

Gage Type: Standard Gage

Observation Time: Figures are for a 24-hour period

Latitude 34-42-15 Longitude: 118-25-40 Elevation: 3050 Feet

Water Year from 10/01/2019 to 09/30/2020

| Day | Oct | Nov | Dec | Jan | Feb | Mar | Apr | May | Jun | Jul | Aug | Sep |
|---|---|---|---|---|---|---|---|---|---|---|---|---|
| 1 | | | 0.27 | | | | | | | | | |
| 2 | | | | | | 0.10 | | | | | | |
| 3 | | | | | | | | | | | | |
| 4 | | | 0.50 | | | | | | | | | |
| 5 | | | 0.72 | | | | 0.01 | | | | | |
| 6 | | | | | | | 1.68 | | | | | |
| 7 | | | 0.13 | | | | 0.32 | | | | | |
| 8 | | | 0.14 | | | | 0.72 | | | | | |
| 9 | | | 0.35 | | | | 0.35 | | | | | |
| 10 | | | | | | 0.20 | 1.22 | | | | | |
| 11 | | | | | | 0.39 | 0.14 | | | | | |
| 12 | | | | | | | | | | | | |
| 13 | | | | | | 1.51 | | | | | | |
| 14 | | | | | | 0.05 | | | | | | |
| 15 | | | | | | 0.11 | | | | | | |
| 16 | | | | | | 0.10 | | | | | | |
| 17 | | | | 0.22 | | 1.24 | | | | | | |
| 18 | | | | | | | | | | | | |
| 19 | | | | | | | | 0.09 | | | | |
| 20 | | 0.04 | | | | 0.02 | | | | | | |
| 21 | | 0.19 | | 0.04 | | 0.03 | | | | | | |
| 22 | | | | | 0.01 | | | | | | | |
| 23 | | | 0.67 | | 0.08 | 0.66 | | | | | | |
| 24 | | | 0.10 | | | | | | | | | |
| 25 | | | | | | 0.01 | | | | | | |
| 26 | | | 0.40 | | | 0.01 | | | | | | |
| 27 | | 0.23 | 0.93 | | | | | | | | | |
| 28 | | 1.20 | | | | | | | | | | |
| 29 | | 0.27 | | | | | | | | | | |
| 30 | | 0.27 | | | | | | | | | | |
| 31 | | | | | | | | | | | | |
| Totals | 0.00 | 2.20 | 4.21 | 0.26 | 0.09 | 4.43 | 4.44 | 0.09 | 0.00 | 0.00 | 0.00 | 0.00 |

Water Year Total: 15.72

NOTE: All Values are in units of inches, unless otherwise specified.

LEGEND: A - Acculated Total
E - Estimated
T - Trace, unmeasurable amount of rain

# PRECIPITATION

## DAILY RAINFALL SUMMARY

**591B Santa Anita Reservoir**

Gage Type: Standard Gage

Observation Time: Figures are for a 24-hour period

Latitude 34-11-08 Longitude: 118-06-16 Elevation: 1205 Feet

Water Year from 10/01/2019 to 09/30/2020

| Day | Oct | Nov | Dec | Jan | Feb | Mar | Apr | May | Jun | Jul | Aug | Sep |
|---|---|---|---|---|---|---|---|---|---|---|---|---|
| 1 | | | 0.04 | | | 0.07 | | | | | | |
| 2 | | | 0.01 | | | | | | | | | |
| 3 | | | | | | | | | | | | |
| 4 | | | 1.06 | | | | | | | | | |
| 5 | | | 0.15 | | | | | | | | | |
| 6 | | | | | | | 2.50 | | | | | |
| 7 | | | 0.20 | | | | 0.36 | | | | | |
| 8 | | | 0.21 | | | | 0.98 | | | | | |
| 9 | | | 0.75 | | | | 0.28 | | | | | |
| 10 | | | | | 0.15 | 0.40 | 0.63 | | | | | |
| 11 | | | | | | 0.09 | 0.05 | | | | | |
| 12 | | | | | | | | | | | | |
| 13 | | | | | | 1.63 | 0.50 | | | | | |
| 14 | | | 0.01 | | | 0.18 | | | | | | |
| 15 | | | | | | 0.30 | | | | | | |
| 16 | | | | | | 0.20 | | | | | | |
| 17 | | | | 0.23 | | 0.76 | | | | | | |
| 18 | | | | | | 0.01 | | | | | | |
| 19 | | | | | | 0.15 | | 0.39 | | | | |
| 20 | | | | | | 0.03 | | | | | | |
| 21 | | 0.10 | | 0.02 | | | | | | | | |
| 22 | | 0.09 | | | | | | | | | | |
| 23 | | | 1.14 | | 0.03 | 0.86 | | | | | | |
| 24 | | | 0.17 | | | | | | | | | |
| 25 | | | | | | | | | | | | |
| 26 | | | 2.59 | | | | | | | | | |
| 27 | | | 0.02 | | | | | | | | | |
| 28 | | 1.55 | | | | | | | | | | |
| 29 | | 0.65 | | | | | | | | | | |
| 30 | | | | | | | | | | | | |
| 31 | | | | | | | | | | | | |
| Totals | 0.00 | 2.39 | 6.35 | 0.25 | 0.18 | 4.68 | 5.30 | 0.39 | 0.00 | 0.00 | 0.00 | 0.00 |
| | | | | | | | | | | | Water Year Total: | 19.54 |

NOTE: All Values are in units of inches, unless otherwise specified.

LEGEND: A - Acculated Total
E - Estimated
T - Trace, unmeasurable amount of rain

# PRECIPITATION

## DAILY RAINFALL SUMMARY

**598D Neenach-Check 43-California D.W.R.**

Gage Type: Standard Gage

Observation Time: Figures are for a 24-hour period

Latitude 34-47-40 Longitude: 118-37-15 Elevation: 2965 Feet

Water Year from 10/01/2019 to 09/30/2020

| Day | Oct | Nov | Dec | Jan | Feb | Mar | Apr | May | Jun | Jul | Aug | Sep |
|---|---|---|---|---|---|---|---|---|---|---|---|---|
| 1 | | | 1.36A | | | | | | | | | |
| 2 | | | | | | 0.05 | | | | | | |
| 3 | | | 0.01 | | | | | | | | | |
| 4 | | | 0.68 | | | | | | | | | |
| 5 | | | 0.05 | | | | | | | | | |
| 6 | | | 0.01 | | | | 0.98 | | | | | |
| 7 | | | A | | | | 0.05 | | | | | |
| 8 | | | | | | | 0.90 | | | | | |
| 9 | | | 0.18A | | | | 0.41 | | | | | |
| 10 | | | | | | 0.15 | 0.86 | | | | | |
| 11 | | | | | | A | 0.03 | | | | | |
| 12 | | | | | | | | | | | | |
| 13 | | | | | | A | | | | | | |
| 14 | | | | | | | | | | | | |
| 15 | | | 0.02 | | | A | | | | | | |
| 16 | | | | | | 1.53A | | | | | | |
| 17 | | | | A | | A | | | | | | |
| 18 | | | | | | 0.73A | | | | | | |
| 19 | | | | | | 0.01 | | | | | | |
| 20 | | 0.59 | | | | 0.01 | | | | | | |
| 21 | | 0.08 | | 0.19A | | | | | | | | |
| 22 | | 0.01 | | | | | | | | | | |
| 23 | | | 0.52 | | 0.17 | 0.41 | | | | | | |
| 24 | | | 0.03 | | | | | | | | | |
| 25 | | | | | | | | | | | | |
| 26 | | | 0.61E | | | 0.17 | | | | | | |
| 27 | | 0.24 | 1.74E | | | | | | | | | |
| 28 | | A | 0.15E | | | | | | | | | |
| 29 | | A | | | | | | | | | | |
| 30 | | A | 0.10 | | | | | | | | | |
| 31 | | | | | | | | | | | | |
| Totals | 0.00 | 0.92 | 5.46 | 0.19 | 0.17 | 3.06 | 3.23 | 0.00 | 0.00 | 0.00 | 0.00 | 0.00 |
| | | | | | | | | | | | Water Year Total: | 13.03 |

NOTE: All Values are in units of inches, unless otherwise specified.

LEGEND: A - Acculated Total
E - Estimated
T - Trace, unmeasurable amount of rain

# PRECIPITATION

## DAILY RAINFALL SUMMARY

**610B Pasadena-City Hall**

Gage Type: Daily Automatic Observation Time: 2400

Latitude 34-08-54 Longitude: 118-08-36 Elevation: 864 Feet

Water Year from 10/01/2019 to 09/30/2020

| Day | Oct | Nov | Dec | Jan | Feb | Mar | Apr | May | Jun | Jul | Aug | Sep |
|---|---|---|---|---|---|---|---|---|---|---|---|---|
| 1 | | | | | | 0.02 | | | | | | |
| 2 | | | | | | | | | | | | |
| 3 | | | | | | | | | | | | |
| 4 | | | 0.47 | | | | | | | | | |
| 5 | | | 0.65 | | | | 0.11 | | | | | |
| 6 | | | | | | | 2.30 | | | | | |
| 7 | | | 0.50 | | | | 0.07 | | | | | |
| 8 | | | | | | | 0.98 | | | | | |
| 9 | | | 0.75 | | | | 0.49 | | | | | |
| 10 | | | 0.25 | | 0.96 | 0.30 | 0.60 | | | | | |
| 11 | | | 0.25 | | | 0.17 | 0.01 | | | | | |
| 12 | | | | | | 0.03 | 0.05 | | | | | |
| 13 | | | | | | 1.75 | 0.25 | | | | | |
| 14 | | | 0.01 | | | 0.15 | 0.01 | | | | | |
| 15 | | | | | | 0.10 | | | | | | |
| 16 | | | | | | 0.02 | | | | | | |
| 17 | | | | 0.20 | | 0.75 | | | | | | |
| 18 | | | | | | | | 0.42 | | | | |
| 19 | | | | | | 0.09 | 0.01 | | | | | |
| 20 | | | | | | 0.02 | | | | | | |
| 21 | | 0.17 | | 0.02 | | | | | | | | |
| 22 | | | | | | | | | | | | |
| 23 | | | 1.12 | | 0.05E | 1.07 | | | | | | |
| 24 | | | 0.07 | | | | | | | | | |
| 25 | | | | | | | | | | | | |
| 26 | | | 2.10 | | | | | | | | | |
| 27 | | 0.20 | 0.05 | | | | | | | | | |
| 28 | | 1.43 | | | | | | | | | | |
| 29 | | 0.75 | | | | | | | | | | |
| 30 | | | | | | | | | | | | |
| 31 | | | | | | | | | | | | |
| Totals | 0.00 | 2.55 | 6.22 | 0.22 | 1.01 | 4.47 | 4.88 | 0.42 | 0.00 | 0.00 | 0.00 | 0.00 |
| | | | | | | | | | | Water Year Total: | | 19.77 |

NOTE: All Values are in units of inches, unless otherwise specified.

LEGEND: A - Acculated Total
E - Estimated
T - Trace, unmeasurable amount of rain

# PRECIPITATION

## DAILY RAINFALL SUMMARY

**612B Pasadena-Chlorine Plant**

Gage Type: Standard Gage

Observation Time: Figures are for a 24-hour period

Latitude 34-12-04 Longitude: 118-09-49 Elevation: 1160 Feet

Water Year from 10/01/2019 to 09/30/2020

| Day | Oct | Nov | Dec | Jan | Feb | Mar | Apr | May | Jun | Jul | Aug | Sep |
|---|---|---|---|---|---|---|---|---|---|---|---|---|
| 1 | | | 0.05 | | | 0.07 | | | | | | |
| 2 | | | 0.01 | | | | | | | | | |
| 3 | | | | | | | | | | | | |
| 4 | | | 1.14 | | | | | | | | | |
| 5 | | | 0.13 | | | | | | | | | |
| 6 | | | | | | | 2.75 | | | | | |
| 7 | | | 0.23 | | | | 0.05 | | | | | |
| 8 | | | 0.50 | | | | 1.30 | | | | | |
| 9 | | | 0.02 | | | | 0.55 | | | | | |
| 10 | | | | | 0.03 | 0.34 | 0.53 | | | | | |
| 11 | | | | | | 0.05 | 0.08 | | | | | |
| 12 | | | | | | | | | | | | |
| 13 | | | | | | 1.69 | 0.44 | | | | | |
| 14 | | | 0.01 | | | 0.23 | | | | | | |
| 15 | | | | | | 0.42 | | | | | | |
| 16 | | | | | | 0.21 | | | | | | |
| 17 | | | | 0.26 | | 0.78 | | | | | | |
| 18 | | | | | | 0.01 | | A | | | | |
| 19 | | | | | | 0.07 | | 0.42A | | | | |
| 20 | | A | | | | 0.03 | | | | | | |
| 21 | | 0.19A | | 0.01 | | | | | | | | |
| 22 | | 0.07 | | | | | | | | | | |
| 23 | | | 1.22 | | 0.02 | 1.17 | | | | | | |
| 24 | | | 0.10 | | | | | | | | | |
| 25 | | | | | | | | | | | | |
| 26 | | | 2.74 | | | | | | | | | |
| 27 | | A | 0.02 | | | | | | | | | |
| 28 | | 1.70A | | | | | | | | | | |
| 29 | | 0.43 | | | | | | | | | | |
| 30 | | | | | | | | | | | | |
| 31 | | | | | | | | | | | | |
| Totals | 0.00 | 2.39 | 6.17 | 0.27 | 0.05 | 5.07 | 5.70 | 0.42 | 0.00 | 0.00 | 0.00 | 0.00 |
| | | | | | | | | | | Water Year Total: | | 20.07 |

NOTE: All Values are in units of inches, unless otherwise specified.

LEGEND: A - Acculated Total
E - Estimated
T - Trace, unmeasurable amount of rain

# PRECIPITATION

## DAILY RAINFALL SUMMARY

**613C Pasadena Fire Station**

Gage Type: Standard Gage

Observation Time: Figures are for a 24-hour period

Latitude 34-07-15 Longitude: 118-08-05 Elevation: 779 Feet

Water Year from 10/01/2019 to 09/30/2020

| Day | Oct | Nov | Dec | Jan | Feb | Mar | Apr | May | Jun | Jul | Aug | Sep |
|---|---|---|---|---|---|---|---|---|---|---|---|---|
| 1 | | | 0.05 | | | 0.02 | | | | | | |
| 2 | | | 0.01 | | | | | | | | | |
| 3 | | | | | | | | | | | | |
| 4 | | | 1.05 | | | | | | | | | |
| 5 | | | 0.05 | | | | | | | | | |
| 6 | | | | | | | 2.25 | | | | | |
| 7 | | | 0.14 | | | | 0.03 | | | | | |
| 8 | | | 0.13 | | | | 0.81 | | | | | |
| 9 | | | 0.01 | | | | 0.31 | | | | | |
| 10 | | | | | 0.30 | 0.34 | 0.95 | | | | | |
| 11 | | | | | | 0.20 | 0.02 | | | | | |
| 12 | | | | | | | | | | | | |
| 13 | | | | | | 1.90 | 0.16 | | | | | |
| 14 | | | 0.02 | | | 0.19 | | | | | | |
| 15 | | | | | | 0.20 | | | | | | |
| 16 | | | | | | 0.13 | | | | | | |
| 17 | | | | 0.24 | | 0.67 | | | | | | |
| 18 | | | | | | 0.01 | | | | | | |
| 19 | | | | | | 0.13 | | 0.48 | | | | |
| 20 | | A | | | | 0.02 | | | | | | |
| 21 | | 0.28A | | 0.03 | | | | | | | | |
| 22 | | 0.03 | | | | | | | | | | |
| 23 | | | 1.22 | | | 0.84 | | | | | | |
| 24 | | | 0.08 | | | | | | | | | |
| 25 | | | | | | | | | | | | |
| 26 | | | 2.85 | | | | | | | | | |
| 27 | | A | 0.01 | | | | | | | | | |
| 28 | | 1.17A | | | | | | | | | | |
| 29 | | 1.15 | | | | | | | 0.01 | | | |
| 30 | | | | | | | | | | | | |
| 31 | | | | | | | | | | | | |
| Totals | 0.00 | 2.63 | 5.62 | 0.27 | 0.30 | 4.65 | 4.53 | 0.48 | 0.01 | 0.00 | 0.00 | 0.00 |
| | | | | | | | | | | Water Year Total: | | 18.49 |

NOTE: All Values are in units of inches, unless otherwise specified.

LEGEND: A - Acculated Total
E - Estimated
T - Trace, unmeasurable amount of rain

# PRECIPITATION

## DAILY RAINFALL SUMMARY

**626 Thompson Creek Dam Precipitation**

Gage Type: Standard Gage

Observation Time: Figures are for a 24-hour period

Latitude 34-08-26 Longitude: 117-42-39 Elevation: 1670 Feet

Water Year from 10/01/2019 to 09/30/2020

| Day | Oct | Nov | Dec | Jan | Feb | Mar | Apr | May | Jun | Jul | Aug | Sep |
|---|---|---|---|---|---|---|---|---|---|---|---|---|
| 1 | | | T | | | | | | | | | |
| 2 | | | | | | 0.07 | | | | | | |
| 3 | | | | | | | | | | | | |
| 4 | | | 0.79 | | | | | | | | | |
| 5 | | | 1.12 | | | | | | 0.02 | | | |
| 6 | | | | | | | 1.33 | | | | | |
| 7 | | | 0.25 | | | | 0.69 | | T | | | |
| 8 | | | 0.23 | | | | 1.01 | | | | | |
| 9 | | | 0.13 | | | | 0.42 | | | | | |
| 10 | | | | | | 0.45 | 1.02 | | | | | |
| 11 | | | | | | 0.54 | A | | | | | |
| 12 | | | | | | | | | | | | |
| 13 | | | | | | 1.68 | 0.46A | | | | | |
| 14 | | | T | | | 0.06 | 0.02 | | | | | |
| 15 | | | T | | | 0.02 | | | | | | |
| 16 | | | | | | 0.01 | | | | | | |
| 17 | | | | 0.16 | | 0.34 | | | | | | |
| 18 | | | | | | | | | | | | |
| 19 | | | | | | | | 0.12E | | | | |
| 20 | | 0.09 | | | | 0.40 | | | | | | |
| 21 | | 0.26 | | | | | | | | | | |
| 22 | | | | | 0.07 | | | | | | | |
| 23 | | | 0.75 | | 0.14 | 0.73 | | | | | | |
| 24 | | | 0.28 | | | | | | | | | |
| 25 | | | 0.08E | | T | | | | | | | |
| 26 | | | 2.50 | | | | | | | | | |
| 27 | | 0.27 | 0.04E | | | | | | | | | |
| 28 | | 1.10 | | | | | | | | | | |
| 29 | | 1.21 | | | | | | | | | | |
| 30 | | T | | | | | | | | | | |
| 31 | | | 0.01 | | | | | | | | | |
| Totals | 0.00 | 2.93 | 6.18 | 0.16 | 0.21 | 4.30 | 4.95 | 0.12 | 0.02 | 0.00 | 0.00 | 0.00 |
| | | | | | | | | | | Water Year Total: | | 18.87 |

NOTE: All Values are in units of inches, unless otherwise specified.

LEGEND: A - Acculated Total
E - Estimated
T - Trace, unmeasurable amount of rain

# PRECIPITATION

## DAILY RAINFALL SUMMARY

**634C Santa Monica**

Gage Type: Standard Gage

Observation Time: Figures are for a 24-hour period

Latitude 34-00-43 Longitude: 118-29-27 Elevation: 94 Feet

Water Year from 10/01/2019 to 09/30/2020

| Day | Oct | Nov | Dec | Jan | Feb | Mar | Apr | May | Jun | Jul | Aug | Sep |
|---|---|---|---|---|---|---|---|---|---|---|---|---|
| 1 | | | | | | 0.02 | | | | | | |
| 2 | | | | | | 0.02 | | | | | | |
| 3 | | | | | | | | | | | | |
| 4 | | | 1.08 | | | | | | | | | |
| 5 | | | | | | | | | | | | |
| 6 | | | 0.01 | | | | 0.17 | | | | | |
| 7 | | | 0.02 | | | | 0.38 | | | | | |
| 8 | | | 0.09 | | | 0.05 | 0.17 | | | | | |
| 9 | | | | | 0.09 | | 0.56 | | | | | |
| 10 | | | | | | 0.25 | 0.75 | | | | | |
| 11 | | | | | | | | | | | | |
| 12 | | | | | | 0.94 | | | | | | |
| 13 | | | | | | 0.72 | | | | | | |
| 14 | | | | | | 1.30 | | | | | | |
| 15 | | | | | | 0.24 | | | | | | |
| 16 | | | | | | 0.33 | | | | | | |
| 17 | | | | 0.40E | | 0.36 | | | | | | |
| 18 | | | | | | | | 0.15 | | | | |
| 19 | | | | | | 0.07 | | | | | | |
| 20 | | 0.05 | | | | 0.02 | | | | | | |
| 21 | | 0.05 | | | | | | | | | | |
| 22 | | | | | | 0.72 | | | | | | |
| 23 | | | 2.01 | | | 1.15 | | | | | | |
| 24 | | | | | | 0.02 | | | | | | |
| 25 | | | | | | | | | | | | |
| 26 | | | 0.84 | | | | | | | | | |
| 27 | | 0.21 | | | | | | | | | | |
| 28 | | 0.90 | | | | | | | | | | |
| 29 | | 0.23 | | | | | | | | | | |
| 30 | | | | | | | | | | | | |
| 31 | | | | | | | | | | | | |
| Totals | 0.00 | 1.44 | 4.05 | 0.40 | 0.09 | 6.21 | 2.03 | 0.15 | 0.00 | 0.00 | 0.00 | 0.00 |
| | | | | | | | | | | Water Year Total: | | 14.37 |

NOTE: All Values are in units of inches, unless otherwise specified.

LEGEND: A - Acculated Total
E - Estimated
T - Trace, unmeasurable amount of rain

# PRECIPITATION

## DAILY RAINFALL SUMMARY

**662D Long Beach Airport**

Gage Type: Standard Gage

Observation Time: Figures are for a 24-hour period

Latitude 33-49-00 Longitude: 118-09-00 Elevation: 34 Feet

Water Year from 10/01/2019 to 09/30/2020

| Day | Oct | Nov | Dec | Jan | Feb | Mar | Apr | May | Jun | Jul | Aug | Sep |
|---|---|---|---|---|---|---|---|---|---|---|---|---|
| 1 | | | | | | 0.04 | | | | | | |
| 2 | | | | | T | | | | | | | |
| 3 | | | T | | | | | | | | | |
| 4 | | | 0.82 | | | | T | | | | | |
| 5 | | | | | | | 0.14 | | T | | | |
| 6 | | | 0.09 | | | | 0.74 | | | | | |
| 7 | | | T | | | T | 0.82 | | | | | |
| 8 | | | 0.03 | | | | 0.08 | | | | | |
| 9 | | | | T | 0.30 | 0.09 | 0.89 | | | | | |
| 10 | | | | | 0.02 | 0.08 | 0.36 | | | | | |
| 11 | | | | | | T | | | | | | |
| 12 | | | | | | 1.23 | | | | | | |
| 13 | | | | | | 0.50 | | | | | | |
| 14 | | | T | | | 0.01 | | | | | | |
| 15 | | | | | | 0.03 | | | | | | |
| 16 | | | | 0.06 | | 0.27 | | | | | | |
| 17 | | | | 0.15 | | T | | | | | | |
| 18 | | | | | | | | 0.04 | T | | | |
| 19 | | T | | | | 0.03 | | | | | | |
| 20 | | 0.38 | | | | | | | | | | |
| 21 | | T | | 0.10 | T | | | | | | | |
| 22 | | | 0.24 | | 0.01 | 0.71 | | | | | | |
| 23 | | | 1.28 | | | 0.02 | | | | | | |
| 24 | | | | | | T | | | | | | |
| 25 | | | 1.03 | | | T | | | | | | |
| 26 | | | 1.14 | | | | | | | | | |
| 27 | | 0.18 | | | | | | | | | | |
| 28 | | 2.18 | | | | | | | T | | | |
| 29 | | 0.10 | | | T | | | | T | | | |
| 30 | | 0.02 | | | | | | | | | | |
| 31 | | | | | | | | | | | | |
| Totals | 0.00 | 2.86 | 4.63 | 0.31 | 0.33 | 3.01 | 3.03 | 0.04 | 0.00 | 0.00 | 0.00 | 0.00 |
| | | | | | | | | | | Water Year Total: | | 14.21 |

NOTE: All Values are in units of inches, unless otherwise specified.

LEGEND: A - Acculated Total
E - Estimated
T - Trace, unmeasurable amount of rain

# PRECIPITATION

## DAILY RAINFALL SUMMARY

**680B Westwood (U.C.L.A.)**

Gage Type: Standard Gage

Observation Time: Figures are for a 24-hour period

Latitude 34-04-10 Longitude: 118-26-30 Elevation: 430 Feet

Water Year from 10/01/2019 to 09/30/2020

| Day | Oct | Nov | Dec | Jan | Feb | Mar | Apr | May | Jun | Jul | Aug | Sep |
|---|---|---|---|---|---|---|---|---|---|---|---|---|
| 1 | | | 0.01 | | | | | | | | | |
| 2 | | T | | | | 0.01 | | | | | | |
| 3 | | | | | | | | | | | | |
| 4 | | | 1.17 | | | | | | | | | |
| 5 | | | | | | | | | | | | |
| 6 | | | 0.09 | | | | 1.20 | | | | | |
| 7 | | | 0.05 | | | | 0.07 | | | | | |
| 8 | | | 0.20 | | | T | 0.23 | | | | | |
| 9 | | | | | 0.36 | | 0.50 | | | | | |
| 10 | | | | | | 0.19 | 0.53 | | | | | |
| 11 | | | | | | 0.03 | | | | | | |
| 12 | | | | | | 1.32 | | | | | | |
| 13 | | | | | | 1.01 | 0.04 | | | | | |
| 14 | | | | | | 0.21 | | | | | | |
| 15 | | | | | | 0.09 | | | | | | |
| 16 | | | | | | 0.23 | | | | | | |
| 17 | | | | 0.45 | | 0.40 | | | | | | |
| 18 | | | | | | | | 0.12 | | | | |
| 19 | | | | | | 0.03 | | | | | | |
| 20 | | 0.08 | | | | | | | | | | |
| 21 | | 0.02 | | 0.01 | | | | | | | | |
| 22 | | | | | T | T | | | | | | |
| 23 | | | 2.14 | | T | 1.44 | | | | | | |
| 24 | | | | | | | | | | | | |
| 25 | | | | | | | | | | | | |
| 26 | | | 1.61 | | | | | | | | | |
| 27 | | 0.68 | | | | | | | | | | |
| 28 | | 0.98 | | | | | | | | | | |
| 29 | | 0.16 | | | | | | | | | | |
| 30 | | 0.01 | | | | | | | | | | |
| 31 | | | | | | | | | | | | |
| Totals | 0.00 | 1.93 | 5.27 | 0.46 | 0.36 | 4.96 | 2.57 | 0.12 | 0.00 | 0.00 | 0.00 | 0.00 |

Water Year Total: 15.67

NOTE: All Values are in units of inches, unless otherwise specified.

LEGEND: A - Acculated Total
E - Estimated
T - Trace, unmeasurable amount of rain

# PRECIPITATION

## DAILY RAINFALL SUMMARY

**683B Sunset Ridge**

Gage Type: Standard Gage

Observation Time: Figures are for a 24-hour period

Latitude 34-12-53 Longitude: 118-08-47 Elevation: 2110 Feet

Water Year from 10/01/2019 to 09/30/2020

| Day | Oct | Nov | Dec | Jan | Feb | Mar | Apr | May | Jun | Jul | Aug | Sep |
|---|---|---|---|---|---|---|---|---|---|---|---|---|
| 1 | | | 0.07 | | | 0.07 | | | | | | |
| 2 | | | | | | | 0.01 | | | | | |
| 3 | | | | | | | | | | | | |
| 4 | | | 1.02 | | | | | | | | | |
| 5 | | | 0.31 | | | | 0.40 | | 0.06 | | | |
| 6 | | | | | | | 2.47 | | 0.08 | | | |
| 7 | | | 0.30 | | | | 0.21 | | 0.01 | | | |
| 8 | | | 0.65 | | | | 1.35 | | | | | |
| 9 | | | 0.02 | | | | 0.33 | | | | | |
| 10 | | | 0.01 | | 0.05 | 0.22 | 0.78 | | | | | |
| 11 | | | | | | 0.23 | 0.05 | | | | | |
| 12 | | | | | | 0.01 | 0.01 | | | | | |
| 13 | | | | | | 1.91 | 0.56 | | | | | |
| 14 | | | 0.02 | | | 0.30 | 0.01 | | | | | |
| 15 | | | | | 0.45 | 0.45 | | | | | | |
| 16 | | | | | 0.03 | 0.03 | | | | | | |
| 17 | | | | 0.23 | | 1.25 | | | | | | |
| 18 | | | | | | 0.02 | 0.02 | 0.10 | | | | |
| 19 | | | | | | 0.01 | | 0.31 | | | | |
| 20 | | | | | | 0.07 | | | | | | |
| 21 | | 0.17 | | 0.01 | 0.02 | 0.02 | | | | | | |
| 22 | | | | | | | | | | | | |
| 23 | | 0.01 | 1.20 | | 0.10 | 1.15 | | | | | | |
| 24 | | | 0.12 | | 0.01 | 0.01 | | | | | | |
| 25 | | | 0.04 | | | | | | | | | |
| 26 | | | 2.22 | | | | | | | | | |
| 27 | | 0.67 | 0.11 | | | | | | | | | |
| 28 | | 1.03 | 0.01 | | | | | | | | | |
| 29 | | 0.35 | | | | | | | 0.03 | | | |
| 30 | | 0.01 | | | | | | | | | | |
| 31 | | | | | | | | | | | | |
| Totals | 0.00 | 2.24 | 6.10 | 0.24 | 0.66 | 5.75 | 6.20 | 0.41 | 0.18 | 0.00 | 0.00 | 0.00 |
| | | | | | | | | | | Water Year Total: | | 21.78 |

NOTE: All Values are in units of inches, unless otherwise specified.

LEGEND: A - Acculated Total
E - Estimated
T - Trace, unmeasurable amount of rain

# PRECIPITATION

## DAILY RAINFALL SUMMARY

**734C Los Angeles International Airport**

Gage Type: Standard Gage Observation Time: Figures are for a 24-hour period

Latitude 33-56-25 Longitude: 118-23-44 Elevation: 105 Feet

Water Year from 10/01/2019 to 09/30/2020

| Day | Oct | Nov | Dec | Jan | Feb | Mar | Apr | May | Jun | Jul | Aug | Sep |
|---|---|---|---|---|---|---|---|---|---|---|---|---|
| 1 | | | | | | T | | | | | | |
| 2 | | | | | | | | | | | | |
| 3 | | | T | | | | | | | | | |
| 4 | | | 0.98 | | | | | | | | | |
| 5 | | | | | | | 0.06 | | | | | |
| 6 | | | 0.05 | | | | 1.22 | | | | | |
| 7 | | | T | | | 0.01 | 0.26 | | | | | |
| 8 | | | 0.05 | | | T | 0.01 | | | | | |
| 9 | | | | T | T | 0.06 | 0.88 | | | | | |
| 10 | | | | | T | 0.11 | 0.23 | T | | | | |
| 11 | | | | | | T | | | | | | |
| 12 | | | | | | 1.06 | 0.02 | | | | | |
| 13 | | | | | | 0.55 | T | | | | | |
| 14 | | | | | | 0.08 | | | | | | |
| 15 | | | | | | 0.08 | | | | | | |
| 16 | | | | 0.26 | | 0.36 | | | | | | |
| 17 | | | | 0.07 | | 0.05 | | | | | | |
| 18 | | | | | | | T | 0.12 | | | | |
| 19 | | 0.01 | | T | | 0.02 | | | | | | |
| 20 | | 0.35 | | 0.02 | | T | | | | | | |
| 21 | | 0.01 | | 0.03 | T | | | | | | | |
| 22 | | | 0.99 | | T | 1.73 | | | | | | |
| 23 | | | 0.85 | | | T | | | | | | |
| 24 | | | | | | T | | | | | | |
| 25 | | | 1.13 | | | | | | | | | |
| 26 | | | 0.37 | | | | | | | | | |
| 27 | | 0.27 | | | | | | | | | | |
| 28 | | 0.78 | | | | | | | T | | | |
| 29 | | 0.01 | | | | | | | | | | |
| 30 | | T | T | | | | | | | | | |
| 31 | | | | | | | | | | | | |
| Totals | 0.00 | 1.43 | 4.42 | 0.38 | 0.00 | 4.11 | 2.68 | 0.12 | 0.00 | 0.00 | 0.00 | 0.00 |
| | | | | | | | | | | Water Year Total: | | 13.14 |

NOTE: All Values are in units of inches, unless otherwise specified.

LEGEND: A - Acculated Total
E - Estimated
T - Trace, unmeasurable amount of rain

# PRECIPITATION

## DAILY RAINFALL SUMMARY

**742C San Gabriel Fire Department**

Gage Type: Standard Gage

Observation Time: Figures are for a 24-hour period

Latitude 34-06-11 Longitude: 118-05-56 Elevation: 445 Feet

Water Year from 10/01/2019 to 09/30/2020

| Day | Oct | Nov | Dec | Jan | Feb | Mar | Apr | May | Jun | Jul | Aug | Sep |
|---|---|---|---|---|---|---|---|---|---|---|---|---|
| 1 | | | 0.02E | | | | | | | | | |
| 2 | | | | | | | | | | | | |
| 3 | | | | | | | | | | | | |
| 4 | | | 0.78E | | | | | | | | | |
| 5 | | | 0.37E | | | | | | | | | |
| 6 | | | | | | | 0.90 | | | | | |
| 7 | | | 0.12E | | | | 0.50 | | | | | |
| 8 | | | 0.11E | | | | 0.20 | | | | | |
| 9 | | | 0.02E | | | | 0.70 | | | | | |
| 10 | | | | | | 0.22 | 0.60 | | | | | |
| 11 | | | | | | 0.13 | | | | | | |
| 12 | | | | | | 0.08 | | | | | | |
| 13 | | | | | | 2.00 | | | | | | |
| 14 | | | | | | 0.49 | | | | | | |
| 15 | | | | | | 0.14E | | | | | | |
| 16 | | | | 0.25 | | | | | | | | |
| 17 | | | | | | A | | | | | | |
| 18 | | | | | | | | | | | | |
| 19 | | | | | | | | 0.34 | | | | |
| 20 | | | | | | 0.75A | | | | | | |
| 21 | | 0.37E | | | | | | | | | | |
| 22 | | 0.02E | | | | 0.63 | | | | | | |
| 23 | | | 1.17E | | | 0.21E | | | | | | |
| 24 | | | 0.12E | | | | | | | | | |
| 25 | | | | | | | | | | | | |
| 26 | | | 2.51E | | | | | | | | | |
| 27 | | | | | | | | | | | | |
| 28 | | 1.41E | | | | | | | | | | |
| 29 | | 0.67E | | | | | | | | | | |
| 30 | | | | | | | | | | | | |
| 31 | | | | | | | | | | | | |
| Totals | 0.00 | 2.47 | 5.22 | 0.25 | 0.00 | 4.65 | 2.90 | 0.34 | 0.00 | 0.00 | 0.00 | 0.00 |
| | | | | | | | | | | Water Year Total: | | 15.83 |

NOTE: All Values are in units of inches, unless otherwise specified.

LEGEND: A - Acculated Total
E - Estimated
T - Trace, unmeasurable amount of rain

# PRECIPITATION

## DAILY RAINFALL SUMMARY

**747 Sandberg-Airways Station**

Gage Type: Standard Gage

Observation Time: Figures are for a 24-hour period

Latitude 34-44-47 Longitude: 118-43-29 Elevation: 4517 Feet

Water Year from 10/01/2019 to 09/30/2020

| Day | Oct | Nov | Dec | Jan | Feb | Mar | Apr | May | Jun | Jul | Aug | Sep |
|---|---|---|---|---|---|---|---|---|---|---|---|---|
| 1 | | | T | | | 0.05 | | | | | | |
| 2 | | | | | T | | | | | | | |
| 3 | | | 0.01 | | | | | | | | | |
| 4 | | | 1.12 | | | | | | | | | |
| 5 | | | 0.01 | T | | | 0.51 | | T | | | |
| 6 | | | 0.12 | | | | 0.65 | | | | | |
| 7 | | | 0.14 | | | | 1.08 | | | | | |
| 8 | | | 0.16 | T | | | 0.13 | | | | | |
| 9 | | | | 0.01 | | | 0.70 | | | | | |
| 10 | | | | T | | 0.64 | 0.62 | | | | | |
| 11 | | | | | | 0.30 | | | | | | |
| 12 | | | | T | | 0.65 | | | | | | |
| 13 | | | | T | | 0.23 | 0.01 | | | | | |
| 14 | | | 0.01 | | | 0.06 | | T | | | | |
| 15 | | | 0.01 | | | 0.03 | | | | | | |
| 16 | | | | 0.07 | | 1.42 | | | | | | |
| 17 | | | | | | 0.02 | | | | | | |
| 18 | | | | | | | 0.01 | 0.03 | | | | |
| 19 | | | | | | T | | | | | | |
| 20 | | 0.97 | | 0.02 | | T | T | | | | | |
| 21 | | T | | | T | 0.01 | 0.01 | | | | | |
| 22 | | | 0.33 | | 0.18 | 0.67 | | | | | | |
| 23 | | | 0.53 | | | 0.03 | | | | | | |
| 24 | | | | | | | | | | | | |
| 25 | | | 0.93 | | | 0.21 | | | | | | |
| 26 | | | 0.92 | T | | T | | | | | | |
| 27 | | 0.38 | | | | | | | | | | |
| 28 | | 1.04 | | | | | | | 0.02 | | | |
| 29 | | | | T | | | | | | | | |
| 30 | | 0.32 | 0.05 | | | | | | | | | |
| 31 | | | | | | | | | | | | |
| Totals | 0.00 | 2.71 | 4.34 | 0.10 | 0.18 | 4.32 | 3.72 | 0.03 | 0.02 | 0.00 | 0.00 | 0.00 |

Water Year Total: 15.42

NOTE: All Values are in units of inches, unless otherwise specified.

LEGEND: A - Acculated Total
E - Estimated
T - Trace, unmeasurable amount of rain

# PRECIPITATION

## DAILY RAINFALL SUMMARY

**749B Burbank Valley Pump Plant**

Gage Type: Standard Gage

Observation Time: Figures are for a 24-hour period

Latitude 34-11-11 Longitude: 118-20-54 Elevation: 655 Feet

Water Year from 10/01/2019 to 09/30/2020

| Day | Oct | Nov | Dec | Jan | Feb | Mar | Apr | May | Jun | Jul | Aug | Sep |
|---|---|---|---|---|---|---|---|---|---|---|---|---|
| 1 | | | | | | | | | | | | |
| 2 | | | | | | | | | | | | |
| 3 | | | 0.55 | | | | | | | | | |
| 4 | | | 0.44 | | | | | | | | | |
| 5 | | | 0.01 | | | | 1.05 | | | | | |
| 6 | | | 0.11 | | | | 0.45 | | | | | |
| 7 | | | 0.10 | | | | 1.40 | | | | | |
| 8 | | | 0.40 | | | | 0.12 | | | | | |
| 9 | | | | | | 0.18 | 0.94 | | | | | |
| 10 | | | | | | 0.28 | 0.07 | | | | | |
| 11 | | | | | | | | | | | | |
| 12 | | | | | | 2.25 | 0.05 | | | | | |
| 13 | | | | | | 0.24 | | | | | | |
| 14 | | | | | | 0.15 | | | | | | |
| 15 | | | | | | 0.03 | | | | | | |
| 16 | | | | 0.17 | | 0.63 | | | | | | |
| 17 | | | | | | | | | | | | |
| 18 | | | | | | | | 0.26E | | | | |
| 19 | | | | | | | | | | | | |
| 20 | | 0.26 | | | | | | | | | | |
| 21 | | | | | | | | | | | | |
| 22 | | | 1.12 | | 0.02 | 0.93 | | | | | | |
| 23 | | | 0.08 | | | 0.02 | | | | | | |
| 24 | | | | | | | | | | | | |
| 25 | | | 1.92 | | | | | | | | | |
| 26 | | | 0.04 | | | | | | | | | |
| 27 | | 1.05 | | | | | | | | | | |
| 28 | | 1.02 | | | | | | | | | | |
| 29 | | | | | | | | | | | | |
| 30 | | 0.06 | | | | | | | | | | |
| 31 | | | | | | | | | | | | |
| Totals | 0.00 | 2.39 | 4.77 | 0.17 | 0.02 | 4.71 | 4.08 | 0.26 | 0.00 | 0.00 | 0.00 | 0.00 |
| | | | | | | | | | | Water Year Total: | | 16.40 |

NOTE: All Values are in units of inches, unless otherwise specified.

LEGEND: A - Acculated Total
E - Estimated
T - Trace, unmeasurable amount of rain

# PRECIPITATION

## DAILY RAINFALL SUMMARY

**750B Palmdale-F.A.A. Airport**

Gage Type: Standard Gage

Observation Time: Figures are for a 24-hour period

Latitude 34-37-20 Longitude: 118-05-00 Elevation: 2528 Feet

Water Year from 10/01/2019 to 09/30/2020

| Day | Oct | Nov | Dec | Jan | Feb | Mar | Apr | May | Jun | Jul | Aug | Sep |
|---|---|---|---|---|---|---|---|---|---|---|---|---|
| 1 | | | | | | 0.03 | | | | | | |
| 2 | | | | | | | | | | | | |
| 3 | | | | | | | | | | | | |
| 4 | | | 0.72 | | | | | | | | | |
| 5 | | | | | | | T | | | | | |
| 6 | | | 0.02 | | | | 0.36 | | | | | |
| 7 | | | 0.01 | | | | 0.42 | | | | | |
| 8 | | | 0.38 | | | | 0.15 | | | | | |
| 9 | | | | | T | T | 0.65 | | | | | |
| 10 | | | | | T | 0.30 | 0.45 | | | | | |
| 11 | | | | | | | | | | | | |
| 12 | | | | | | 1.49 | | | | | | |
| 13 | | | | | | 0.47 | | | | | T | |
| 14 | | | | | | | | | | | | |
| 15 | | | | | | T | | | | | T | |
| 16 | | | | 0.03 | | 0.02 | | | | | | |
| 17 | | | | T | | T | | | | | | |
| 18 | | | | | | | | T | T | | T | |
| 19 | | | | | | | | | | | 0.07 | |
| 20 | | 0.21 | | T | | | | | | | | |
| 21 | | | | 0.01 | | T | | | | | | |
| 22 | | | 0.01 | | 0.04 | 0.45 | | | | | | |
| 23 | | | 0.21 | | | 0.03 | | | | | | |
| 24 | | | | | | | | | | | | |
| 25 | | T | T | | | T | | | | | | |
| 26 | | | 1.26 | | | | | | | | | |
| 27 | | 0.16 | | | | T | | | | | | |
| 28 | | 0.51 | | | | | | | | | | |
| 29 | | | | | | | | | | | | |
| 30 | | 0.22 | 0.01 | | | | | | | | | |
| 31 | | | | | | | | | | | | |
| Totals | 0.00 | 1.10 | 2.62 | 0.04 | 0.04 | 2.79 | 2.03 | 0.00 | 0.00 | 0.00 | 0.07 | 0.00 |
| | | | | | | | | | | Water Year Total: | | 8.69 |

NOTE: All Values are in units of inches, unless otherwise specified.

LEGEND: A - Acculated Total
E - Estimated
T - Trace, unmeasurable amount of rain

# PRECIPITATION

## DAILY RAINFALL SUMMARY

**795 Pasadena-Jourdan**

Gage Type: Standard Gage

Observation Time: Figures are for a 24-hour period

Latitude 34-08-52 Longitude: 118-05-14 Elevation: 705 Feet

Water Year from 10/01/2019 to 09/30/2020

| Day | Oct | Nov | Dec | Jan | Feb | Mar | Apr | May | Jun | Jul | Aug | Sep |
|---|---|---|---|---|---|---|---|---|---|---|---|---|
| 1 | | | 0.04 | | | 0.05 | | | | | | |
| 2 | | | 0.01 | | | | | | | | | |
| 3 | | | | | | | | | | | | |
| 4 | | | 0.98 | | | | | | | | | |
| 5 | | | 0.16 | | | | | | | | | |
| 6 | | | | | | | 2.22 | | | | | |
| 7 | | | 0.12 | | | | 0.11 | | | | | |
| 8 | | | 0.11 | | | | 0.77 | | | | | |
| 9 | | | 0.02 | | | | 0.22 | | | | | |
| 10 | | | | | 0.15 | 0.20 | 0.69 | | | | | |
| 11 | | | | | | 0.23 | 0.05 | | | | | |
| 12 | | | | | | | | | | | | |
| 13 | | | | | | 1.75 | 0.18 | | | | | |
| 14 | | | 0.01 | | | 0.24 | | | | | | |
| 15 | | | | | | 0.15 | | | | | | |
| 16 | | | | | | 0.07 | | | | | | |
| 17 | | | | 0.20 | | 0.73 | | | | | | |
| 18 | | | | | | 0.01 | | | | | | |
| 19 | | | | | | 0.22 | | 0.33 | | | | |
| 20 | | | | | | 0.02 | | | | | | |
| 21 | | 0.22 | | 0.02 | | | | | | | | |
| 22 | | 0.07 | | | | | | | | | | |
| 23 | | | 1.11 | | 0.01 | 0.74 | | | | | | |
| 24 | | | 0.10 | | | | | | | | | |
| 25 | | | | | | | | | | | | |
| 26 | | | 2.11 | | | | | | | | | |
| 27 | | | 0.01 | | | | | | | | | |
| 28 | | 1.75 | | | | | | | | | | |
| 29 | | 0.43 | | | | | | | 0.02 | | | |
| 30 | | | | | | | | | | | | |
| 31 | | | | | | | | | | | | |
| Totals | 0.00 | 2.47 | 4.78 | 0.22 | 0.16 | 4.41 | 4.24 | 0.33 | 0.02 | 0.00 | 0.00 | 0.00 |

Water Year Total: 16.63

NOTE: All Values are in units of inches, unless otherwise specified.

LEGEND: A - Acculated Total
E - Estimated
T - Trace, unmeasurable amount of rain

# PRECIPITATION

## DAILY RAINFALL SUMMARY

**1037 Arcadia-Arboretum**

Gage Type: Standard Gage

Observation Time: Figures are for a 24-hour period

Latitude 34-08-48 Longitude: 118-02-59 Elevation: 565 Feet

Water Year from 10/01/2019 to 09/30/2020

| Day | Oct | Nov | Dec | Jan | Feb | Mar | Apr | May | Jun | Jul | Aug | Sep |
|---|---|---|---|---|---|---|---|---|---|---|---|---|
| 1 | | | | | | 0.12 | | | | | | |
| 2 | | | | | | | | | | | | |
| 3 | | | | | | | | | | | | |
| 4 | | | 1.00 | | 0.01 | | | | | | | |
| 5 | | | 0.36 | | | | A | | 0.01 | | | |
| 6 | | | | | | | 1.53A | | | | | |
| 7 | | | 0.18 | | | | 0.81 | | | | | |
| 8 | | | 0.17 | | | | 0.68 | | | | | |
| 9 | | | | | 0.09 | | 0.41 | | | | | |
| 10 | | | | | | 0.28 | A | | | | | |
| 11 | | | | | | A | A | | | | | |
| 12 | | | | | | A | A | | | | | |
| 13 | | | | | | 1.95A | 1.05A | | | | | |
| 14 | | | | | | 0.33 | | | | | | |
| 15 | | | | | | A | | | | | | |
| 16 | | | | | | A | | | | | | |
| 17 | | | | 0.17 | | 0.98A | | | | | | |
| 18 | | | | | | | | 0.25 | | | | |
| 19 | | | | | | A | | | | | | |
| 20 | | | | | | 0.15A | | | | | | |
| 21 | | 0.31 | | 0.02 | | | | | | | | |
| 22 | | | | | 0.01 | | | | | | | |
| 23 | | | 1.07 | | | 0.64 | | | | | | |
| 24 | | | 0.17 | | | | | | | | | |
| 25 | | | | | | | | | | | | |
| 26 | | | 2.01 | | | | | | | | | |
| 27 | | | | | | | | | | | | |
| 28 | | 1.46 | | | | | | | | | | |
| 29 | | 0.64 | | | | | | | 0.03 | | | |
| 30 | | 0.03 | | | | | | | | | | |
| 31 | | | | | | | | | | | | |
| Totals | 0.00 | 2.44 | 4.96 | 0.19 | 0.11 | 4.45 | 4.48 | 0.25 | 0.04 | 0.00 | 0.00 | 0.00 |
| | | | | | | | | | | Water Year Total: | | 16.92 |

NOTE: All Values are in units of inches, unless otherwise specified.

LEGEND: A - Acculated Total
E - Estimated
T - Trace, unmeasurable amount of rain

# PRECIPITATION

## DAILY RAINFALL SUMMARY

**1041B Santa Fe Dam**

Gage Type: Standard Gage

Observation Time: Figures are for a 24-hour period

Latitude 34-07-04 Longitude: 117-58-24 Elevation: 427 Feet

Water Year from 10/01/2019 to 09/30/2020

| Day | Oct | Nov | Dec | Jan | Feb | Mar | Apr | May | Jun | Jul | Aug | Sep |
|---|---|---|---|---|---|---|---|---|---|---|---|---|
| 1 | | | 0.01 | | | | | | | | | |
| 2 | | | | | | | | | | | | |
| 3 | | | | | | | | | | | | |
| 4 | | | 1.44 | | | | | | | | | |
| 5 | | | 0.03 | | | | 0.02 | | | | | |
| 6 | | | 0.02 | | | | 1.51 | | | | | |
| 7 | | | 0.09 | | | | 0.35 | | | | | |
| 8 | | | 0.07 | | | | 0.40 | | | | | |
| 9 | | | | | 0.03 | | 0.88 | | | | | |
| 10 | | | | | | 0.41 | 0.50 | | | | | |
| 11 | | | | | | | | | | | | |
| 12 | | | | | | 1.14 | 0.03 | | | | | |
| 13 | | | | | | 0.63 | 0.02 | | | | | |
| 14 | | | | | | 0.08 | | | | | | |
| 15 | | | | | | 0.07 | | | | | | |
| 16 | | | | | | 0.01 | | | | | | |
| 17 | | | | 0.16 | | 0.67 | | | | | | |
| 18 | | | | | | | | 0.30 | 0.01 | | | |
| 19 | | | | | | 0.13 | | | | | | |
| 20 | | 0.99 | | | | 0.26 | | | | | | |
| 21 | | | | | | | | | | | | |
| 22 | | | | | | | | | | | | |
| 23 | | | 1.23 | | | 0.94 | | | | | | |
| 24 | | | 0.10 | | | | | | | | | |
| 25 | | | | | | | | | | | | |
| 26 | | | 2.12 | | | | | | | | | |
| 27 | | 0.53 | | | | | | | | | | |
| 28 | | 1.57 | | | | | | | | | | |
| 29 | | 0.13 | | | | | | | | | | |
| 30 | | | | | | | | | | | | |
| 31 | | | | | | | | | | | | |
| Totals | 0.00 | 3.22 | 5.11 | 0.16 | 0.03 | 4.34 | 3.71 | 0.30 | 0.01 | 0.00 | 0.00 | 0.00 |
| | | | | | | | | | | Water Year Total: | | 16.88 |

NOTE: All Values are in units of inches, unless otherwise specified.

LEGEND: A - Acculated Total
E - Estimated
T - Trace, unmeasurable amount of rain

# PRECIPITATION

## DAILY RAINFALL SUMMARY

**1051B Canoga Park-Pierce College**

Gage Type: Standard Gage

Observation Time: Figures are for a 24-hour period

Latitude 34-10-51 Longitude: 118-34-23 Elevation: 800 Feet

Water Year from 10/01/2019 to 09/30/2020

| Day | Oct | Nov | Dec | Jan | Feb | Mar | Apr | May | Jun | Jul | Aug | Sep |
|---|---|---|---|---|---|---|---|---|---|---|---|---|
| 1 | | | 0.05 | | | | | | | | | |
| 2 | | | | | | 0.02 | | | | | | |
| 3 | | | | | | | | | | | | |
| 4 | | | 1.03 | | | | | | | | | |
| 5 | | | | | | | | | | | | |
| 6 | | | 0.05 | | | | 1.47 | | | | | |
| 7 | | | 0.16 | | | | 0.14 | | | | | |
| 8 | | | 0.14 | | | | 0.37 | | | | | |
| 9 | | | | | | | 0.78 | | | | | |
| 10 | | | | | 0.01 | 0.35 | 0.61 | | | | | |
| 11 | | | | | | 0.25 | 0.01 | | | | | |
| 12 | | | | | | 0.88 | | | | | | |
| 13 | | | | | | 1.77 | | | | | | |
| 14 | | | | | | 0.08 | | | | | | |
| 15 | | | | | | 0.19 | | | | | | |
| 16 | | | | | | 0.31 | | | | | | |
| 17 | | | | 0.11 | | 0.85 | | | | | | |
| 18 | | | | | T | | | 0.17 | | | | |
| 19 | | | | | | 0.05 | | | | | | |
| 20 | | 0.01 | | | | 0.03 | | | | | | |
| 21 | | | | | | | | | | | | |
| 22 | | | | | 0.32 | | | | | | | |
| 23 | | | 1.74 | | 0.01 | 1.28 | | | | | | |
| 24 | | | 0.01 | | | | | | | | | |
| 25 | | | | | | | | | | | | |
| 26 | | | 2.20 | | | | | | | | | |
| 27 | | 0.44 | | | | | | | | | | |
| 28 | | 1.17 | | | | | | | | | | |
| 29 | | 0.40 | | | | | | | | | | |
| 30 | | 0.02 | | | | | | | | | | |
| 31 | | | | | | | | | | | | |
| Totals | 0.00 | 2.04 | 5.38 | 0.11 | 0.34 | 6.06 | 3.38 | 0.17 | 0.00 | 0.00 | 0.00 | 0.00 |

Water Year Total: 17.48

NOTE: All Values are in units of inches, unless otherwise specified.

LEGEND: A - Acculated Total
E - Estimated
T - Trace, unmeasurable amount of rain

# PRECIPITATION

## DAILY RAINFALL SUMMARY

**1081B Glendale-Gregg**

Gage Type: Standard Private

Observation Time: Figures are for a 24-hour period

Latitude 34-11-45 Longitude: 118-14-30 Elevation: 1350 Feet

Water Year from 10/01/2019 to 09/30/2020

| Day | Oct | Nov | Dec | Jan | Feb | Mar | Apr | May | Jun | Jul | Aug | Sep |
|---|---|---|---|---|---|---|---|---|---|---|---|---|
| 1 | | | | | | 0.11 | | | | | | |
| 2 | | | | | | | | | | | | |
| 3 | | | | | | | | | | | | |
| 4 | | | 1.12 | | | | | | | | | |
| 5 | | | 0.07 | | | | 0.10 | | 0.02 | | | |
| 6 | | | | | | | 2.50 | | 0.07 | | | |
| 7 | | | 0.24 | | | | 0.18 | | | | | |
| 8 | | | 0.47 | | | | 1.19 | | | | | |
| 9 | | | | | 0.18 | | 0.64 | | | | | |
| 10 | | | | | | 0.37 | 0.56 | | | | | |
| 11 | | | | | | 0.20 | T | | | | | |
| 12 | | | | | | 1.03 | 0.09 | | | | | |
| 13 | | | | | | 1.37 | 0.31 | | | | | |
| 14 | | | 0.01 | | | 0.30 | | | | | | |
| 15 | | | | | | 0.10 | | | | | | |
| 16 | | | | | | 0.11 | | | | | | |
| 17 | | | | 0.30 | | 0.59 | T | | | | | |
| 18 | | | | | | | 0.01 | 0.62 | | | | |
| 19 | | | | | | 0.17 | | | | | | |
| 20 | | 0.13 | | | | | | | | | | |
| 21 | | | | T | | | | | | | | |
| 22 | | | | | T | 0.05 | | | | | | |
| 23 | | | 1.18 | | 0.04 | 1.24 | | | | | | |
| 24 | | | | | | | | | | | | |
| 25 | | | 0.18 | | | | | | | | | |
| 26 | | | 2.50 | | | | | | | | | |
| 27 | | 0.62 | | | | | | | | | | |
| 28 | | 0.90 | | | | | | | | | | |
| 29 | | 0.27 | | | | | | | | | | |
| 30 | | 0.06 | | | | | | | | | | |
| 31 | | | | | | | | | | | | |
| Totals | 0.00 | 1.98 | 5.77 | 0.30 | 0.22 | 5.64 | 5.58 | 0.62 | 0.09 | 0.00 | 0.00 | 0.00 |
| | | | | | | | | | | Water Year Total: | | 20.20 |

NOTE: All Values are in units of inches, unless otherwise specified.

LEGEND: A - Acculated Total
E - Estimated
T - Trace, unmeasurable amount of rain

# PRECIPITATION

## DAILY RAINFALL SUMMARY

**1088B La Habra Heights-Mutual Water Co.**

Gage Type: Standard Gage

Observation Time: Figures are for a 24-hour period

Latitude 33-56-55 Longitude: 117-57-51 Elevation: 445 Feet

Water Year from 10/01/2019 to 09/30/2020

| Day | Oct | Nov | Dec | Jan | Feb | Mar | Apr | May | Jun | Jul | Aug | Sep |
|---|---|---|---|---|---|---|---|---|---|---|---|---|
| 1 | | | 0.02E | | | 0.17 | | | | | | |
| 2 | | | | | | | | | | | | |
| 3 | | | | | | | | | | | | |
| 4 | | | 0.38 | | | | | | | | | |
| 5 | | | 0.73 | | | | | | | | | |
| 6 | | | | | | | 0.65 | | 0.02 | | | |
| 7 | | | A | | | | 0.55 | | | | | |
| 8 | | | A | | | | 0.53 | | | | | |
| 9 | | | 0.52A | 0.10 | | | 0.20 | | | | | |
| 10 | | | | | 0.01 | 0.20 | 0.86 | | | | | |
| 11 | | | | | | 0.20 | 0.10 | | | | | |
| 12 | | | | | | 0.01 | | | | | | |
| 13 | | | | | | 1.69 | 0.04 | | | | | |
| 14 | | | 0.02 | | | 0.10 | | | | | | |
| 15 | | | | | | 0.15 | | | | | | |
| 16 | | | | | | 0.01 | | | | | | |
| 17 | | | | 0.20 | | 0.45E | | | | | | |
| 18 | | | | | | | 0.09 | | | | | |
| 19 | | | | | | | 0.02 | 0.30 | | | | |
| 20 | | | | | | 0.30 | | | | | | |
| 21 | | 0.33 | | T | | | | | | | | |
| 22 | | | | | | | | | | | | |
| 23 | | | 0.90 | | 0.20E | 0.74 | | | | | | |
| 24 | | | 0.18 | | | | | | | | | |
| 25 | | | | | | | | | | | | |
| 26 | | | 2.00 | | | | | | | | | |
| 27 | | | | | | | | | | | | |
| 28 | | 1.19E | | | | | | | | | | |
| 29 | | 1.01E | | | | | | | | | | |
| 30 | | 0.06 | | | | | | | | | | |
| 31 | | | | | | | | | | | | |
| Totals | 0.00 | 2.59 | 4.75 | 0.30 | 0.21 | 4.02 | 3.04 | 0.30 | 0.02 | 0.00 | 0.00 | 0.00 |
| | | | | | | | | | | Water Year Total: | | 15.23 |

NOTE: All Values are in units of inches, unless otherwise specified.

LEGEND: A - Acculated Total
E - Estimated
T - Trace, unmeasurable amount of rain

# PRECIPITATION

## DAILY RAINFALL SUMMARY

**1095 Orange County Reservoir**

Gage Type: Standard Gage

Observation Time: Figures are for a 24-hour period

Latitude 33-56-07 Longitude: 117-52-58 Elevation: 660 Feet

Water Year from 10/01/2019 to 09/30/2020

| Day | Oct | Nov | Dec | Jan | Feb | Mar | Apr | May | Jun | Jul | Aug | Sep |
|---|---|---|---|---|---|---|---|---|---|---|---|---|
| 1 | | | | | | | | | | | | |
| 2 | | | | | | | | | | | | |
| 3 | | | | | | | | | | | | |
| 4 | | | 1.14 | | | | | | | | | |
| 5 | | | 0.07 | | | | 0.09 | | | | | |
| 6 | | | 0.12 | | | | 1.20 | | 0.01 | | | |
| 7 | | | 0.05 | | | | 0.35 | | | | | |
| 8 | | | 0.43 | | | | 0.35 | | | | | |
| 9 | | | 0.01 | | 0.01 | | 0.82 | | | | | |
| 10 | | | | | | 0.40 | 0.52 | | | | | |
| 11 | | | | | | | | | | | | |
| 12 | | | | | | 1.21 | 0.01 | | | | | |
| 13 | | | | | | 0.70 | 0.03 | | | | | |
| 14 | | | | | | 0.05 | | | | | | |
| 15 | | | | | | 0.08 | | | | | | |
| 16 | | | | | | | | | | | | |
| 17 | | | | 0.17 | | 0.40 | | | | | | |
| 18 | | | | | | | | 0.16 | | | | |
| 19 | | | | | | | | | | | | |
| 20 | | 0.07 | | | | 0.06 | | | | | | |
| 21 | | 0.01 | | | | | | | | | | |
| 22 | | | | | 0.02 | | | | | | | |
| 23 | | | 1.03 | | 0.06 | 0.86 | | | | | | |
| 24 | | | 0.05 | | | | | | | | | |
| 25 | | | | | | | | | | | | |
| 26 | | | 2.00 | | | | | | | | | |
| 27 | | 0.59 | | | | | | | | | | |
| 28 | | 1.52 | | | | | | | | | | |
| 29 | | 0.20 | | | | | | | | | | |
| 30 | | 0.07 | | | | | | | | | | |
| 31 | | | | | | | | | | | | |
| Totals | 0.00 | 2.46 | 4.90 | 0.17 | 0.09 | 3.76 | 3.37 | 0.16 | 0.01 | 0.00 | 0.00 | 0.00 |
| | | | | | | | | | | Water Year Total: | | 14.92 |

NOTE: All Values are in units of inches, unless otherwise specified.

LEGEND: A - Acculated Total
E - Estimated
T - Trace, unmeasurable amount of rain

# PRECIPITATION

## DAILY RAINFALL SUMMARY

**1114B Whittier Narrows Dam**

Gage Type: Standard Gage

Observation Time: Figures are for a 24-hour period

Latitude 34-01-29 Longitude: 118-05-02 Elevation: 239 Feet

Water Year from 10/01/2019 to 09/30/2020

| Day | Oct | Nov | Dec | Jan | Feb | Mar | Apr | May | Jun | Jul | Aug | Sep |
|---|---|---|---|---|---|---|---|---|---|---|---|---|
| 1 | | | | | | | | | | | | |
| 2 | | | | | | | | | | | | |
| 3 | | | | | | | | | | | | |
| 4 | | | 1.19 | | | | | | | | | |
| 5 | | | 0.02 | | | | | | | | | |
| 6 | | | 0.02 | | | | 0.93 | | | | | |
| 7 | | | 0.08 | | | | 0.21 | | | | | |
| 8 | | | 0.11 | | | | 0.65 | | | | | |
| 9 | | | | | | | 0.67 | | | | | |
| 10 | | | | | | 0.20 | 0.39 | | | | | |
| 11 | | | | | | | | | | | | |
| 12 | | | | | | 1.35 | | | | | | |
| 13 | | | | | | 0.49 | | | | | | |
| 14 | | | | | | 0.08 | | | | | | |
| 15 | | | | | | 0.03 | | | | | | |
| 16 | | | | | | 0.03 | | | | | | |
| 17 | | | | 0.27 | | 0.32 | | | | | | |
| 18 | | | | | | | | 0.25 | | | | |
| 19 | | | | | | 0.10 | | | | | | |
| 20 | | 0.44 | | | | 0.09 | | | | | | |
| 21 | | | | 0.02 | | | | | | | | |
| 22 | | | | | 0.02 | | | | | | | |
| 23 | | | 1.32 | | | 0.66 | | | | | | |
| 24 | | | 0.02 | | | | | | | | | |
| 25 | | | | | | | | | | | | |
| 26 | | | 2.77 | | | | | | | | | |
| 27 | | 0.35 | | | | | | | | | | |
| 28 | | 1.56 | | | | | | | | | | |
| 29 | | 0.10 | | | | | | | | | | |
| 30 | | | | | | | | | | | | |
| 31 | | | | | | | | | | | | |
| Totals | 0.00 | 2.45 | 5.53 | 0.29 | 0.02 | 3.35 | 2.85 | 0.25 | 0.00 | 0.00 | 0.00 | 0.00 |

Water Year Total: 14.74

NOTE: All Values are in units of inches, unless otherwise specified.

LEGEND: A - Acculated Total
E - Estimated
T - Trace, unmeasurable amount of rain

# PRECIPITATION

## DAILY RAINFALL SUMMARY

**1115 San Antonio Dam**

Gage Type: Standard Gage

Observation Time: Figures are for a 24-hour period

Latitude 34-09-24 Longitude: 117-40-20 Elevation: 2120 Feet

Water Year from 10/01/2019 to 09/30/2020

| Day | Oct | Nov | Dec | Jan | Feb | Mar | Apr | May | Jun | Jul | Aug | Sep |
|---|---|---|---|---|---|---|---|---|---|---|---|---|
| 1 | | | | | | 0.10 | | | | | | |
| 2 | | | | | | 0.02 | 0.01 | | | | | |
| 3 | | | | | 0.04 | | | | | | | |
| 4 | | | 1.76 | | | | | | | | | |
| 5 | | | 0.22 | | | | 0.20 | | | | | |
| 6 | | | 0.03 | | | | 2.07 | | | | | |
| 7 | | | 0.23 | | | | 0.58 | | | | | |
| 8 | | | 0.39 | | | | 0.89 | | | | | |
| 9 | | | | | | | 0.70 | | | | | |
| 10 | | | | | | 0.52 | 0.66 | | | | | |
| 11 | | | | | | 0.03 | | | | | | |
| 12 | | | | | | 1.40 | 0.19 | | | | | |
| 13 | | | | | | 0.63 | 0.41 | | | | | |
| 14 | | | | | | 0.04 | | | | | | |
| 15 | | | | | | 0.03 | | | | | | |
| 16 | | | | | | | | | | | | |
| 17 | | | | 0.17 | | 0.48 | | | | | | |
| 18 | | | | | | | | 0.15 | | | | |
| 19 | | | | | | 0.24 | | | | | | |
| 20 | | 0.44 | | | | 0.35 | | | | | | |
| 21 | | 0.05 | | | | | | | | | | |
| 22 | | | | | 0.05 | | | | | | | |
| 23 | | | 0.93 | | 0.15 | 0.85 | | | | | | |
| 24 | | | 0.14 | | | | | | | | | |
| 25 | | | 0.13 | | | | | | | | | |
| 26 | | | 2.55 | | | | | | | | | |
| 27 | | 0.90 | | | | | | | | | | |
| 28 | | 1.69 | | | | | | | | | | |
| 29 | | 0.59 | | | | | | | 0.01 | | | |
| 30 | | | | | | | | | | | | |
| 31 | | | | | | | | | | | | |
| Totals | 0.00 | 3.67 | 6.38 | 0.17 | 0.24 | 4.69 | 5.71 | 0.15 | 0.01 | 0.00 | 0.00 | 0.00 |
| | | | | | | | | | | Water Year Total: | | 21.02 |

NOTE: All Values are in units of inches, unless otherwise specified.

LEGEND: A - Acculated Total
E - Estimated
T - Trace, unmeasurable amount of rain

# PRECIPITATION

## DAILY RAINFALL SUMMARY

**1158 Torrance Municipal Airport**

Gage Type: Standard Gage

Observation Time: Figures are for a 24-hour period

Latitude 33-47-59 Longitude: 118-20-08 Elevation: 102 Feet

Water Year from 10/01/2019 to 09/30/2020

| Day | Oct | Nov | Dec | Jan | Feb | Mar | Apr | May | Jun | Jul | Aug | Sep |
|---|---|---|---|---|---|---|---|---|---|---|---|---|
| 1 | | | 0.03 | | | | | | | | | |
| 2 | | | | | | | | | | | | |
| 3 | | | | | | | | | | | | |
| 4 | | | 0.92 | | | | | | | | | |
| 5 | | | 0.02 | | | | | | | | | |
| 6 | | | 0.07 | | | | 0.48E | | | | | |
| 7 | | | A | | | | 0.06E | | | | | |
| 8 | | | 0.20A | | | | 0.52 | | | | | |
| 9 | | | 0.10 | | 0.18 | | 0.88 | | | | | |
| 10 | | | | | 0.01 | 0.16 | 0.86 | | | | | |
| 11 | | | | | | | | | | | | |
| 12 | | | | | | 0.84 | | | | | | |
| 13 | | | | | | 0.42 | | | | | | |
| 14 | | | | | | 0.02 | | | | | | |
| 15 | | | | | | 0.01 | | | | | | |
| 16 | | | | | | | | | | | | |
| 17 | | | | 0.12 | | 0.55 | | | | | | |
| 18 | | | | | | | | 0.03 | | | | |
| 19 | | | | | | | | | | | | |
| 20 | | 0.29 | | | | 0.12 | | | | | | |
| 21 | | 0.02 | | | | | | | | | | |
| 22 | | | | | 0.06 | 0.02 | | | | | | |
| 23 | | | 3.09 | | | 1.00 | | | | | | |
| 24 | | | | | | | | | | | | |
| 25 | | | | | | 0.01 | | | | | | |
| 26 | | | 1.79 | | | | | | | | | |
| 27 | | 0.52 | | | | | | | | | | |
| 28 | | 1.02 | | | | | | | 0.01 | | | |
| 29 | | 0.18 | | | | | | | | | | |
| 30 | | 0.04 | | | | | | | | | | |
| 31 | | | | | | | | | | | | |
| Totals | 0.00 | 2.07 | 6.22 | 0.12 | 0.25 | 3.15 | 2.80 | 0.03 | 0.01 | 0.00 | 0.00 | 0.00 |
| | | | | | | | | | | Water Year Total: | | 14.65 |

NOTE: All Values are in units of inches, unless otherwise specified.

LEGEND: A - Acculated Total
E - Estimated
T - Trace, unmeasurable amount of rain

# PRECIPITATION

## DAILY RAINFALL SUMMARY

**1212 Lancaster FSS/FAA**

Gage Type: Standard Gage

Observation Time: Figures are for a 24-hour period

Latitude 34-44-00 Longitude: 118-13-00 Elevation: 2340 Feet

Water Year from 10/01/2019 to 09/30/2020

| Day | Oct | Nov | Dec | Jan | Feb | Mar | Apr | May | Jun | Jul | Aug | Sep |
|---|---|---|---|---|---|---|---|---|---|---|---|---|
| 1 | | | | | | 0.01 | | | | | | |
| 2 | | | | | T | | | | | | | |
| 3 | | | 0.01 | | | | | | | | | |
| 4 | | | 1.00 | | | | | | | | | |
| 5 | | | | | | | 0.01 | | | | | |
| 6 | | | 0.03 | | | | 0.40 | | | | | |
| 7 | | | T | | | | 0.45 | | | | | |
| 8 | | | 0.33 | | | | 0.24 | | | | | |
| 9 | | | | | | 1.14 | 0.73 | | | | | |
| 10 | | | | | | 0.94 | 0.40 | | | | | |
| 11 | | | | | | | | | | | | |
| 12 | | | | | | 0.40 | | | | | | |
| 13 | | | | | | 0.03 | | | | | T | |
| 14 | | | | | | | | | | | | |
| 15 | | | | | | T | | | | | T | |
| 16 | | | | 0.04 | | 0.10 | | | | | | |
| 17 | | | | T | | T | | | | | | |
| 18 | | | | | | | | 0.02 | T | | | |
| 19 | | | | | | | | | | | | |
| 20 | | 0.14 | | T | | | T | | | | | |
| 21 | | | | 0.04 | | T | | | | | | |
| 22 | | | 0.14 | | T | T | | | | | | |
| 23 | | | 0.31 | | | 0.52 | | | | | | |
| 24 | | | | | | | | | | | | |
| 25 | | | 0.10 | | | 0.01 | | | | | | |
| 26 | | | 1.89 | | | | | | | | | |
| 27 | | 0.43 | | | | 0.02 | | | | | | |
| 28 | | 0.57 | | | | | | | | | | |
| 29 | | 0.50E | | | | | | | | | | |
| 30 | | 0.21 | T | | | | | | | | | |
| 31 | | | | | | | | | | | | |
| Totals | 0.00 | 1.85 | 3.81 | 0.08 | 0.00 | 3.17 | 2.23 | 0.02 | 0.00 | 0.00 | 0.00 | 0.00 |

Water Year Total: 11.16

NOTE: All Values are in units of inches, unless otherwise specified.

LEGEND: A - Acculated Total
E - Estimated
T - Trace, unmeasurable amount of rain

# PRECIPITATION

## DAILY RAINFALL SUMMARY

**1217 Los Angeles Country Club**

Gage Type: Standard Gage

Observation Time: Figures are for a 24-hour period

Latitude 34-04-10 Longitude: 118-25-17 Elevation: 380 Feet

Water Year from 10/01/2019 to 09/30/2020

| Day | Oct | Nov | Dec | Jan | Feb | Mar | Apr | May | Jun | Jul | Aug | Sep |
|---|---|---|---|---|---|---|---|---|---|---|---|---|
| 1 | | | 0.02 | | | | | | | | | |
| 2 | | | | | | 0.02 | | | | | | |
| 3 | | | | | | | | | | | | |
| 4 | | | A | | | | | | | | | |
| 5 | | | 1.14A | | | | | | | | | |
| 6 | | | | | | | 1.30 | | | | | |
| 7 | | | 0.15E | | | | 0.45 | | | | | |
| 8 | | | 0.03 | | | | A | | | | | |
| 9 | | | 0.13 | | 0.30 | 0.11 | 0.97A | | | | | |
| 10 | | | | | | 0.12 | 0.15 | | | | | |
| 11 | | | | | | | | | | | | |
| 12 | | | | | | 1.90 | | | | | | |
| 13 | | | | | | 0.42 | | | | | | |
| 14 | | | | | | 0.25 | | | | | | |
| 15 | | | | | | | | | | | | |
| 16 | | | | 0.45 | | 0.59 | | | | | | |
| 17 | | | | | | | | | | | | |
| 18 | | | | | | | | | | | | |
| 19 | | | | | | | | 0.12E | | | | |
| 20 | | 0.08 | | | | | | | | | | |
| 21 | | 0.04 | | | | | | | | | | |
| 22 | | | | | | 1.47 | | | | | | |
| 23 | | | 1.96 | | | | | | | | | |
| 24 | | | 0.12 | | | | | | | | | |
| 25 | | | | | | | | | | | | |
| 26 | | | 1.56 | | | | | | | | | |
| 27 | | 1.25 | | | | | | | | | | |
| 28 | | 0.31 | | | | | | | | | | |
| 29 | | 0.02 | | | | | | | | | | |
| 30 | | 0.02 | | | | | | | | | | |
| 31 | | | | | | | | | | | | |
| Totals | 0.00 | 1.72 | 5.11 | 0.45 | 0.30 | 4.88 | 2.87 | 0.12 | 0.00 | 0.00 | 0.00 | 0.00 |
| | | | | | | | | | | Water Year Total: | | 15.45 |

NOTE: All Values are in units of inches, unless otherwise specified.

LEGEND: A - Acculated Total
E - Estimated
T - Trace, unmeasurable amount of rain

# PRECIPITATION

## DAILY RAINFALL SUMMARY

**1222 Northridge-Garland**

Gage Type: Standard Private

Observation Time: Figures are for a 24-hour period

Latitude 34-14-17 Longitude: 118-30-59 Elevation: 911 Feet

Water Year from 10/01/2019 to 09/30/2020

| Day | Oct | Nov | Dec | Jan | Feb | Mar | Apr | May | Jun | Jul | Aug | Sep |
|---|---|---|---|---|---|---|---|---|---|---|---|---|
| 1 | | | 0.06 | | | | | | | | | |
| 2 | | T | | | | | | | | | | |
| 3 | | | | | | | | | | | | |
| 4 | | | 1.17 | | | | | | | | | |
| 5 | | | | | | | | | | | | |
| 6 | | | 0.05 | | | | 1.73 | | | | | |
| 7 | | | 0.20 | | | | 0.08 | | | | | |
| 8 | | | 0.23 | | | | 0.78 | | | | | |
| 9 | | | | | 0.04 | | 0.77 | | | | | |
| 10 | | | | | | 0.30 | 0.60 | | | | | |
| 11 | | | | | | 0.08 | | | | | | |
| 12 | | | | | | 1.03 | | | | | | |
| 13 | | | | | | 1.78 | | | | | | |
| 14 | | | | | | 0.18 | | | | | | |
| 15 | | | | | | 0.24 | | | | | | |
| 16 | | | | | | 0.42 | | | | | | |
| 17 | | | | 0.30 | | 0.50 | | | | | | |
| 18 | | | | | | | | 0.34 | | | | |
| 19 | | | | | | 0.05 | | | | | | |
| 20 | | | | | | 0.04 | | | | | | |
| 21 | | | | | | | | | | | | |
| 22 | | | 1.30 | | | 0.10 | | | | | | |
| 23 | | | | | 0.05 | 1.28 | | | | | | |
| 24 | | | | | | | | | | | | |
| 25 | | | | | | T | | | | | | |
| 26 | | | 2.22 | | | | | | | | | |
| 27 | | 0.60 | | | | | | | | | | |
| 28 | | 1.00 | | | | | | | | | | |
| 29 | | 0.74 | | | | | | | | | | |
| 30 | | 0.05 | | | | | | | | | | |
| 31 | | | | | | | | | | | | |
| Totals | 0.00 | 2.39 | 5.23 | 0.30 | 0.09 | 6.00 | 3.96 | 0.34 | 0.00 | 0.00 | 0.00 | 0.00 |

Water Year Total: 18.31

NOTE: All Values are in units of inches, unless otherwise specified.

LEGEND: A - Acculated Total
E - Estimated
T - Trace, unmeasurable amount of rain

# PRECIPITATION

## DAILY RAINFALL SUMMARY

**1240 Pearblossom-Calif.D.W.R. Booster Sta.**

Gage Type: Standard Gage

Observation Time: Figures are for a 24-hour period

Latitude 34-30-32 Longitude: 117-55-15 Elevation: 3050 Feet

Water Year from 10/01/2019 to 09/30/2020

| Day | Oct | Nov | Dec | Jan | Feb | Mar | Apr | May | Jun | Jul | Aug | Sep |
|---|---|---|---|---|---|---|---|---|---|---|---|---|
| 1 | | | 1.38A | | | | | | | | | |
| 2 | | | | | | 0.02 | | | | | | |
| 3 | | | | | | | | | | | | |
| 4 | | | 0.35 | | | | | | | | | |
| 5 | | | 0.43 | | | | | | | | | |
| 6 | | | | | | | 0.55 | | | | | |
| 7 | | | A | | | | 0.07 | | | | | |
| 8 | | | A | | | | 0.93 | | | | | |
| 9 | | | 0.28A | | | | 0.21 | | | | | |
| 10 | | | | | | 0.18 | 0.44 | | | | | |
| 11 | | | | | | 0.16 | 0.62 | | | | | |
| 12 | | | | | | | | | | | | |
| 13 | | | | | | 2.09 | | | | | | |
| 14 | | | | | | 0.01 | | | | | | |
| 15 | | | | | | | | | | | | |
| 16 | | | | | | | | | | | | |
| 17 | | | | | | 0.04 | | | | | | |
| 18 | | | | | | | | | | | | |
| 19 | | | | | | | | | | | | |
| 20 | | | | | | | | | | | | |
| 21 | | 0.26 | | | | | | | | | | |
| 22 | | T | | | | | | | | | | |
| 23 | | | 0.40 | | | 0.26 | | | | | | |
| 24 | | | A | | | 0.01 | | | | | | |
| 25 | | | A | | | | | | | | | |
| 26 | | | A | | | | | | | | | |
| 27 | | | 1.65A | | | | | | | | | |
| 28 | | A | 0.21 | | | | | | | | | |
| 29 | | A | | | | | | | | | | |
| 30 | | A | 0.01 | | | | | | | | | |
| 31 | | | | | | | | | | | | |
| Totals | 0.00 | 0.26 | 4.71 | 0.00 | 0.00 | 2.77 | 2.82 | 0.00 | 0.00 | 0.00 | 0.00 | 0.00 |

Water Year Total: 10.56

NOTE: All Values are in units of inches, unless otherwise specified.

LEGEND: A - Acculated Total
E - Estimated
T - Trace, unmeasurable amount of rain

# PRECIPITATION

## DAILY RAINFALL SUMMARY

**1252 Palos Verdes Landfill**

Gage Type: Standard Gage

Observation Time: Figures are for a 24-hour period

Latitude 33-45-40 Longitude: 118-20-03 Elevation: 400 Feet

Water Year from 10/01/2019 to 09/30/2020

| Day | Oct | Nov | Dec | Jan | Feb | Mar | Apr | May | Jun | Jul | Aug | Sep |
|---|---|---|---|---|---|---|---|---|---|---|---|---|
| 1 | | | | | | | | | | | | |
| 2 | | | | | | | | | | | | |
| 3 | | | 0.75 | | | | | | | | | |
| 4 | | | 0.50 | | | | | | | | | |
| 5 | | | | | | | 0.45 | | | | | |
| 6 | | | A | | | | 0.25 | | | | | |
| 7 | | | A | | | | 0.65 | | | | | |
| 8 | | | 0.45A | | | | 0.55 | | | | | |
| 9 | | | | | 0.30 | 0.20 | 1.70 | | | | | |
| 10 | | | | | | 0.10 | | | | | | |
| 11 | | | | | | | | | | | | |
| 12 | | | | | | 1.35 | | | | | | |
| 13 | | | | | | A | | | | | | |
| 14 | | | | | | A | | | | | | |
| 15 | | | | | | 0.15A | | | | | | |
| 16 | | | | 0.20 | | 0.55 | | | | | | |
| 17 | | | | | | | | | | | | |
| 18 | | | | | | | | | | | | |
| 19 | | | | | | 0.15 | | | | | | |
| 20 | | 0.45 | | | | | | | | | | |
| 21 | | | | | | | | | | | | |
| 22 | | | 3.15 | | | 1.00 | | | | | | |
| 23 | | | | | | 0.05 | | | | | | |
| 24 | | | | | | | | | | | | |
| 25 | | | 2.00 | | | | | | | | | |
| 26 | | A | | | | | | | | | | |
| 27 | | A | | | | | | | | | | |
| 28 | | 1.95A | | | | | | | | | | |
| 29 | | | | | | | | | | | | |
| 30 | | | | | | | | | | | | |
| 31 | | | | | | | | | | | | |
| Totals | 0.00 | 2.40 | 6.85 | 0.20 | 0.30 | 3.55 | 3.60 | 0.00 | 0.00 | 0.00 | 0.00 | 0.00 |
| | | | | | | | | | | Water Year Total: | | 16.90 |

NOTE: All Values are in units of inches, unless otherwise specified.

LEGEND: A - Acculated Total
E - Estimated
T - Trace, unmeasurable amount of rain

# PRECIPITATION

## DAILY RAINFALL SUMMARY

**1253 Carson-County Sanitation**

Gage Type: Standard Gage Observation Time: Figures are for a 24-hour period

Latitude 33-48-07 Longitude: 118-16-58 Elevation: 40 Feet

Water Year from 10/01/2019 to 09/30/2020

| Day | Oct | Nov | Dec | Jan | Feb | Mar | Apr | May | Jun | Jul | Aug | Sep |
|---|---|---|---|---|---|---|---|---|---|---|---|---|
| 1 | | | | | | 0.03 | | | | | | |
| 2 | | | | | | | | | | | | |
| 3 | | | 0.01 | | | | | | | | | |
| 4 | | | 1.15 | | | | | | | | | |
| 5 | | | | | | | | | | | | |
| 6 | | | 0.07 | | | | 0.29 | | | | | |
| 7 | | | 0.01 | | | | 0.34 | | | | | |
| 8 | | | 0.06 | | | | 0.15 | | | | | |
| 9 | | | | | 0.34 | A | 1.22 | | | | | |
| 10 | | | | | | 0.10A | | | | | | |
| 11 | | | | | | | | | | | | |
| 12 | | | | | | 1.08 | | | | | | |
| 13 | | | | | | 0.45 | | | | | | |
| 14 | | | | | | | | | | | | |
| 15 | | | | | | | | | | | | |
| 16 | | | | 0.02 | | 0.23 | | | | | | |
| 17 | | | | | | 0.04 | | | | | | |
| 18 | | | | | | | | | | | | |
| 19 | | | | | | 0.01 | | | | | | |
| 20 | | 0.29 | | | | | | | | | | |
| 21 | | | | | | | | | | | | |
| 22 | | | 2.09E | | 0.05 | 0.78 | | | | | | |
| 23 | | | 0.06E | | | 0.01 | | | | | | |
| 24 | | | | | | 0.01 | | | | | | |
| 25 | | | 0.70 | | | | | | | | | |
| 26 | | A | 1.03 | | | | | | | | | |
| 27 | | A | | | | | | | | | | |
| 28 | | 1.29A | | | | | | | | | | |
| 29 | | 0.05 | | | | | | | | | | |
| 30 | | | | | | | | | | | | |
| 31 | | | | | | | | | | | | |
| Totals | 0.00 | 1.63 | 5.18 | 0.02 | 0.39 | 2.74 | 2.00 | 0.00 | 0.00 | 0.00 | 0.00 | 0.00 |
| | | | | | | | | | | | Water Year Total: | 11.96 |

NOTE: All Values are in units of inches, unless otherwise specified.

LEGEND: A - Acculated Total
E - Estimated
T - Trace, unmeasurable amount of rain

# PRECIPITATION

## DAILY RAINFALL SUMMARY

**1254 Long Beach Reclamation Plant**

Gage Type: Standard Gage Observation Time: Figures are for a 24-hour period

Latitude 33-48-11 Longitude: 118-05-20 Elevation: 20 Feet

Water Year from 10/01/2019 to 09/30/2020

| Day | Oct | Nov | Dec | Jan | Feb | Mar | Apr | May | Jun | Jul | Aug | Sep |
|---|---|---|---|---|---|---|---|---|---|---|---|---|
| 1 | | | | | | | | | | | | |
| 2 | | | | | | | | | | | | |
| 3 | | | 0.31 | | | | | | | | | |
| 4 | | | 0.39 | | | | | | | | | |
| 5 | | | 0.16 | | | | 0.26 | | | | | |
| 6 | | | A | | | | 0.41 | | | | | |
| 7 | | | 0.06A | | | | 0.87 | | | | | |
| 8 | | | 0.10 | | | | 0.16 | | | | | |
| 9 | | | | | 0.37 | 0.14 | 1.25 | | | | | |
| 10 | | | | | | 0.03 | | | | | | |
| 11 | | | | | | | | | | | | |
| 12 | | | | | | 1.47 | | | | | | |
| 13 | | | | | | 0.06 | | | | | | |
| 14 | | | | | | 0.13 | | | | | | |
| 15 | | | | | | | | | | | | |
| 16 | | | | 0.18 | | 0.48 | | | | | | |
| 17 | | | | | | 0.01 | | | | | | |
| 18 | | | | | | | | | | | | |
| 19 | | | | | | 0.12 | | | | | | |
| 20 | | 0.11 | | 0.01 | | | | | | | | |
| 21 | | | | | | | | | | | | |
| 22 | | | 1.15 | | 0.02 | 0.74 | | | | | | |
| 23 | | | 0.22 | | | | | | | | | |
| 24 | | | | | | 0.02 | | | | | | |
| 25 | | | 2.10 | | | | | | | | | |
| 26 | | | 0.02 | | | | | | | | | |
| 27 | | 0.31 | | | | | | | | | | |
| 28 | | 1.15 | | | | | | | | | | |
| 29 | | 0.07 | | | | | | | | | | |
| 30 | | | | | | | | | | | | |
| 31 | | | | | | | | | | | | |
| Totals | 0.00 | 1.64 | 4.51 | 0.19 | 0.39 | 3.20 | 2.95 | 0.00 | 0.00 | 0.00 | 0.00 | 0.00 |
| | | | | | | | | | | | Water Year Total: | 12.88 |

NOTE: All Values are in units of inches, unless otherwise specified.

LEGEND: A - Acculated Total
E - Estimated
T - Trace, unmeasurable amount of rain

# PRECIPITATION

## DAILY RAINFALL SUMMARY

**1255 Los Coyotes Reclamation Plant**

Gage Type: Standard Gage

Observation Time: Figures are for a 24-hour period

Latitude 33-53-05 Longitude: 118-06-24 Elevation: 70 Feet

Water Year from 10/01/2019 to 09/30/2020

| Day | Oct | Nov | Dec | Jan | Feb | Mar | Apr | May | Jun | Jul | Aug | Sep |
|---|---|---|---|---|---|---|---|---|---|---|---|---|
| 1 | | | | | | | | | | | | |
| 2 | | | | | | | | | | | | |
| 3 | | | 0.43 | | | | | | | | | |
| 4 | | | 0.53 | | | | | | | | | |
| 5 | | | | | | | 0.38 | | | | | |
| 6 | | | 0.09 | | | | 0.53 | | | | | |
| 7 | | | 0.03 | | | | 0.93 | | | | | |
| 8 | | | 0.07 | | | | 0.27 | | | | | |
| 9 | | | | | 0.02 | 0.13 | 1.35 | | | | | |
| 10 | | | | | | 0.08 | | | | | | |
| 11 | | | | | | | | | | | | |
| 12 | | | | | | 1.68 | | | | | | |
| 13 | | | | | | 0.05 | | | | | | |
| 14 | | | | | | 0.05 | | | | | | |
| 15 | | | | | | | | | | | | |
| 16 | | | | 0.17 | | 0.35 | | | | | | |
| 17 | | | | | | | | | | | | |
| 18 | | | | | | | | | | | | |
| 19 | | | | | | 0.15 | | | | | | |
| 20 | | 0.41 | | 0.11 | | | | | | | | |
| 21 | | | | | | | | | | | | |
| 22 | | | 1.22 | | 0.01 | 0.80 | | | | | | |
| 23 | | | 0.17 | | | | | | | | | |
| 24 | | | | | | | | | | | | |
| 25 | | | 2.70 | | | | | | | | | |
| 26 | | A | | | | | | | | | | |
| 27 | | 1.00A | | | | | | | | | | |
| 28 | | 1.63 | | | | | | | | | | |
| 29 | | 0.12 | | | | | | | | | | |
| 30 | | | | | | | | | | | | |
| 31 | | | | | | | | | | | | |
| Totals | 0.00 | 3.16 | 5.24 | 0.28 | 0.03 | 3.29 | 3.46 | 0.00 | 0.00 | 0.00 | 0.00 | 0.00 |
| | | | | | | | | | | | Water Year Total: | 15.46 |

NOTE: All Values are in units of inches, unless otherwise specified.

LEGEND: A - Acculated Total
E - Estimated
T - Trace, unmeasurable amount of rain

# PRECIPITATION

## DAILY RAINFALL SUMMARY

**1256 South Gate Transfer Station**

Gage Type: Standard Gage

Observation Time: Figures are for a 24-hour period

Latitude 33-56-40 Longitude: 118-09-56 Elevation: 100 Feet

Water Year from 10/01/2019 to 09/30/2020

| Day | Oct | Nov | Dec | Jan | Feb | Mar | Apr | May | Jun | Jul | Aug | Sep |
|---|---|---|---|---|---|---|---|---|---|---|---|---|
| 1 | | | | | | | | | | | | |
| 2 | | | | | | | | | | | | |
| 3 | | | A | | | | | | | | | |
| 4 | | | 0.95A | | | | | | | | | |
| 5 | | | | | | | 0.31 | | | | | |
| 6 | | | 0.14 | | | | 0.50 | | | | | |
| 7 | | | A | | | | 0.83 | | | | | |
| 8 | | | 0.09A | | | | 0.22 | | | | | |
| 9 | | | | | | A | 1.11 | | | | | |
| 10 | | | | | | 0.21A | | | | | | |
| 11 | | | | | | | | | | | | |
| 12 | | | | | | 1.30 | | | | | | |
| 13 | | | | | | 0.12 | | | | | | |
| 14 | | | | | | A | | | | | | |
| 15 | | | | | | 0.14A | | | | | | |
| 16 | | | | 0.22 | | 0.35 | | | | | | |
| 17 | | | | | | | | | | | | |
| 18 | | | | | | | | 0.02 | | | | |
| 19 | | | | | | 0.11 | | | | | | |
| 20 | | 0.10 | | | | | | | | | | |
| 21 | | | | | | | | | | | | |
| 22 | | | 0.78 | | 0.02E | 0.91 | | | | | | |
| 23 | | | 0.20 | | 0.06E | | | | | | | |
| 24 | | | | | | | | | | | | |
| 25 | | | 2.00 | | | | | | | | | |
| 26 | | A | | | | | | | | | | |
| 27 | | A | | | | | | | | | | |
| 28 | | 1.70A | | | | | | | | | | |
| 29 | | | | | | | | | | | | |
| 30 | | | | | | | | | | | | |
| 31 | | | | | | | | | | | | |
| Totals | 0.00 | 1.80 | 4.16 | 0.22 | 0.08 | 3.14 | 2.97 | 0.02 | 0.00 | 0.00 | 0.00 | 0.00 |
| | | | | | | | | | | Water Year Total: | | 12.39 |

NOTE: All Values are in units of inches, unless otherwise specified.

LEGEND: A - Acculated Total
E - Estimated
T - Trace, unmeasurable amount of rain

# PRECIPITATION

## DAILY RAINFALL SUMMARY

**1257 San Jose Creek Reclamation Plant**

Gage Type: Standard Gage

Observation Time: Figures are for a 24-hour period

Latitude 34-01-55 Longitude: 118-01-16 Elevation: 275 Feet

Water Year from 10/01/2019 to 09/30/2020

| Day | Oct | Nov | Dec | Jan | Feb | Mar | Apr | May | Jun | Jul | Aug | Sep |
|---|---|---|---|---|---|---|---|---|---|---|---|---|
| 1 | | | | | | | | | | | | |
| 2 | | | | | | | | | | | | |
| 3 | | | 0.39 | | | | | | | | | |
| 4 | | | 0.92 | | | | | | | | | |
| 5 | | | | | | | 0.55 | | | | | |
| 6 | | | 0.03 | | | | 0.83 | | | | | |
| 7 | | | 0.05 | | | | 0.48 | | | | | |
| 8 | | | 0.02 | | | | 0.32 | | | | | |
| 9 | | | | | | A | 1.02 | | | | | |
| 10 | | | | | | 0.23A | | | | | | |
| 11 | | | | | | | | | | | | |
| 12 | | | | | | 1.76 | | | | | | |
| 13 | | | | | | 0.23 | | | | | | |
| 14 | | | | | | 0.24 | | | | | | |
| 15 | | | | | | | | | | | | |
| 16 | | | | 0.32 | | 0.67 | | | | | | |
| 17 | | | | | | 0.05 | | | | | | |
| 18 | | | | | | | | 0.26E | | | | |
| 19 | | | | | | 0.41 | | | | | | |
| 20 | | 1.10 | | 0.02 | | | | | | | | |
| 21 | | | | | | | | | | | | |
| 22 | | | 0.94 | | 0.03 | 0.73 | | | | | | |
| 23 | | | 0.20 | | | | | | | | | |
| 24 | | | | | | | | | | | | |
| 25 | | | 2.04 | | | | | | | | | |
| 26 | | | | | | | | | | | | |
| 27 | | 1.02 | | | | | | | | | | |
| 28 | | 1.14 | | | | | | | | | | |
| 29 | | 0.03 | | | | | | | | | | |
| 30 | | | | | | | | | | | | |
| 31 | | | | | | | | | | | | |
| Totals | 0.00 | 3.29 | 4.59 | 0.34 | 0.03 | 4.32 | 3.20 | 0.26 | 0.00 | 0.00 | 0.00 | 0.00 |

Water Year Total: 16.03

NOTE: All Values are in units of inches, unless otherwise specified.

LEGEND: A - Acculated Total
E - Estimated
T - Trace, unmeasurable amount of rain

# PRECIPITATION

## DAILY RAINFALL SUMMARY

**1258 Puente Hills Landfill**

Gage Type: Standard Gage

Observation Time: Figures are for a 24-hour period

Latitude 34-01-35 Longitude: 118-01-49 Elevation: 300 Feet

Water Year from 10/01/2019 to 09/30/2020

| Day | Oct | Nov | Dec | Jan | Feb | Mar | Apr | May | Jun | Jul | Aug | Sep |
|---|---|---|---|---|---|---|---|---|---|---|---|---|
| 1 | | | | | | | | | | | | |
| 2 | | | | | | | | | | | | |
| 3 | | | 0.19 | | | | | | | | | |
| 4 | | | 1.22 | | | | | | | | | |
| 5 | | | | | | | 0.57 | | | | | |
| 6 | | | A | | | | 0.90 | | | | | |
| 7 | | | A | | | | 0.55 | | | | | |
| 8 | | | 0.33A | | | | 0.57 | | | | | |
| 9 | | | | | | 0.10 | 1.27 | | | | | |
| 10 | | | | | | 0.37 | | | | | | |
| 11 | | | | | | | | | | | | |
| 12 | | | | | | 1.62 | 0.13 | | | | | |
| 13 | | | | | | A | | | | | | |
| 14 | | | | | | A | | | | | | |
| 15 | | | 0.03 | | | 0.72A | | | | | | |
| 16 | | | | 0.33 | | 0.79 | | | | | | |
| 17 | | | | | | 0.07 | | | | | | |
| 18 | | | | | | | | 0.26 | | | | |
| 19 | | 0.03 | | | | 0.49 | | | | | | |
| 20 | | 1.01 | | 0.03 | | | | | | | | |
| 21 | | | | | | | | | | | | |
| 22 | | | 0.83 | | | 0.70 | | | | | | |
| 23 | | | 0.45 | | 0.05 | 0.10 | | | | | | |
| 24 | | | | | | | | | | | | |
| 25 | | | 2.38 | | | | | | | | | |
| 26 | | 0.25E | | | | | | | | | | |
| 27 | | 1.53E | | | | | | | | | | |
| 28 | | 0.63E | | | | | | | | | | |
| 29 | | | | | | | | | | | | |
| 30 | | | | | | | | | | | | |
| 31 | | | | | | | | | | | | |
| Totals | 0.00 | 3.45 | 5.43 | 0.36 | 0.05 | 4.96 | 3.99 | 0.26 | 0.00 | 0.00 | 0.00 | 0.00 |

Water Year Total: 18.50

NOTE: All Values are in units of inches, unless otherwise specified.

LEGEND: A - Acculated Total
E - Estimated
T - Trace, unmeasurable amount of rain

# PRECIPITATION

## DAILY RAINFALL SUMMARY

**1259 Whittier Narrows Reclamation Plant**

Gage Type: Standard Gage

Observation Time: Figures are for a 24-hour period

Latitude 34-03-59 Longitude: 118-03-54 Elevation: 225 Feet

Water Year from 10/01/2019 to 09/30/2020

| Day | Oct | Nov | Dec | Jan | Feb | Mar | Apr | May | Jun | Jul | Aug | Sep |
|---|---|---|---|---|---|---|---|---|---|---|---|---|
| 1 | | | | | | | | | | | | |
| 2 | | | | | | | | | | | | |
| 3 | | | 0.45 | | | | | | | | | |
| 4 | | | 0.83 | | | | | | | | | |
| 5 | | | | | | | 0.38 | | | | | |
| 6 | | | 0.12 | | | | 0.34 | | | | | |
| 7 | | | 0.08 | | | | 0.41 | | | | | |
| 8 | | | 0.08 | | | | 0.46 | | | | | |
| 9 | | | | | | 0.15 | 0.86 | | | | | |
| 10 | | | | | | 0.17 | | | | | | |
| 11 | | | | | | 0.01 | | | | | | |
| 12 | | | | | | 1.45 | | | | | | |
| 13 | | | | | | 0.18 | | | | | | |
| 14 | | | | | | 0.12 | | | | | | |
| 15 | | | | | | | | | | | | |
| 16 | | | | 0.31 | | 0.43 | | | | | | |
| 17 | | | | | | 0.03 | | | | | | |
| 18 | | | | | | | | 0.26E | | | | |
| 19 | | | | | | 0.27 | | | | | | |
| 20 | | 0.53 | | 0.05 | | | | | | | | |
| 21 | | | | | | | | | | | | |
| 22 | | | 1.08 | | 0.09 | 0.62 | | | | | | |
| 23 | | | 0.21 | | | | | | | | | |
| 24 | | | | | | | | | | | | |
| 25 | | | 2.02 | | | | | | | | | |
| 26 | | | 0.01 | | | | | | | | | |
| 27 | | 1.60 | | | | | | | | | | |
| 28 | | 0.85 | | | | | | | | | | |
| 29 | | | | | | | | | | | | |
| 30 | | | | | | | | | | | | |
| 31 | | | | | | | | | | | | |
| Totals | 0.00 | 2.98 | 4.88 | 0.36 | 0.09 | 3.43 | 2.45 | 0.26 | 0.00 | 0.00 | 0.00 | 0.00 |
| | | | | | | | | | | Water Year Total: | | 14.45 |

NOTE: All Values are in units of inches, unless otherwise specified.

LEGEND: A - Acculated Total
E - Estimated
T - Trace, unmeasurable amount of rain

# PRECIPITATION

## DAILY RAINFALL SUMMARY

**1260 Spadra Landfill**

Gage Type: Standard Gage

Observation Time: Figures are for a 24-hour period

Latitude 34-02-36 Longitude: 117-49-50 Elevation: 700 Feet

Water Year from 10/01/2019 to 09/30/2020

| Day | Oct | Nov | Dec | Jan | Feb | Mar | Apr | May | Jun | Jul | Aug | Sep |
|---|---|---|---|---|---|---|---|---|---|---|---|---|
| 1 | | | | | | 0.05 | | | | | | |
| 2 | | | | | | | | | | | | |
| 3 | | | 0.14 | | | | | | | | | |
| 4 | | | 1.09 | | | | | | | | | |
| 5 | | | | | | | 0.35 | | | | | |
| 6 | | | A | | | | 0.94 | | | | | |
| 7 | | | A | | | | 0.57 | | | | | |
| 8 | | | 0.38A | | | | 0.12 | | | | | |
| 9 | | | | | | 0.23 | 0.79 | | | | | |
| 10 | | | | | | 0.39 | | | | | | |
| 11 | | | | | | | | | | | | |
| 12 | | | | | | 1.76 | 0.10 | | | | | |
| 13 | | | | | | A | | | | | | |
| 14 | | | | | | A | | | | | | |
| 15 | | | | | | 0.48A | | | | | | |
| 16 | | | | 0.24 | | 0.47 | | | | | | |
| 17 | | | | | | | | | | | | |
| 18 | | | | | | | | 0.28 | | | | |
| 19 | | | | | | 0.70 | | | | | | |
| 20 | | 0.25 | | 0.01 | | | | | | | | |
| 21 | | | | | | | | | | | | |
| 22 | | | 0.63 | | | 0.68 | | | | | | |
| 23 | | | 0.37 | | 0.08 | 0.05 | | | | | | |
| 24 | | | | | | | | | | | | |
| 25 | | | 2.37 | | | | | | | | | |
| 26 | | 0.10E | 0.05 | | | | | | | | | |
| 27 | | 1.19E | | | | | | | | | | |
| 28 | | 1.07E | | | | | | | | | | |
| 29 | | 0.11E | | | | | | | | | | |
| 30 | | | | | | | | | | | | |
| 31 | | | | | | | | | | | | |
| Totals | 0.00 | 2.72 | 5.03 | 0.25 | 0.08 | 4.81 | 2.87 | 0.28 | 0.00 | 0.00 | 0.00 | 0.00 |
| | | | | | | | | | | Water Year Total: | | 16.04 |

NOTE: All Values are in units of inches, unless otherwise specified.

LEGEND: A - Acculated Total
E - Estimated
T - Trace, unmeasurable amount of rain

# PRECIPITATION

## DAILY RAINFALL SUMMARY

**1261 La Canada Reclamation Plant**

Gage Type: Standard Gage

Observation Time: Figures are for a 24-hour period

Latitude 34-13-00 Longitude: 118-11-14 Elevation: 1800 Feet

Water Year from 10/01/2019 to 09/30/2020

| Day | Oct | Nov | Dec | Jan | Feb | Mar | Apr | May | Jun | Jul | Aug | Sep |
|---|---|---|---|---|---|---|---|---|---|---|---|---|
| 1 | | | | | | 0.02 | | | | | | |
| 2 | | | | | | | | | | | | |
| 3 | | | 0.44 | | | | | | | | | |
| 4 | | | 0.67 | | | | | | | | | |
| 5 | | | | | | | 1.98 | | | | | |
| 6 | | | 0.24 | | | | 0.88 | | | | | |
| 7 | | | 0.24 | | | | 1.30 | | | | | |
| 8 | | | 0.49 | | | | 0.28 | | | | | |
| 9 | | | | | 0.26 | 0.20 | 0.82 | | | | | |
| 10 | | | | | | 0.13 | | | | | | |
| 11 | | | | | | | | | | | | |
| 12 | | | | | | 1.92 | | | | | | |
| 13 | | | | | | 0.37 | | | | | | |
| 14 | | | | | | 0.37 | | | | | | |
| 15 | | | | | | 0.02 | | | | | | |
| 16 | | | | 0.30 | | 0.88 | | | | | | |
| 17 | | | | | | 0.01 | | 0.11E | | | | |
| 18 | | | | | | 0.05 | | 0.26E | | | | |
| 19 | | | | | | 0.17 | | | | | | |
| 20 | | 0.15 | | | | | | | | | | |
| 21 | | | | | | | | | | | | |
| 22 | | | 1.17 | | 0.05 | 1.11 | | | | | | |
| 23 | | | 0.14 | | | | | | | | | |
| 24 | | | | | | | | | | | | |
| 25 | | | 2.53 | | | | | | | | | |
| 26 | | | 0.07 | | | | | | | | | |
| 27 | | 1.23 | 0.02 | | | | | | | | | |
| 28 | | 0.97 | | | | | | | | | | |
| 29 | | 0.03 | | | | | | | | | | |
| 30 | | | | | | | | | | | | |
| 31 | | | | | | | | | | | | |
| Totals | 0.00 | 2.38 | 6.01 | 0.30 | 0.31 | 5.25 | 5.26 | 0.37 | 0.00 | 0.00 | 0.00 | 0.00 |
| | | | | | | | | | | Water Year Total: | | 19.88 |

NOTE: All Values are in units of inches, unless otherwise specified.

LEGEND: A - Acculated Total
E - Estimated
T - Trace, unmeasurable amount of rain

# PRECIPITATION

## DAILY RAINFALL SUMMARY

**1262 Saugus Reclamation Plant**

Gage Type: Standard Gage

Observation Time: Figures are for a 24-hour period

Latitude 34-24-48 Longitude: 118-32-23 Elevation: 1150 Feet

Water Year from 10/01/2019 to 09/30/2020

| Day | Oct | Nov | Dec | Jan | Feb | Mar | Apr | May | Jun | Jul | Aug | Sep |
|---|---|---|---|---|---|---|---|---|---|---|---|---|
| 1 | | | | | | | | | | | | |
| 2 | | | | | | | | | | | | |
| 3 | | | 0.54 | | | | | | | | | |
| 4 | | | 0.64 | | | | | | | | | |
| 5 | | | | | | | 0.90 | | | | | |
| 6 | | | 0.23 | | | | 0.23 | | | | | |
| 7 | | | 0.03 | | | | 1.05 | | | | | |
| 8 | | | 0.25 | | | | 0.12 | | | | | |
| 9 | | | | | | 0.03 | 0.78 | | | | | |
| 10 | | | | | | 0.76 | | | | | | |
| 11 | | | | | | 0.02 | | | | | | |
| 12 | | | | | | 1.91 | | | | | | |
| 13 | | | | | | 0.03 | | | | | | |
| 14 | | | | | | 0.25 | | | | | | |
| 15 | | | | | | | | | | | | |
| 16 | | | | 0.33 | | 0.77E | | | | | | |
| 17 | | | | | | 0.12 | | 0.05E | | | | |
| 18 | | | | | | | | 0.05E | | | | |
| 19 | | | | | | 0.21 | | | | | | |
| 20 | | 0.08 | | 0.03 | | | | | | | | |
| 21 | | | | | | | | | | | | |
| 22 | | | 0.85 | | 0.06 | 0.68 | | | | | | |
| 23 | | | 0.03 | | | 0.01 | | | | | | |
| 24 | | | | | | | | | | | | |
| 25 | | | 1.73 | | | | | | | | | |
| 26 | | A | 0.02 | | | 0.14 | | | | | | |
| 27 | | 0.91A | | | | | | | | | | |
| 28 | | 0.87 | | | | | | | | | | |
| 29 | | 0.03 | | | | | | | | | | |
| 30 | | | | | | | | | | | | |
| 31 | | | | | | | | | | | | |
| Totals | 0.00 | 1.89 | 4.32 | 0.36 | 0.06 | 4.93 | 3.08 | 0.10 | 0.00 | 0.00 | 0.00 | 0.00 |
| | | | | | | | | | | Water Year Total: | | 14.74 |

NOTE: All Values are in units of inches, unless otherwise specified.

LEGEND: A - Acculated Total
E - Estimated
T - Trace, unmeasurable amount of rain

# PRECIPITATION

## DAILY RAINFALL SUMMARY

**1263 Valencia Reclamation Plant**

Gage Type: Standard Gage

Observation Time: Figures are for a 24-hour period

Latitude 34-25-55 Longitude: 118-37-13 Elevation: 1000 Feet

Water Year from 10/01/2019 to 09/30/2020

| Day | Oct | Nov | Dec | Jan | Feb | Mar | Apr | May | Jun | Jul | Aug | Sep |
|---|---|---|---|---|---|---|---|---|---|---|---|---|
| 1 | | | | | | | | | | | | |
| 2 | | | | | | | | | | | | |
| 3 | | | 0.69 | | | | | | | | | |
| 4 | | | 0.91 | | | | | | | | | |
| 5 | | | | | | | 0.60 | | | | | |
| 6 | | | 0.24 | | | | 0.05 | | | | | |
| 7 | | | 0.07 | | | | 0.81 | | | | | |
| 8 | | | 0.07 | | | | 0.13 | | | | | |
| 9 | | | | | | 0.06 | 0.86 | | | | | |
| 10 | | | | | | 0.65 | | | | | | |
| 11 | | | | | | 0.01 | | | | | | |
| 12 | | | | | | 1.78 | | | | | | |
| 13 | | | | | | 0.03 | | | | | | |
| 14 | | | | | | 0.08 | | | | | | |
| 15 | | | | | | | | | | | | |
| 16 | | | | 0.25 | | 0.64 | | | | | | |
| 17 | | | | | | 0.03 | | 0.05E | | | | |
| 18 | | | | | | | | 0.05E | | | | |
| 19 | | | | | | 0.23 | | | | | | |
| 20 | | 0.24 | | 0.05 | | | | | | | | |
| 21 | | | | | A | | | | | | | |
| 22 | | | 0.97 | | 0.26A | 0.76 | | | | | | |
| 23 | | | 0.02 | | | 0.02 | | | | | | |
| 24 | | | | | | | | | | | | |
| 25 | | | 1.53 | | | | | | | | | |
| 26 | | A | 0.01 | | | 0.15 | | | | | | |
| 27 | | 0.83A | | | | | | | | | | |
| 28 | | 0.82 | | | | | | | | | | |
| 29 | | 0.08 | | | | | | | | | | |
| 30 | | | | | | | | | | | | |
| 31 | | | | | | | | | | | | |
| Totals | 0.00 | 1.97 | 4.51 | 0.30 | 0.26 | 4.44 | 2.45 | 0.10 | 0.00 | 0.00 | 0.00 | 0.00 |
| | | | | | | | | | | Water Year Total: | | 14.03 |

NOTE: All Values are in units of inches, unless otherwise specified.

LEGEND: A - Acculated Total
E - Estimated
T - Trace, unmeasurable amount of rain

# PRECIPITATION

## DAILY RAINFALL SUMMARY

**1264 Calabasas Landfill**

Gage Type: Standard Gage

Observation Time: Figures are for a 24-hour period

Latitude 34-08-25 Longitude: 118-42-35 Elevation: 800 Feet

Water Year from 10/01/2019 to 09/30/2020

| Day | Oct | Nov | Dec | Jan | Feb | Mar | Apr | May | Jun | Jul | Aug | Sep |
|---|---|---|---|---|---|---|---|---|---|---|---|---|
| 1 | | | 0.09 | | | | | | | | | |
| 2 | | | | | | | | | | | | |
| 3 | | | 0.80 | | | | | | | | | |
| 4 | | | 0.40 | | | | | | | | | |
| 5 | | | | | | | 1.31 | | | | | |
| 6 | | | A | | | | 0.02 | | | | | |
| 7 | | | A | | | | 0.57 | | | | | |
| 8 | | | 0.44A | | | | 0.29 | | | | | |
| 9 | | | | | | 0.12 | 0.85 | | | | | |
| 10 | | | | | | 0.45 | | | | | | |
| 11 | | | | | | | | | | | | |
| 12 | | | | | | 2.20 | 0.04 | | | | | |
| 13 | | | | | | A | | | | | | |
| 14 | | | | | | A | | | | | | |
| 15 | | | | | | 0.50A | | | | | | |
| 16 | | | | 0.15E | | 0.83 | | | | | | |
| 17 | | | | | | 0.09 | | | | | | |
| 18 | | | | | | | | 0.10 | | | | |
| 19 | | A | | | | 0.02 | | | | | | |
| 20 | | 0.14A | | | | | | | | | | |
| 21 | | | | | | | | | | | | |
| 22 | | | 1.85 | | | 1.11 | | | | | | |
| 23 | | | | | 0.01 | | | | | | | |
| 24 | | | | | | | | | | | | |
| 25 | | | 1.57 | | | | | | | | | |
| 26 | | 0.20 | | | | | | | | | | |
| 27 | | 0.90 | | | | | | | | | | |
| 28 | | 0.47 | | | | | | | | | | |
| 29 | | | | | | | | | | | | |
| 30 | | | | | | | | | | | | |
| 31 | | | | | | | | | | | | |
| Totals | 0.00 | 1.71 | 5.15 | 0.15 | 0.01 | 5.32 | 3.08 | 0.10 | 0.00 | 0.00 | 0.00 | 0.00 |
| | | | | | | | | | | Water Year Total: | | 15.52 |

NOTE: All Values are in units of inches, unless otherwise specified.

LEGEND: A - Acculated Total
E - Estimated
T - Trace, unmeasurable amount of rain

# PRECIPITATION

## DAILY RAINFALL SUMMARY

**1265 Scholl Canyon Landfill**

Gage Type: Standard Gage

Observation Time: Figures are for a 24-hour period

Latitude 34-08-38 Longitude: 118-11-07 Elevation: 1000 Feet

Water Year from 10/01/2019 to 09/30/2020

| Day | Oct | Nov | Dec | Jan | Feb | Mar | Apr | May | Jun | Jul | Aug | Sep |
|---|---|---|---|---|---|---|---|---|---|---|---|---|
| 1 | | | 0.03 | | | 0.03 | | | | | | |
| 2 | | | | | | | | | | | | |
| 3 | | | 0.45 | | | | | | | | | |
| 4 | | | 0.60 | | | | | | 0.01 | | | |
| 5 | | | | | | | 1.20 | | | | | |
| 6 | | | 0.14 | | | | 0.56 | | | | | |
| 7 | | | A | | | | 0.99 | | | | | |
| 8 | | | 0.18A | | | | 0.18 | | | | | |
| 9 | | | | | 0.27 | 0.23 | 0.87 | | | | | |
| 10 | | | | | | 0.16 | | | | | | |
| 11 | | | | | | | | | | | | |
| 12 | | | | | | 1.89 | 0.45 | | | | | |
| 13 | | | | | | 0.37 | | | | | | |
| 14 | | | | | | A | | | | | | |
| 15 | | | 0.01 | | | 0.25A | | | | | | |
| 16 | | | | 0.18 | | 0.58 | | | | | | |
| 17 | | | | | | | | A | | | | |
| 18 | | | | | | | | 0.48A | | | | |
| 19 | | | | | | 0.05 | | | | | | |
| 20 | | 0.27 | | 0.01 | | | | | | | | |
| 21 | | | | | | | | | | | | |
| 22 | | | 1.10 | | | 1.07 | | | | | | |
| 23 | | | 0.07 | | 0.09 | | | | | | | |
| 24 | | | | | | | | | | | | |
| 25 | | | 2.08 | | | | | | | | | |
| 26 | | 0.01 | | | | | | | | | | |
| 27 | | 1.04 | | | | | | | | | | |
| 28 | | 0.75 | | | | | | | | | | |
| 29 | | | | | | | | | | | | |
| 30 | | | | | | | | | | | | |
| 31 | | | | | | | | | | | | |
| Totals | 0.00 | 2.07 | 4.66 | 0.19 | 0.36 | 4.63 | 4.25 | 0.48 | 0.01 | 0.00 | 0.00 | 0.00 |
| | | | | | | | | | | Water Year Total: | | 16.65 |

NOTE: All Values are in units of inches, unless otherwise specified.

LEGEND: A - Acculated Total
E - Estimated
T - Trace, unmeasurable amount of rain

# PRECIPITATION

## DAILY RAINFALL SUMMARY

**1267 Lancaster Reclamation Plant**

Gage Type: Standard Gage

Observation Time: Figures are for a 24-hour period

Latitude 34-46-38 Longitude: 118-09-11 Elevation: 2302 Feet

Water Year from 10/01/2019 to 09/30/2020

| Day | Oct | Nov | Dec | Jan | Feb | Mar | Apr | May | Jun | Jul | Aug | Sep |
|---|---|---|---|---|---|---|---|---|---|---|---|---|
| 1 | | | | | | 0.01 | | | | | | |
| 2 | | | | | | | | | | | | |
| 3 | | | 0.38 | | | | | | | | | |
| 4 | | | 0.62 | | | | | | | | | |
| 5 | | | | | | | 0.46 | | | | | |
| 6 | | | A | | | | 0.36 | | | | | |
| 7 | | | A | | | | 0.52 | | | | | |
| 8 | | | 0.35A | | | | 0.21 | | | | | |
| 9 | | | | | | 0.15 | 0.75 | | | | | |
| 10 | | | | | | 0.30 | | | | | | |
| 11 | | | | | | | | | | | | |
| 12 | | | | | | 1.35 | | | | | | |
| 13 | | | | | | 0.04 | | | | | | |
| 14 | | | | | | 0.05 | | | | | | |
| 15 | | | | | | | | | | | | |
| 16 | | | | 0.03 | | 0.07 | | | | | | |
| 17 | | | | | | | | | | | | |
| 18 | | | | | | | | | | | | |
| 19 | | | | | | | | | | | | |
| 20 | | 0.18 | | 0.04 | | | | | | | | |
| 21 | | | | | | | | | | | | |
| 22 | | | 0.29 | | 0.01 | 0.35 | | | | | | |
| 23 | | | 0.10 | | | | | | | | | |
| 24 | | | | | | | | | | | | |
| 25 | | | 0.93 | | | 0.06 | | | | | | |
| 26 | | A | 0.93 | | | 0.01 | | | | | | |
| 27 | | 0.60A | | | | | | | | | | |
| 28 | | 0.57 | | | | | | | | | | |
| 29 | | | | | | | | | | | | |
| 30 | | | | | | | | | | | | |
| 31 | | | | | | | | | | | | |
| Totals | 0.00 | 1.35 | 3.60 | 0.07 | 0.01 | 2.39 | 2.30 | 0.00 | 0.00 | 0.00 | 0.00 | 0.00 |
| | | | | | | | | | | Water Year Total: | | 9.72 |

NOTE: All Values are in units of inches, unless otherwise specified.

LEGEND: A - Acculated Total
E - Estimated
T - Trace, unmeasurable amount of rain

# PRECIPITATION

## DAILY RAINFALL SUMMARY

**1268 Palmdale Reclamation Plant**

Gage Type: Standard Gage

Observation Time: Figures are for a 24-hour period

Latitude 34-35-30 Longitude: 118-05-10 Elevation: 2565 Feet

Water Year from 10/01/2019 to 09/30/2020

| Day | Oct | Nov | Dec | Jan | Feb | Mar | Apr | May | Jun | Jul | Aug | Sep |
|---|---|---|---|---|---|---|---|---|---|---|---|---|
| 1 | | | 0.01 | | | | | | | | | |
| 2 | | | | | | | | | | | | |
| 3 | | | 0.36 | | | | | | | | | |
| 4 | | | 0.84 | | | | | | | | | |
| 5 | | | | | | | 0.14 | | | | | |
| 6 | | | 0.04 | | | | 0.33 | | | | | |
| 7 | | | A | | | | 0.53 | | | | | |
| 8 | | | 0.30A | | | | 0.06 | | | | | |
| 9 | | | | | | 0.02 | 0.74 | | | | | |
| 10 | | | | | | 0.16 | | | | | | |
| 11 | | | | | | | | | | | | |
| 12 | | | | | | 1.83 | | | | | | |
| 13 | | | | | | 0.05 | | | | | | |
| 14 | | | | | | | | | | | | |
| 15 | | | | | | | | | | | | |
| 16 | | | | 0.02 | | 0.02 | | | | | | |
| 17 | | | | | | | | | | | | |
| 18 | | | | | | | | | | | | |
| 19 | | | | | | | | | | | | |
| 20 | | 0.19 | | 0.02 | | | | | | | | |
| 21 | | | | | | | | | | | | |
| 22 | | | 0.45 | | 0.02 | 0.48 | | | | | | |
| 23 | | | 0.16 | | | 0.01 | | | | | | |
| 24 | | | | | | | | | | | | |
| 25 | | | 0.78 | | | | | | | | | |
| 26 | | A | 0.42 | | | 0.01 | | | | | | |
| 27 | | 0.78A | | | | | | | | | | |
| 28 | | A | | | | | | | | | | |
| 29 | | 0.22A | | | | | | | | | | |
| 30 | | | | | | | | | | | | |
| 31 | | | | | | | | | | | | |
| Totals | 0.00 | 1.19 | 3.36 | 0.04 | 0.02 | 2.58 | 1.80 | 0.00 | 0.00 | 0.00 | 0.00 | 0.00 |
| | | | | | | | | | | Water Year Total: | | 8.99 |

NOTE: All Values are in units of inches, unless otherwise specified.

LEGEND: A - Acculated Total
E - Estimated
T - Trace, unmeasurable amount of rain

# PRECIPITATION

## DAILY RAINFALL SUMMARY

**1271 Pomona Waste Reclamation Plant**

Gage Type: Standard Gage

Observation Time: Figures are for a 24-hour period

Latitude 34-03-18 Longitude: 117-47-34 Elevation: 786 Feet

Water Year from 10/01/2019 to 09/30/2020

| Day | Oct | Nov | Dec | Jan | Feb | Mar | Apr | May | Jun | Jul | Aug | Sep |
|---|---|---|---|---|---|---|---|---|---|---|---|---|
| 1 | | | | | | 0.14 | | | | | | |
| 2 | | | | | | | | | | | | |
| 3 | | | 0.30 | | | | | | | | | |
| 4 | | | 0.96 | | | | | | | | | |
| 5 | | | | | | | 0.62 | | | | | |
| 6 | | | 0.20 | | | | 0.90 | | | | | |
| 7 | | | 0.12 | | | | 0.67 | | | | | |
| 8 | | | 0.14 | | | | 0.23 | | | | | |
| 9 | | | | | | 0.40 | 0.87 | | | | | |
| 10 | | | | | | 0.37 | | | | | | |
| 11 | | | | | | | | | | | | |
| 12 | | | | | | 1.80 | | | | | | |
| 13 | | | | | | 0.41 | | | | | | |
| 14 | | | | | | 0.05 | | | | | | |
| 15 | | | | | | 0.14 | | | | | | |
| 16 | | | | 0.24 | | 0.43 | | | | | | |
| 17 | | | | | | | | | | | | |
| 18 | | | | | | | | 0.25E | | | | |
| 19 | | | | | | 0.67 | | | | | | |
| 20 | | 0.20 | | 0.01 | | | | | | | | |
| 21 | | | | | | | | | | | | |
| 22 | | | 0.68 | | 0.03 | 0.80 | | | | | | |
| 23 | | | 0.33 | | | 0.02 | | | | | | |
| 24 | | | 0.02 | | | | | | | | | |
| 25 | | | 2.50 | | | | | | | | | |
| 26 | | A | 0.03 | | | | | | | | | |
| 27 | | 0.86A | | | | | | | | | | |
| 28 | | 1.74 | | | | | | | | | | |
| 29 | | 0.10 | | | | | | | | | | |
| 30 | | | | | | | | | | | | |
| 31 | | | | | | | | | | | | |
| Totals | 0.00 | 2.90 | 5.28 | 0.25 | 0.03 | 5.23 | 3.29 | 0.25 | 0.00 | 0.00 | 0.00 | 0.00 |
| | | | | | | | | | | Water Year Total: | | 17.23 |

NOTE: All Values are in units of inches, unless otherwise specified.

LEGEND: A - Acculated Total
E - Estimated
T - Trace, unmeasurable amount of rain

# PRECIPITATION

## DAILY RAINFALL SUMMARY

**1274 Whittier - Valna Drive**

Gage Type: Standard Private

Observation Time: Figures are for a 24-hour period

Latitude 33-57-39 Longitude: 118-01-10 Elevation: 255 Feet

Water Year from 10/01/2019 to 09/30/2020

| Day | Oct | Nov | Dec | Jan | Feb | Mar | Apr | May | Jun | Jul | Aug | Sep |
|---|---|---|---|---|---|---|---|---|---|---|---|---|
| 1 | | 0.01 | T | | | | | | | | | |
| 2 | | | | | | 0.02 | | | | | | |
| 3 | | | | | | | | | | | | |
| 4 | | | 0.44 | | | | | | | | | |
| 5 | | | 0.52 | | | | 0.15 | | | | | |
| 6 | | | | | | | 0.49 | | | | | |
| 7 | | | 0.03 | | | | 0.60 | | | | | |
| 8 | | | 0.04 | | | | 0.44 | | | | | |
| 9 | | | 0.10 | | | | 0.29 | | | | | |
| 10 | | | 0.01 | | | 0.14 | 0.90 | | | | | |
| 11 | | | | | | 0.19 | 0.06 | | | | | |
| 12 | | | | | | | | | | | | |
| 13 | | | | | | 1.79 | | | | | | |
| 14 | | | 0.02 | | | 0.06 | | | | | | |
| 15 | | | T | | | 0.23 | | | | | | |
| 16 | | | | | | T | | | | | | |
| 17 | | | | 0.27 | | 0.63 | | | | | | |
| 18 | | | | | | 0.02 | | 0.25 | | | | |
| 19 | | | | | | | | | | | | |
| 20 | | | | | | 0.71 | | | | | | |
| 21 | | 0.64 | | 0.02 | | 0.01 | | | | | | |
| 22 | | | | | | T | | | | | | |
| 23 | | | 1.13 | | 0.24 | 0.53 | | | | | | |
| 24 | | | 0.13 | | | | | | | | | |
| 25 | | | | | | | | | | | | |
| 26 | | | 1.96 | | | | | | | | | |
| 27 | | | | | | 0.01 | | | | | | |
| 28 | | 1.81 | | | | | | | | | | |
| 29 | | 0.14 | | | | | | | | | | |
| 30 | | 0.05 | | | | | | | | | | |
| 31 | | | | | | | | | | | | |
| Totals | 0.00 | 2.65 | 4.38 | 0.29 | 0.24 | 4.34 | 2.93 | 0.25 | 0.00 | 0.00 | 0.00 | 0.00 |
| | | | | | | | | | | Water Year Total: | | 15.08 |

NOTE: All Values are in units of inches, unless otherwise specified.

LEGEND: A - Acculated Total
E - Estimated
T - Trace, unmeasurable amount of rain

# APPENDIX B

## HYDROLOGIC REPORT 2019 – 2020

## RUNOFF - STREAM GAGING STATION INFORMATION

## RUNOFF – STREAM GAGING STATION INFORMATION

# ALHAMBRA WASH

### Above Klingerman Street

## STATION NO. F81D-R

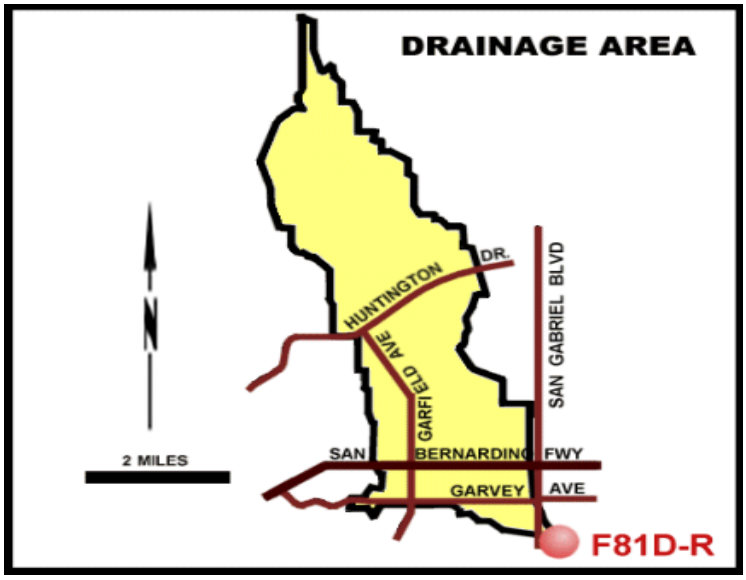


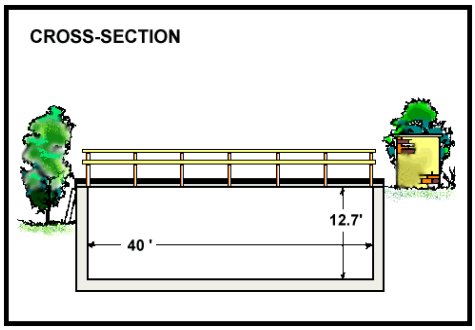


**RECORDER** - 5 min. interval data loger.

**METHOD OF MEASUREMENT** - Wading or from footbridge.

**DRAINAGE AREA** - 15.2 square miles.

**LOCATION** - 250 feet above Klingerman Street and 2650 feet below Garvey Avenue, City of Rosemead.

**REGULATION** - None.

**DIVERSION** - None.

**CHANNEL** - Concrete, rectangular in section, 40.0 feet wide by 12.7 feet deep.

**CONTROL** - Channel forms control.

**LENGTH OF RECORD** - At Station F81-R, January 14, 1930 to September 30, 1934; at Station F81B-R, October 1, 1934 to February 25, 1935; at Station F81C-R February 25, 1935 to April 27, 1936; at Station F81B-R April 27, 1936 to May 22, 1936; at Station F81D-R, September 2, 1936 to date.

**REMARKS -** None.

## RUNOFF – STREAM GAGING STATION INFORMATION

# ARCADIA WASH

### Below Grand Ave

## STATION NO. F317-R

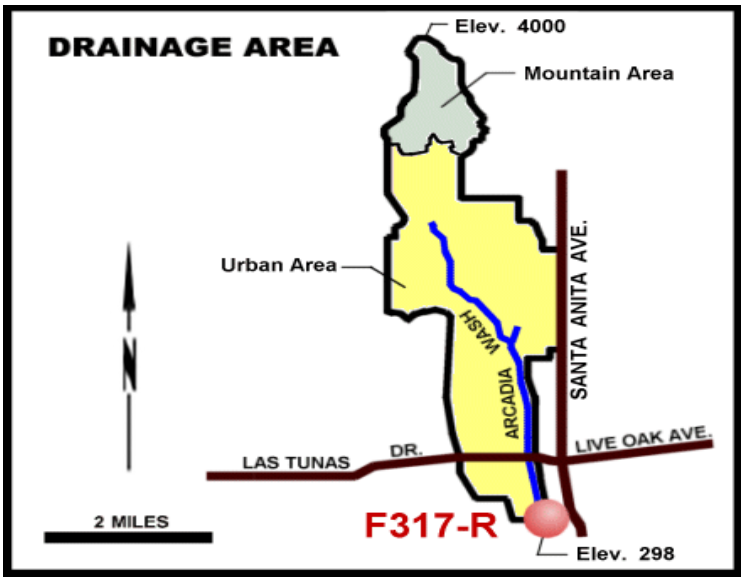


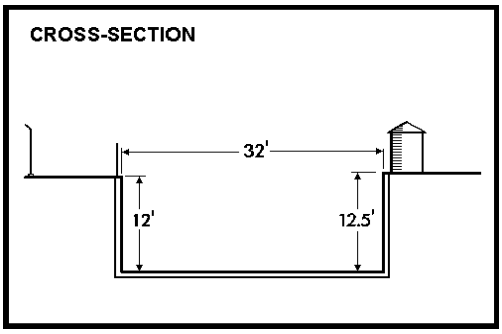


**RECORDER** - 5 min. interval data logger.

**METHOD OF MEASUREMENT** - Low flows measured by wading. High flows measured from upstream side of Grand Avenue bridge.

**DRAINAGE AREA** - 8.5 square miles.

**LOCATION** - On the west wall of Arcadia Wash about 75 feet downstream from centerline of Grand Avenue.

**REGULATION** - Several debris basins located upstream.

**DIVERSION** - None.

**CHANNEL** - Concrete, rectangular section, 32.0 feet wide by 12.0 feet deep.

**CONTROL -** None.

**LENGTH OF RECORD** - December 12, 1955 to date.

**REMARKS** - None.

## RUNOFF – STREAM GAGING STATION INFORMATION

# ARROYO SECO

### Below Devil's Gate Dam

## STATION NO. F277-R

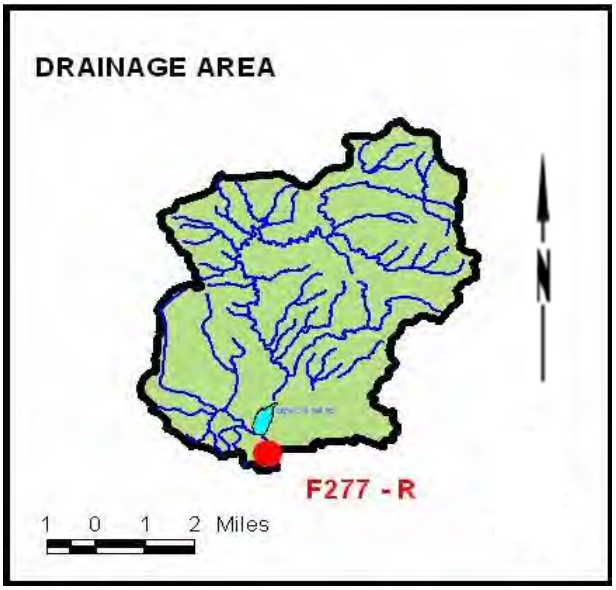


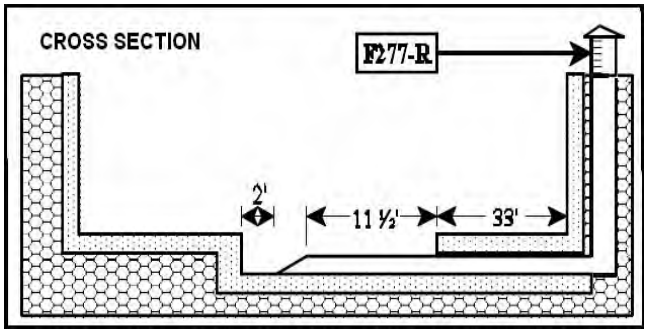


**RECORDER** - 5 min. interval data logger.

**METHOD OF MEASUREMENT** - Wading.

**DRAINAGE AREA** - 32.5 square miles.

**LOCATION** - On the east side of the channel about 0.5 mile below Devil's Gate Dam, and about 0.5 mile above Washington Street, Pasadena. Elevation of Gage is about 926 feet.

**REGULATION** - Flow regulated by Devil's Gate Dam and Pasadena Water Department's Gated Diversion into channel above station.

**DIVERSION** - Pasadena Water Department diverts flow approximately two miles above Devil's Gate Dam for domestic use. Flow may be diverted to channel between Devil's Gate Dam and station from Pasadena Water Department.

**CHANNEL** - Sand and gravel, natural section.

**CONTROL** - Channel forms control.

**LENGTH OF RECORD** - At Station P277-R, November 30, 1942 to September 30, 1980. At station F277, October 01, 1980 to date.

**REMARKS** - Located, constructed, and operated by the Pasadena Water Department January 1940. The operation taken over by the Los Angeles County Flood Control District November 30, 1942 in cooperation with the Pasadena Water Department.

## RUNOFF – STREAM GAGING STATION INFORMATION

# BALLONA CREEK

### Above Sawtelle Blvd

## STATION NO. F38C-R

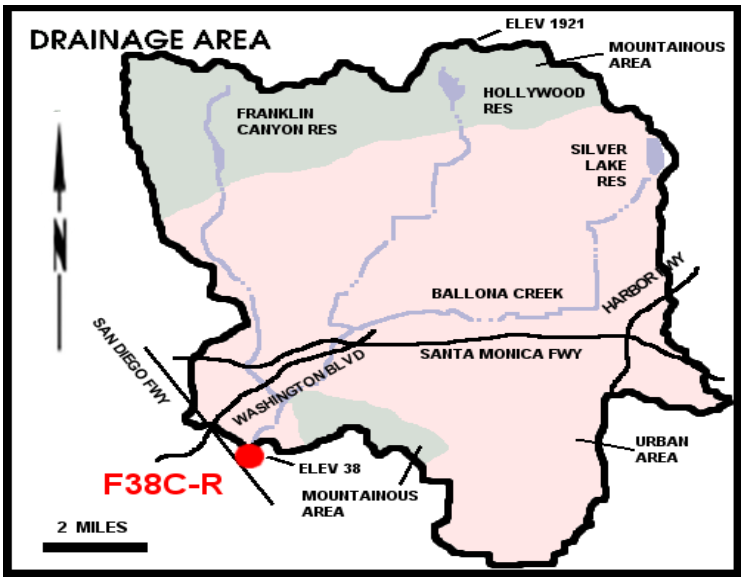


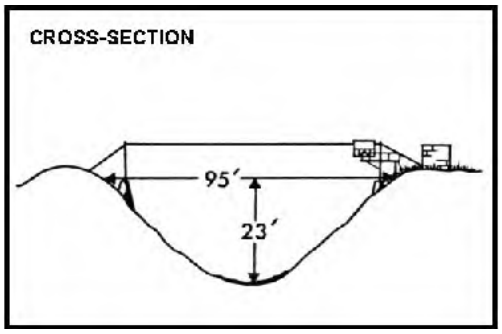


**RECORDER** - Continuous water stage.

**METHOD OF MEASUREMENT** - Wading.

**DRAINAGE AREA** - 88.6 square miles.

**LOCATION** - 530.0 feet above Sawtelle Boulevard, 1.5 miles southwest of Culver City.

**REGULATION** - Stone Canyon Reservoir prior to January, 1951. Upper and Lower Franklin Canyon Reservoir, Hollywood Reservoir, and Silver Lake Reservoir.

**DIVERSION** - None.

**CHANNEL** - Concrete ruble, trapezoidal in section.

**CONTROL** - Channel forms control.

**LENGTH OF RECORD** - At station F38-R, February 27, 1928 to April 27, 1936; at Station F38B-R, May 14, 1936 to August 10, 1967; at Station F38C-R, August 10, 1967 to date.

**REMARKS -** None.

## RUNOFF – STREAM GAGING STATION INFORMATION

# BIG DALTON CREEK

### Below Big Dalton Dam

## STATION NO. F120B-R

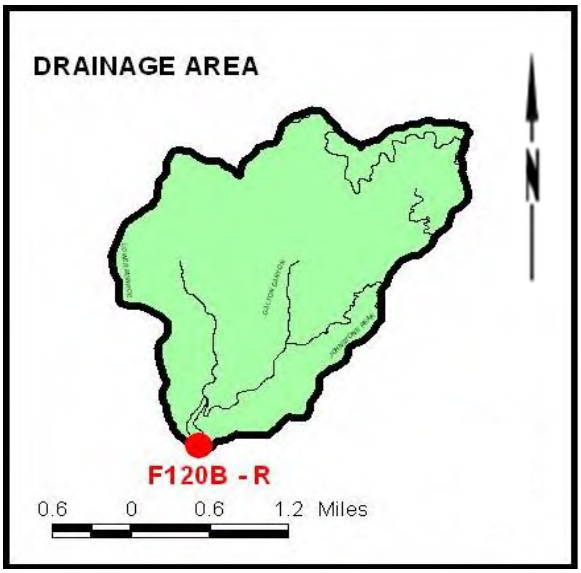


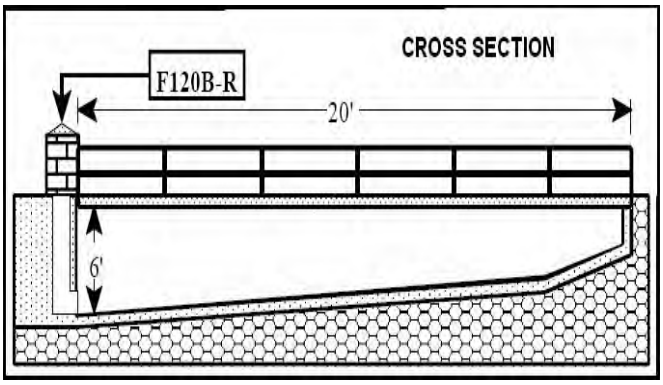


**RECORDER** - Continuous water stage.

**METHOD OF MEASUREMENT** - Wading.

**DRAINAGE AREA** - 4.8 square miles.

**LOCATION** - On the left (southeast) bank about 400 feet below the old toe wall on the downstream side of Big Dalton Dam and about 5 miles northeast of Glendora. Elevation of zero gage height is 1539.63 feet.

**REGULATION** - 4.5 square miles regulated by Big Dalton Dam. 0.3 square miles unregulated flow from KERIL Canyon.

**DIVERSION** - None.

**CHANNEL** - Sand and gravel, natural section.

**CONTROL** - Concrete stabilizer.

**LENGTH OF RECORD** - Reservoir outflow records from October 1929 to June 3, 1940, recorder records from June 3, 1940 to September 30, 1955, from October 1, 1955 to date.

**REMARKS** - None.

## RUNOFF – STREAM GAGING STATION INFORMATION

# BIG ROCK CREEK

**Upstream from Pallett Creek**

## STATION NO. F394-R

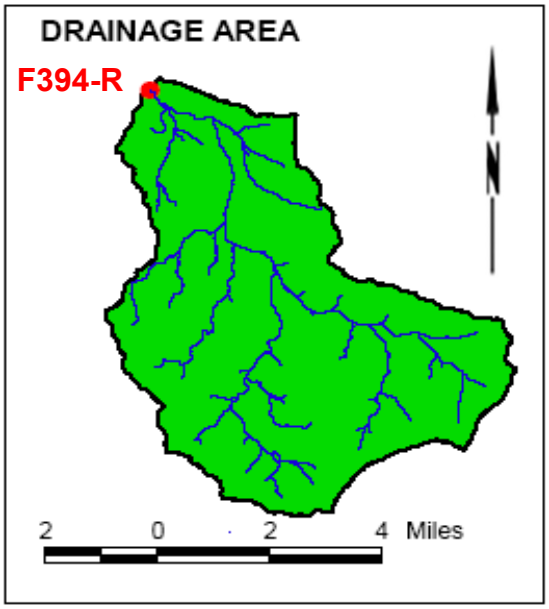


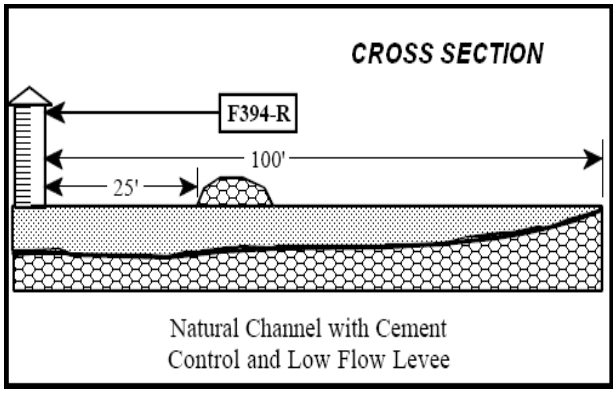


**RECORDER** - Continuous water stage.

**METHOD OF MEASUREMENT** - Wading or from stream gaging.

**DRAINAGE AREA** - 34.3 square miles.

**LOCATION** - 300 feet upstream from confluence with Pallett Creek, and 1.4 miles northwest of Valyermo.

**REGULATION** - None.

**DIVERSION** - None.

**CHANNEL** - Natural flow affected by pumping along creek.

**CONTROL** - Concrete stabilizer.

**LENGTH OF RECORD** - October 1986 to date.

**REMARKS** - None.

## RUNOFF – STREAM GAGING STATION INFORMATION

# BIG TUJUNGA CREEK

### Below Big Tujunga Dam

## STATION NO. F168B-R

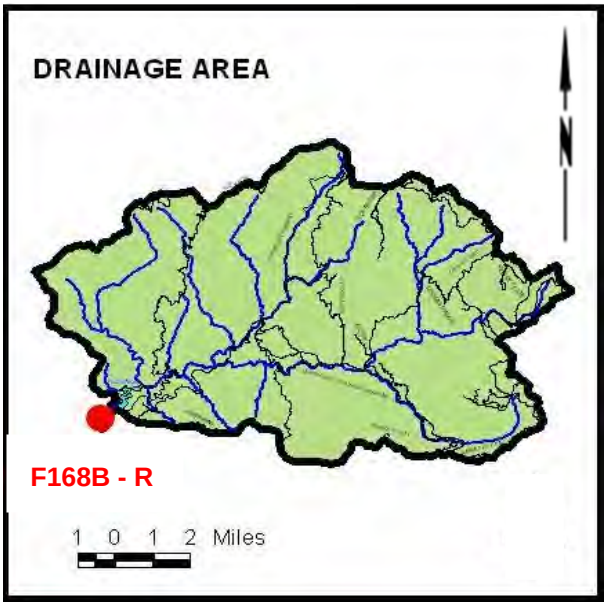


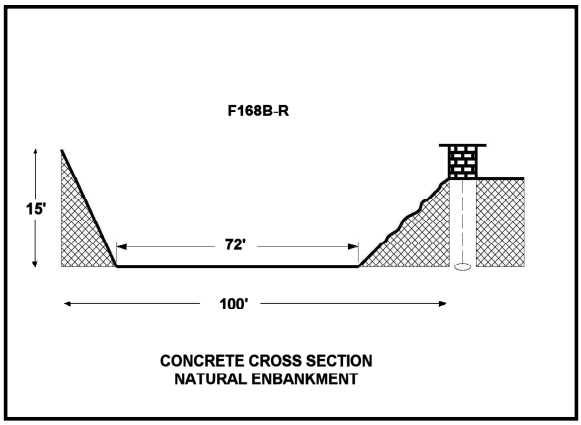


**RECORDER** - Continuous water stage.

**METHOD OF MEASUREMENT** - Wading.

**DRAINAGE AREA** - 82.3 square miles.

**LOCATION** - On the right (northwest) bank, 2800 feet below Big Tujunga Dam and about 12 miles northeast of Sunland, Elevation of zero gage height is 2063.34 feet.

**REGULATION** - Flow regulated by Big Tujunga Dam.

**DIVERSION** - None.

**CHANNEL** - Sand, gravel, and boulders.

**CONTROL** - No artificial Control.

**LENGTH OF RECORD** - Stream measurements from December 8, 1931 to November 7, 1932 and January 20,1938 to May 29, 1938; recorder records from November 8, 1932 to January 13, 1938 and from May 31, 1938 to September 30, 1955, from September 30, 1955 to date.

**REMARKS - No data published from Water Years 2008- 09 thru 2011- 12 due to rehabilitation project.**

## RUNOFF – STREAM GAGING STATION INFORMATION

# BOUQUET CREEK

### Above Bouquet Canyon Road

## STATION NO. F377B-R

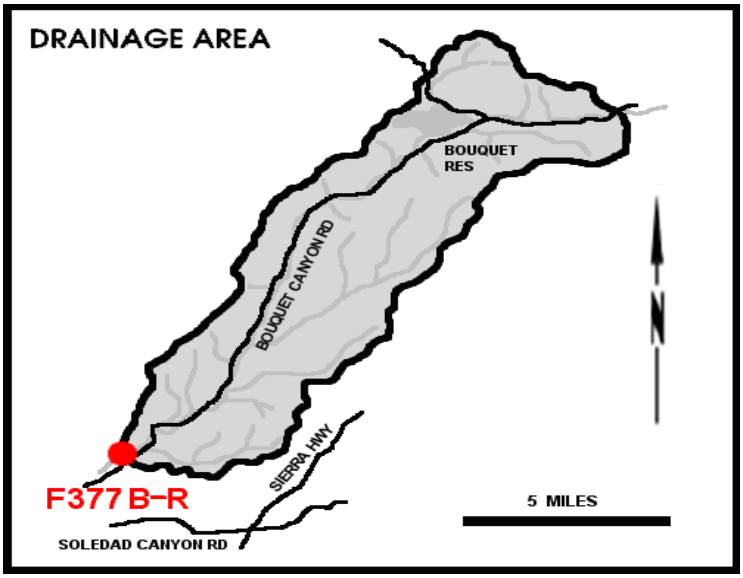


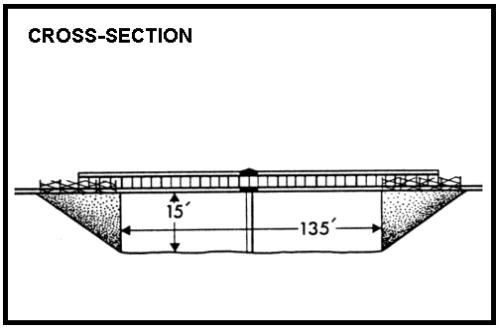


**RECORDER -** Continuous water stage.

**METHOD OF MEASUREMENT -** Wading or from bridge.

**DRAINAGE AREA -** 60.9 square miles.

**LOCATION -** In San Francisco Grant, on left bank, 500 feet upstream from Bouquet Canyon Road bridge, 1.5 miles northeast of Saugus, and 1.7 miles downstream from Haskell Canyon Creek

**REGULATION -** Bouquet Reservoir.

**DIVERSION -** None.

**CHANNEL -** Concrete sides with natural bottom, trapezoidal in section.

**CONTROL -** Concrete stabilizer.

**LENGTH OF RECORD -** At station F377-R, October 11, 1967 to December 19, 2001; at station F377B-R, January 4, 2002 to date.

**REMARKS -** Records fair except for estimated daily discharges, which are poor. Partial regulation by Bouquet Reservoir, capacity 36,500 acre-feet, principally used as equalizing reservoir to city of Los Angeles aqueduct. Some pumping of wells for irrigation upstream from station.

## RUNOFF – STREAM GAGING STATION INFORMATION

# BRADBURY CHANNEL

### Below Central Avenue

## STATION NO. F329-R

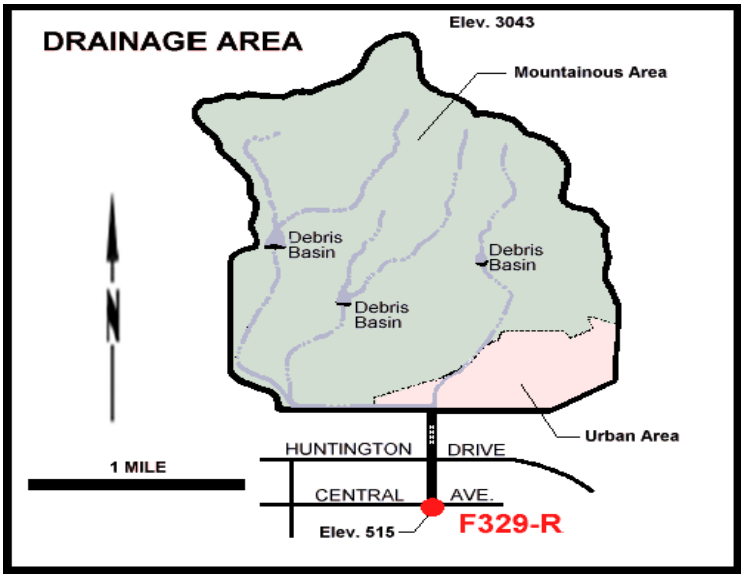


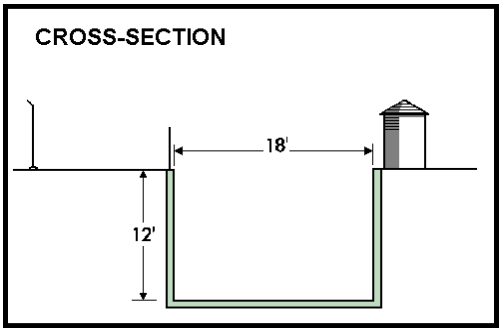


**RECORDER** - 5 min. interval data logger.

**METHOD OF MEASUREMENT** - Low flows measured by wading. High flows measured from footbridge four feet downstream from recorder.

**DRAINAGE AREA** - 3.3 square miles.

**LOCATION** - On the east wall of Bradbury Channel, 200 feet downstream from the centerline of Central Avenue, one mile east of Duarte.

**REGULATION** - Two debris basins located upstream.

**DIVERSION** - None.

**CHANNEL** - Rectangular concrete, 18 feet wide, 12 feet deep.

**CONTROL** - Channel forms control.

**LENGTH OF RECORD** - June 14, 1957 to date.

**REMARKS -** None.

## RUNOFF – STREAM GAGING STATION INFORMATION

# BRANFORD STREET CHANNEL

### Below Sharp Avenue

## STATION NO. F342-R

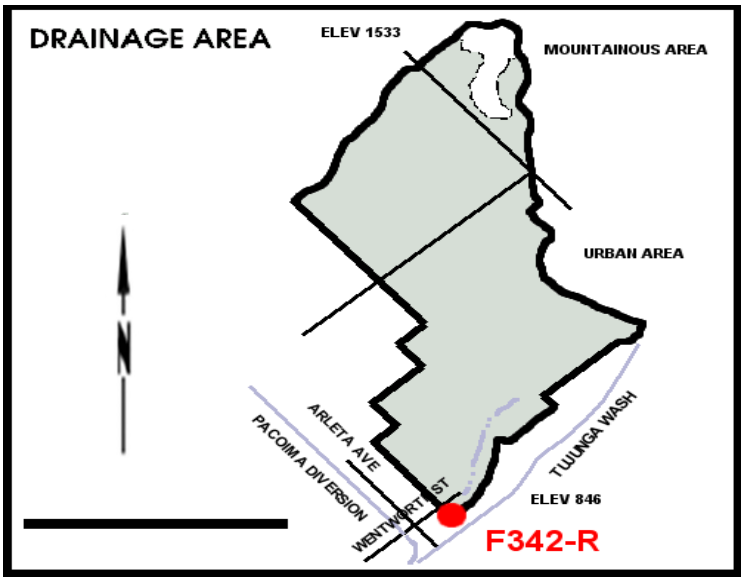


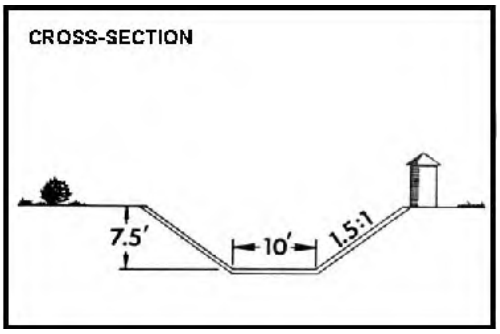


**RECORDER** - Continuous water stage.

**METHOD OF MEASUREMENT** - Low flows measured by wading.

**DRAINAGE AREA** - 5.01 square miles.

**LOCATION** - On the south bank of channel, 125 feet downstream from Sharp Avenue, about 3.6 miles south of San Fernando.

**REGULATION** - Flow from Lopez Creek is diverted to Hansen Dam at the mouth of Lopez Canyon.

**DIVERSION** - None.

**CHANNEL** - Trapezoidal, 10 feet wide at bottom and 7.5 feet deep with 1.5 to 1 side slopes.

**CONTROL** - Channel forms control.

**LENGTH OF RECORD** - January 12, 1962 to date.

**REMARKS -** None.

## RUNOFF – STREAM GAGING STATION INFORMATION

# BURBANK WESTERN STORM DRAIN

**At Riverside Dr.**

## STATION NO. E285-R

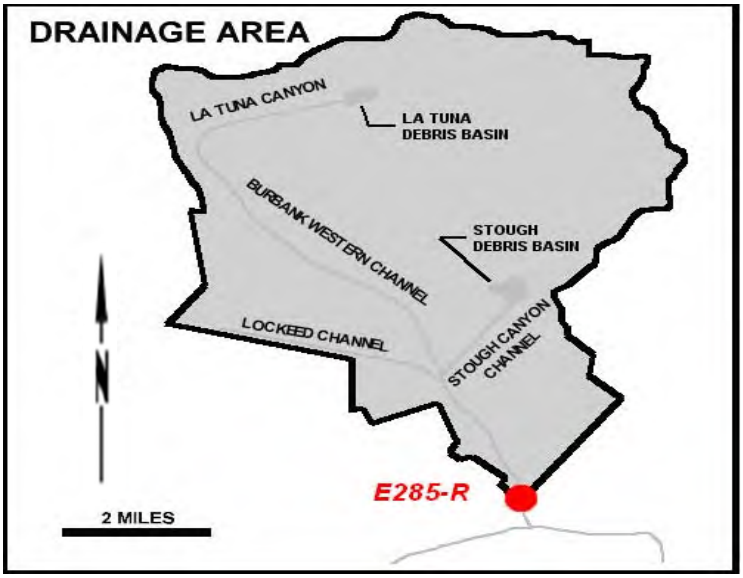


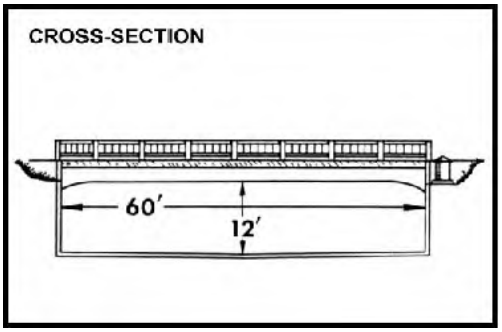


**RECORDER** - Continuous water stage.
**METHOD OF MEASUREMENT** - Wading or from bridge.
**DRAINAGE AREA** - 25.0 square miles.
**LOCATION** - 20 feet upstream from Riverside Drive, Glendale.
**REGULATION** - Several debris basins on tributaries.
**DIVERSION** - None.
**CHANNEL** - Concrete, rectangular section.
**CONTROL** - Channel forms control.
**LENGTH OF RECORD** - October 1, 1949 to date.
**REMARKS** - Operated in cooperation with the USCE.

## RUNOFF – STREAM GAGING STATION INFORMATION

# COMPTON CREEK

**Near Greenleaf Drive.**

## STATION NO. F37B-R

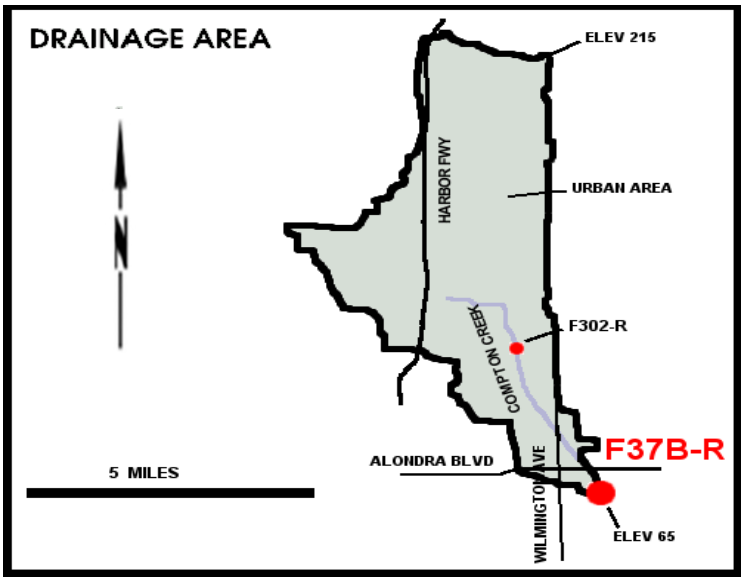


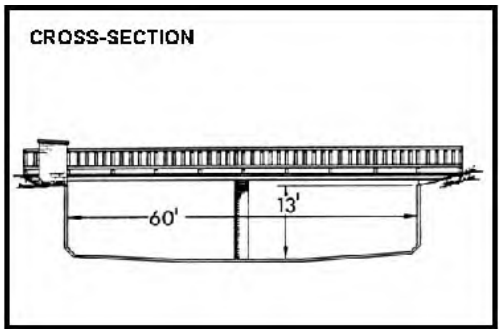


**RECORDER** - Continuous water stage.

**METHOD OF MEASUREMENT** - Wading or from bridge.

**DRAINAGE AREA** - 22.6 square miles.

**LOCATION** - 120.0 feet above Greenleaf Boulevard, 1.5 miles south west of Compton.

**REGULATION** - None.

**DIVERSION** - None.

**CHANNEL** - Concrete, rectangular in section, 60 feet wide by 13 feet deep.

**CONTROL** - Channel forms control.

**LENGTH OF RECORD** - At Station F37-R, January 22, 1928 to June 9, 1938; at Station F37B-R, October 3, 1938 to date.

**REMARKS** - None.

## RUNOFF – STREAM GAGING STATION INFORMATION

# COYOTE CREEK

**Below Spring Street.**

## STATION NO. F354-R

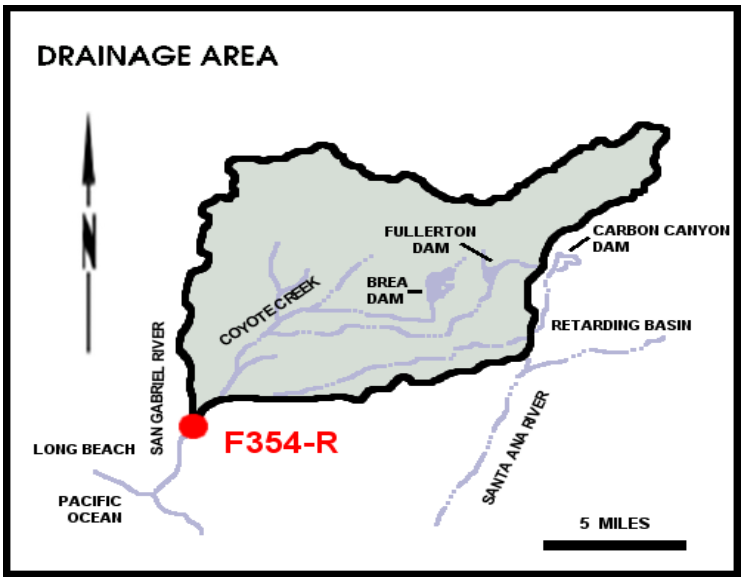


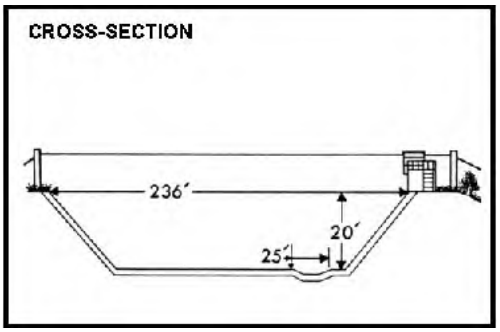


**RECORDER** - Continuous water stage.

**METHOD OF MEASUREMENT** - Wading.

**DRAINAGE AREA** - 185.0 square miles.

**LOCATION** - 241.0 feet below Spring Street, 5.7 miles northeast of Long Beach.

**REGULATION** - Partially regulated by Fullerton Dam, Brea Dam, and Carbon Canyon Dam.

**DIVERSION** - None.

**CHANNEL** - Concrete, trapezoidal in section.

**CONTROL** - Channel forms control.

**LENGTH OF RECORD** - December 19, 1936 to date.

**REMARKS** - Previous gaging stations for record correlation: Station F41-S, December 1, 1928 to January 14, 1930; Station F41-R, January 14, 1930 to October 30, 1936; Station F41B-R, October 30, 1936 to February 17, 1937; Station F41C-R, February 18, 1937 to February 8, 1956; Station F320-R, February 9, 1956 to July 2, 1965; At Station F354-R October 1, 1963 to date.

## RUNOFF – STREAM GAGING STATION INFORMATION

# DALTON WASH

### At Merced Avenue

## STATION NO. F274B-R

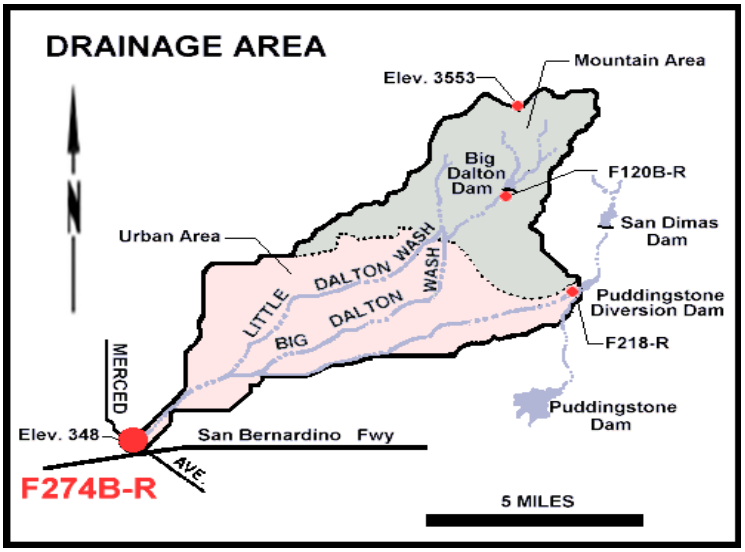


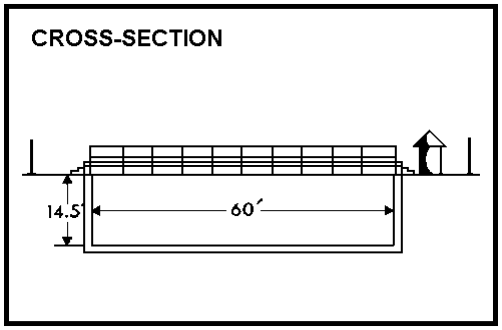


**RECORDER** - 5 min. interval data logger.

**METHOD OF MEASUREMENT** - Low flows measured by wading. High flows measured from footbridge 100 feet from station.

**DRAINAGE AREA** - 35.95 square miles.

**LOCATION** - On the west bank and upstream of Merced Avenue about 150 feet, about one-half mile above the junction with Walnut Wash and about one mile south of Baldwin Park.

**REGULATION** - Partly regulated by Big Dalton Dam, San Dimas Dam, Puddingstone Diversion Dam, Big Dalton Spreading Grounds, Little Dalton Spreading Grounds, Big Dalton Debris Basin, Little Debris Basin, and Irwindale Spreading Grounds.

**DIVERSION** - None.

**CHANNEL** - Concrete, rectangular section.

**CONTROL** - Channel forms control.

**LENGTH OF RECORD** – At station F274, October 1940 to September 1958; at station F274B-R, October 1, 1958 to date.

**REMARKS** - Flow may include imported water originating at San Dimas.

## RUNOFF – STREAM GAGING STATION INFORMATION

# EATON WASH

**At Loftus Drive.**

## STATION NO. F318-R

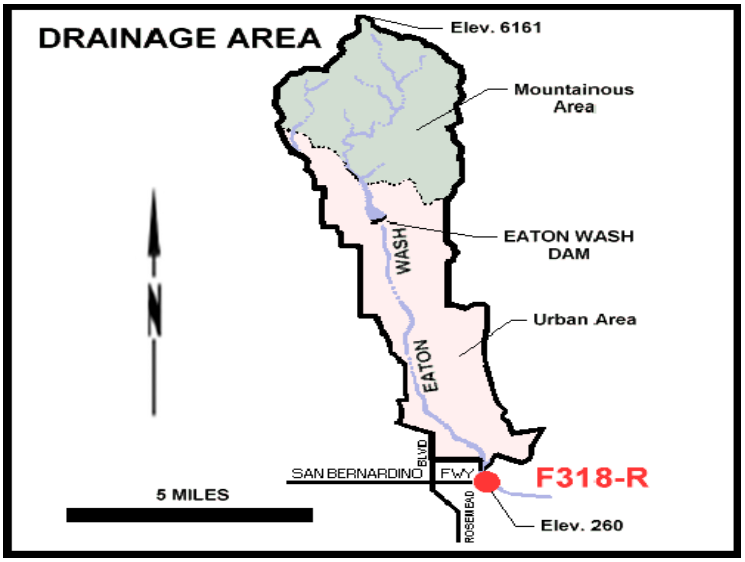


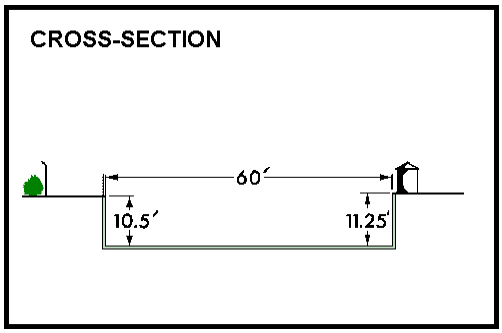


**RECORDER** - 5 min. interval data logger.

**METHOD OF MEASUREMENT** - Low flows measured by wading. High flows measured from upstream side of East Loftus Drive bridge.

**DRAINAGE AREA** - 22.8 square miles.

**LOCATION** - On the west wall of the channel 52 feet above the centerline of East Loftus Drive bridge, 1.3 miles west of El Monte.

**REGULATION** - Partly regulated by Eaton Dam.

**DIVERSION** - The Pasadena Water Department diverts some water just above the mouth of Eaton Canyon. The Flood Control District Diverts water to spreading grounds below Eaton Dam and below Huntington Drive.

**CHANNEL** - Rectangular concrete, 60 feet wide, 11.3 feet.

**CONTROL** - Channel forms control.

**LENGTH OF RECORD** - 1956 to date.

**REMARKS -** None.

## RUNOFF – STREAM GAGING STATION INFORMATION

# EATON WASH

### Below Eaton Wash Dam

## STATION NO. F271-R

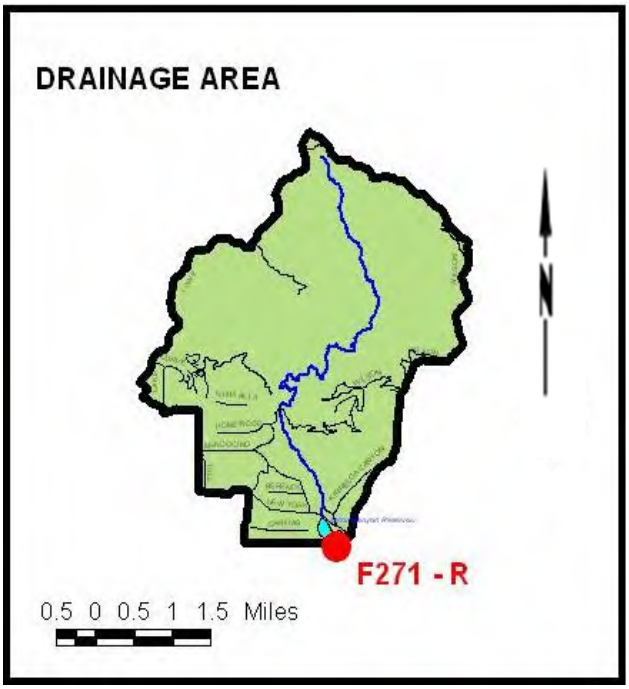


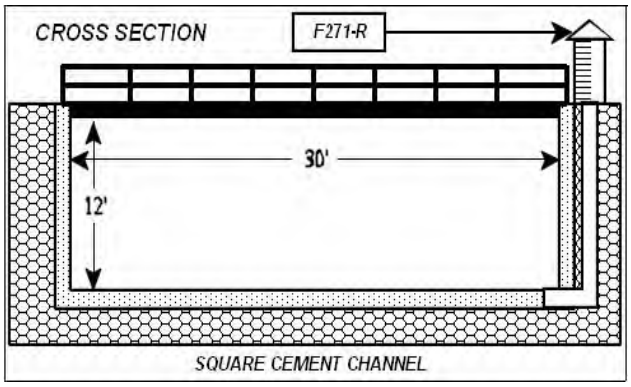


**RECORDER** - Continuous water stage.

**METHOD OF MEASUREMENT** - Wading.

**DRAINAGE AREA** - 12.4 square miles.

**LOCATION** - On the right (west) bank of the concrete outlet channel 190 feet below the beginning of the open section at the base of Eaton Wash Dam. Elevation of gage about 840 feet.

**REGULATION** - Flow regulated by Eaton Wash Dam.

**DIVERSION** - Pasadena Water Department diverts flow above the mouth of Eaton Canyon.

**CHANNEL** - Concrete, rectangular section.

**CONTROL** - Channel forms control.

**LENGTH OF RECORD** - Reservoir outflow records from February 2, 1937 to October 10, 1940. Recorder records from October 10, 1940 to September 30, 1955, from September 30, 1955 to date.

**REMARKS** - None.

## RUNOFF – STREAM GAGING STATION INFORMATION

# FISH CREEK

**Above mouth of canyon.**

## STATION NO. U7-R

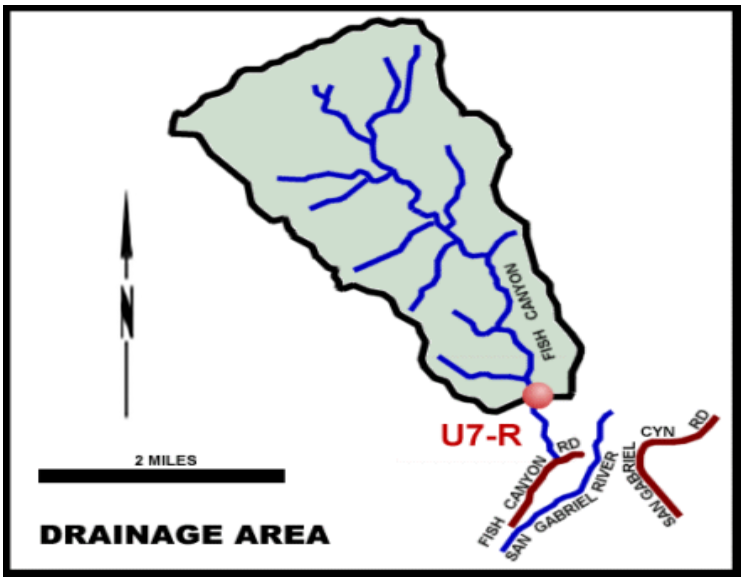


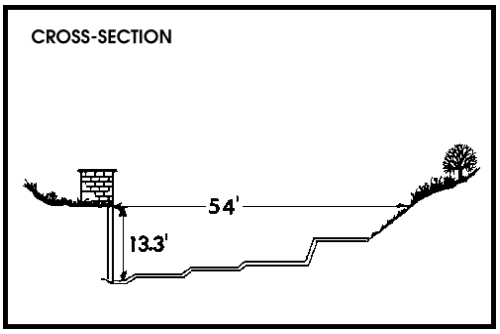


**RECORDER** - 5 min. interval data logger.
**METHOD OF MEASUREMENT** - Wading.
**DRAINAGE AREA** - 6.36 square miles.
**LOCATION** - 0.8 mile upstream of mouth of canyon and 3.0 miles northeast of Duarte.
**REGULATION** - None.
**DIVERSION** - None.
**CHANNEL** - Natural, rock and gravel.
**CONTROL** - Concrete control.
**LENGTH OF RECORD** - July to September 1916; July 1917 to date.
**REMARKS** - Operated and maintained by USGS until October 1, 1971.

## RUNOFF – STREAM GAGING STATION INFORMATION

# LITTLE ROCK CREEK

**Above Little Rock Dam.**

## STATION NO. L1-R

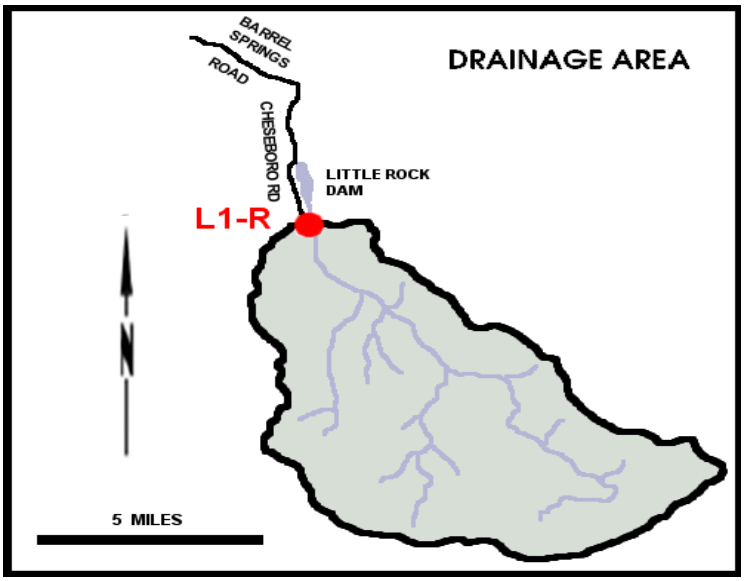


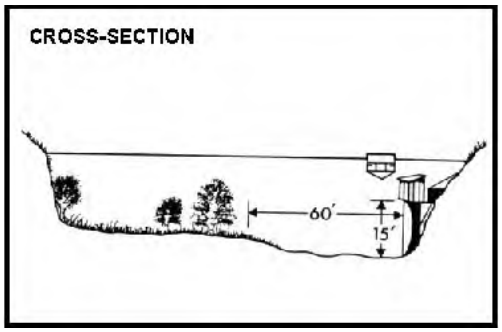


**RECORDER** - Continuous water stage.
**METHOD OF MEASUREMENT** - Stream gaging.
**DRAINAGE AREA** - 49.2 square miles.
**LOCATION** - 2.0 miles above Little Rock Dam, 5.0 miles south of Little Rock.
**REGULATION** - None.
**DIVERSION** - None.
**CHANNEL** - Sand, gravel, and boulder, natural in section.
**CONTROL** - Channel forms control.
**LENGTH OF RECORD** - October 1, 1930 to date.
**REMARKS** - None.

## RUNOFF – STREAM GAGING STATION INFORMATION

# LIVE OAK CREEK

**Below Live Oak Dam.**

## STATION NO. F356-R

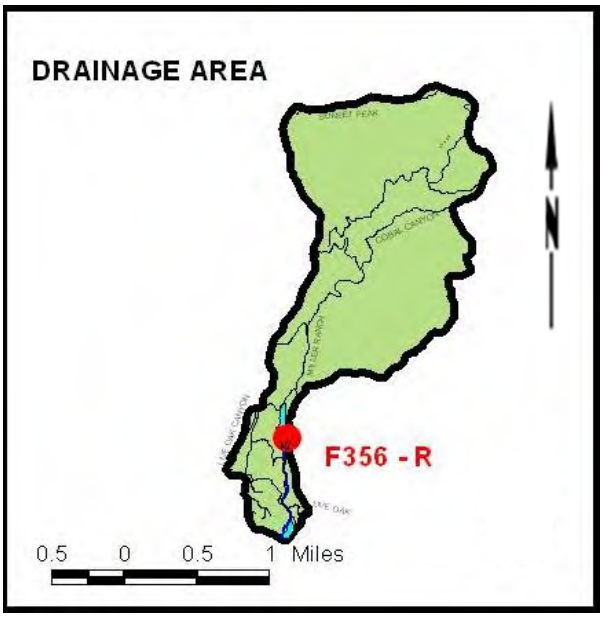


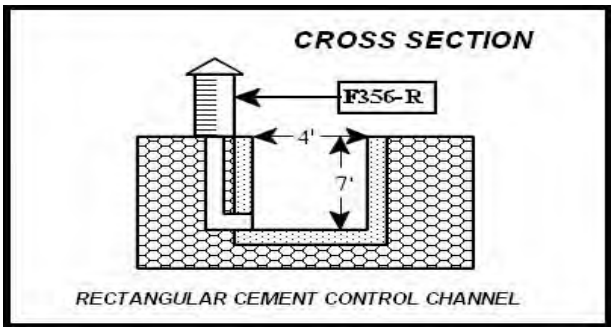


**RECORDER** - Continuous water stage.

**METHOD OF MEASUREMENT** - Wading.

**DRAINAGE AREA** - 2.28 square miles.

**LOCATION** - On the right (west) bank of stream, 0.5 mile above mouth of canyon and 100 feet below Live Oak Dam, about 2.5 miles northeast of La Verne. Elevation of gage 1427.01 feet.

**REGULATION** - Flow regulated by Live Oak Dam, spillway enter canyon below station and are not included in these records.

**DIVERSION** - None.

**CHANNEL** - Natural channel.

**CONTROL** - San Dimas type flume.

**LENGTH OF RECORD** - At Station F356-R from November 29, 1963 to September 30, 1965, for prior records (beginning January 1928) see Station F31-R, Live Oak Creek near mouth of canyon, and from September 30, 1965 to date.

**REMARKS** - None.

## RUNOFF – STREAM GAGING STATION INFORMATION

# LOS ANGELES RIVER

### Below Wardlow River Road.

## STATION NO. F319-R

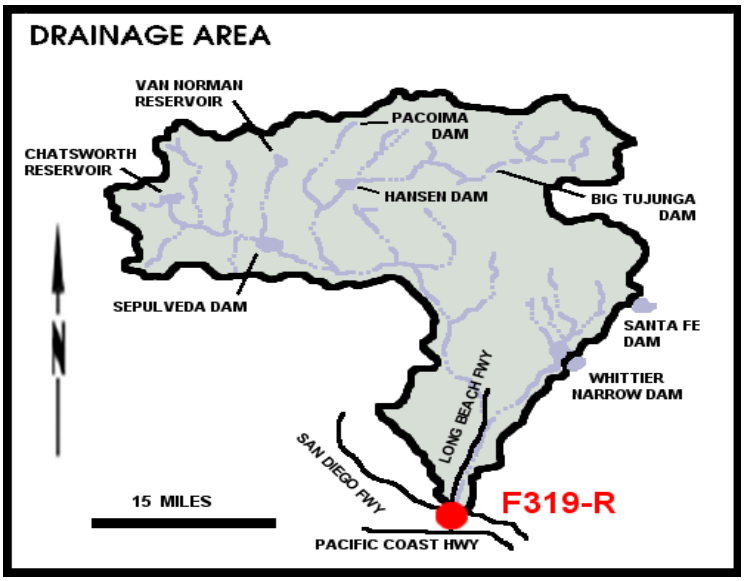


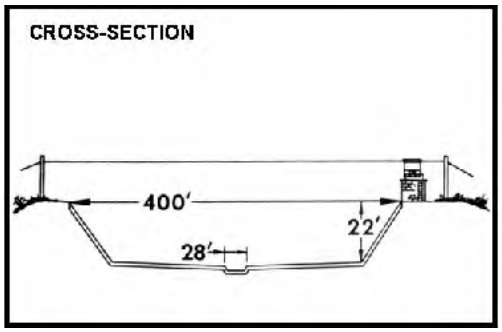


**RECORDER** - Continuous water stage.

**METHOD OF MEASUREMENT** - Wading.

**DRAINAGE AREA** - 815.0 square miles.

**LOCATION** - 900.0 feet below Wardlow Road, Long Beach.

**REGULATION** - Flow is subject to the same regulation as Station F34D-R and P45B-R.

**DIVERSION** - Flows diverted to Dominguez Gap Spreading Grounds.

**CHANNEL** - Trapezoidal, concrete, 302.0 feet wide at bottom with 2.25:1 side slopes. Low flow channel 28.0 feet wide by 1.0 foot deep in center of channel.

**CONTROL** - Channel forms control.

**LENGTH OF RECORD** - At Station F180-R, October 31, 1931 to January 13, 1956; at Station F319-R, January 13, 1956 to date.

**REMARKS** - Prior to 1931, see Station F36-R.

## RUNOFF – STREAM GAGING STATION INFORMATION

# LOS ANGELES RIVER

**At Tujunga Avenue.**

## STATION NO. F300-R

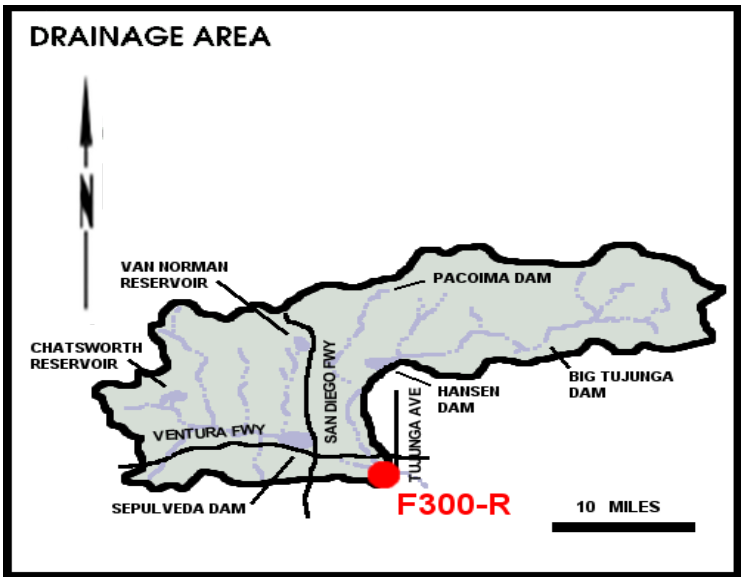


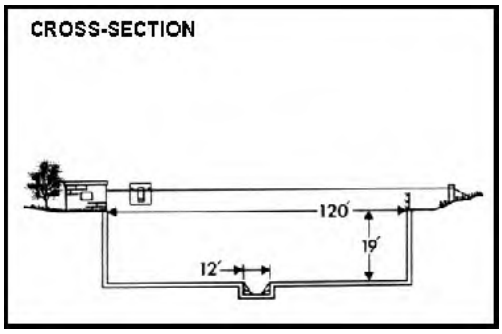


**RECORDER** - Continuous water stage.

**METHOD OF MEASUREMENT** - Wading.

**DRAINAGE AREA** - 401.0 square miles.

**LOCATION** - 200.0 feet above Tujunga Avenue bridge, Studio City.

**REGULATION** - Flow regulated by Sepulveda, Big Tujunga, Hansen, Pacoima Dams, Lopez Debris Dam, and Project No. 85 Diversion.

**DIVERSION** - None.

**CHANNEL** - Concrete, retangular section, 120 feet wide by 19 feet deep.

**CONTROL** - Channel forms control.

**LENGTH OF RECORD** - May 8, 1950 to date.

**REMARKS** - Subject to diversions at mouth of Big Tujunga and Pacoima Canyons for irrigation, at Big Tujunga, Branford, Hansen, and Pacoima Spreading Grounds.

## RUNOFF – STREAM GAGING STATION INFORMATION

# LOS ANGELES RIVER

### Above Arroyo Seco

## STATION NO. F57C-R

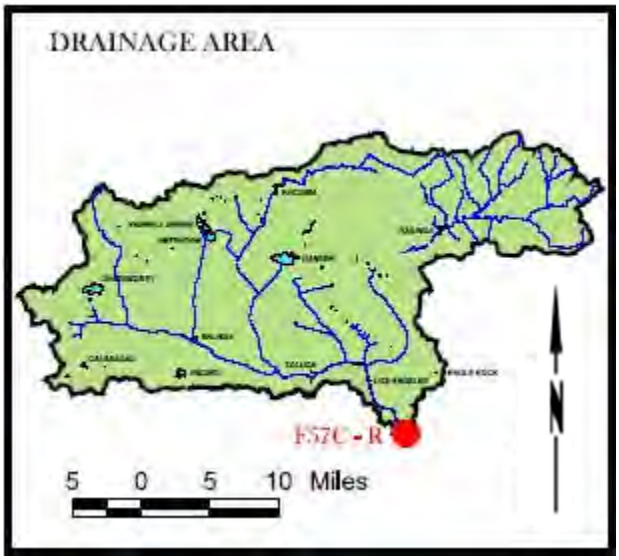


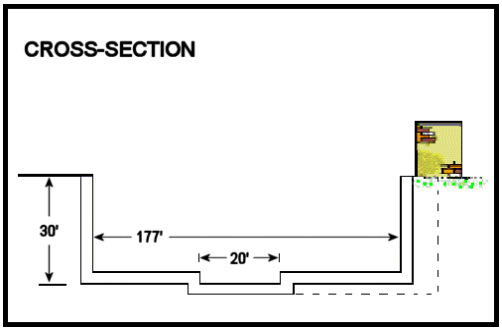


**RECORDER** - Continuous water stage.

**METHOD OF MEASUREMENT** - Wading.

**DRAINAGE AREA** - 511.0 square miles.

**LOCATION** - 800 feet above the confluence of the Arroyo Seco with the Los Angeles River, Los Angeles.

**REGULATION** - Partially regulated by Sepulvedo, Pacoima, Big Tujunga, and Hansen Dams; and by several spreading grounds, reservoirs, and debris basins.

**DIVERSION** - None.

**CHANNEL** - Concrete, rectangular in section, with a trapezoidal low-flow channel.

**CONTROL** - Channel forms control.

**LENGTH OF RECORD** - At Station F57-R, December 5, 1929 to May 26, 1938; at Station F57B-R, April 5, 1939 to December 8, 1939; at Station F57C-R, December 8, 1939 to date.

**REMARKS** - Subject to diversions from Big Tujunga Creek, and other diversions for domestic and irrigation uses.

## RUNOFF – STREAM GAGING STATION INFORMATION

# MALIBU CREEK

**Below Cold Creek.**

## STATION NO. F130-R

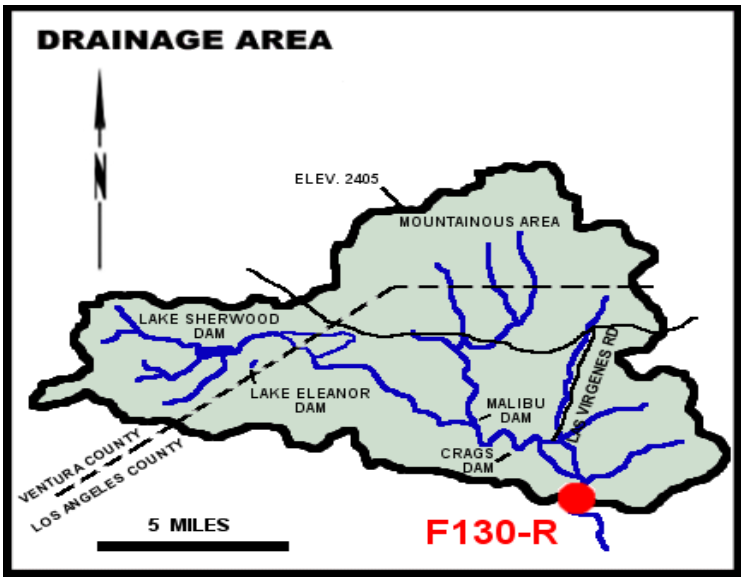


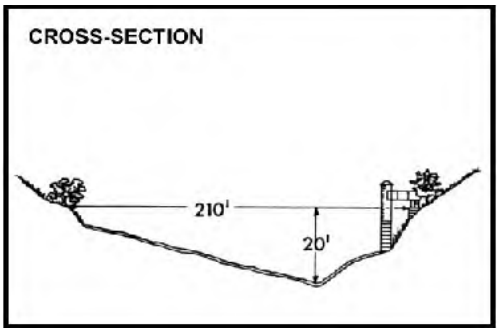


**RECORDER** - 5 min. interval data logger.

**METHOD OF MEASUREMENT** - Wading.

**DRAINAGE AREA** - 104.96 square miles.

**LOCATION** - 0.2 mile downstream of Cold Creek, 6.0 miles southwest of Calabasas.

**REGULATION** - Lake Sherwood Dam, Lake Eleanor Dam, Malibu Lake Dam and Crags Dam. Other small recreational dams affect low summer flows.

**DIVERSION** - None.

**CHANNEL** - Coarse sand and gravel, lines with trees and brush, natural in section.

**CONTROL** - Concrete stabilizer.

**LENGTH OF RECORD** - January 17, 1931 to date.

**REMARKS** - Cableway washed out on January 25, 1969, no high flow measurements since that date.

## RUNOFF – STREAM GAGING STATION INFORMATION

# MESCAL CREEK

**At mouth of canyon.**

## STATION NO. F395-R

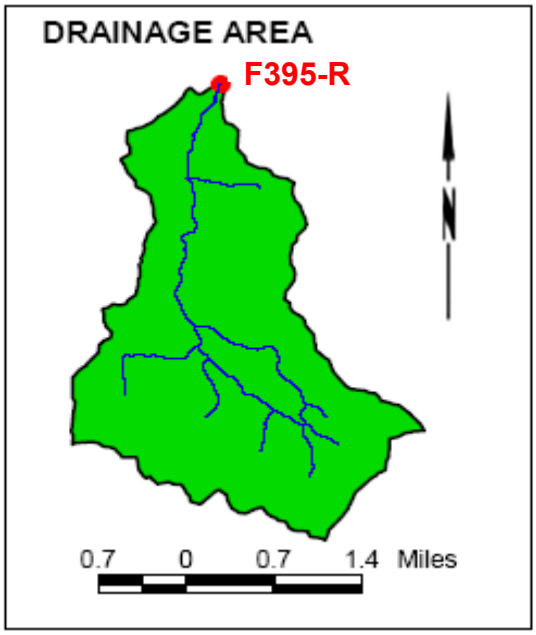


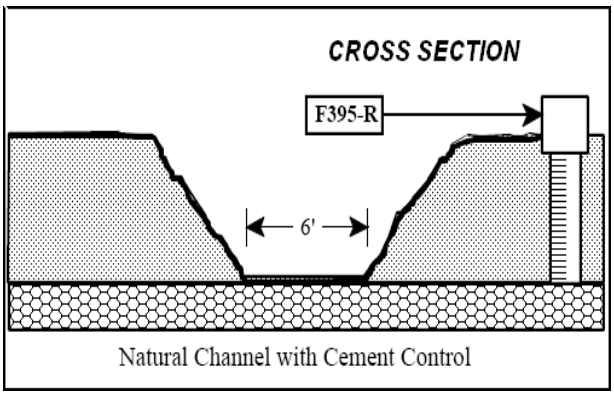


**RECORDER** - Continuous water stage.

**METHOD OF MEASUREMENT** - Wading.

**DRAINAGE AREA** - 5.41 square miles.

**LOCATION** - On left bank, 75 feet east of Mescal Canyon Motorway, 2.7 miles south of Fort Tejon Road, and 3.8 miles southwest of Pinon Hills.

**REGULATION** - Slight regulation of low flow by Jackson Lake.

**DIVERSION** - One small diversion upstream from station for domestic use.

**CHANNEL** - Natural channel.

**CONTROL** - Concrete stabilizer.

**LENGTH OF RECORD** - October 2001 to date.

**REMARKS** - None.

## RUNOFF – STREAM GAGING STATION INFORMATION

# MINT CANYON CREEK

**At Sierra Highway.**

## STATION NO. F328B-R

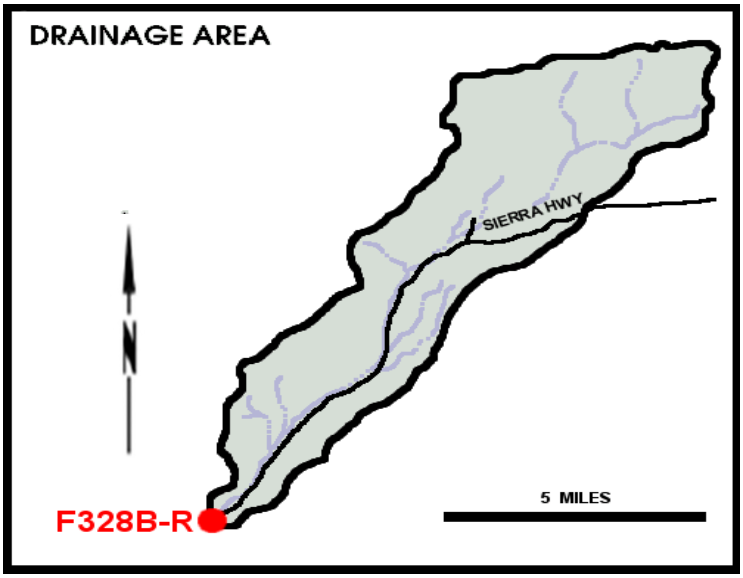


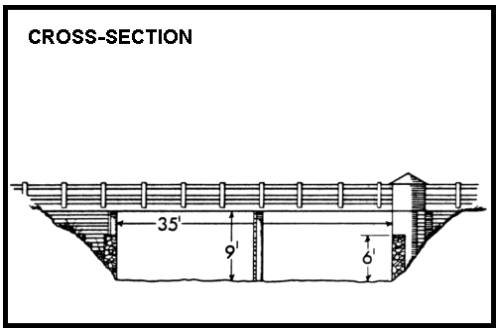


**RECORDER** - Continuous water stage.

**METHOD OF MEASUREMENT** - Wading.

**DRAINAGE AREA** - 28.00 square miles.

**LOCATION** - On left bank, on upstream side of Sierra Highway bridge, 1.6 miles upstream from confluence with Santa Clara River, and 3.3 miles east of Saugus.

**REGULATION** - None.

**DIVERSION** - None.

**CHANNEL** - Natural, sand and gravel.

**CONTROL** - Concrete control at downstream end of bridge.

**LENGTH OF RECORD** - At station F328-R, October 26, 1956 to October 1, 2001, at station F328B-R, November 4, 2001 to date.

**REMARKS** - Station F328B-R.

## RUNOFF – STREAM GAGING STATION INFORMATION

# MONTEBELLO STORM DRAIN

**Above Rio Hondo.**

## STATION NO. F181-R

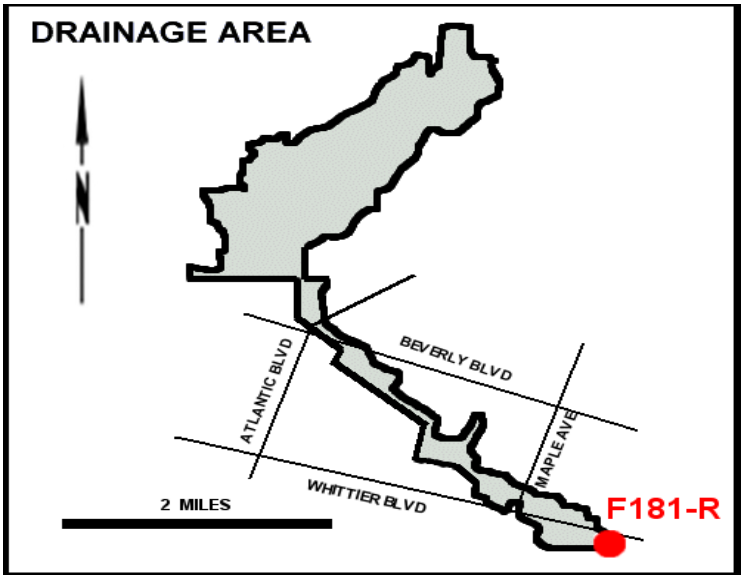


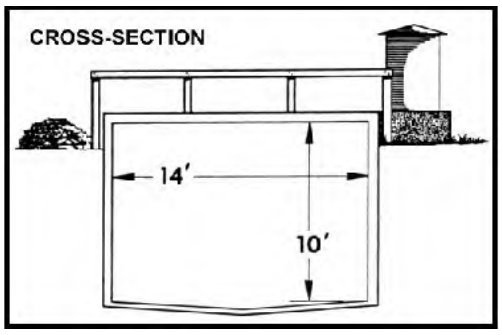


**RECORDER** - Continuous water stage.
**METHOD OF MEASUREMENT** - Wading or from footbridge.
**DRAINAGE AREA** - 9.6 square miles.
**LOCATION** - 150.0 feet east of Mines Avenue and 500.0 feet west of Rio Hondo.
**REGULATION** - None.
**DIVERSION** - None.
**CHANNEL** - 14.0 foot by 10.0 foot concrete, box section.
**CONTROL** - Channel forms control.
**LENGTH OF RECORD** - January 12, 1932 to date.
**REMARKS** - May be affected by backwater during flood flows.

## RUNOFF – STREAM GAGING STATION INFORMATION

# PACOIMA CREEK

**Below Pacoima Dam.**

## STATION NO. F118C-R

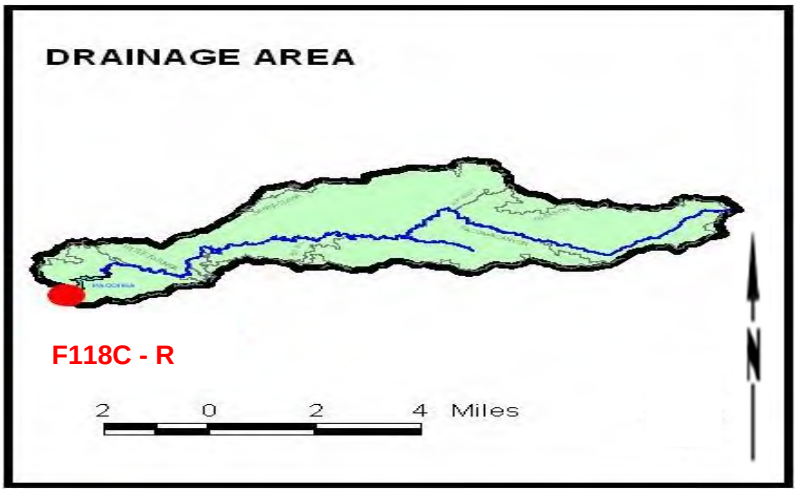


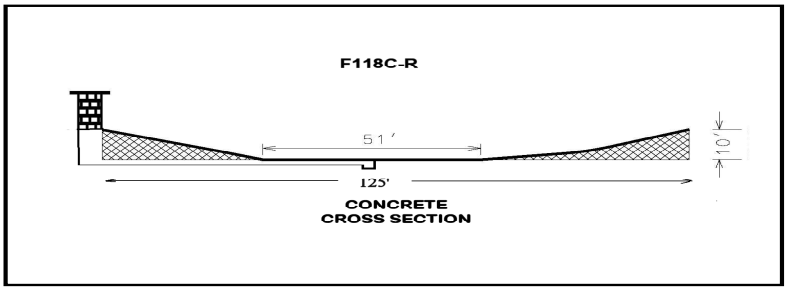


**RECORDER** - Continuous water stage.

**METHOD OF MEASUREMENT** - Wading or from bridge.

**DRAINAGE AREA** - 28.2 square miles.

**LOCATION** - East of San Fernando, and about 500 feet downstream from Pacoima Dam, former station F118-R was approximately 450 feet downstream, former station U13-R was approximately 0.5 mile downstream. Elevation of gage, about 1650 feet.

**REGULATION** - Regulated by Pacoima Dam, station F118-R and F118B-R do not include spillway discharges, station U13-R was so located that it would have included spillway discharge.

**DIVERSION** - Water passing over Pacoima Dam spillway enters Pacoima Creek below station F118-R.

**CHANNEL** - Gravel and boulders.

**CONTROL** - Channel forms control.

**LENGTH OF RECORD** - At Station U13-R, Pacoima Creek near San Fernando, California, at office of USGS, water resources branch, Los Angeles, from March 1916 to September 1929, from October 1, 1929 to March 23, 1933, records based on Dam outflow records and gage readings at the marshal flume below Pacoima Dam, these records are available at the office of the Los Angeles County Flood Control District, at Station F118-R March 24, 1933 to February 1,1935, at Station F118B-R February 9, 1935 to April 28, 1937 and June 25, 1937 to June 15, 1943, and from September 15, 1943 to June 30, 2012, at Station F118C-R from July 1, 2012 to date.

**REMARKS** - Located, constructed and operated by the Los Angeles County Flood Control District in cooperation with the USGS, Water Resources Branch.

## RUNOFF – STREAM GAGING STATION INFORMATION

# PACOIMA DIVERSION

**At Branford Street.**

## STATION NO. F305-R

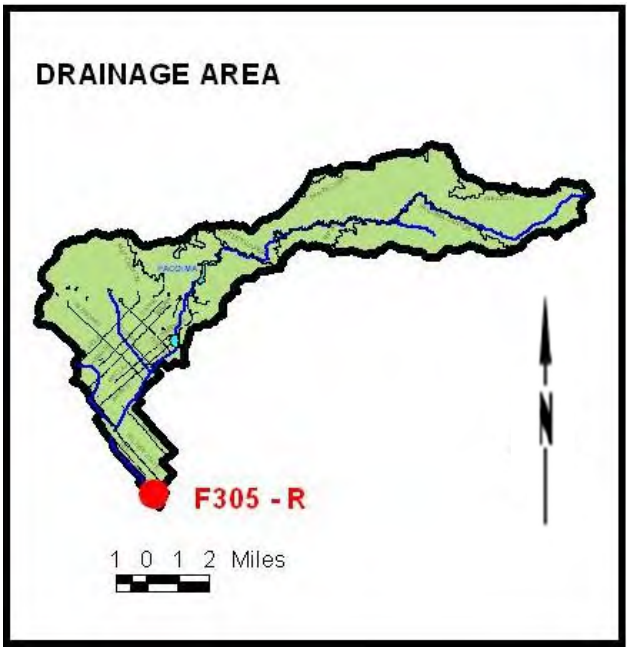


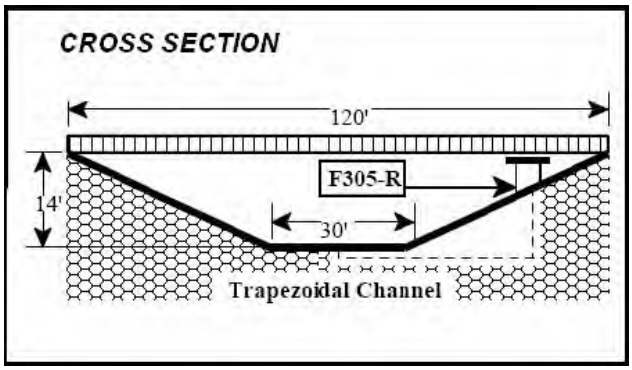


**RECORDER** - Continuous water stage.

**METHOD OF MEASUREMENT** - Wading or from footbridge.

**DRAINAGE AREA** - 48.8 square miles.

**LOCATION** - On the left (northeasterly) bank of the channel, 35 feet above Branford street bridge. Elevation of zero gage height 844 feet.

**REGULATION** - Flow regulated by Pacoima Dam and Pacoima Spreading Grounds.

**DIVERSION** - Small diversions for irrigation near mouth of canyon, water diverted to Lopez Basin and Pacoima Spreading Grounds during spreading operations.

**CHANNEL** - Trapezoidal concrete, with grouted rock walls.

**CONTROL** - Channel forms control.

**LENGTH OF RECORD** - October 30, 1953 to September 30, 1967, from October 1, 1988 to date.

**REMARKS** - Located and constructed by the Corps of Engineers, Department of Army, operated by the Los Angeles County Flood Control District.

## RUNOFF – STREAM GAGING STATION INFORMATION

# PALLETT CREEK

**At Valyermo Highway.**

## STATION NO. F122-R

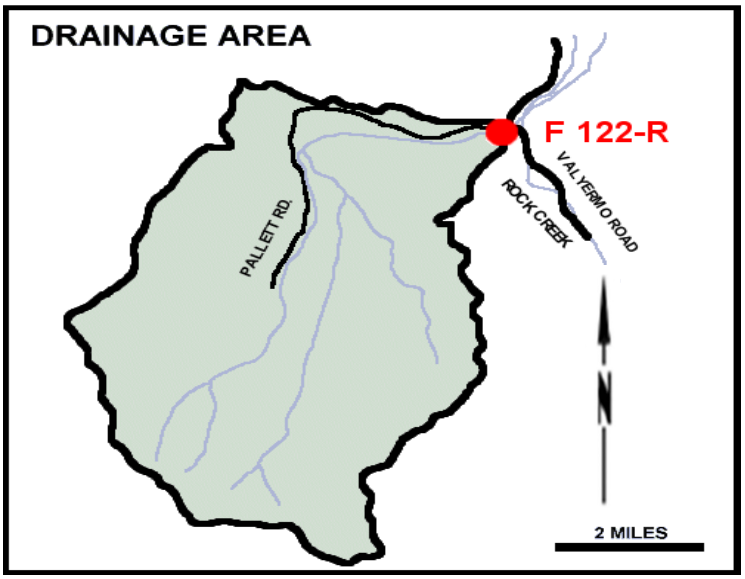


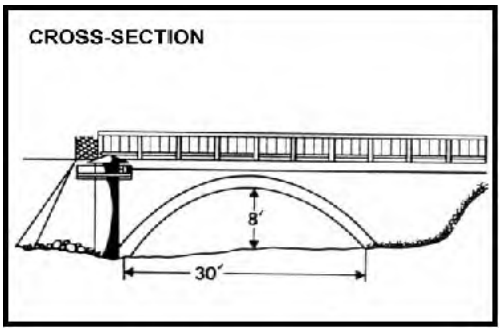


**RECORDER** - Continuous water stage.

**METHOD OF MEASUREMENT** - Wading or from bridge.

**DRAINAGE AREA** - 15.8 square miles.

**LOCATION** - Upstream side of Valyermo Highway bridge, 5.0 miles southeast of Pearblossom.

**REGULATION** - None.

**DIVERSION** - None.

**CHANNEL** - Sand and gravel, natural section.

**CONTROL** - Channel forms control for low flows; bridge form control for high flows.

**LENGTH OF RECORD** - At Station F122-S, December 29, 1930 to October 31, 1961; at Station F122-R, October 31, 1961 to date.

**REMARKS** - None.

## RUNOFF – STREAM GAGING STATION INFORMATION

# RIO HONDO

**Above Stuart and Gray Road.**

## STATION NO. F45B-R

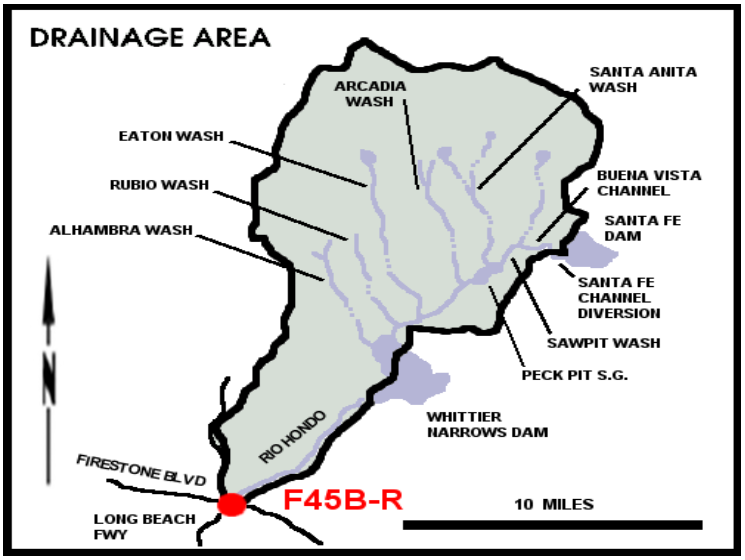


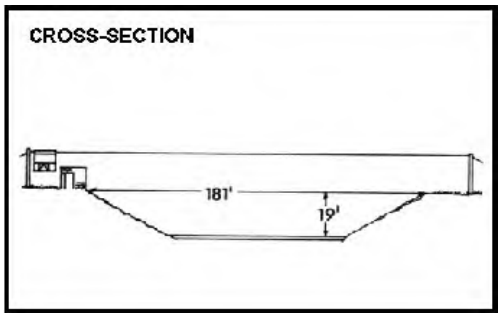


**RECORDER** - Continuous water stage.

**METHOD OF MEASUREMENT** - Wading.

**DRAINAGE AREA** - 140.0 square miles.

**LOCATION** - 0.6 mile upstream of the confluence of Rio Hondo and Los Angeles River, 1.5 miles west of Downey.

**REGULATION** - Partially regulated by Sierra Madre, Santa Anita, Sawpit, Eaton, Santa Fe, and Whittier Narrows Dams, several debris basins, and spreading grounds.

**DIVERSION** - None.

**CHANNEL** - Concrete with rip-rap side slopes, trapezoidal in section.

**CONTROL** - Channel forms control.

**LENGTH OF RECORD** - At Station F45-R, March 1, 1928 to April 18, 1951; at Station F45B-R, October 31, 1951 to date.

**REMARKS** - Subject to diversions from Eaton Creek, Monrovia Creek, Sawpit Creek, Little Santa Anita Canyon, and other locations for irrigation and spreading. High flows from San Gabriel River may flow into Rio Hondo above Whittier Narrows Dam.

## RUNOFF – STREAM GAGING STATION INFORMATION

# RIO HONDO

### Below Lower Azusa Avenue.

## STATION NO. F192B-R

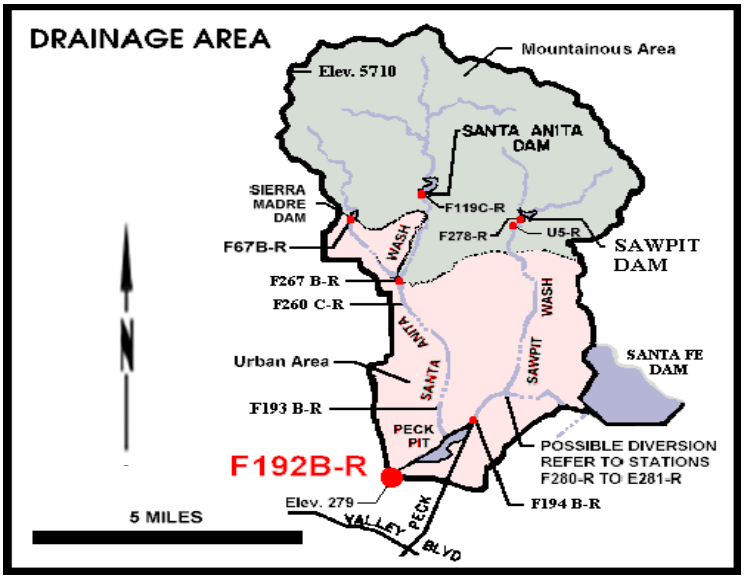


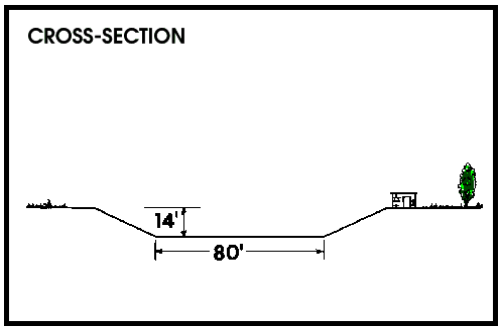


**RECORDER** - 5 min. interval data logger.

**METHOD OF MEASUREMENT** - Wading.

**DRAINAGE AREA** - 40.9 square miles.

**LOCATION** - 300 feet downstream from Lower Azusa Road, 1.5 miles north of El Monte.

**REGULATION** - Partially regulated by Sierra Madre Dam, Santa Anita Dam, Sawpit Dam, Santa Fe Dam, Peck Pit, Buena Vista Pit, and several debris basins.

**DIVERSION** - None.

**CHANNEL** - Concrete, trapizoidal section, 80.0 feet wide by 14.0 feet deep.

**CONTROL** - Channel forms control.

**LENGTH OF RECORD** - At Station F192-R, February 22, 1932 to May 7, 1958; at Station F192B-R, May 7, 1958 to date.

**REMARKS** - Subject to diversions from Monrovia, Sawpit, and Little Santa Anita Creeks. Also from the San Gabriel River below Santa Fe Dam; and form irrigation and spreading.

## RUNOFF – STREAM GAGING STATION INFORMATION

# RIO HONDO BYPASS

### Zone One Ditch

## STATION NO. F313B-R

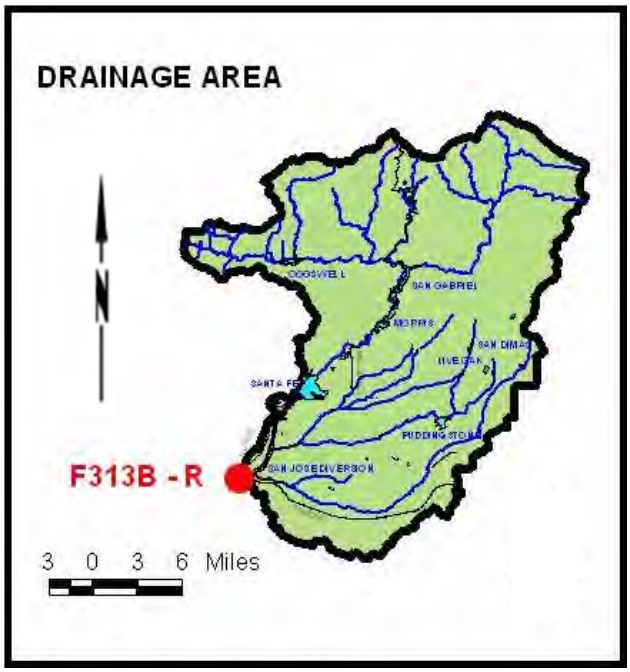


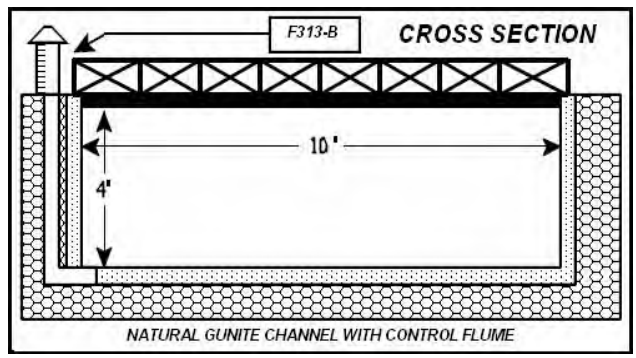


**RECORDER** - 5 min. interval data logger.

**METHOD OF MEASUREMENT** - Wading or from footbridge.

**DRAINAGE AREA** – 445.7 square miles.

**LOCATION** - On the left (south) bank of the channel 400 feet below diversion headworks.

**REGULATION** - Flow regulated at headworks installed to divert a portion of Zone I water from the San Gabriel River to Rio Hondo.

**DIVERSION** - None.

**CHANNEL** - Soil, sand, and clay.

**CONTROL** - Artificial controls below station.

**LENGTH OF RECORD** - October 1, 1953 to October 1, 1963, and from October 1, 1974 to September 30, 1982, and from October 1, 1982 to date.

**REMARKS** - Used only for Zone I purchased water diverted to Rio Hondo Spreading Grounds.

## RUNOFF – STREAM GAGING STATION INFORMATION

# RUBIO DIVERSION CHANNEL

**Below Gooseberry Inlet.**

## STATION NO. F338-R

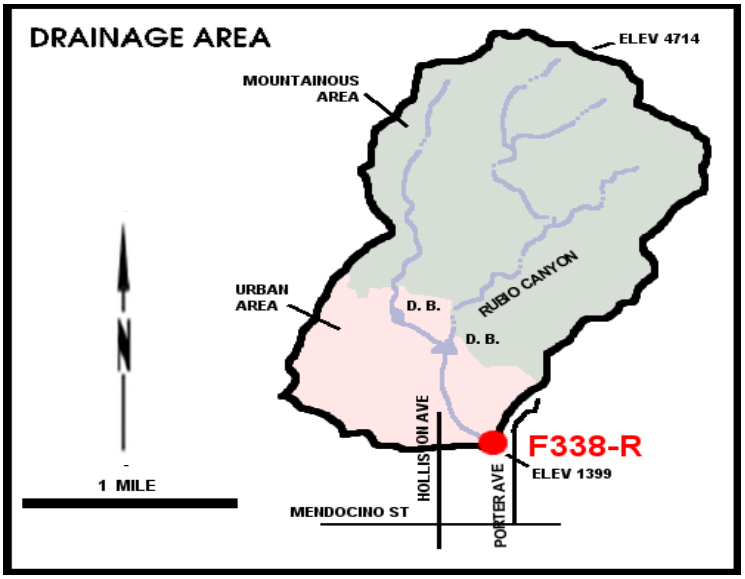


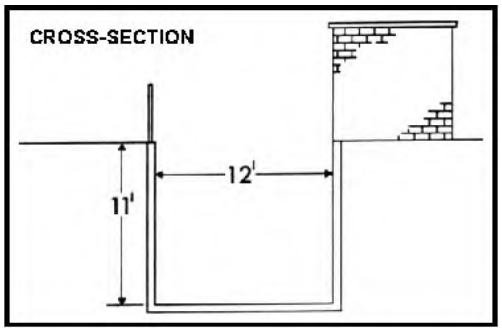


**RECORDER** - 5 min. interval data logger.

**METHOD OF MEASUREMENT** - Low flows measured by wading. High flows measured from steel footbridge 27 feet above station.

**DRAINAGE AREA** - 2.1 square miles.

**LOCATION** - On the north bank, 375 feet upstream of Crest Drive, 3.5 miles northeast of Pasadena.

**REGULATION** - Flow partially regulated by Rubio and Goosebury Debris Basins.

**DIVERSION** - None.

**CHANNEL** - Retangular concrete, 12 feet wide and 11 feet deep.

**CONTROL** - Channel forms control.

**LENGTH OF RECORD** - December 16, 1959 to date.

**REMARKS** - None.

## RUNOFF – STREAM GAGING STATION INFORMATION

# RUBIO WASH

### At Glendon Way.

## STATION NO. F82C-R

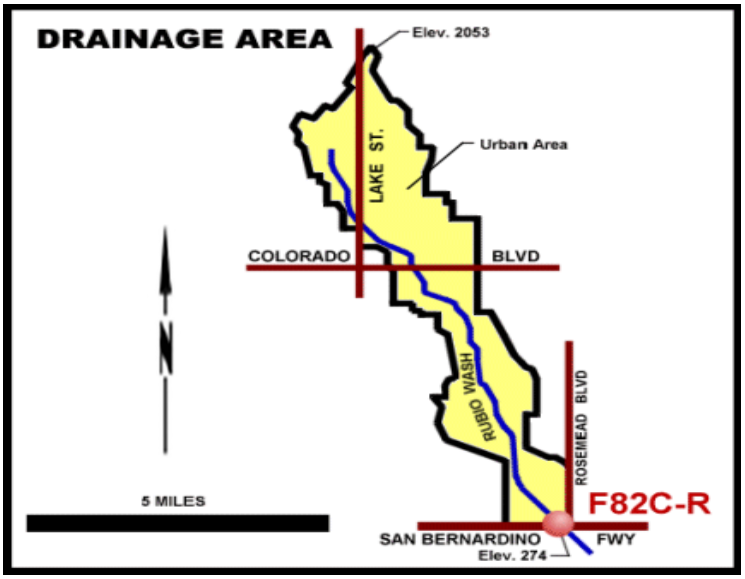


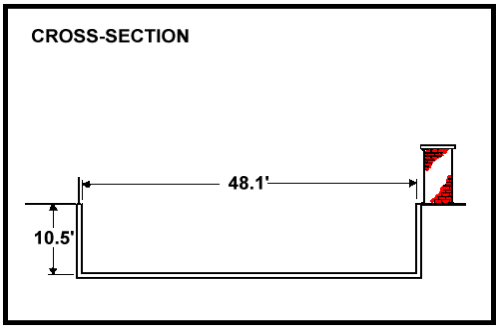


**RECORDER** - 5 min. interval data logger.

**METHOD OF MEASUREMENT** - Low flows measured by wading. High flows measured from footbridge at station.

**DRAINAGE AREA** - 10.9 square miles.

**LOCATION** - On the east side of channel, 10 feet south of the westerly extension of Glendon Way, Rosemead.

**REGULATION** - Partly regulated by Las Flores and Rubio debris basins.

**DIVERSION** - None.

**CHANNEL** - Concrete, rectangular in section.

**CONTROL** - Channel forms control.

**LENGTH OF RECORD** - At station F82-R, October 1931 to October 1934; at station F82B-R, October 1934 to October 1937; at station F82C-R, November 6, 1936 to date.

**REMARKS -** None.

## RUNOFF – STREAM GAGING STATION INFORMATION

# SAN DIMAS CREEK

**Below San Dimas Dam.**

## STATION NO. F303-R

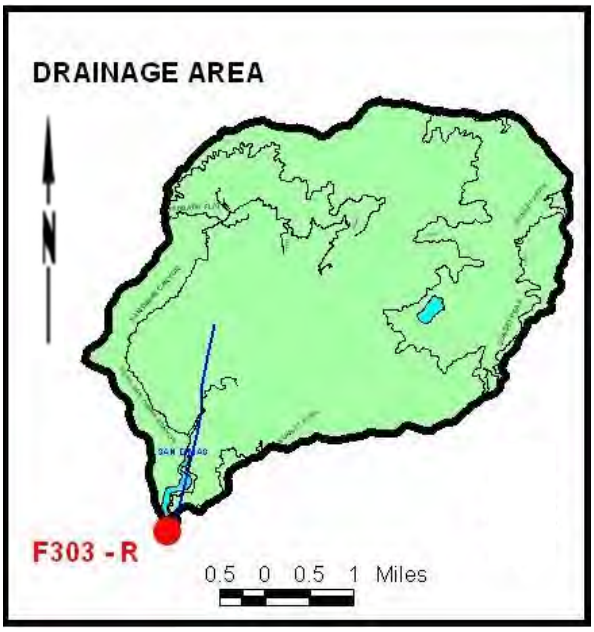


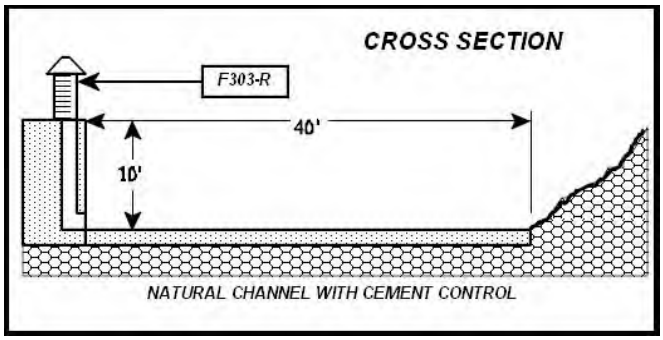


**RECORDER** - Continuous water stage.

**METHOD OF MEASUREMENT** - Wading.

**DRAINAGE AREA** - 16.2 square miles.

**LOCATION** - On the left (east) bank of San Dimas Creek, 350 feet below San Dimas Dam. Elevation of zero gage height 1325 feet.

**REGULATION** - Flow regulated by San Dimas Dam and partially by old water tunnel 150 feet above station.

**DIVERSION** - None.

**CHANNEL** - Natural channel.

**CONTROL** - A concrete control installed below station to keep low flow at left bank.

**LENGTH OF RECORD** - December 24, 1951 to date.

**REMARKS** - Located, constructed and operated by the Los Angeles County Flood Control District.

## RUNOFF – STREAM GAGING STATION INFORMATION

# SAN DIMAS WASH

**Below Puddingstone Diversion.**

## STATION NO. F218-R

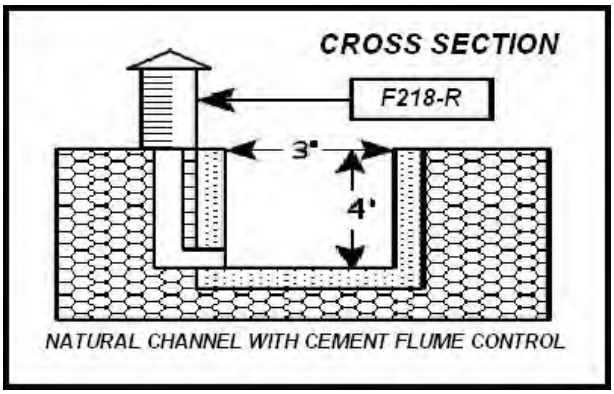


**RECORDER** - Continuous water stage.

**METHOD OF MEASUREMENT** - Wading.

**DRAINAGE AREA** - 19.9 square miles.

**LOCATION** - On San Dimas type flume about 75 feet west of the southerly end of Puddingstone Diversion Dam about 3 miles northwest of La Verne. Elevation of zero gage height 1126.86 feet

**REGULATION** - Flow entirely regulated by Puddingstone Diversion Dam, spillway discharge enters wash below the station, inflow into Puddingstone Diversion Dam is regulated by San Dimas Dam.

**DIVERSION** - San Dimas Water Company diverts water below San Dimas Dam for irrigation.

**CHANNEL** - Sand and gravel.

**CONTROL** - 3ft X 3ft San Dimas Type Flume control.

**LENGTH OF RECORD** - October 1, 1945 to date

**REMARKS -** None..

## RUNOFF – STREAM GAGING STATION INFORMATION

# SAN GABRIEL - AZUSA CONDUIT

**(Sandbox 20ft weir)**

## STATION NO. F250-R

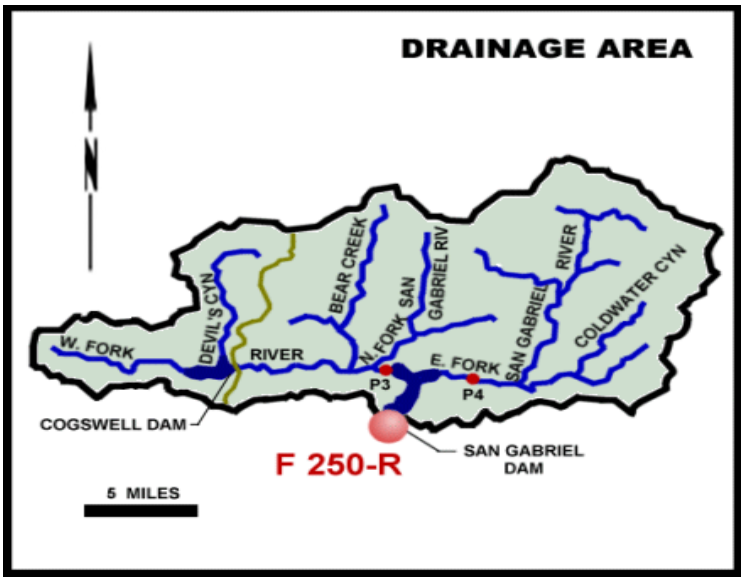


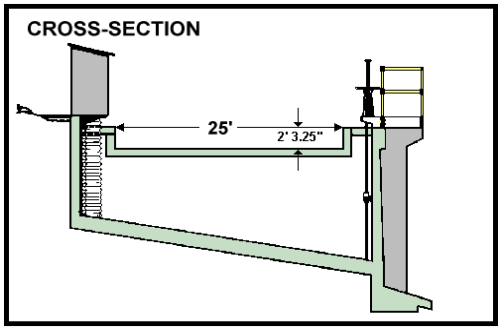


**RECORDER** - 5 min. interval data logger.

**METHOD OF MEASUREMENT** - Weir formula with gage height observation.

**DRAINAGE AREA** - 202.7 square miles.

**LOCATION** - On the concrete conduit which diverts from San Gabriel Dam, 160 feet below the dam.

**REGULATION** - Regulated in section.

**DIVERSION** - None.

**CHANNEL** - 25 foot concrete weir.

**CONTROL** - Channel forms control.

**LENGTH OF RECORD** - February 26, 1933 to date.

**REMARKS** - Approximate capacity 95 second-feet.

## RUNOFF – STREAM GAGING STATION INFORMATION

# SAN GABRIEL - AZUSA CONDUIT

**(Sandbox 10ft weir)**

## STATION NO. F220B-R

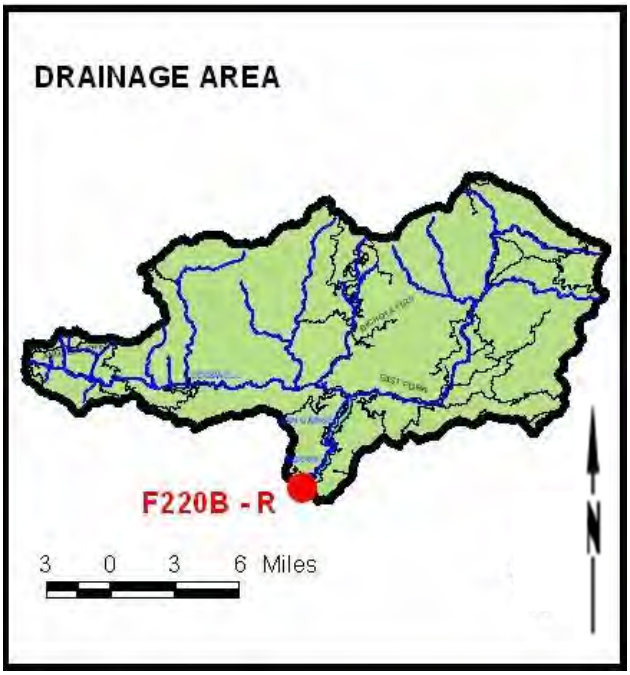


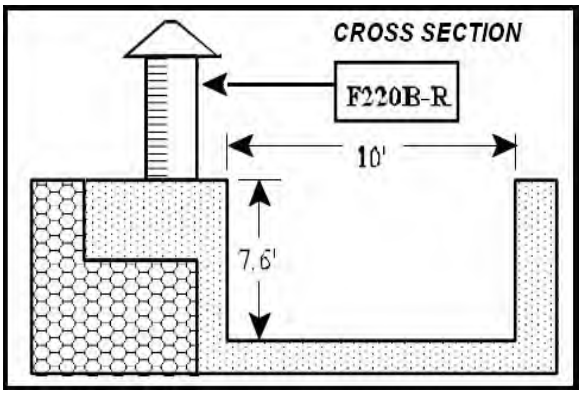


**RECORDER** - Continuous water stage.

**METHOD OF MEASUREMENT** – Weir formula with gage height observation.

**DRAINAGE AREA** - None.

**LOCATION** - On the concrete conduit which diverts from San Gabriel Dam, 160 feet below the dam.

**REGULATION** - Flow regulated by San Gabriel Dam.

**CHANNEL** – Concrete, rectangular in section, 10.0 feet wide by 7.6 feet deep

**CONTROL** – 10 feet concrete weir.

**LENGTH OF RECORD** – February 26, 1933 to date.

**REMARKS -** Approximate capacity 95 second/feet.

## RUNOFF – STREAM GAGING STATION INFORMATION

# SAN GABRIEL RIVER

**Above Firestone Avenue.**

## STATION NO. F262C-R

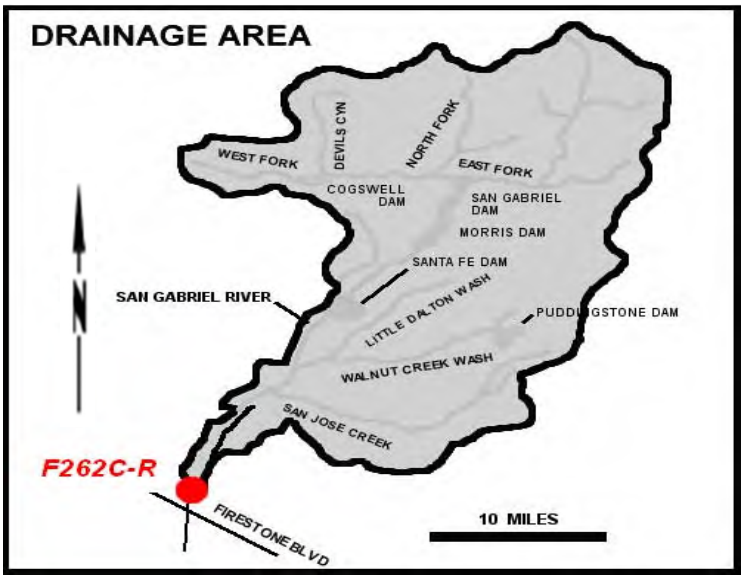


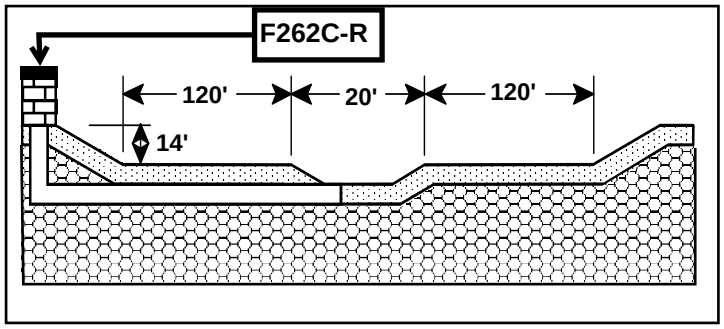


**RECORDER** - Continuous water stage.

**METHOD OF MEASUREMENT** - Float and tape recorder.

**DRAINAGE AREA** - 215.8 square miles.

**LOCATION** - 1,400 feet above Firestone Avenue, 2.0 miles east of Downey.

**REGULATION** - Partially regulated by Cogswell, San Gabriel, Morris, Santa Fe, Big Dalton, San Dimas, Puddingstone Diversion, Puddingstone, Live Oak, Thompson Creek, and Whittier Narrows Dams, Several debris basin, MWD outlets, and several spreading grounds.

**DIVERSION** - None.

**CHANNEL -** Trapezoidal concrete channel with trapezoidal low flow.

**CONTROL** - Concrete stabilizer.

**LENGTH OF RECORD** - At Station F267-R, February 27, 1937 to September 30, 1967; at Station F262B-R, August 6, 1968 to September 30, 1990; at Station F262C-R, Octorber 1, 1990 to date.

**REMARKS** - No recording during 1967-1968 season due to channel construction.

## RUNOFF – STREAM GAGING STATION INFORMATION

# SAN GABRIEL RIVER

### Above Spring Street.

## STATION NO. F42B-R

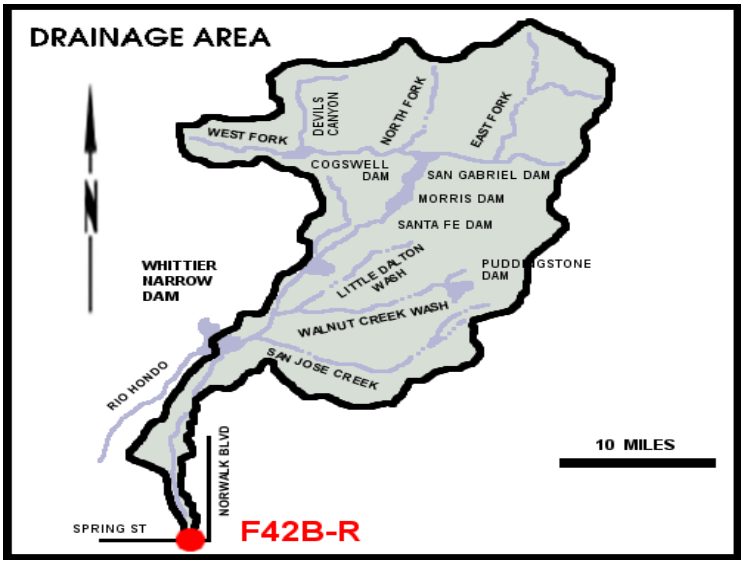


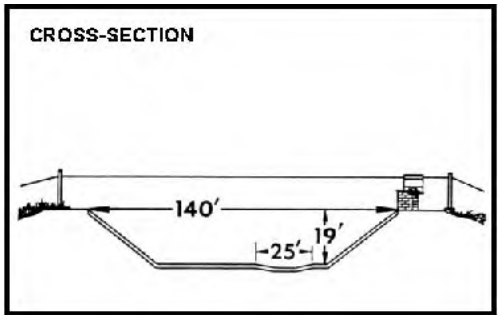


**RECORDER** - Continuous water stage.

**METHOD OF MEASUREMENT** - Wading.

**DRAINAGE AREA** - 231.0 square miles.

**LOCATION** - 455.0 feet north of Spring Street, 4.0 miles east of Signal Hill, Long Beach.

**REGULATION** - Partially regulated by Cogswell, San Gabriel, Morris, Santa Fe, Big Dalton, San Dimas, Puddingstone Diversion, Puddingstone, Live Oak, Thompson Creek, and Whittier Narrows Dams, Several debris basins, MWD outlet, and several spreading grounds.

**DIVERSION** - None.

**CHANNEL** - Concrete, trapezoidal section with low flow channel.

**CONTROL** - Channel forms control.

**LENGTH OF RECORD** - At Station F42-R, February 6, 1928 to May 26, 1964; at Station F42B-R, November 16, 1964 to date.

**REMARKS** - High flows into Whittier Narrows Reservoir are partialy diverted to the Rio Hondo.

## RUNOFF – STREAM GAGING STATION INFORMATION

# SAN GABRIEL RIVER

### Below San Gabriel River Pkwy.

## STATION NO. F263C-R

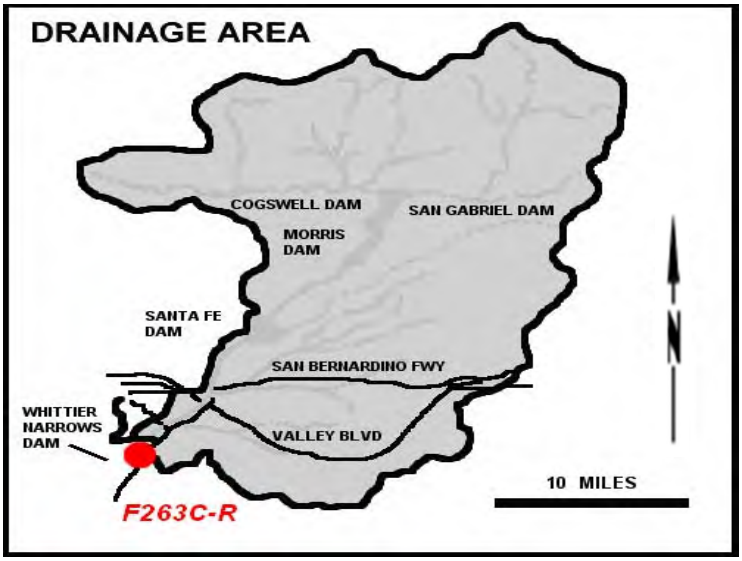


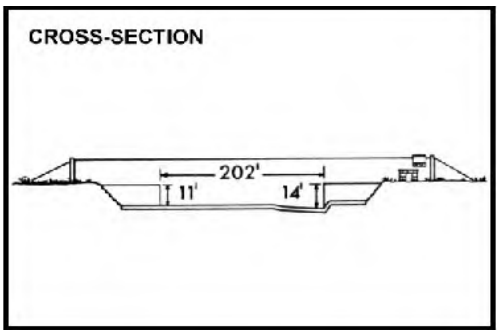


**RECORDER** - Continuous water stage.

**METHOD OF MEASUREMENT** - Wading.

**DRAINAGE AREA** - 450 square miles.

**LOCATION** - 462.0 feet below San Gabriel River Parkway, 1.4 miles northeast of Pico Rivera.

**REGULATION** - Partially regulated by Cogswell, San Gabriel, Morris, Santa Fe, Whittier Narrows, Big Dalton, Puddingstone Diversion, Puddingstone, and Thompson Creek Dams. Flows may include imported water from several Metropolitan Water District outlets. Water is at times diveted to the Zone One Ditch, upstream of Whittier Narrows Dam.

**DIVERSION** - None.

**CHANNEL** - Rip-rap slopes with sand bottom trapezoidal section.

**CONTROL** - Concrete stabilizer.

**LENGTH OF RECORD** - At Station F263-R, February 4, 1937 to March 6, 1952; at Station F263B-R, March 6, 1952 to August 9, 1968; at Station F263C-R, August 9, 1968 to date.

**REMARKS** - None.

Drainage Area as of July 2017. This supercedes previous reports.

## RUNOFF – STREAM GAGING STATION INFORMATION

# SAN GABRIEL RIVER

### At Foothill Blvd.

## STATION NO. F190-R

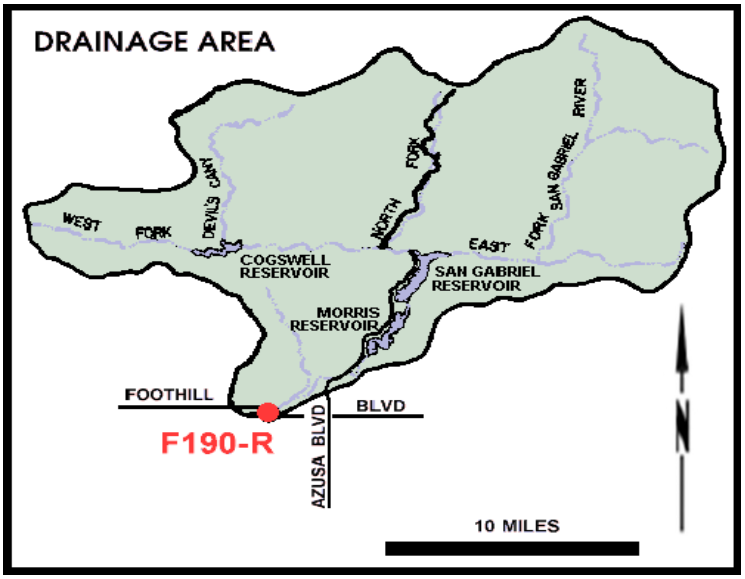


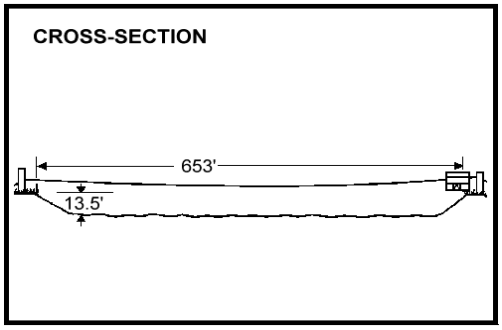


**RECORDER** - 5 min. interval data logger.

**METHOD OF MEASUREMENT** - Wading.

**DRAINAGE AREA** - 230.0 square miles.

**LOCATION** - Downstream side of Foothill Boulevard bridge, 2.0 miles west of Azusa.

**REGULATION** - Partially regulated by Cogswell, San Gabriel, and Morris Dams.

**DIVERSION** - None.

**CHANNEL** - Sand, gravel and rock, trapezoidal section with soft bottom.

**CONTROL** - Gunited rock stabilizers.

**LENGTH OF RECORD** - February 22, 1932 to date.

**REMARKS** - Flows may include imported originating at the Metropolitan Water District outlet below Morris Dam.

## RUNOFF – STREAM GAGING STATION INFORMATION

# SAN GABRIEL RIVER

### Below Santa Fe Dam.

## STATION NO. E281-R

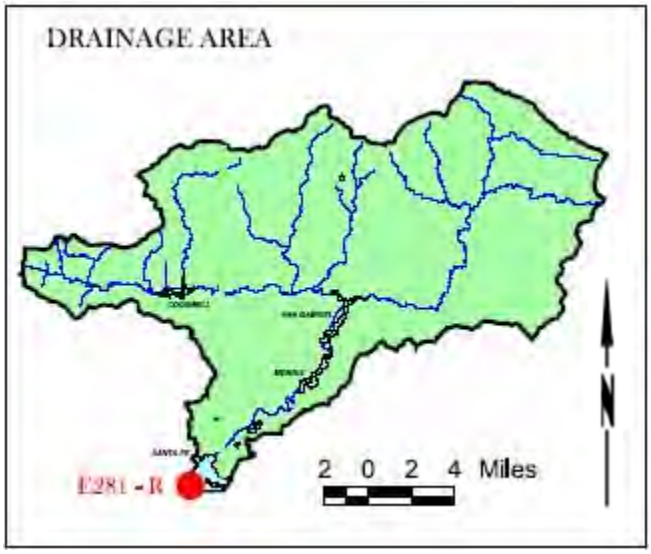


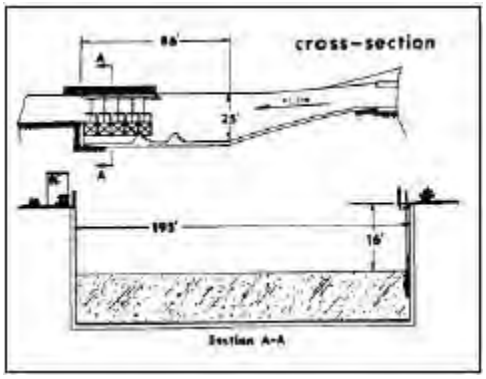


**RECORDER** - Continuous water stage.

**METHOD OF MEASUREMENT** - Wading.

**DRAINAGE AREA** 236.0 Square miles (Revised)

**LOCATION** – 1.7 north of Baldwin Park. Elevation of gage about 400 feet.

**REGULATION** - Flow regulated by Santa Fe Dam.

**DIVERSION** - There are diversions for irrigation, power development and spreading, discharges over the spillway of Dam flow to the Rio Hondo and are not recorded at this station, five gated openings on the west side of the stilling basin may divert flow to a diversion canal to the Rio Hondo. Such diversions are measured at station F280-R, Santa Fe Channel.

**CHANNEL** - A stilling basin located in the outlet channel immediately below Santa Fe Dam.

**CONTROL** - 194.84 foot concrete overflow section to the San Gabriel River and 5 gated openings to the Rio Hondo Diversion Channel.

**LENGTH OF RECORD** – February 9, 1943 to date.

**REMARKS** – Station operated by USGS. Outflow from Santa Fe Dam may be diverted through Santa Fe Diversion Channel. Refer to Station F280-R.

## RUNOFF – STREAM GAGING STATION INFORMATION

# SAN GABRIEL RIVER

### Below Cogswell Dam.

## STATION NO. F209-R

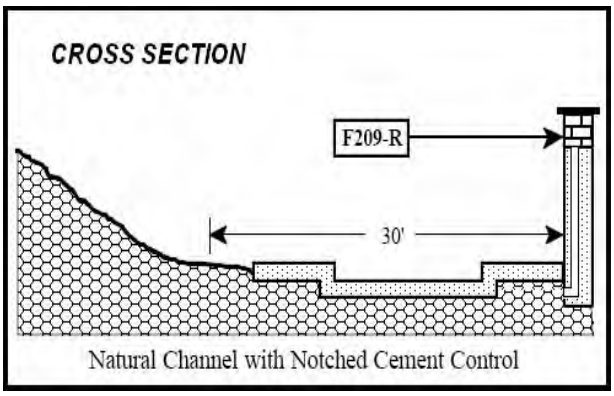


**RECORDER** - Continuous water stage.

**METHOD OF MEASUREMENT** - Wading.

**DRAINAGE AREA** - 41.0 square miles.

**LOCATION** - On the left (northeast) bank of the west fork of the San Gabriel River about 7 miles above junction of the east and west forks and 0.5 mile downstream from Cogswell Dam. Elevation of zero gage height 2083.37 feet.

**REGULATION** - 40.4 square miles regulated by Cogswell Dam, 0.6 square mile unregulated.

**DIVERSION** - None.

**CHANNEL** – Sand, Gravel, and boulders.

**CONTROL** - Concrete control with low flow notch about 35 feet below the station.

**LENGTH OF RECORD -** October 1, 1933 to October 1, 1967, and from October 1, 1988 to date.

**REMARKS** - None.

## RUNOFF – STREAM GAGING STATION INFORMATION

# SAN GABRIEL RIVER

### Above Whittier Narrow Dam.

## STATION NO. G44B-R

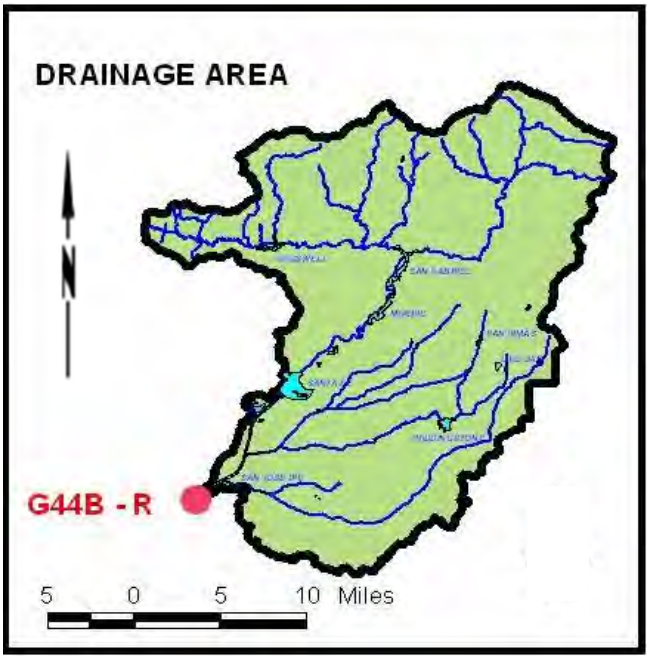


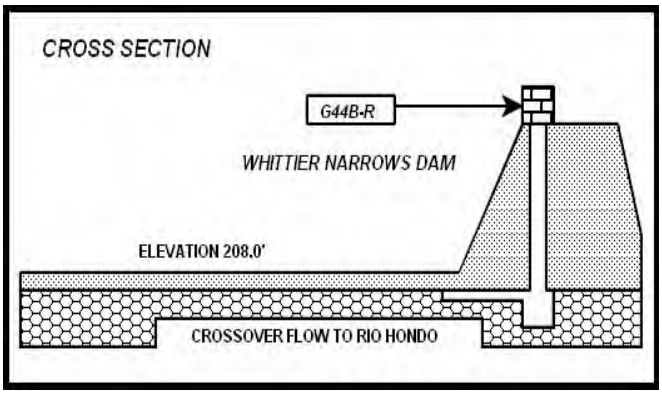


**RECORDER** - Continuous water stage.

**METHOD OF MEASUREMENT** - Stream gaging.

**DRAINAGE AREA** - 442 square miles.

**LOCATION** - On top of Whittier Narrows Dam, San Gabriel side, adjacent to radial gates.

**REGULATION** - Flows regulated by several reservoirs including Cogswell, San Gabriel, Morris, and Santa Fe Dams.

**DIVERSION** - Surface flows controlled by Whittier Narrows Dams radial gates; San Gabriel side to Rio Hondo side.

**CHANNEL** - Natural, rock and gravel.

**CONTROL** - Concrete and radial gates.

**LENGTH OF RECORD** - October 1, 1991 to date.

**REMARKS** - None.

## RUNOFF – STREAM GAGING STATION INFORMATION

# SAN GABRIEL RIVER

**Below Morris Dam.**

## STATION NO. U8-R

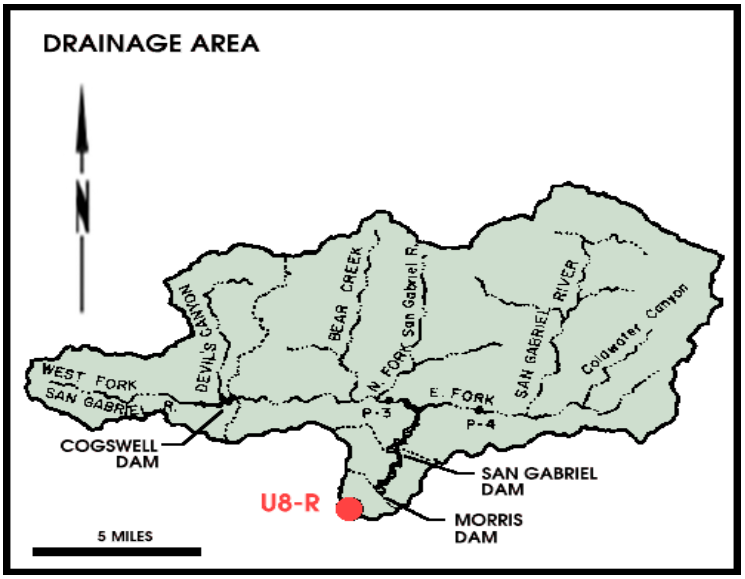


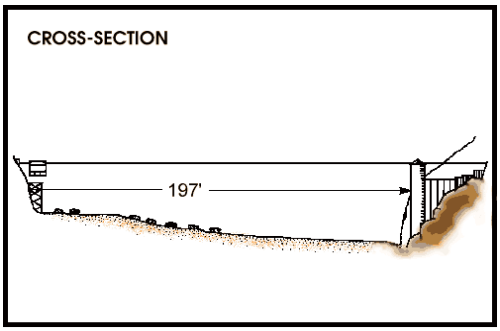


**RECORDER** - 5 min. interval data logger.

**METHOD OF MEASUREMENT** - Wading.

**DRAINAGE AREA** - 212.4 square miles.

**LOCATION** - 1.1 miles downstream of Morris Dam, 27 miles northeast of Azusa.

**REGULATION** - All flows regulated by Cogswell Dam, 27 miles northeast of Azusa.

**DIVERSION** - None.

**CHANNEL** - Gravel and boulder, natural section.

**CONTROL** - Concrete control.

**LENGTH OF RECORD** - May 1894 to date.

**REMARKS** - Flows up to 90 cfs are at times diverted past the station through the Azusa Conduit, flows at station may include imported water from the MWD outlet below Morris Dam.

## RUNOFF – STREAM GAGING STATION INFORMATION

# San Gabriel River West Fork

### At toe of Cogswell Dam.

## STATION NO. F251-R

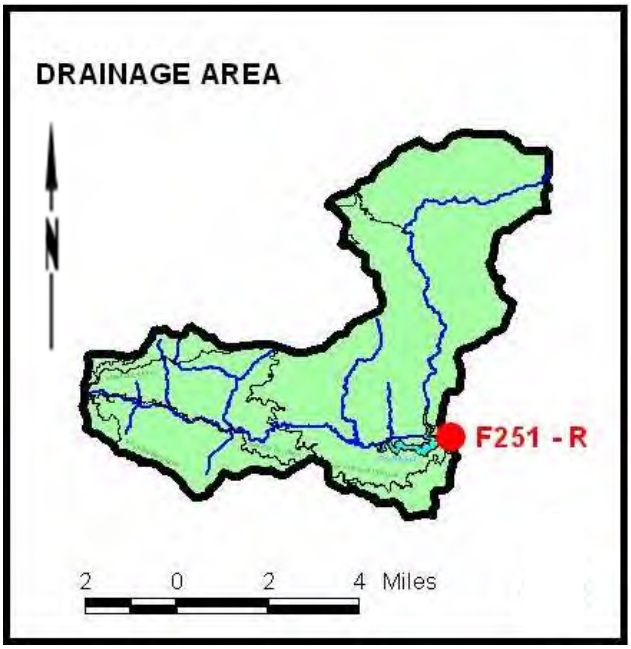


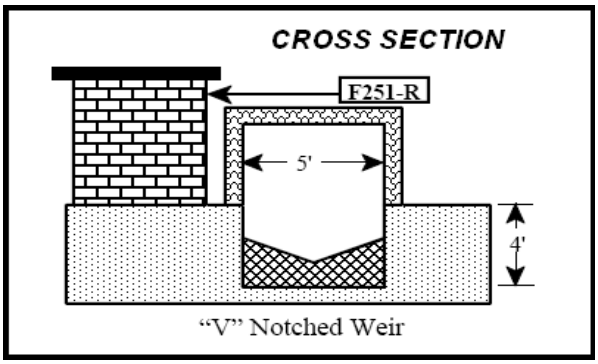


**RECORDER** - Continuous water stage.

**METHOD OF MEASUREMENT** - Wading.

**DRAINAGE AREA** - 39.2 square miles.

**LOCATION** - About 200 feet below San Gabriel Dam No 2, and about 7 miles above the junction of the east and west Forks of the San Gabriel River.

**REGULATION** - Except for the bank runoff from a very small area below the dam, the flow is entirely regulated by San Gabriel Dam No 2.

**DIVERSION** - Water released from San Gabriel Dam No 2 enters river below station F251-R.

**CHANNEL** - Sand and gravel, natural section.

**CONTROL** - "V" notched weir.

**LENGTH OF RECORD** - Recorder records from April 26, 1935 to September 30, 1936 and from October 1974 to date.

**REMARKS** - None.

## RUNOFF – STREAM GAGING STATION INFORMATION

# SAN JOSE CHANNEL

**Above Workman Mill Road.**

## STATION NO. F312B-R

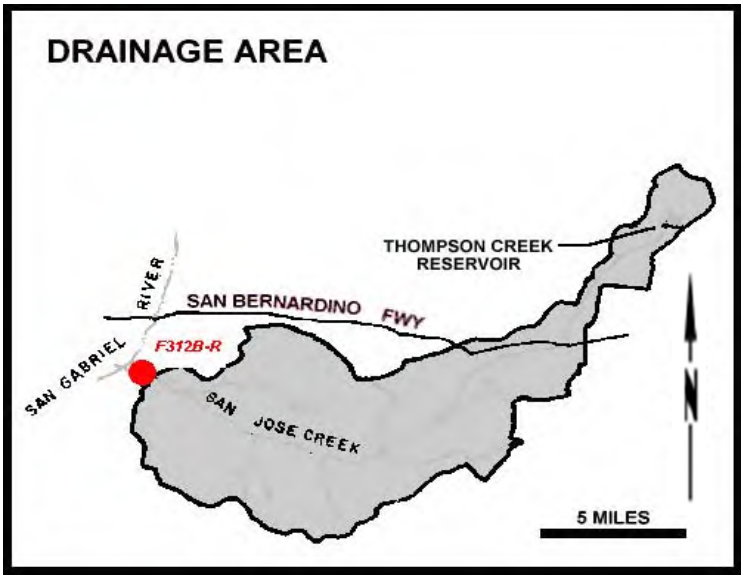


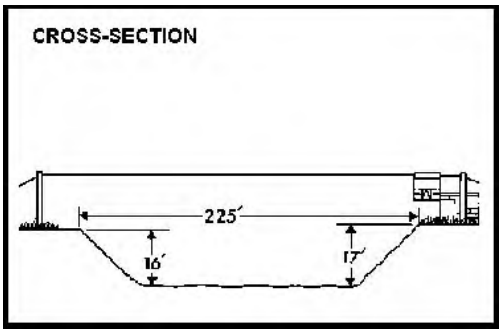


**RECORDER** - 5 min. interval data logger.

**METHOD OF MEASUREMENT** - Wading.

**DRAINAGE AREA** - 83.4 square miles.

**LOCATION** - 1,650 feet above Workman Mill Road, 3.0 miles southeast of El Monte.

**REGULATION** - Partially regulated by Thompson Creek Dam and Pomona Sewage Treatment Plant.

**DIVERSION** - None.

**CHANNEL** - Grouted rip-rap side slopes with natural bottom, trapezoidal section.

**CONTROL** - Rock stabilizer.

**LENGTH OF RECORD** - September 13, 1955 to date.

**REMARKS -** None.

## RUNOFF – STREAM GAGING STATION INFORMATION

# SANTA ANITA WASH

### Below Foothill Blvd.

## STATION NO. F260C-R

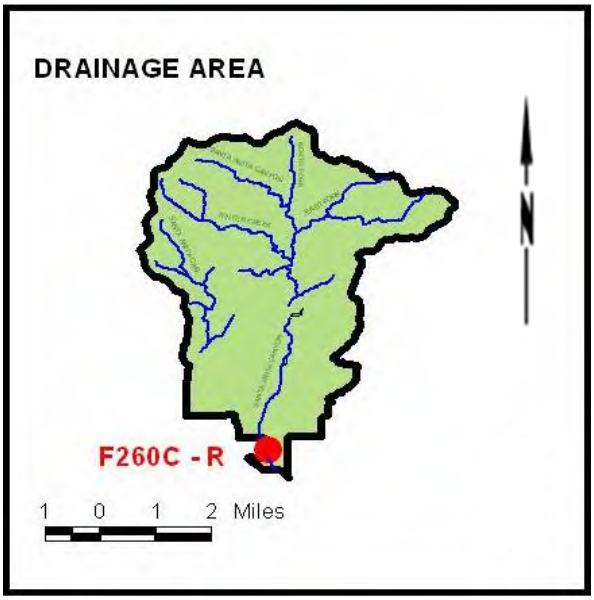


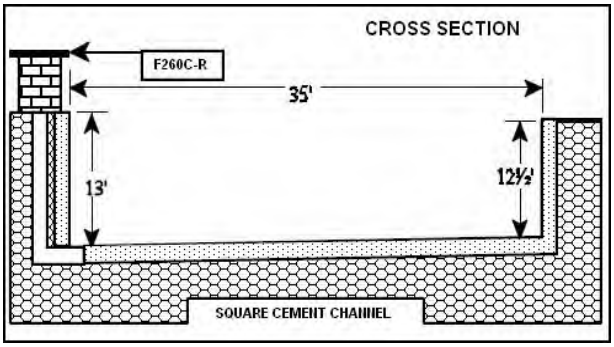


**RECORDER** - 5 min. interval data logger.

**METHOD OF MEASUREMENT** - Wading.

**DRAINAGE AREA** 17.2 square miles.

**LOCATION** - Approximately 1/4 mile downstream from Foothill Blvd. in Arcadia. Located on the right bank of the Santa Anita Wash.

**REGULATION** - Flow partially regulated by Big Santa Anita Dam and Sierra Madre Dam.

**DIVERSION** - About 2 second feet diverted for irrigation at mouth of Santa Anita Canyon. The city of Sierra Madre diverts water from Sierra Madre Wash and Santa Anita Creek for spreading in Sierra Madre Spreading Grounds. The Flood Control District diverts water from Santa Anita Creek for spreading at mouth of Santa Anita Canyon.

**CHANNEL** - Concrete, rectangular section.

**CONTROL** - Channel forms control.

**LENGTH OF RECORD** - October 1, 1935 to October 1, 1938, and from October 1, 1957 to October 1, 1967, and from October 1, 1974 to date.

**REMARKS** - None.

## RUNOFF – STREAM GAGING STATION INFORMATION

# SANTA ANITA WASH

### At Longden Avenue.

## STATION NO. F193B-R

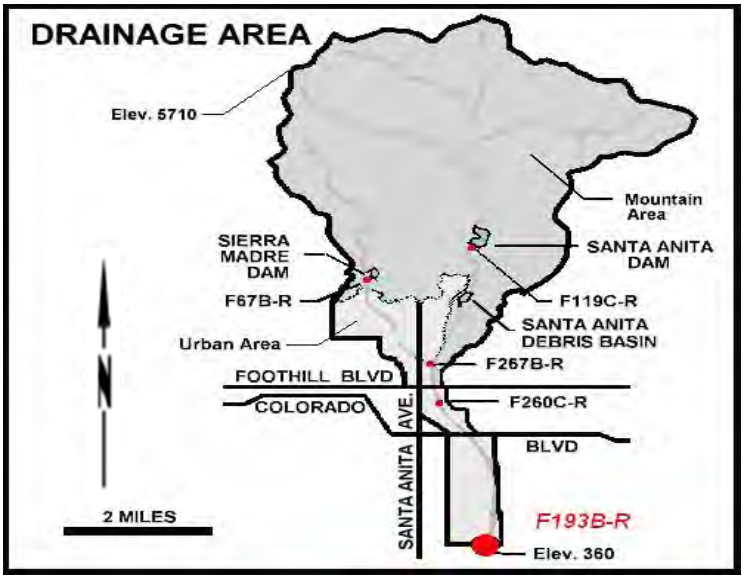


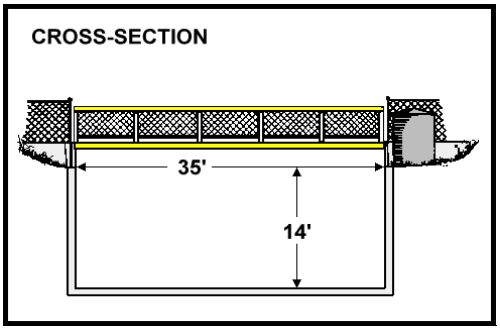


**RECORDER** - 5 min. interval data logger.

**METHOD OF MEASUREMENT** - Wading or from bridge.

**DRAINAGE AREA** - 18.8 square miles.

**LOCATION** - 30.0 feet above Longden Avenue, 1.5 miles south of Arcadia.

**REGULATION** - Regulated by Santa Anita and Sierra Madre Dams, and Santa Anita Debris Basin.

**DIVERSION** - None.

**CHANNEL** - Concrete, rectangular section, 35.0 feet wide by 14.0 feet deep.

**CONTROL** - Channel forms control.

**LENGTH OF RECORD** - At Station F193-R, April 25, 1932 to March 1, 1938; at Station F193B-R, January 5, 1960 to date.

**REMARKS -** None.

## RUNOFF – STREAM GAGING STATION INFORMATION

# SANTA CLARA RIVER

**At Old Road Bridge.**

## STATION NO. F92C-R

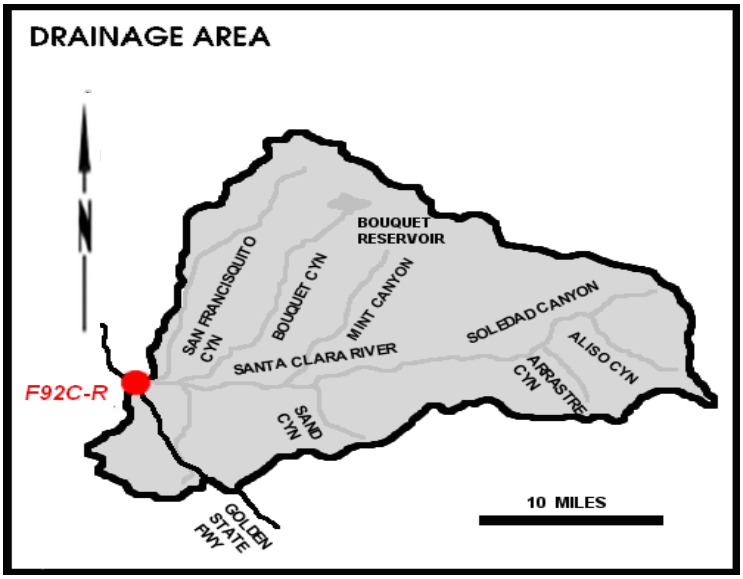


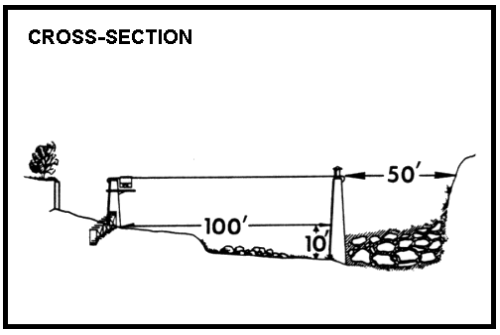


**RECORDER** - Continuous water stage.

**METHOD OF MEASUREMENT** - Stream Gaging or from bridge.

**DRAINAGE AREA** - 410.4 square miles.

**LOCATION** - Downstream side of Old Road bridge, 3 miles west of Saugus.

**REGULATION** - Partially regulated by Bouquet Canyon and Dry Canyon Reservoirs.

**DIVERSION** - None.

**CHANNEL** - Sand and gravel with brush, natural section.

**CONTROL** - None.

**LENGTH OF RECORD** - At station F92-R, January 18, 1930 to March 28, 1938 and September 24, 1956 to September 30, 1988; at station F92B-R, October 1, 1938 to September 24, 1956; at station F92C-R, October 1, 1988 to date.

**REMARKS** - Subject to diversions for irrigation. Station destroyed by flood of February 25, 1969 and then re-established.

## RUNOFF – STREAM GAGING STATION INFORMATION

# SANTA CLARA RIVER

### At Capra Road Railroad Crossing.

## STATION NO. F93C-R

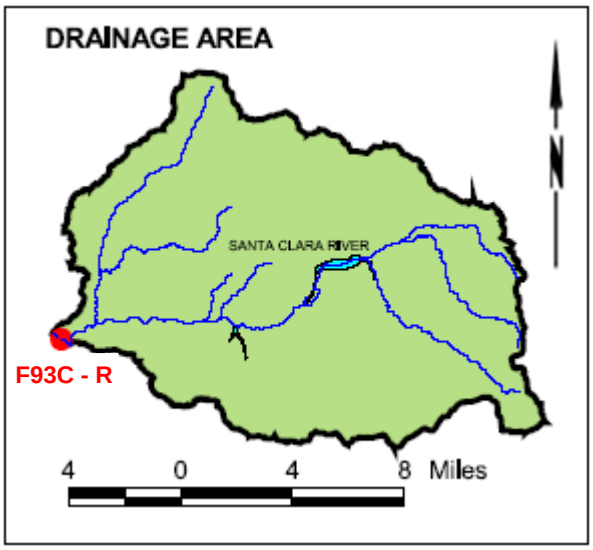


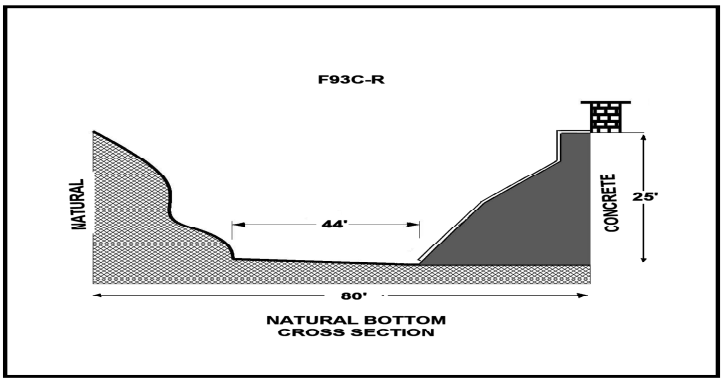


**RECORDER** - 5 min. interval data logger.

**METHOD OF MEASUREMENT** - Wading.

**DRAINAGE AREA** - 157.0 square miles.

**LOCATION** - On right bank, 0.2 mi from railroad bridge, 1.8 mi downstream from Agua Dulce Canyon, and 1.0 mi southeast of Lang.

**REGULATION** - None.

**DIVERSION** - Small diversions for irrigation and recreation above station.

**CHANNEL** - Sand, gravel, and rock, natural section.

**CONTROL** - None.

**LENGTH OF RECORD** - At station F93-R, November 15, 1952 to October 1, 1968; at station F93B-R, October 1, 1969 to October 1, 1974; and February 2002 to date.

**REMARKS -** None.

## RUNOFF – STREAM GAGING STATION INFORMATION

# SANTA FE DIVERSION CHANNEL

**Below Santa Fe Dam.**

## STATION NO. F280-R

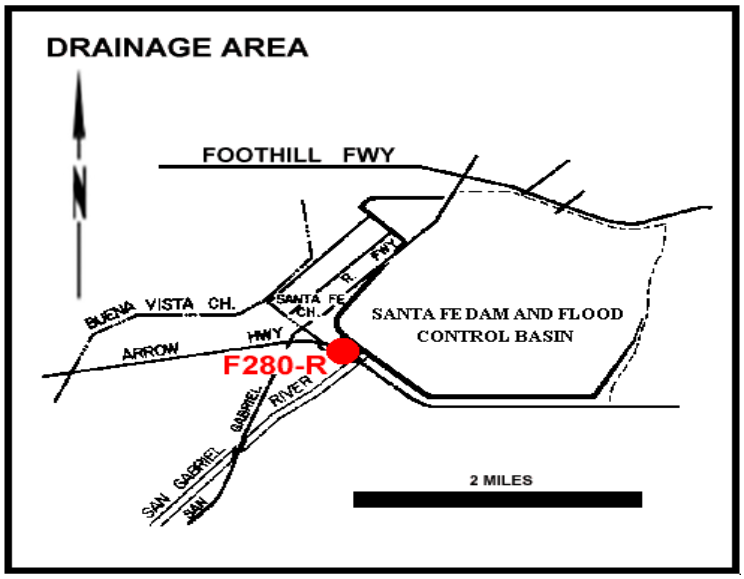


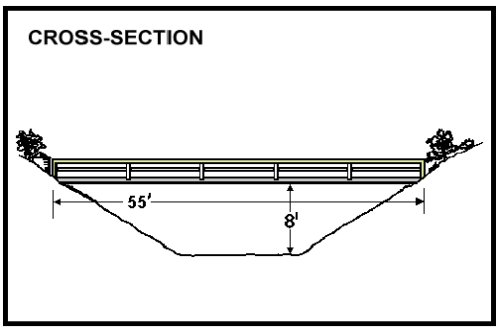


**RECORDER** - 5 min. interval data logger.

**METHOD OF MEASUREMENT** - Wading or from footbridge.

**DRAINAGE AREA** - Controlled square miles.

**LOCATION** - 400.0 feet downstream of Santa Fe Dam outlet and 1.5 miles north of Baldwin Park.

**REGULATION** - Flow regulated by five gates of stilling basin outlet of Santa Fe Dam.

**DIVERSION** - None.

**CHANNEL** - Sand and gravel, natural section.

**CONTROL** - Concrete stabilizer.

**LENGTH OF RECORD** - At Station F280-S, October 1, 1942 to May 12, 1944; at Station F280-R, May 12, 1944 to date.

**REMARKS -** None..

## RUNOFF – STREAM GAGING STATION INFORMATION

# SANTIAGO CANYON CREEK

**Above Little Rock Creek.**

## STATION NO. F125-R

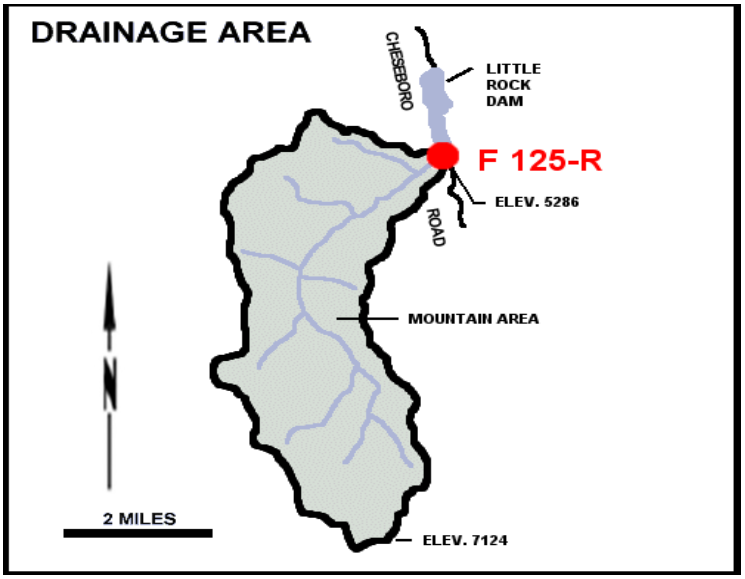


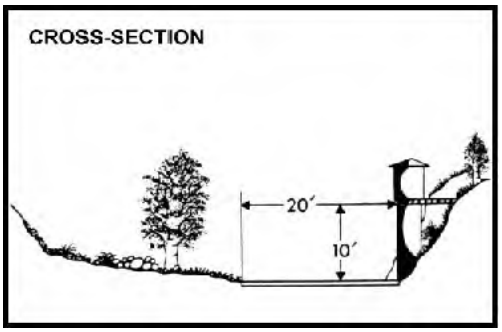


**RECORDER** - Continuous water stage.
**METHOD OF MEASUREMENT** - Wading.
**DRAINAGE AREA** - 11.2 square miles.
**LOCATION** - 1,000 feet above Little Creek and 4.5 miles south of Little Rock.
**REGULATION** - None.
**DIVERSION** - None.
**CHANNEL** - Sand, gravel and boulders.
**CONTROL** - Concrete and rubble wall.
**LENGTH OF RECORD** - September 29, 1953 to date.
**REMARKS** - No high flow measurements.

## RUNOFF – STREAM GAGING STATION INFORMATION

# SAWPIT CREEK

**Below Sawpit Dam.**

## STATION NO. F278-R

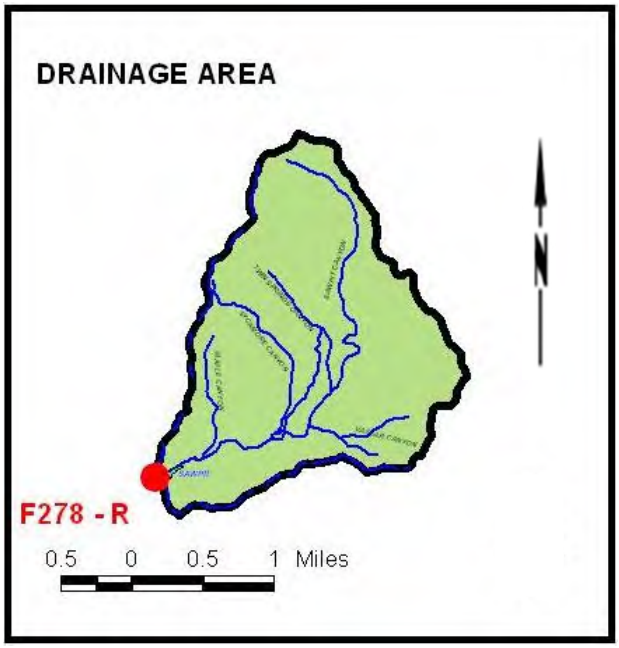


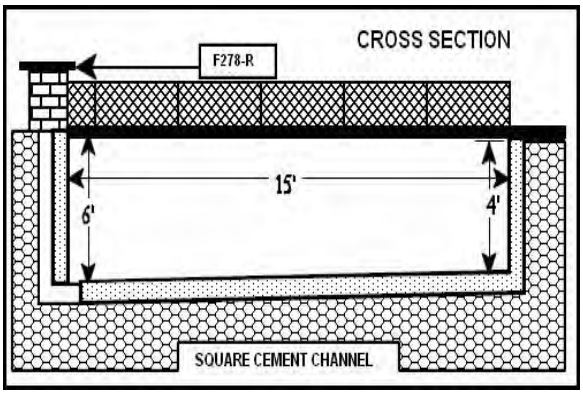


**RECORDER** - Continuous water stage.

**METHOD OF MEASUREMENT** - Wading or from footbridge.

**DRAINAGE AREA** 3.3 square miles.

**LOCATION** - On the right (north) side of the stream, about 500 feet downstream from Sawpit Dam and about 2.5 miles north of Monrovia. Elevation of gage 1199.27 feet.

**REGULATION** - Flow regulated by Sawpit Dam, station F278-R measures outlet discharge, spillway discharge enters Sawpit Creek below the station.

**DIVERSION** - City of Monrovia diverts flow above Sawpit Dam.

**CHANNEL** - Sand and gravel.

**CONTROL** - A broad-crested weir forms the control.

**LENGTH OF RECORD** - October 1, 1941 to date.

**REMARKS** - None.

## RUNOFF – STREAM GAGING STATION INFORMATION

# SAWPIT WASH

### Below Live Oak Avenue.

## STATION NO. F194B-R

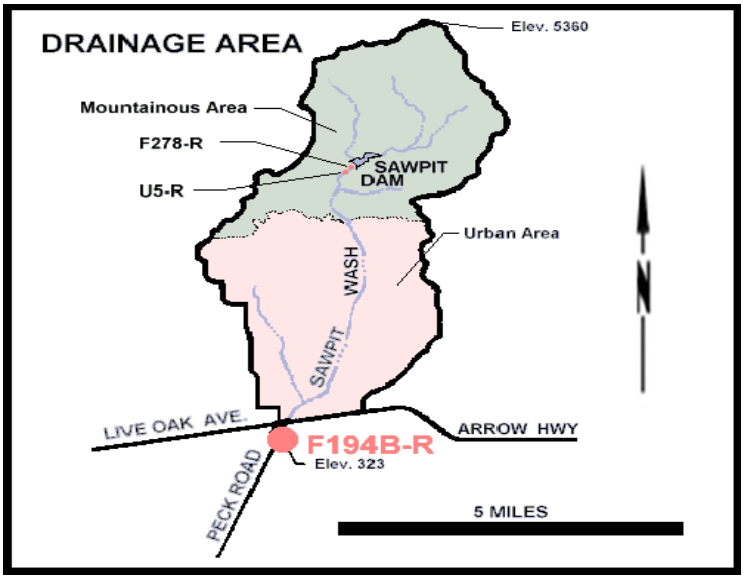


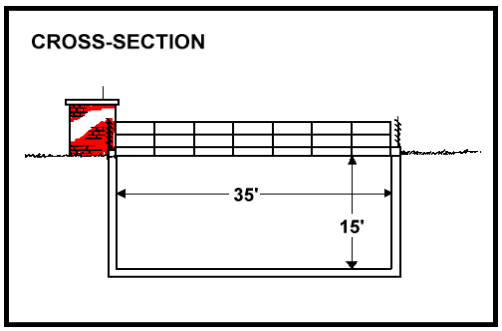


**RECORDER** - 5 min. interval data logger.

**METHOD OF MEASUREMENT** - Wading from footbridge.

**DRAINAGE AREA** - 16.1 square miles.

**LOCATION** - 1,500 feet below Live Oak Ave, 3.0 miles south of Monrovia.

**REGULATION** - Partially regulated by Sawpit and Santa Fe Dams, and several debris basins.

**DIVERSION** - None.

**CHANNEL** - Concrete, rectangular section, 35.0 feet wide by 15.0 feet deep.

**CONTROL** - Channel forms control.

**LENGTH OF RECORD** - At Station F194-R, February 22, 1932 to September 1, 1935; at Station F194B-R, December 5, 1960 to date.

**REMARKS** - None.

## RUNOFF – STREAM GAGING STATION INFORMATION

# THOMPSON CREEK

**Below Thompson Creek Dam.**

## STATION NO. F32B-R

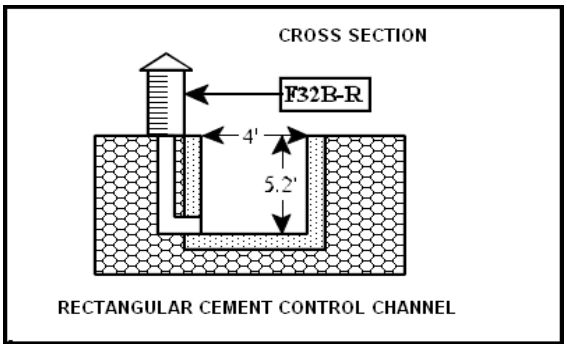


**RECORDER** - Continuous water stage.

**METHOD OF MEASUREMENT** - Wading.

**DRAINAGE AREA** 3.7 square miles.

**LOCATION** - On the left (east) bank about 300 feet below Thompson Creek Dam tunnel outlet and about 2.5 miles north of Claremont. Elevation of zero gage height 1579.94 feet.

**REGULATION** - Inflow to Thompson Creek Dam from Cobal and Palmer Canyons can be directed through a 3-ft X 3-ft outlet tunnel to Thompson Creek Spreading Grounds.

**DIVERSION** - Flow through the diversion tunnel can be controlled by two slide gates so that any flow in excess of the capacity of gate openings is passed over a spillway back to the reservoir, flow through the 24 inch outlet valve passes the station, discharged over the spillway of the dam would not be recorded at this station.

**CHANNEL** - Natural channel.

**CONTROL** - San Dimas type flume.

**LENGTH OF RECORD** - October 1, 1945 to date.

**REMARKS -** None.

## RUNOFF – STREAM GAGING STATION INFORMATION

# TOPANGA CREEK

**Above mouth of canyon.**

## STATION NO. F54C-R

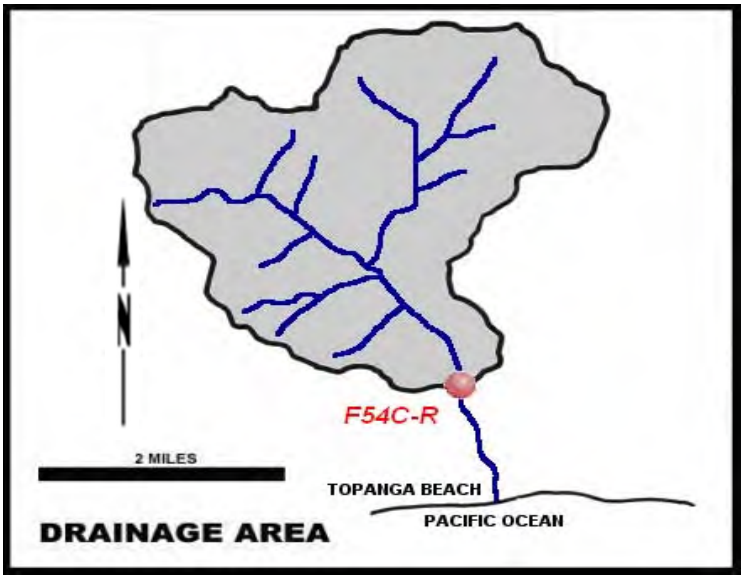


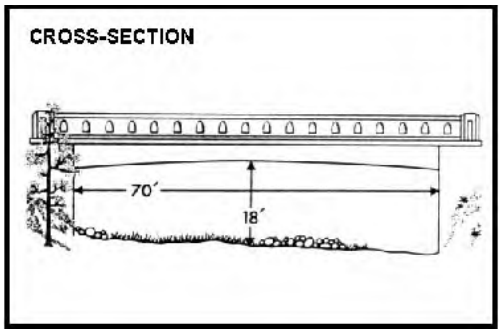


**RECORDER** - Continuous water stage.

**METHOD OF MEASUREMENT** - Wading.

**DRAINAGE AREA** - 18.0 square miles.

**LOCATION** - Downstream side to Topanga Canyon Road bridge, 2.0 miles north of Topanga Beach.

**REGULATION** - None.

**DIVERSION** - Flow through the diversion tunnel can be controlled by TWO slide gates..

**CHANNEL** - Rock and gravel, natural section.

**CONTROL** - None.

**LENGTH OF RECORD** - At Station F54-R, January 1, 1930 to June 4, 1940; at Station F54B-R, June 5, 1940 to January 31, 1990; at Station F54C-R, October 1, 1997 to date.

**REMARKS -** None.

## RUNOFF – STREAM GAGING STATION INFORMATION

# VERDUGO WASH

### At Estelle Avenue.

## STATION NO. F252-R

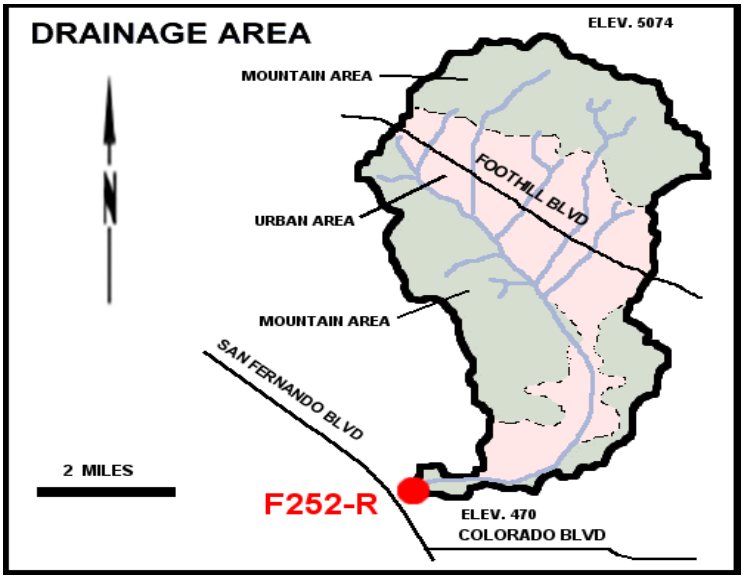


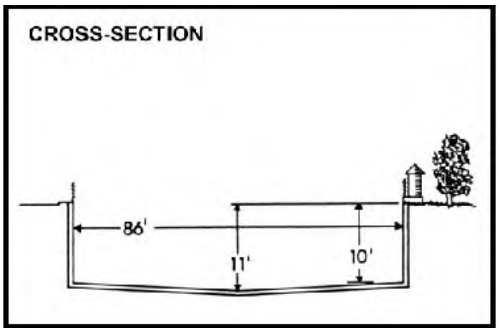


**RECORDER** - Continuous water stage.
**METHOD OF MEASUREMENT** - Wading or from Concord Street bridge.
**DRAINAGE AREA** - 26.8 square miles.
**LOCATION** - 800 feet east of San Fernando Road, 2.0 miles northwest of Glendale.
**REGULATION** - Partially regulated by several debris basins.
**DIVERSION** - None.
**CHANNEL** - Concrete, rectangular section.
**CONTROL** - Channel forms control.
**LENGTH OF RECORD** - December 2, 1935 to date.
**REMARKS -** None.

## RUNOFF – STREAM GAGING STATION INFORMATION

# WALNUT CREEK

### Above Puente Avenue.

## STATION NO. F304-R

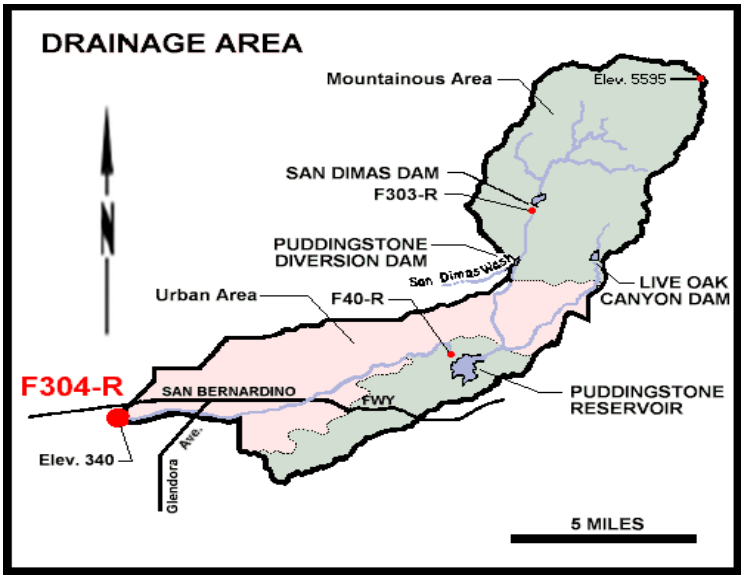


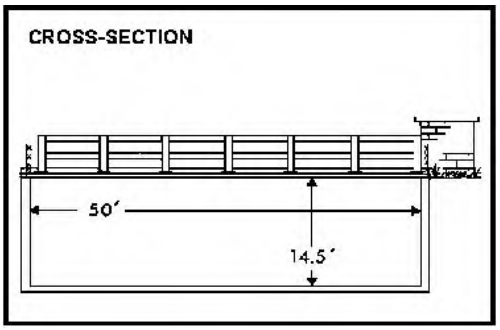


**RECORDER** - 5 min. interval data logger.

**METHOD OF MEASUREMENT** - Wading or from footbridge.

**DRAINAGE AREA** - 57.6 square miles.

**LOCATION** - 845.0 feet upstream of Puente Avenue bridge, Baldwin park.

**REGULATION** - Partially regulated by San Dimas, Puddingstone Diversion, Puddingstone, and Live Oak Dams.

**DIVERSION** - None.

**CHANNEL** - Concrete, rectangular section.

**CONTROL** - Channel forms control.

**LENGTH OF RECORD** - October 14, 1952 to April 11, 1961, January 3, 1962 to date.

**REMARKS** - No record during April 11, 1961 to January 3, 1962 due to channel construction.

## RUNOFF – STREAM GAGING STATION INFORMATION

# WALNUT CREEK

**Below Puddingstone Dam.**

## STATION NO. F40-R

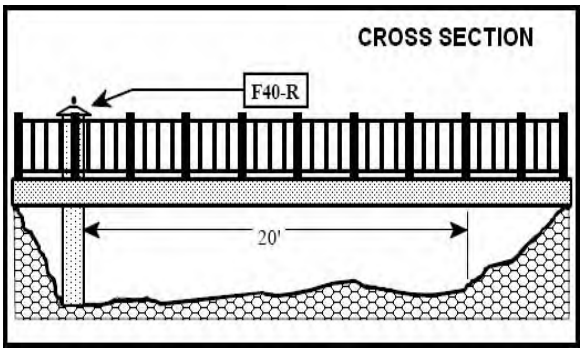


**RECORDER** - Continuous water stage.

**METHOD OF MEASUREMENT** - Wading.

**DRAINAGE AREA** 33.2 square miles.

**LOCATION** - On the right (east) bank about 1000 feet below Puddingstone Dam near San Dimas. Elevation of zero gage height 824.90 feet.

**REGULATION** - Flow regulated by Puddingstone Dam.

**DIVERSION** - San Dimas Water Company diverts outflow from Dam above the station and also releases water to Puddingstone Diversion channel at Juanita street station F307-R, for purchase by Los Angeles County Parks and Recreation Department.

**CHANNEL** - Sand and gravel.

**CONTROL** - Concrete stabilizer.

**LENGTH OF RECORD** - October 1, 1931 to date.

**REMARKS** - None.

# APPENDIX C

## HYDROLOGIC REPORT 2019 – 2020

## RUNOFF - DAILY DISCHARGE

# RUNOFF – DAILY DISCHARGE

Los Angeles County Dept of Public Works USDAY V115 Output 04/20/2021

Summary Report

Site: F81D Alhambra Wash Near Klingerman Street
USGS #:
Beginning Date: 10/01/2019
Ending Date: 09/30/2020

Daily Mean Discharge in Cubic feet/second Water Year Oct 2019 to Sep 2020

| Day | OCT | NOV | DEC | JAN | FEB | MAR | APR | MAY | JUN | JUL | AUG | SEP |
|---|---|---|---|---|---|---|---|---|---|---|---|---|
| 1 | .32 | .27 | .45 | .34 | .39 | .45 | .66 | 1.11 | .57 | .42 | .38 | .43 |
| 2 | .31 | .28 | .38 | .37 | .42 | .35 | .71 | .51 | .47 | .44 | .37 | .38 |
| 3 | .34 | .27 | .37 | .36 | .49 | .39 | .59 | .46 | .54 | .43 | .37 | .40 |
| 4 | .33 | .29 | 145 | .38 | .43 | .40 | .58 | .50 | .51 | .44 | .41 | .40 |
| 5 | .36 | .29 | 1.18 | .40 | .41 | .41 | 10.6 | .86 | .51 | .43 | .38 | .42 |
| 6 | .36 | .29 | .91 | .43 | .41 | .42 | 259 | .55 | .54 | .44 | .39 | .41 |
| 7 | .34 | .31 | 4.08 | .40 | .42 | .51 | 91.2 | .58 | .42 | .81 | .36 | .45 |
| 8 | .44 | .29 | 11.1 | .40 | .44 | .46 | 13.2 | .95 | .45 | .46 | .37 | .49 |
| 9 | .37 | .30 | .78 | .47 | 23.2 | .54 | 131 | .49 | .45 | .46 | .36 | .52 |
| 10 | .32 | .31 | .39 | .51 | .89 | 31.7 | 31.7 | .47 | .55 | .41 | .37 | .42 |
| 11 | .29 | .31 | .36 | .40 | .39 | 2.33 | .81 | .49 | .52 | .43 | .37 | .41 |
| 12 | .30 | .30 | .40 | .41 | .35 | 231 | 2.24 | .57 | .53 | .40 | .36 | .42 |
| 13 | .30 | .31 | .39 | .46 | .37 | 63.1 | 4.37 | .56 | .47 | .41 | .38 | .42 |
| 14 | .32 | .32 | .42 | .47 | .32 | 4.59 | .63 | .46 | .46 | .42 | .37 | .40 |
| 15 | .33 | .32 | .36 | .50 | .31 | 13.6 | .55 | .45 | .58 | .42 | .37 | .41 |
| 16 | .33 | .31 | .38 | 1.07 | .39 | 85.0 | .82 | .47 | .61 | .44 | .38 | .40 |
| 17 | .33 | .29 | .48 | 19.2 | .42 | 2.61 | .85 | .45 | .50 | .44 | .43 | .45 |
| 18 | .30 | .32 | .40 | .42 | .44 | .43 | .64 | 41.4 | .44 | .43 | .44 | .44 |
| 19 | .27 | .33 | .33 | .42 | .36 | 13.7 | .60 | .55 | .43 | .39 | .40 | .49 |
| 20 | .26 | 25.7 | .31 | .42 | .35 | .69 | .90 | .48 | .43 | .48 | .47 | .47 |
| 21 | .29 | .42 | .28 | .51 | .44 | .46 | 1.20 | .46 | .42 | .41 | .39 | .46 |
| 22 | .31 | .34 | 5.44 | .43 | .78 | 93.2 | .98 | .50 | .44 | .43 | .40 | .41 |
| 23 | .30 | .36 | 148 | .52 | .44 | 21.7 | .56 | .47 | .45 | .43 | .38 | .42 |
| 24 | .31 | .40 | .76 | .52 | .37 | .75 | .55 | .41 | .41 | .41 | .39 | .44 |
| 25 | .31 | .39 | 61.3 | .47 | .38 | .47 | .59 | .43 | .48 | .41 | .44 | .38 |
| 26 | .32 | .34 | 447 | .44 | .38 | .48 | .50 | .49 | .45 | .38 | .39 | .45 |
| 27 | .30 | 56.7 | 1.37 | .43 | .45 | .45 | .52 | 1.64 | .48 | .39 | .40 | .44 |
| 28 | .30 | 177 | .41 | .51 | .39 | .52 | .56 | 2.12 | .43 | .41 | .47 | .48 |
| 29 | .29 | 7.16 | .36 | .43 | .40 | .48 | .66 | 2.29 | .59 | .39 | .38 | .46 |
| 30 | .28 | .47 | .38 | .37 | ------ | .55 | .57 | 2.21 | .58 | .41 | .36 | .41 |
| 31 | .27 | ------ | .38 | .39 | ------ | .75 | ------ | 1.52 | ------ | .39 | .39 | ------ |
| Total | 9.80 | 274.99 | 834.15 | 32.85 | 35.23 | 572.49 | 558.34 | 64.90 | 14.71 | 13.46 | 12.12 | 12.98 |
| Mean | .32 | 9.17 | 26.9 | 1.06 | 1.21 | 18.5 | 18.6 | 2.09 | .49 | .43 | .39 | .43 |
| Max | .44 | 177 | 447 | 19.2 | 23.2 | 231 | 259 | 41.4 | .61 | .81 | .47 | .52 |
| Min | .26 | .27 | .28 | .34 | .31 | .35 | .50 | .41 | .41 | .38 | .36 | .38 |
| Acre-Ft | 19 | 545 | 1650 | 65 | 70 | 1140 | 1110 | 129 | 29 | 27 | 24 | 26 |

| | | | | | | | | | | | | |
|---|---|---|---|---|---|---|---|---|---|---|---|---|
| Wtr Year 2020 | Total | 2436.02 | Mean | 6.66 | Max | 447 | Min | .26 | Inst Max | 5700 | Acre-Ft | 4830 |
| Cal Year 2019 | Total | 4287.90 | Mean | 11.7 | Max | 523 | Min | .26 | Inst Max | 7240 | Acre-Ft | 8500 |

# RUNOFF – DAILY DISCHARGE

Los Angeles County Dept of Public Works USDAY V115 Output 04/20/2021

Summary Report

Site: F317 Arcadia Wash Below Grand Avenue
USGS #:
Beginning Date: 10/01/2019
Ending Date: 09/30/2020

Daily Mean Discharge in Cubic feet/second Water Year Oct 2019 to Sep 2020

| Day | OCT | NOV | DEC | JAN | FEB | MAR | APR | MAY | JUN | JUL | AUG | SEP |
|---|---|---|---|---|---|---|---|---|---|---|---|---|
| 1 | .90 | .62 | .54 | .47 | .60 | 11.2 | .68 | .66 | .78 | .86 | .64 | .75 |
| 2 | .77 | .81 | .54 | .58 | .59 | .91 | .58 | .67 | .89 | .74 | .60 | .69 |
| 3 | .77 | .70 | .54 | .51 | .56 | .84 | .56 | .72 | .76 | .73 | .77 | .78 |
| 4 | .62 | .72 | 71.1 | .57 | .69 | .81 | .64 | .71 | .97 | .73 | .90 | .80 |
| 5 | .63 | .78 | .74 | .52 | .65 | .88 | 28.0 | .78 | .70 | .72 | .73 | .95 |
| 6 | .62 | .71 | .76 | .54 | .65 | .82 | 190 | .70 | .74 | .71 | .66 | .81 |
| 7 | .54 | .77 | 11.5 | .66 | .60 | .88 | 72.8 | .66 | .76 | .71 | .64 | .75 |
| 8 | .68 | .76 | 21.1 | .76 | .86 | .68 | 62.8 | .56 | .76 | .70 | .69 | .77 |
| 9 | .68 | .78 | .64 | .68 | 17.9 | .68 | 99.5 | .62 | 1.04 | .69 | .66 | .71 |
| 10 | .70 | .75 | .60 | .77 | .76 | 49.5 | 35.1 | .62 | .60 | .68 | .66 | .68 |
| 11 | .66 | .92 | .59 | .74 | .86 | .80 | .71 | .64 | .59 | .66 | .87 | .72 |
| 12 | .74 | .94 | .58 | .81 | .89 | 117 | 7.76 | .63 | .61 | .75 | .73 | 1.10 |
| 13 | .64 | .90 | .51 | .62 | .78 | 109 | 3.43 | .62 | .75 | .63 | .75 | 1.07 |
| 14 | .66 | .80 | .54 | .71 | .68 | 8.81 | .85 | .64 | .71 | .83 | .74 | .84 |
| 15 | .84 | 1.37 | .53 | .62 | .72 | 11.7 | .81 | .56 | .82 | .66 | .81 | .92 |
| 16 | .73 | .99 | .52 | 2.40 | .71 | 76.6 | .69 | .57 | .82 | .76 | .91 | .76 |
| 17 | 1.28 | .73 | .56 | 14.8 | .67 | 1.80 | .61 | .60 | .72 | 5.28 | .89 | .78 |
| 18 | .61 | 1.62 | .58 | .59 | .71 | .65 | .77 | 30.4 | .76 | .87 | .73 | .67 |
| 19 | .64 | .95 | .57 | .71 | .73 | 24.0 | .59 | .78 | .80 | .65 | .70 | .77 |
| 20 | .62 | 44.8 | .69 | .65 | .69 | .69 | .52 | .73 | .79 | .66 | .71 | .84 |
| 21 | .88 | 2.07 | .65 | .77 | .66 | .64 | .55 | .70 | .66 | .56 | .69 | .68 |
| 22 | .78 | 2.31 | 1.88 | .77 | 1.21 | 51.6 | .57 | .56 | .75 | .45 | .71 | .78 |
| 23 | .69 | 1.28 | 119 | .72 | .91 | 30.9 | .69 | .57 | .77 | .60 | .72 | .68 |
| 24 | .79 | 1.13 | .82 | .69 | .78 | .62 | .49 | .51 | .64 | .52 | .70 | .74 |
| 25 | .65 | 1.69 | 26.6 | .68 | .83 | .63 | .51 | .49 | .79 | .66 | .84 | .67 |
| 26 | .63 | 1.07 | 185 | .60 | .69 | .62 | .52 | .62 | .79 | .55 | .76 | .70 |
| 27 | .71 | 133 | .76 | .57 | .68 | .56 | .58 | .62 | .88 | .62 | .75 | .68 |
| 28 | 1.84 | 159 | .59 | .70 | .68 | .65 | .72 | .62 | .78 | .64 | .71 | .62 |
| 29 | .70 | 1.57 | .52 | .58 | .84 | .60 | .63 | .66 | .92 | .52 | .74 | .88 |
| 30 | .70 | .54 | .51 | .58 | ------ | .58 | .62 | .85 | .85 | .64 | .75 | .73 |
| 31 | .64 | ------ | .55 | .62 | ------ | .75 | ------ | .81 | ------ | .61 | .67 | ------ |
| Total | 23.34 | 365.08 | 450.61 | 35.99 | 38.58 | 506.40 | 513.28 | 49.88 | 23.20 | 25.39 | 22.83 | 23.32 |
| Mean | .75 | 12.2 | 14.5 | 1.16 | 1.33 | 16.3 | 17.1 | 1.61 | .77 | .82 | .74 | .78 |
| Max | 1.84 | 159 | 185 | 14.8 | 17.9 | 117 | 190 | 30.4 | 1.04 | 5.28 | .91 | 1.10 |
| Min | .54 | .54 | .51 | .47 | .56 | .56 | .49 | .49 | .59 | .45 | .60 | .62 |
| Acre-Ft | 46 | 724 | 894 | 71 | 77 | 1000 | 1020 | 99 | 46 | 50 | 45 | 46 |

| | | | | | | | | | | | | |
|---|---|---|---|---|---|---|---|---|---|---|---|---|
| Wtr Year 2020 | Total | 2077.90 | Mean | 5.68 | Max | 190 | Min | .45 | Inst Max | 3120 | Acre-Ft | 4120 |
| Cal Year 2019 | Total | 2965.63 | Mean | 8.13 | Max | 297 | Min | .01 | Inst Max | 2700 | Acre-Ft | 5880 |

# RUNOFF – DAILY DISCHARGE

Los Angeles County Dept of Public Works USDAY V115 Output 04/20/2021

Summary Report

Site: F277 Arroyo Seco Below Devil'S Gate Dam
USGS #:
Beginning Date: 10/01/2019
Ending Date: 09/30/2020

Daily Mean Discharge in Cubic feet/second Water Year Oct 2019 to Sep 2020

| Day | OCT | NOV | DEC | JAN | FEB | MAR | APR | MAY | JUN | JUL | AUG | SEP |
|---|---|---|---|---|---|---|---|---|---|---|---|---|
| 1 | 0 | 0 | 5.99 | 70.3 | .27 | .38 | .33 | .25 | 0 | 0 | 0 | 1.40 |
| 2 | 0 | 0 | 7.54 | 44.6 | .21 | .38 | .37 | .19 | 0 | 0 | 0 | 2.04 |
| 3 | 0 | 0 | 6.34 | 10.3 | .14 | .39 | .38 | .13 | 0 | 0 | 0 | 0 |
| 4 | 0 | 0 | 6.73 | 1.80 | .08 | .51 | .38 | .06 | 0 | 0 | 0 | 0 |
| 5 | 0 | 1.23 | 8.53 | 1.13 | .40 | .65 | .38 | .01 | 0 | 0 | 0 | 0 |
| 6 | 0 | 5.05 | 8.31 | 1.14 | .35 | .81 | 24.0 | 0 | .01 | 0 | 0 | 0 |
| 7 | 0 | 6.79 | 7.34 | 17.6 | .32 | .98 | .85 | 0 | 0 | 0 | 0 | 0 |
| 8 | 0 | 5.92 | 6.60 | 13.3 | .53 | 1.16 | 112 | 0 | 0 | 0 | .01 | 0 |
| 9 | 0 | 3.73 | 30.2 | 1.19 | .82 | 1.36 | 238 | 0 | 0 | 0 | 0 | 0 |
| 10 | 0 | 3.97 | 74.1 | 4.90 | 1.16 | 1.57 | 180 | 0 | 0 | 0 | 0 | 0 |
| 11 | 0 | 3.93 | 22.7 | 4.70 | 1.50 | 1.79 | 62.5 | 0 | 0 | 0 | .02 | 0 |
| 12 | 0 | 5.03 | 4.27 | 3.21 | 1.51 | 2.02 | 5.12 | .01 | 0 | 0 | .02 | 0 |
| 13 | 0 | 5.23 | 2.46 | 4.00 | 1.45 | 2.27 | 3.99 | .06 | 0 | 0 | 0 | 0 |
| 14 | 0 | 8.38 | .51 | 5.18 | 1.39 | 2.53 | 7.29 | .11 | 0 | 0 | 0 | 0 |
| 15 | 0 | 9.38 | 1.42 | 4.23 | 1.33 | 2.82 | 4.22 | .17 | 0 | 0 | 0 | 0 |
| 16 | 0 | 7.59 | 2.45 | 3.79 | 1.27 | 3.43 | .81 | .22 | 0 | 0 | 0 | 0 |
| 17 | 0 | 5.73 | 1.63 | 5.64 | 1.22 | 3.27 | .38 | .27 | 0 | 0 | 0 | 0 |
| 18 | 0 | 3.62 | .36 | 5.36 | 1.16 | 2.72 | .38 | 3.39 | 0 | 0 | 0 | 0 |
| 19 | 0 | 1.13 | .30 | 3.77 | 1.10 | 57.3 | .38 | .37 | 0 | 0 | 0 | 0 |
| 20 | 0 | 1.79 | .13 | 2.15 | .97 | 74.8 | .38 | .69 | 0 | 0 | 0 | 0 |
| 21 | 0 | 6.40 | 0 | 1.89 | .84 | 24.5 | .38 | .30 | 0 | 0 | 0 | 0 |
| 22 | 0 | 9.80 | 0 | 2.07 | .71 | 4.32 | .38 | .25 | 0 | 0 | 0 | 0 |
| 23 | 0 | 4.39 | .36 | 1.58 | .60 | 29.6 | .38 | .21 | 0 | 0 | 0 | 0 |
| 24 | 0 | 4.43 | .02 | 1.24 | .49 | 38.5 | .38 | .17 | 0 | 0 | 0 | 0 |
| 25 | 0 | 2.59 | .87 | 1.08 | .39 | 11.2 | .38 | .13 | 0 | 0 | 0 | 0 |
| 26 | 0 | 3.30 | 5.12 | .93 | .38 | .19 | .38 | .09 | 0 | 0 | 0 | 0 |
| 27 | 0 | 3.44 | 2.87 | .79 | .38 | .29 | .38 | .04 | 0 | 0 | 0 | 0 |
| 28 | 0 | 14.7 | 2.43 | .66 | .38 | .43 | .38 | .01 | 0 | 0 | 0 | 0 |
| 29 | 0 | 15.7 | 1.11 | .54 | .38 | .18 | .37 | 0 | 0 | 0 | .23 | 0 |
| 30 | 0 | 7.15 | .09 | .43 | ------ | .25 | .32 | 0 | 0 | 0 | .39 | 0 |
| 31 | 0 | ------ | 37.5 | .34 | ------ | .28 | ------ | 0 | ------ | 0 | .53 | ------ |
| Total | 0 | 150.40 | 248.28 | 219.84 | 21.73 | 270.88 | 645.87 | 7.13 | 0.01 | 0 | 1.20 | 3.44 |
| Mean | 0 | 5.01 | 8.01 | 7.09 | .75 | 8.74 | 21.5 | .23 | 0 | 0 | .039 | .11 |
| Max | 0 | 15.7 | 74.1 | 70.3 | 1.51 | 74.8 | 238 | 3.39 | .01 | 0 | .53 | 2.04 |
| Min | 0 | 0 | 0 | .34 | .08 | .18 | .32 | 0 | 0 | 0 | 0 | 0 |
| Acre-Ft | 0 | 298 | 492 | 436 | 43 | 537 | 1280 | 14 | .02 | 0 | 2.4 | 6.8 |

| | | | | | | | | | | | | |
|---|---|---|---|---|---|---|---|---|---|---|---|---|
| Wtr Year 2020 | Total | 1568.78 | Mean | 4.29 | Max | 238 | Min | 0 | Inst Max | 454 | Acre-Ft | 3110 |
| Cal Year 2019 | Total | 4309.17 | Mean | 11.8 | Max | 398 | Min | 0 | Inst Max | 811 | Acre-Ft | 8550 |

# RUNOFF – DAILY DISCHARGE

Los Angeles County Dept of Public Works USDAY V115 Output 04/20/2021

Summary Report

Site: F38C Ballona Creek Above Sawtelle Boulevard
USGS #:
Beginning Date: 10/01/2019
Ending Date: 09/30/2020

Daily Mean Discharge in Cubic feet/second Water Year Oct 2019 to Sep 2020

| Day | OCT | NOV | DEC | JAN | FEB | MAR | APR | MAY | JUN | JUL | AUG | SEP |
|---|---|---|---|---|---|---|---|---|---|---|---|---|
| 1 | 38.9 | 37.4 | 4.26 | 4.37 | 4.59 | 6.88 | 5.36 | 8.39 | 7.82 | 6.86 | 7.38 | 6.85 |
| 2 | 46.9 | 41.4 | 4.94 | 4.33 | 4.68 | 8.29 | 5.27 | 7.90 | 9.20 | 7.01 | 7.48 | 7.06 |
| 3 | 52.5 | 39.1 | 4.39 | 4.28 | 4.62 | 7.91 | 5.39 | 7.83 | 8.95 | 7.44 | 7.20 | 7.30 |
| 4 | 79.2 | 34.2 | 1050 | 3.81 | 5.60 | 7.72 | 5.33 | 9.62 | 9.17 | 8.18 | 6.19 | 6.55 |
| 5 | 60.7 | 38.5 | 5.74 | 3.65 | 5.62 | 7.38 | 38.2 | 9.19 | 5.55 | 8.62 | 6.63 | 6.69 |
| 6 | 66.1 | 41.3 | 23.7 | 4.92 | 5.18 | 7.94 | 1410 | 9.10 | 5.53 | 8.78 | 7.19 | 7.06 |
| 7 | 73.9 | 40.4 | 11.3 | 4.66 | 5.61 | 8.78 | 795 | 9.21 | 4.87 | 9.38 | 7.04 | 7.29 |
| 8 | 31.6 | 36.8 | 35.0 | 4.94 | 5.92 | 15.0 | 33.4 | 9.27 | 5.29 | 9.45 | 6.49 | 8.19 |
| 9 | 8.17 | 34.5 | 5.64 | 4.50 | 46.8 | 14.5 | 581 | 9.01 | 5.91 | 9.56 | 7.15 | 8.08 |
| 10 | 9.95 | 28.0 | 4.30 | 3.90 | 6.34 | 127 | 145 | 8.78 | 6.47 | 9.55 | 8.55 | 7.69 |
| 11 | 7.56 | 25.4 | 3.89 | 4.20 | 6.23 | 6.01 | 7.52 | 8.44 | 7.11 | 8.99 | 8.81 | 7.90 |
| 12 | 16.7 | 29.4 | 3.45 | 4.04 | 6.49 | 1420 | 5.93 | 6.02 | 4.92 | 9.32 | 9.74 | 7.85 |
| 13 | 14.9 | 22.1 | 3.34 | 4.38 | 7.40 | 534 | 10.3 | 7.06 | 4.46 | 9.94 | 8.75 | 8.13 |
| 14 | 14.1 | 10.3 | 3.10 | 4.32 | 7.74 | 90.3 | 5.35 | 6.51 | 3.94 | 9.93 | 9.15 | 9.01 |
| 15 | 14.1 | 12.9 | 2.72 | 4.67 | 7.93 | 44.3 | 5.18 | 6.36 | 4.73 | 9.35 | 8.10 | 8.64 |
| 16 | 13.5 | 16.0 | 2.95 | 9.80 | 8.07 | 369 | 5.36 | 6.03 | 6.38 | 9.30 | 8.07 | 8.73 |
| 17 | 14.7 | 17.9 | 3.43 | 239 | 8.70 | 9.34 | 5.43 | 6.89 | 7.32 | 9.56 | 8.38 | 9.30 |
| 18 | 13.5 | 20.1 | 3.45 | 3.81 | 8.69 | 5.13 | 5.45 | 42.9 | 7.85 | 13.8 | 9.79 | 9.36 |
| 19 | 12.0 | 21.0 | 4.34 | 4.48 | 9.39 | 14.5 | 6.99 | 6.58 | 7.30 | 8.85 | 9.86 | 9.92 |
| 20 | 13.7 | 235 | 3.41 | 4.79 | 8.16 | 3.95 | 7.18 | 8.17 | 6.66 | 20.1 | 9.62 | 9.58 |
| 21 | 15.0 | 18.2 | 3.23 | 4.70 | 7.11 | 3.66 | 8.21 | 8.26 | 6.39 | 13.2 | 8.58 | 10.7 |
| 22 | 9.67 | 18.8 | 472 | 3.86 | 41.0 | 1220 | 8.22 | 7.51 | 6.97 | 10.7 | 6.49 | 10.8 |
| 23 | 6.96 | 17.7 | 1230 | 4.04 | 6.63 | 159 | 9.61 | 7.01 | 7.75 | 10.9 | 6.51 | 11.4 |
| 24 | 10.4 | 22.8 | 5.72 | 4.37 | 6.55 | 5.84 | 7.96 | 6.84 | 6.63 | 12.3 | 7.14 | 12.2 |
| 25 | 10.8 | 31.3 | 486 | 5.17 | 6.90 | 5.15 | 7.71 | 6.46 | 5.79 | 12.2 | 5.71 | 11.6 |
| 26 | 14.0 | 30.6 | 1300 | 4.77 | 7.50 | 5.12 | 8.50 | 6.50 | 5.88 | 11.2 | 7.88 | 10.9 |
| 27 | 17.4 | 515 | 6.29 | 4.38 | 8.41 | 5.28 | 7.84 | 6.92 | 5.65 | 11.0 | 6.40 | 11.9 |
| 28 | 22.0 | 1280 | 5.27 | 4.37 | 7.70 | 4.99 | 8.19 | 7.09 | 5.86 | 11.7 | 5.39 | 13.6 |
| 29 | 26.4 | 181 | 4.52 | 4.54 | 6.73 | 5.04 | 8.84 | 6.42 | 6.16 | 8.82 | 5.94 | 12.4 |
| 30 | 30.1 | 43.6 | 5.05 | 4.14 | ------ | 5.37 | 8.22 | 6.62 | 6.39 | 8.14 | 5.84 | 11.6 |
| 31 | 34.1 | ------ | 4.59 | 4.37 | ------ | 5.31 | ------ | 8.10 | ------ | 7.66 | 6.42 | ------ |
| Total | 799.51 | 2940.7 | 4706.02 | 375.56 | 272.29 | 4132.69 | 3171.94 | 270.99 | 192.90 | 311.79 | 233.87 | 278.28 |
| Mean | 25.8 | 98.0 | 152 | 12.1 | 9.39 | 133 | 106 | 8.74 | 6.43 | 10.1 | 7.54 | 9.28 |
| Max | 79.2 | 1280 | 1300 | 239 | 46.8 | 1420 | 1410 | 42.9 | 9.20 | 20.1 | 9.86 | 13.6 |
| Min | 6.96 | 10.3 | 2.72 | 3.65 | 4.59 | 3.66 | 5.18 | 6.02 | 3.94 | 6.86 | 5.39 | 6.55 |
| Acre-Ft | 1590 | 5830 | 9330 | 745 | 540 | 8200 | 6290 | 538 | 383 | 618 | 464 | 552 |

| | | | | | | | | | | | | |
|---|---|---|---|---|---|---|---|---|---|---|---|---|
| Wtr Year 2020 | Total | 17686.54 | Mean | 48.3 | Max | 1420 | Min | 2.72 | Inst Max | 11600 | Acre-Ft | 35080 |
| Cal Year 2019 | Total | 31096.41 | Mean | 85.2 | Max | 2630 | Min | 2.72 | Inst Max | 15600 | Acre-Ft | 61680 |

# RUNOFF – DAILY DISCHARGE

Los Angeles County Dept of Public Works USDAY V115 Output 04/20/2021

Summary Report

Site: F120B Big Dalton Creek Below Big Dalton Dam
USGS #:
Beginning Date: 10/01/2019
Ending Date: 09/30/2020

Daily Mean Discharge in Cubic feet/second Water Year Oct 2019 to Sep 2020

| Day | OCT | NOV | DEC | JAN | FEB | MAR | APR | MAY | JUN | JUL | AUG | SEP |
|---|---|---|---|---|---|---|---|---|---|---|---|---|
| 1 | .73 | 0 | .20 | .70 | .47 | .80 | .10 | 1.18 | .90 | .91 | .35 | 0 |
| 2 | .68 | 0 | .20 | .70 | .44 | .80 | .06 | 1.15 | .89 | .91 | .21 | 0 |
| 3 | .65 | 0 | .20 | .70 | .46 | .80 | 0 | 1.18 | .88 | .92 | .37 | 0 |
| 4 | .63 | 0 | .44 | .52 | .44 | .80 | 0 | 1.17 | .90 | .90 | .44 | 0 |
| 5 | .60 | 0 | .44 | .50 | .30 | .80 | 0 | 1.12 | .90 | .87 | .63 | 0 |
| 6 | .58 | 0 | .35 | .48 | .10 | .80 | .43 | 1.07 | .91 | .87 | .57 | 0 |
| 7 | .52 | 0 | .30 | .38 | .10 | .80 | 7.16 | 1.05 | .91 | .89 | .62 | 0 |
| 8 | .48 | 0 | .34 | .30 | .10 | .80 | 10.7 | 1.04 | .90 | .90 | .48 | 0 |
| 9 | .50 | 0 | .40 | .30 | .10 | .75 | 10.6 | 1.00 | .91 | .90 | .32 | 0 |
| 10 | .58 | 0 | .40 | .30 | .04 | .71 | 10.6 | 1.01 | .90 | .91 | .45 | 0 |
| 11 | .52 | 0 | .30 | .30 | 0 | .83 | 9.93 | .99 | .90 | .96 | .44 | 0 |
| 12 | .50 | 0 | .30 | .30 | 0 | 1.20 | 9.80 | .97 | .90 | .94 | .33 | 0 |
| 13 | .53 | 0 | .30 | .30 | 0 | 1.73 | 9.39 | .97 | .91 | .94 | .42 | 0 |
| 14 | .54 | 0 | .22 | .30 | 0 | 1.68 | 9.12 | .97 | .91 | .96 | .42 | 0 |
| 15 | .50 | 0 | .20 | .30 | 0 | 1.59 | 8.76 | .99 | .90 | .98 | .28 | 0 |
| 16 | .48 | 0 | .20 | .30 | 0 | 1.57 | 8.28 | 1.00 | .91 | .53 | .51 | 0 |
| 17 | .52 | 0 | .20 | .30 | 0 | 1.58 | 7.90 | 1.01 | .91 | .53 | .15 | 0 |
| 18 | .54 | 0 | .20 | .30 | 0 | 1.49 | 11.6 | 1.07 | .91 | .84 | .13 | 0 |
| 19 | .57 | 0 | .20 | .38 | 0 | 1.45 | 12.3 | 1.02 | .92 | .63 | .19 | 0 |
| 20 | .55 | 0 | .20 | .39 | 0 | 1.59 | 11.4 | 1.05 | .91 | .41 | .11 | 0 |
| 21 | .50 | 0 | .20 | .37 | 0 | 1.59 | 9.57 | 1.00 | .91 | .52 | 0 | 0 |
| 22 | .45 | 0 | .20 | .40 | 0 | 1.59 | 2.07 | .96 | .90 | .50 | .07 | 0 |
| 23 | .32 | 0 | .22 | .35 | 0 | 1.12 | 1.23 | .90 | .90 | .33 | 0 | 0 |
| 24 | .20 | 0 | .27 | .30 | 0 | .30 | 1.47 | .87 | .90 | .30 | 0 | 0 |
| 25 | .10 | 0 | .32 | .30 | 0 | .30 | 1.47 | .82 | .90 | .30 | .02 | 0 |
| 26 | .05 | 0 | .65 | .30 | 0 | .26 | 1.47 | .81 | .88 | .30 | 0 | 0 |
| 27 | 0 | .12 | .34 | .39 | 0 | .20 | 1.47 | .84 | .88 | .30 | .07 | 0 |
| 28 | 0 | .37 | .40 | .40 | 0 | .19 | 1.47 | .86 | .91 | .30 | .10 | 0 |
| 29 | 0 | .33 | .50 | .44 | 0 | .14 | 1.23 | .90 | .90 | .30 | .10 | 0 |
| 30 | 0 | .26 | .54 | .49 | ------ | .10 | 1.11 | .91 | .89 | .30 | .05 | 0 |
| 31 | 0 | ------ | .70 | .50 | ------ | .10 | ------ | .90 | ------ | .30 | 0 | ------ |
| Total | 12.82 | 1.08 | 9.93 | 12.29 | 2.55 | 28.46 | 160.69 | 30.78 | 27.05 | 20.45 | 7.83 | 0 |
| Mean | .41 | .036 | .32 | .40 | .088 | .92 | 5.36 | .99 | .90 | .66 | .25 | 0 |
| Max | .73 | .37 | .70 | .70 | .47 | 1.73 | 12.3 | 1.18 | .92 | .98 | .63 | 0 |
| Min | 0 | 0 | .20 | .30 | 0 | .10 | 0 | .81 | .88 | .30 | 0 | 0 |
| Acre-Ft | 25 | 2.1 | 20 | 24 | 5.1 | 56 | 319 | 61 | 54 | 41 | 16 | 0 |

| | | | | | | | | | | | | |
|---|---|---|---|---|---|---|---|---|---|---|---|---|
| Wtr Year 2020 | Total | 313.93 | Mean | .86 | Max | 12.3 | Min | 0 | Inst Max | 14.5 | Acre-Ft | 623 |
| Cal Year 2019 | Total | 756.09 | Mean | 2.07 | Max | 18.6 | Min | 0 | Inst Max | 211 | Acre-Ft | 1500 |

# RUNOFF – DAILY DISCHARGE

Los Angeles County Dept of Public Works USDAY V115 Output 04/20/2021

Summary Report

Site: F394 Big Rock Creek Upstream from Pallett Creek
USGS #:
Beginning Date: 10/01/2019
Ending Date: 09/30/2020

Daily Mean Discharge in Cubic feet/second Water Year Oct 2019 to Sep 2020

| Day | OCT | NOV | DEC | JAN | FEB | MAR | APR | MAY | JUN | JUL | AUG | SEP |
|---|---|---|---|---|---|---|---|---|---|---|---|---|
| 1 | 6.59 | 4.91 | 14.3 | 11.7 | 7.27 | 9.24 | 43.1 | 67.3 | 24.2 | 14.3 | 12.6 | 9.04 |
| 2 | 6.43 | 5.38 | 14.4 | 14.6 | 8.91 | 13.8 | 47.7 | 57.5 | 23.8 | 15.5 | 11.3 | 9.52 |
| 3 | 6.04 | 5.64 | 15.5 | 17.4 | 10.5 | 9.65 | 48.8 | 46.7 | 21.3 | 13.1 | 11.4 | 10.2 |
| 4 | 4.32 | 6.21 | 55.0 | 16.1 | 8.66 | 9.48 | 48.1 | 38.9 | 20.5 | 12.9 | 12.1 | 9.71 |
| 5 | 3.48 | 6.23 | 27.3 | 15.9 | 6.86 | 9.52 | 52.3 | 34.6 | 24.7 | 13.6 | 11.9 | 8.00 |
| 6 | 3.28 | 6.81 | 14.3 | 13.5 | 6.25 | 10.6 | 136 | 32.0 | 24.5 | 12.3 | 11.4 | 8.24 |
| 7 | 3.29 | 6.95 | 31.6 | 10.2 | 7.89 | 12.1 | 112 | 38.4 | 23.8 | 13.5 | 12.1 | 9.38 |
| 8 | 3.83 | 6.85 | 43.5 | 10.5 | 7.68 | 14.6 | 100 | 35.8 | 25.1 | 14.0 | 12.9 | 9.09 |
| 9 | 4.22 | 6.84 | 32.9 | 10.9 | 9.53 | 12.7 | 95.2 | 36.5 | 24.6 | 13.8 | 9.63 | 8.78 |
| 10 | 4.60 | 7.27 | 20.5 | 11.3 | 10.3 | 17.7 | 95.4 | 35.7 | 21.7 | 13.2 | 11.1 | 8.33 |
| 11 | 5.05 | 7.60 | 14.3 | 11.6 | 9.31 | 23.2 | 94.7 | 39.1 | 17.7 | 12.4 | 12.2 | 8.05 |
| 12 | 5.15 | 7.30 | 11.3 | 13.4 | 7.19 | 66.0 | 92.9 | 38.6 | 18.0 | 11.6 | 12.3 | 8.07 |
| 13 | 5.23 | 6.21 | 10.1 | 14.1 | 7.21 | 33.1 | 95.2 | 38.5 | 17.1 | 12.0 | 11.7 | 7.86 |
| 14 | 5.45 | 6.88 | 11.8 | 14.7 | 7.56 | 25.9 | 93.7 | 37.5 | 16.6 | 12.9 | 11.2 | 7.73 |
| 15 | 5.45 | 7.99 | 14.1 | 14.1 | 7.96 | 27.2 | 85.6 | 37.1 | 17.6 | 14.2 | 10.9 | 6.95 |
| 16 | 5.27 | 6.91 | 14.5 | 13.4 | 8.28 | 38.7 | 83.4 | 36.3 | 15.2 | 13.6 | 10.8 | 7.10 |
| 17 | 4.65 | 6.90 | 12.9 | 16.5 | 8.31 | 31.7 | 86.9 | 35.7 | 17.1 | 12.0 | 13.0 | 7.99 |
| 18 | 5.55 | 7.23 | 11.4 | 16.1 | 7.19 | 36.2 | 76.4 | 34.1 | 16.6 | 12.1 | 12.2 | 7.46 |
| 19 | 6.07 | 7.67 | 12.5 | 16.1 | 7.21 | 33.8 | 69.5 | 35.2 | 16.1 | 11.4 | 12.4 | 7.75 |
| 20 | 6.20 | 9.71 | 13.1 | 13.7 | 7.81 | 30.9 | 67.6 | 31.8 | 14.9 | 12.1 | 11.6 | 8.99 |
| 21 | 6.48 | 10.4 | 12.5 | 10.9 | 7.97 | 29.1 | 66.3 | 29.5 | 15.5 | 12.1 | 9.44 | 8.05 |
| 22 | 6.50 | 9.32 | 13.0 | 10.6 | 9.16 | 27.0 | 65.9 | 30.8 | 15.2 | 13.5 | 9.28 | 6.93 |
| 23 | 6.61 | 7.68 | 39.9 | 10.7 | 9.59 | 59.1 | 70.2 | 31.3 | 15.0 | 14.1 | 8.81 | 6.66 |
| 24 | 5.96 | 7.57 | 20.7 | 10.6 | 10.4 | 57.6 | 77.5 | 28.1 | 16.1 | 14.0 | 11.6 | 7.17 |
| 25 | 5.20 | 7.28 | 13.7 | 9.81 | 11.1 | 54.2 | 80.8 | 27.6 | 15.6 | 13.2 | 10.4 | 6.47 |
| 26 | 5.85 | 7.60 | 23.1 | 7.14 | 7.61 | 52.3 | 83.9 | 29.8 | 16.0 | 12.6 | 9.38 | 5.61 |
| 27 | 6.08 | 11.1 | 21.9 | 7.45 | 5.97 | 49.6 | 76.5 | 26.3 | 16.1 | 14.8 | 9.56 | 5.63 |
| 28 | 7.57 | 10.4 | 18.3 | 7.51 | 5.73 | 47.4 | 68.6 | 25.6 | 14.6 | 14.0 | 9.58 | 5.95 |
| 29 | 7.84 | 14.8 | 16.8 | 8.12 | 6.06 | 45.0 | 73.7 | 26.7 | 15.8 | 11.9 | 9.11 | 6.15 |
| 30 | 7.41 | 10.5 | 13.8 | 8.09 | ------ | 43.4 | 73.0 | 25.7 | 14.2 | 12.1 | 9.87 | 6.17 |
| 31 | 5.44 | ------ | 10.8 | 7.19 | ------ | 42.4 | ------ | 26.2 | ------ | 12.6 | 10.4 | ------ |
| Total | 171.09 | 234.14 | 599.8 | 373.91 | 235.47 | 973.19 | 2360.9 | 1094.9 | 555.2 | 405.4 | 342.16 | 233.03 |
| Mean | 5.52 | 7.80 | 19.3 | 12.1 | 8.12 | 31.4 | 78.7 | 35.3 | 18.5 | 13.1 | 11.0 | 7.77 |
| Max | 7.84 | 14.8 | 55.0 | 17.4 | 11.1 | 66.0 | 136 | 67.3 | 25.1 | 15.5 | 13.0 | 10.2 |
| Min | 3.28 | 4.91 | 10.1 | 7.14 | 5.73 | 9.24 | 43.1 | 25.6 | 14.2 | 11.4 | 8.81 | 5.61 |
| Acre-Ft | 339 | 464 | 1190 | 742 | 467 | 1930 | 4680 | 2170 | 1100 | 804 | 679 | 462 |

| | | | | | | | | | | | | |
|---|---|---|---|---|---|---|---|---|---|---|---|---|
| Wtr Year 2020 | Total | 7579.19 | Mean | 20.7 | Max | 136 | Min | 3.28 | Inst Max | 278 | Acre-Ft | 15030 |
| Cal Year 2019 | Total | 10969.79 | Mean | 30.1 | Max | 476 | Min | .76 | Inst Max | 1080 | Acre-Ft | 21760 |

# RUNOFF – DAILY DISCHARGE

Los Angeles County Dept of Public Works USDAY V115 Output 04/20/2021

Summary Report

Site: F168B Big Tujunga Creek below Big Tujunga Dam
USGS #:
Beginning Date: 10/01/2019
Ending Date: 09/30/2020

Daily Mean Discharge in Cubic feet/second Water Year Oct 2019 to Sep 2020

| Day | OCT | NOV | DEC | JAN | FEB | MAR | APR | MAY | JUN | JUL | AUG | SEP |
|---|---|---|---|---|---|---|---|---|---|---|---|---|
| 1 | 10.5 | 0 | .31 | .17 | 0 | 0 | 159 | 33.3 | 9.06 | 5.94 | 4.35 | 4.58 |
| 2 | 10.8 | 0 | .07 | .09 | 0 | .05 | 189 | 33.9 | 6.65 | 5.90 | 4.62 | 4.24 |
| 3 | 10.8 | 0 | .01 | 0 | 0 | .01 | 123 | 33.7 | 5.86 | 6.04 | 4.70 | 4.12 |
| 4 | 10.8 | 0 | 1.02 | 0 | .01 | 0 | 46.3 | 33.4 | 5.78 | 5.94 | 4.65 | 4.04 |
| 5 | 10.7 | 0 | .43 | 0 | 0 | 0 | 2.36 | 33.7 | 6.00 | 5.87 | 4.67 | 4.01 |
| 6 | 10.6 | 0 | .21 | 0 | 0 | 0 | 10.1 | 33.5 | 6.13 | 5.76 | 4.70 | 3.90 |
| 7 | 10.3 | 0 | .32 | 0 | 0 | .04 | 3.34 | 21.6 | 6.02 | 6.03 | 4.66 | 4.16 |
| 8 | 10.5 | 0 | 1.15 | 0 | 0 | .02 | 3.54 | 13.6 | 6.05 | 6.03 | 4.63 | 4.35 |
| 9 | 10.7 | 0 | .43 | 0 | 0 | .05 | 3.69 | 13.4 | 5.93 | 5.28 | 4.69 | 4.38 |
| 10 | 10.0 | 0 | .05 | 0 | .01 | .11 | 2.24 | 12.9 | 5.98 | 5.40 | 4.69 | 4.72 |
| 11 | 9.13 | 0 | 0 | 0 | 0 | .06 | 1.19 | 11.5 | 6.17 | 5.61 | 4.36 | 4.51 |
| 12 | 9.34 | 0 | 0 | 0 | 0 | 1.37 | .90 | 10.8 | 6.03 | 5.30 | 4.69 | 4.32 |
| 13 | 9.29 | 0 | 0 | 0 | 0 | 1.27 | 59.2 | 11.1 | 6.04 | 5.47 | 4.89 | 4.55 |
| 14 | 9.45 | 0 | 0 | 0 | 0 | .51 | 192 | 11.0 | 6.11 | 5.29 | 4.54 | 4.71 |
| 15 | 8.84 | 0 | 0 | 0 | 0 | .41 | 225 | 11.0 | 5.98 | 4.94 | 4.17 | 4.54 |
| 16 | .70 | 0 | 0 | 0 | 0 | 2.90 | 225 | 11.2 | 5.51 | 5.15 | 4.52 | 4.22 |
| 17 | 1.44 | 0 | 0 | .01 | 0 | 1.84 | 197 | 11.3 | 5.60 | 5.51 | 4.36 | 4.06 |
| 18 | .38 | 0 | 0 | 0 | 0 | 1.02 | 183 | 11.5 | 5.79 | 5.14 | 4.39 | 4.00 |
| 19 | 0 | 0 | 0 | 0 | 0 | .77 | 185 | 11.3 | 5.92 | 5.46 | 4.41 | 4.20 |
| 20 | 0 | 0 | 0 | 0 | 0 | .70 | 118 | 11.3 | 6.02 | 5.30 | 4.38 | 4.05 |
| 21 | 0 | 0 | 0 | 0 | 0 | .54 | 38.9 | 11.3 | 6.23 | 5.31 | 4.90 | 4.13 |
| 22 | 0 | 0 | .04 | 0 | 0 | .83 | 37.2 | 11.2 | 6.20 | 5.16 | 4.70 | 4.31 |
| 23 | 0 | 0 | 1.33 | 0 | 0 | 1.31 | 44.2 | 11.3 | 6.20 | 4.89 | 4.64 | 4.38 |
| 24 | 0 | 0 | .48 | 0 | 0 | .70 | 47.2 | 11.4 | 6.04 | 4.55 | 4.39 | 4.25 |
| 25 | 0 | 0 | .65 | 0 | 0 | .69 | 47.4 | 11.2 | 5.82 | 4.55 | 4.44 | 4.53 |
| 26 | 0 | 0 | 2.76 | 0 | 0 | .63 | 48.1 | 11.1 | 5.67 | 4.03 | 4.27 | 4.69 |
| 27 | 0 | .47 | .99 | 0 | 0 | .40 | 48.7 | 10.6 | 5.42 | 4.13 | 4.39 | 4.70 |
| 28 | 0 | 1.70 | .55 | 0 | 0 | .30 | 44.5 | 10.3 | 5.68 | 4.61 | 4.70 | 4.26 |
| 29 | 0 | .89 | .40 | 0 | 0 | .24 | 34.2 | 10.4 | 5.66 | 4.44 | 4.89 | 4.44 |
| 30 | 0 | .53 | .38 | 0 | ------ | .16 | 34.9 | 10.5 | 5.79 | 4.25 | 4.49 | 4.81 |
| 31 | 0 | ------ | .26 | 0 | ------ | 32.1 | ------ | 10.4 | ------ | 4.35 | 4.81 | ------ |
| Total | 154.27 | 3.59 | 11.84 | 0.27 | 0.02 | 49.03 | 2354.16 | 494.7 | 181.34 | 161.63 | 141.69 | 130.16 |
| Mean | 4.98 | .12 | .38 | .009 | .001 | 1.58 | 78.5 | 16.0 | 6.04 | 5.21 | 4.57 | 4.34 |
| Max | 10.8 | 1.70 | 2.76 | .17 | .01 | 32.1 | 225 | 33.9 | 9.06 | 6.04 | 4.90 | 4.81 |
| Min | 0 | 0 | 0 | 0 | 0 | 0 | .90 | 10.3 | 5.42 | 4.03 | 4.17 | 3.90 |
| Acre-Ft | 306 | 7.1 | 23 | .54 | .04 | 97 | 4670 | 981 | 360 | 321 | 281 | 258 |

| | | | | | | | | | | | | |
|---|---|---|---|---|---|---|---|---|---|---|---|---|
| Wtr Year 2020 | Total | 3682.70 | Mean | 10.1 | Max | 225 | Min | 0 | Inst Max | 241 | Acre-Ft | 7300 |
| Cal Year 2019 | Total | 13645.84 | Mean | 37.4 | Max | 363 | Min | 0 | Inst Max | 742 | Acre-Ft | 27070 |

# RUNOFF – DAILY DISCHARGE

Los Angeles County Dept of Public Works USDAY V115 Output 04/20/2021

Summary Report

Site: F377B Bouquet Creek Above Bouquet Canyon Road
USGS #:
Beginning Date: 10/01/2019
Ending Date: 09/30/2020

Daily Mean Discharge in Cubic feet/second Water Year Oct 2019 to Sep 2020

| Day | OCT | NOV | DEC | JAN | FEB | MAR | APR | MAY | JUN | JUL | AUG | SEP |
|---|---|---|---|---|---|---|---|---|---|---|---|---|
| 1 | 0 | 0 | 0 | 0 | 0 | 0 | 0 | 0 | 0 | 0 | 0 | 0 |
| 2 | 0 | 0 | 0 | 0 | 0 | 0 | 0 | 0 | 0 | 0 | 0 | 0 |
| 3 | 0 | 0 | 0 | 0 | 0 | 0 | 0 | 0 | 0 | 0 | 0 | 0 |
| 4 | 0 | 0 | 35.3 | 0 | 0 | 0 | 0 | 0 | 0 | 0 | 0 | 0 |
| 5 | 0 | 0 | 0 | 0 | 0 | 0 | 0 | 0 | 0 | 0 | 0 | 0 |
| 6 | 0 | 0 | 0 | 0 | 0 | 0 | 21.0 | 0 | 0 | 0 | 0 | 0 |
| 7 | 0 | 0 | .04 | 0 | 0 | 0 | 24.6 | 0 | 0 | 0 | 0 | 0 |
| 8 | 0 | 0 | .33 | 0 | 0 | 0 | 2.29 | 0 | 0 | 0 | 0 | 0 |
| 9 | 0 | 0 | 0 | 0 | 0 | 0 | 6.95 | 0 | 0 | 0 | 0 | 0 |
| 10 | 0 | 0 | 0 | 0 | 0 | 0 | 3.48 | 0 | 0 | 0 | 0 | 0 |
| 11 | 0 | 0 | 0 | 0 | 0 | .08 | 0 | 0 | 0 | 0 | 0 | 0 |
| 12 | 0 | 0 | 0 | 0 | 0 | 28.4 | 0 | 0 | 0 | 0 | 0 | 0 |
| 13 | 0 | 0 | 0 | 0 | 0 | 26.7 | 0 | 0 | 0 | 0 | 0 | 0 |
| 14 | 0 | 0 | 0 | 0 | 0 | 3.19 | 0 | 0 | 0 | 0 | 0 | 0 |
| 15 | 0 | 0 | 0 | 0 | 0 | .87 | 0 | 0 | 0 | 0 | 0 | 0 |
| 16 | 0 | 0 | 0 | .48 | 0 | 17.7 | 0 | 0 | 0 | 0 | 0 | 0 |
| 17 | 0 | 0 | 0 | .59 | 0 | .36 | 0 | 0 | 0 | 0 | 0 | 0 |
| 18 | 0 | 0 | 0 | 0 | 0 | 0 | 0 | 0 | 0 | 0 | 0 | 0 |
| 19 | 0 | 0 | 0 | 0 | 0 | .51 | 0 | 0 | 0 | 0 | 0 | 0 |
| 20 | 0 | 0 | 0 | 0 | 0 | 0 | 0 | 0 | 0 | 0 | 0 | 0 |
| 21 | 0 | 0 | 0 | 0 | 0 | 0 | 0 | 0 | 0 | 0 | 0 | 0 |
| 22 | 0 | 0 | .61 | 0 | 0 | 4.77 | 0 | 0 | 0 | 0 | 0 | 0 |
| 23 | 0 | 0 | 5.82 | 0 | 0 | .69 | 0 | 0 | 0 | 0 | 0 | 0 |
| 24 | 0 | 0 | 0 | 0 | 0 | 0 | 0 | 0 | 0 | 0 | 0 | 0 |
| 25 | 0 | 0 | 19.3 | 0 | 0 | 0 | 0 | 0 | 0 | 0 | 0 | 0 |
| 26 | 0 | 0 | 63.5 | 0 | 0 | .24 | 0 | 0 | 0 | 0 | 0 | 0 |
| 27 | 0 | 6.11 | 0 | 0 | 0 | 0 | 0 | 0 | 0 | 0 | 0 | 0 |
| 28 | 0 | 45.7 | 0 | 0 | 0 | 0 | 0 | 0 | 0 | 0 | 0 | 0 |
| 29 | 0 | .49 | 0 | 0 | 0 | 0 | 0 | 0 | 0 | 0 | 0 | 0 |
| 30 | 0 | 1.19 | 0 | 0 | ------ | 0 | 0 | 0 | 0 | 0 | 0 | 0 |
| 31 | 0 | ------ | 0 | 0 | ------ | 0 | ------ | 0 | ------ | 0 | 0 | ------ |
| Total | 0 | 53.49 | 124.90 | 1.07 | 0 | 83.51 | 58.32 | 0 | 0 | 0 | 0 | 0 |
| Mean | 0 | 1.78 | 4.03 | .035 | 0 | 2.69 | 1.94 | 0 | 0 | 0 | 0 | 0 |
| Max | 0 | 45.7 | 63.5 | .59 | 0 | 28.4 | 24.6 | 0 | 0 | 0 | 0 | 0 |
| Min | 0 | 0 | 0 | 0 | 0 | 0 | 0 | 0 | 0 | 0 | 0 | 0 |
| Acre-Ft | 0 | 106 | 248 | 2.1 | 0 | 166 | 116 | 0 | 0 | 0 | 0 | 0 |

| | | | | | | | | | | | | |
|---|---|---|---|---|---|---|---|---|---|---|---|---|
| Wtr Year 2020 | Total | 321.29 | Mean | .88 | Max | 63.5 | Min | 0 | Inst Max | 719 | Acre-Ft | 637 |
| Cal Year 2019 | Total | 633.69 | Mean | 1.74 | Max | 67.7 | Min | 0 | Inst Max | 719 | Acre-Ft | 1260 |

# RUNOFF – DAILY DISCHARGE

Los Angeles County Dept of Public Works USDAY V115 Output 04/20/2021

Summary Report

Site: F329 Bradbury Channel Below Central Avenue
USGS #:
Beginning Date: 10/01/2019
Ending Date: 09/30/2020

Daily Mean Discharge in Cubic feet/second Water Year Oct 2019 to Sep 2020

| Day | OCT | NOV | DEC | JAN | FEB | MAR | APR | MAY | JUN | JUL | AUG | SEP |
|---|---|---|---|---|---|---|---|---|---|---|---|---|
| 1 | 0 | .08 | .03 | .01 | 0 | .21 | .01 | 0 | .07 | .09 | 0 | 0 |
| 2 | .01 | .07 | .01 | .01 | .04 | .02 | .01 | 0 | .07 | .11 | 0 | 0 |
| 3 | 0 | .05 | 0 | .02 | .08 | .01 | .01 | 0 | .08 | .12 | 0 | 0 |
| 4 | 0 | .07 | 11.9 | .01 | .01 | .01 | .01 | 0 | .07 | .12 | .03 | 0 |
| 5 | 0 | .04 | .08 | .01 | .03 | .03 | .42 | 0 | .07 | .10 | .05 | 0 |
| 6 | 0 | 0 | .02 | .01 | .02 | .02 | 23.5 | .01 | .09 | .09 | .01 | 0 |
| 7 | 0 | 0 | .78 | .01 | 0 | .01 | 1.51 | .01 | .07 | .08 | .05 | 0 |
| 8 | 0 | .01 | .65 | 0 | 0 | .01 | 4.14 | .03 | .07 | .10 | .07 | 0 |
| 9 | 0 | .03 | 0 | 0 | .03 | .01 | 2.30 | .03 | .07 | .11 | .07 | 0 |
| 10 | 0 | 0 | .01 | .01 | 0 | 1.13 | 1.19 | .05 | .05 | .10 | 0 | 0 |
| 11 | .57 | .03 | 0 | .01 | .01 | .02 | .13 | .07 | .08 | .09 | .06 | 0 |
| 12 | .31 | .01 | 0 | .01 | 0 | 11.3 | .64 | .06 | .07 | .10 | .02 | 0 |
| 13 | .12 | .04 | .03 | .01 | .04 | 3.15 | .15 | .07 | .07 | .10 | .07 | 0 |
| 14 | .07 | .01 | 0 | 0 | 0 | .21 | .04 | .07 | .07 | .09 | .07 | 0 |
| 15 | .05 | .05 | 0 | .02 | .04 | .34 | .01 | .05 | .07 | .09 | .07 | 0 |
| 16 | 0 | 0 | 0 | .13 | 0 | 6.90 | .01 | .04 | .08 | .10 | .01 | .01 |
| 17 | 0 | 0 | 0 | .26 | 0 | .05 | .01 | .07 | .10 | .18 | .05 | 0 |
| 18 | 0 | .02 | .01 | 0 | 0 | .01 | .01 | .44 | .09 | .12 | .07 | 0 |
| 19 | 0 | .02 | .01 | 0 | 0 | 1.02 | .01 | .03 | .08 | .13 | .06 | 0 |
| 20 | 0 | 5.36 | .05 | 0 | .02 | .16 | .01 | .05 | .09 | .14 | .02 | 0 |
| 21 | 0 | 0 | .04 | 0 | 0 | .02 | .01 | .08 | .10 | .11 | .06 | 0 |
| 22 | .01 | 0 | .11 | 0 | .41 | 2.12 | .01 | .07 | .10 | .15 | .04 | 0 |
| 23 | 0 | 0 | 6.34 | .01 | .03 | 3.83 | 0 | .07 | .10 | .11 | 0 | .01 |
| 24 | .01 | 0 | .03 | 0 | .01 | .01 | .03 | .07 | .10 | .11 | .03 | 0 |
| 25 | .04 | 0 | 2.65 | .01 | .01 | .01 | .06 | .07 | .10 | .19 | 0 | .01 |
| 26 | 0 | 0 | 24.3 | .01 | .01 | .01 | 0 | .07 | .08 | .07 | 0 | .01 |
| 27 | 0 | 2.77 | .05 | 0 | .01 | .01 | 0 | .06 | .08 | .01 | 0 | 0 |
| 28 | .05 | 12.4 | .01 | 0 | .01 | .11 | 0 | .12 | .10 | .06 | 0 | .01 |
| 29 | .04 | .16 | .01 | .01 | .02 | .07 | .02 | .07 | .17 | .03 | 0 | .02 |
| 30 | .07 | 0 | .01 | 0 | ------ | .01 | .02 | .14 | .10 | 0 | 0 | .01 |
| 31 | .06 | ------ | .01 | 0 | ------ | .01 | ------ | .07 | ------ | 0 | 0 | ------ |
| Total | 1.41 | 21.22 | 47.14 | 0.57 | 0.83 | 30.83 | 34.27 | 1.97 | 2.54 | 3.00 | 0.91 | 0.08 |
| Mean | .045 | .71 | 1.52 | .018 | .029 | .99 | 1.14 | .064 | .085 | .097 | .029 | .003 |
| Max | .57 | 12.4 | 24.3 | .26 | .41 | 11.3 | 23.5 | .44 | .17 | .19 | .07 | .02 |
| Min | 0 | 0 | 0 | 0 | 0 | .01 | 0 | 0 | .05 | 0 | 0 | 0 |
| Acre-Ft | 2.8 | 42 | 94 | 1.1 | 1.6 | 61 | 68 | 3.9 | 5.0 | 6.0 | 1.8 | .16 |

| | | | | | | | | | | | | |
|---|---|---|---|---|---|---|---|---|---|---|---|---|
| Wtr Year 2020 | Total | 144.77 | Mean | .40 | Max | 24.3 | Min | 0 | Inst Max | 413 | Acre-Ft | 287 |
| Cal Year 2019 | Total | 570.75 | Mean | 1.56 | Max | 61.5 | Min | 0 | Inst Max | 282 | Acre-Ft | 1130 |

# RUNOFF – DAILY DISCHARGE

Los Angeles County Dept of Public Works USDAY V115 Output 04/20/2021

Summary Report

Site: F342 Branford Street Channel Below Sharp Avenue
USGS #:
Beginning Date: 10/01/2019
Ending Date: 09/30/2020

Daily Mean Discharge in Cubic feet/second Water Year Oct 2019 to Sep 2020

| Day | OCT | NOV | DEC | JAN | FEB | MAR | APR | MAY | JUN | JUL | AUG | SEP |
|---|---|---|---|---|---|---|---|---|---|---|---|---|
| 1 | .05 | .06 | .10 | .05 | .07 | .06 | .05 | .06 | .05 | .06 | .07 | .07 |
| 2 | .05 | .05 | .06 | .05 | .10 | .09 | .05 | .09 | .05 | .07 | .06 | .06 |
| 3 | .05 | .06 | .05 | .05 | .05 | .10 | .05 | .07 | .05 | .08 | .07 | .08 |
| 4 | .07 | .07 | 27.8 | .05 | .07 | .09 | .05 | .06 | .06 | .08 | .06 | .08 |
| 5 | .05 | .05 | .07 | .05 | .05 | .05 | 7.79 | .06 | .06 | .07 | .06 | .07 |
| 6 | .06 | .07 | .41 | .05 | .05 | .08 | 72.3 | .05 | .05 | .06 | .05 | .07 |
| 7 | .06 | .05 | 1.93 | .05 | .06 | .05 | 49.3 | .06 | .06 | .08 | .05 | .05 |
| 8 | .05 | .07 | 15.5 | .05 | .05 | .05 | 2.10 | .05 | .06 | .07 | .05 | .05 |
| 9 | .09 | .05 | .08 | .05 | .07 | .05 | 16.4 | .06 | .05 | .07 | .05 | .07 |
| 10 | .05 | .06 | .05 | .05 | .06 | 2.47 | 6.09 | .08 | .07 | .07 | .07 | .05 |
| 11 | .05 | .12 | .05 | .05 | .05 | .15 | .12 | .08 | .08 | .06 | .08 | .06 |
| 12 | .05 | .12 | .05 | .05 | .06 | 54.9 | .63 | .10 | .06 | .08 | .08 | .05 |
| 13 | .06 | .06 | .09 | .05 | .06 | 25.7 | .20 | .06 | .07 | .08 | .08 | .06 |
| 14 | .07 | .05 | .05 | .05 | .07 | 3.01 | .10 | .07 | .06 | .08 | .07 | .06 |
| 15 | .05 | .06 | .05 | .05 | .05 | 3.68 | .05 | .05 | .06 | .06 | .07 | .07 |
| 16 | .06 | .05 | .05 | .37 | .06 | 26.8 | .05 | .06 | .07 | .06 | .06 | .07 |
| 17 | .05 | .05 | .05 | 3.40 | .07 | .57 | .05 | .07 | .07 | .06 | .06 | .11 |
| 18 | .07 | .05 | .05 | .05 | .05 | .07 | .05 | 5.46 | .07 | .06 | .07 | .08 |
| 19 | .05 | .05 | .05 | .05 | .06 | 1.46 | .05 | .06 | .06 | .07 | .07 | .08 |
| 20 | .05 | .35 | .05 | .05 | .05 | .07 | .05 | .05 | .07 | .06 | .07 | .07 |
| 21 | .06 | .06 | .05 | .05 | .05 | .05 | .05 | .06 | .06 | .07 | .07 | .07 |
| 22 | .05 | .06 | 7.34 | .06 | .06 | 29.0 | .05 | .05 | .05 | .07 | .07 | .08 |
| 23 | .06 | .05 | 17.7 | .05 | .06 | 1.36 | .05 | .05 | .06 | .07 | .07 | .08 |
| 24 | .05 | .05 | .06 | .05 | .05 | .06 | .05 | .07 | .06 | .06 | .07 | .10 |
| 25 | .06 | .05 | 19.8 | .05 | .05 | .13 | .07 | .05 | .07 | .07 | .07 | .27 |
| 26 | .06 | .05 | 48.2 | .05 | .05 | .05 | .05 | .06 | .07 | .07 | .07 | .14 |
| 27 | .10 | 14.3 | .06 | .05 | .08 | .05 | .05 | .06 | .07 | .06 | .08 | .13 |
| 28 | .06 | 37.0 | .05 | .05 | .05 | .05 | .06 | .06 | .07 | .07 | .08 | .14 |
| 29 | .08 | .43 | .05 | .05 | .05 | .05 | .06 | .06 | .08 | .07 | .08 | .07 |
| 30 | .05 | .30 | .05 | .05 | ------ | .05 | .06 | .07 | .06 | .06 | .08 | .06 |
| 31 | .05 | ------ | .05 | .05 | ------ | .05 | ------ | .05 | ------ | .07 | .08 | ------ |
| Total | 1.82 | 53.90 | 140.00 | 5.23 | 1.71 | 150.40 | 156.08 | 7.34 | 1.88 | 2.12 | 2.12 | 2.50 |
| Mean | .059 | 1.80 | 4.52 | .17 | .059 | 4.85 | 5.20 | .24 | .063 | .068 | .068 | .083 |
| Max | .10 | 37.0 | 48.2 | 3.40 | .10 | 54.9 | 72.3 | 5.46 | .08 | .08 | .08 | .27 |
| Min | .05 | .05 | .05 | .05 | .05 | .05 | .05 | .05 | .05 | .06 | .05 | .05 |
| Acre-Ft | 3.6 | 107 | 278 | 10 | 3.4 | 298 | 310 | 15 | 3.7 | 4.2 | 4.2 | 5.0 |

| | | | | | | | | | | | | |
|---|---|---|---|---|---|---|---|---|---|---|---|---|
| Wtr Year 2020 | Total | 525.10 | Mean | 1.43 | Max | 72.3 | Min | .05 | Inst Max | 841 | Acre-Ft | 1040 |
| Cal Year 2019 | Total | 741.05 | Mean | 2.03 | Max | 97.7 | Min | .05 | Inst Max | 1070 | Acre-Ft | 1470 |

# RUNOFF – DAILY DISCHARGE

Los Angeles County Dept of Public Works USDAY V115 Output 04/20/2021

Summary Report

Site: E285 Burbank-Western Storm Drain
USGS #:
Beginning Date: 10/01/2019
Ending Date: 09/30/2020

Daily Mean Discharge in Cubic feet/second Water Year Oct 2019 to Sep 2020

| Day | OCT | NOV | DEC | JAN | FEB | MAR | APR | MAY | JUN | JUL | AUG | SEP |
|---|---|---|---|---|---|---|---|---|---|---|---|---|
| 1 | 3.32 | 0 | 34.5 | 10.8 | 9.63 | 12.9 | 13.0 | 8.00 | 4.42 | 5.53 | 0 | 9.05 |
| 2 | 3.29 | .74 | 8.38 | 11.0 | 9.94 | 11.5 | 11.4 | 7.55 | 4.71 | 5.53 | 0 | 9.05 |
| 3 | 3.97 | 2.45 | 8.46 | 11.2 | 10.2 | 10.8 | 9.98 | 7.04 | 4.25 | 5.53 | 0 | 9.05 |
| 4 | 4.03 | 3.73 | 381 | 12.3 | 9.88 | 10.2 | 9.40 | 7.00 | 4.76 | 5.53 | 0 | 9.65 |
| 5 | 4.10 | 3.85 | 77.4 | 12.8 | 9.55 | 9.59 | 10.9 | 6.45 | 4.97 | 5.53 | 0 | 10.2 |
| 6 | 4.17 | 3.76 | 53.9 | 14.0 | 9.21 | 9.00 | 245 | 6.35 | 5.09 | 5.14 | .26 | 10.2 |
| 7 | 4.25 | 3.67 | 83.8 | 14.4 | 8.88 | 8.42 | 251 | 6.32 | 4.63 | 4.74 | 1.05 | 10.2 |
| 8 | 4.32 | 3.60 | 257 | 13.1 | 8.55 | 7.88 | 120 | 5.61 | 4.53 | 4.74 | 1.98 | 10.2 |
| 9 | 4.40 | 4.36 | 72.4 | 11.9 | 39.8 | 7.47 | 127 | 5.64 | 4.25 | 4.74 | 2.77 | 9.65 |
| 10 | 4.82 | 4.97 | 43.9 | 10.3 | 63.6 | 7.39 | 123 | 5.67 | 3.97 | 4.74 | 3.95 | 9.05 |
| 11 | 4.55 | 4.88 | 30.3 | 8.93 | 52.6 | 7.46 | 93.1 | 5.69 | 4.08 | 4.74 | 5.14 | 9.05 |
| 12 | 3.99 | 4.79 | 14.2 | 8.09 | 43.4 | 227 | 72.4 | 5.72 | 4.20 | 4.74 | 5.93 | 9.65 |
| 13 | 3.51 | 4.70 | 8.44 | 7.05 | 37.2 | 133 | 58.4 | 5.75 | 4.31 | 4.74 | 6.32 | 10.2 |
| 14 | 3.19 | 5.33 | 6.24 | 6.49 | 32.4 | 12.6 | 46.6 | 5.78 | 4.43 | 4.74 | 6.72 | 10.2 |
| 15 | 3.18 | 5.30 | 4.53 | 6.38 | 28.1 | 7.55 | 37.2 | 5.11 | 4.54 | 4.74 | 7.11 | 10.2 |
| 16 | 2.55 | 5.40 | 3.75 | 6.59 | 24.1 | 108 | 30.0 | 5.17 | 4.66 | 4.74 | 7.11 | 10.2 |
| 17 | 1.98 | 5.91 | 3.88 | 10.9 | 21.7 | 50.3 | 24.8 | 5.20 | 4.37 | 4.35 | 7.11 | 9.65 |
| 18 | 1.28 | 5.82 | 3.75 | 11.3 | 19.1 | 12.6 | 21.3 | 6.87 | 4.09 | 3.16 | 7.51 | 9.65 |
| 19 | .52 | 5.73 | 3.43 | 10.9 | 17.1 | 6.55 | 18.7 | 7.93 | 4.21 | 2.37 | 7.90 | 10.2 |
| 20 | .35 | 6.47 | 2.38 | 10.7 | 15.7 | 6.11 | 17.3 | 6.88 | 4.32 | 2.37 | 7.90 | 10.2 |
| 21 | 0 | 7.13 | 1.81 | 11.0 | 15.3 | 7.42 | 16.0 | 6.20 | 4.44 | 1.98 | 7.90 | 10.2 |
| 22 | 0 | 7.11 | 5.49 | 10.4 | 14.9 | 110 | 14.4 | 5.99 | 4.55 | 1.19 | 7.90 | 10.2 |
| 23 | 5.28 | 7.11 | 357 | 10.4 | 14.5 | 70.9 | 13.0 | 6.02 | 4.67 | .40 | 7.90 | 10.9 |
| 24 | 4.78 | 7.11 | 36.3 | 9.79 | 14.1 | 27.6 | 12.2 | 6.05 | 4.78 | 0 | 7.90 | 11.5 |
| 25 | 4.49 | 7.70 | 3.97 | 9.85 | 13.9 | 13.5 | 11.4 | 6.08 | 4.90 | 0 | 7.90 | 11.5 |
| 26 | 3.94 | 7.90 | 405 | 9.46 | 13.7 | 10.7 | 10.9 | 6.10 | 5.01 | 0 | 8.47 | 11.5 |
| 27 | 3.36 | 136 | 35.5 | 9.28 | 13.5 | 9.55 | 9.99 | 6.13 | 5.13 | 0 | 9.05 | 11.5 |
| 28 | 2.93 | 207 | 18.8 | 9.58 | 13.3 | 9.08 | 9.16 | 5.55 | 5.24 | 0 | 8.47 | 11.5 |
| 29 | 2.06 | 143 | 13.9 | 9.90 | 13.1 | 10.3 | 9.16 | 5.39 | 5.36 | 0 | 8.47 | 12.1 |
| 30 | 2.38 | 108 | 11.1 | 9.47 | ------ | 12.0 | 8.70 | 4.72 | 5.47 | 0 | 9.05 | 12.8 |
| 31 | 4.74 | ------ | 11.0 | 9.32 | ------ | 13.2 | ------ | 4.66 | ------ | 0 | 9.05 | ------ |
| Total | 99.73 | 723.52 | 2001.51 | 317.58 | 596.94 | 960.57 | 1455.39 | 188.62 | 138.34 | 96.01 | 170.82 | 309.20 |
| Mean | 3.22 | 24.1 | 64.6 | 10.2 | 20.6 | 31.0 | 48.5 | 6.08 | 4.61 | 3.10 | 5.51 | 10.3 |
| Max | 5.28 | 207 | 405 | 14.4 | 63.6 | 227 | 251 | 8.00 | 5.47 | 5.53 | 9.05 | 12.8 |
| Min | 0 | 0 | 1.81 | 6.38 | 8.55 | 6.11 | 8.70 | 4.66 | 3.97 | 0 | 0 | 9.05 |
| Acre-Ft | 198 | 1440 | 3970 | 630 | 1180 | 1910 | 2890 | 374 | 274 | 190 | 339 | 613 |

| | | | | | | | | | | | | |
|---|---|---|---|---|---|---|---|---|---|---|---|---|
| Wtr Year 2020 | Total | 7058.23 | Mean | 19.3 | Max | 405 | Min | 0 | Inst Max | 2000 | Acre-Ft | 14000 |
| Cal Year 2019 | Total | 8349.59 | Mean | 22.9 | Max | 514 | Min | 0 | Inst Max | 6470 | Acre-Ft | 16560 |

# RUNOFF – DAILY DISCHARGE

Los Angeles County Dept of Public Works USDAY V115 Output 04/20/2021

Summary Report

Site: F37B Compton Creek near Greenleaf Drive
USGS #:
Beginning Date: 10/01/2019
Ending Date: 09/30/2020

Daily Mean Discharge in Cubic feet/second Water Year Oct 2019 to Sep 2020

| Day | OCT | NOV | DEC | JAN | FEB | MAR | APR | MAY | JUN | JUL | AUG | SEP |
|---|---|---|---|---|---|---|---|---|---|---|---|---|
| 1 | 1.09 | 2.08 | 3.22 | .61 | .78 | .54 | .09 | .82 | .54 | .62 | .42 | .59 |
| 2 | 1.07 | 2.08 | 3.04 | .55 | .70 | .54 | .43 | .91 | .54 | .69 | .45 | .77 |
| 3 | .87 | 2.08 | 3.90 | .57 | .60 | .54 | .43 | .86 | .49 | .66 | .64 | .89 |
| 4 | .85 | 2.25 | 127 | .54 | 1.73 | .67 | .39 | .89 | .56 | .54 | 1.11 | .86 |
| 5 | .83 | 2.74 | 4.70 | .50 | 1.24 | .54 | .34 | .64 | .66 | .62 | 2.08 | .70 |
| 6 | .81 | 3.09 | 2.39 | .73 | 1.26 | .54 | 63.0 | .32 | .69 | .53 | 2.08 | .71 |
| 7 | .78 | 3.13 | 3.42 | .65 | 1.27 | .54 | 61.5 | .32 | .54 | .48 | 1.64 | .71 |
| 8 | .76 | 3.05 | 20.9 | .72 | 1.52 | .54 | 10.5 | .13 | .42 | .47 | .70 | .88 |
| 9 | .74 | 3.05 | 3.00 | .87 | 2.05 | .54 | 79.7 | .21 | .61 | .46 | .69 | .84 |
| 10 | .73 | 2.77 | 1.42 | 2.00 | 2.02 | 28.0 | 45.5 | .47 | .48 | .36 | .54 | .80 |
| 11 | .76 | 2.97 | 1.05 | 1.45 | 1.46 | 2.06 | .49 | .51 | .54 | .42 | .53 | .66 |
| 12 | .81 | 3.13 | .89 | 1.36 | 1.17 | 85.0 | .22 | .54 | .66 | .73 | .57 | .56 |
| 13 | .85 | 3.13 | .92 | 1.28 | 1.17 | 84.6 | .52 | .60 | .70 | .73 | .68 | .63 |
| 14 | .75 | 3.13 | .90 | 1.19 | 2.51 | 15.8 | .49 | .63 | .64 | .99 | .63 | .47 |
| 15 | .76 | 3.13 | .82 | 1.21 | 1.65 | 10.8 | .05 | .93 | .72 | .58 | .63 | .54 |
| 16 | .80 | 3.13 | .69 | 1.34 | 2.39 | 45.4 | 0 | .95 | .73 | .58 | .72 | .54 |
| 17 | .91 | 2.97 | .35 | 33.3 | 1.84 | 4.61 | 0 | 1.17 | 1.11 | .76 | .83 | .38 |
| 18 | 1.00 | 2.77 | 0 | 1.26 | 1.58 | .30 | 0 | 2.91 | .98 | .61 | .67 | .36 |
| 19 | .95 | 2.77 | 0 | .90 | 1.75 | .39 | .14 | 2.42 | .72 | .51 | .54 | .40 |
| 20 | 1.18 | 37.4 | 0 | .90 | 1.50 | .69 | .04 | 1.48 | 1.01 | .47 | .54 | .49 |
| 21 | 1.15 | 6.12 | .49 | 1.18 | 1.44 | .65 | .02 | 1.09 | .92 | .47 | .54 | .54 |
| 22 | 1.32 | 2.07 | 4.09 | 1.08 | 41.2 | 65.3 | .08 | 1.07 | .69 | .69 | .51 | .42 |
| 23 | 2.25 | 1.45 | 136 | .76 | 1.51 | 35.9 | .16 | .90 | .60 | .66 | .52 | .51 |
| 24 | 2.91 | 1.45 | 4.41 | .91 | .63 | 1.30 | .25 | .90 | .82 | .54 | .66 | .49 |
| 25 | 3.00 | 1.45 | 21.4 | .90 | .70 | .49 | .33 | .90 | .62 | .62 | .72 | .59 |
| 26 | 2.70 | .73 | 87.8 | .90 | .63 | .22 | .41 | 1.19 | .58 | .56 | .83 | .36 |
| 27 | 2.13 | 32.2 | 2.52 | .69 | .58 | .18 | .49 | 1.19 | .80 | .62 | .57 | .34 |
| 28 | 2.21 | 109 | 1.42 | 1.07 | .72 | .01 | .57 | .42 | .54 | .63 | .59 | .25 |
| 29 | 2.29 | 12.4 | .88 | 1.66 | .65 | 0 | .66 | .74 | .67 | .58 | .67 | .28 |
| 30 | 2.37 | 4.59 | .72 | 1.13 | ------ | .01 | .74 | .82 | .61 | .51 | .52 | .20 |
| 31 | 2.26 | ------ | .72 | 1.02 | ------ | .01 | ------ | .58 | ------ | .39 | .51 | ------ |
| Total | 41.89 | 262.31 | 439.06 | 63.23 | 78.25 | 386.71 | 267.54 | 27.51 | 20.19 | 18.08 | 23.33 | 16.76 |
| Mean | 1.35 | 8.74 | 14.2 | 2.04 | 2.70 | 12.5 | 8.92 | .89 | .67 | .58 | .75 | .56 |
| Max | 3.00 | 109 | 136 | 33.3 | 41.2 | 85.0 | 79.7 | 2.91 | 1.11 | .99 | 2.08 | .89 |
| Min | .73 | .73 | 0 | .50 | .58 | 0 | 0 | .13 | .42 | .36 | .42 | .20 |
| Acre-Ft | 83 | 520 | 871 | 125 | 155 | 767 | 531 | 55 | 40 | 36 | 46 | 33 |

| | | | | | | | | | | | | |
|---|---|---|---|---|---|---|---|---|---|---|---|---|
| Wtr Year 2020 | Total | 1644.86 | Mean | 4.49 | Max | 136 | Min | 0 | Inst Max | 398 | Acre-Ft | 3260 |
| Cal Year 2019 | Total | 2893.57 | Mean | 7.93 | Max | 208 | Min | 0 | Inst Max | 2270 | Acre-Ft | 5740 |

# RUNOFF – DAILY DISCHARGE

Los Angeles County Dept of Public Works USDAY V115 Output 04/20/2021

Summary Report

Site: F354 Coyote Creek Below Spring Street
USGS #:
Beginning Date: 10/01/2019
Ending Date: 09/30/2020

Daily Mean Discharge in Cubic feet/second Water Year Oct 2019 to Sep 2020

| Day | OCT | NOV | DEC | JAN | FEB | MAR | APR | MAY | JUN | JUL | AUG | SEP |
|---|---|---|---|---|---|---|---|---|---|---|---|---|
| 1 | 8.11 | 11.7 | 14.9 | 16.6 | 21.1 | 42.2 | 98.9 | 11.2 | 23.7 | 47.2 | 4.08 | 2.56 |
| 2 | 7.36 | 10.5 | 12.6 | 18.5 | 21.7 | 44.7 | 47.6 | 18.0 | 26.5 | 21.1 | 3.75 | 2.42 |
| 3 | 4.18 | 10.7 | 11.4 | 22.4 | 27.2 | 48.7 | 8.88 | 12.7 | 25.5 | 14.5 | 4.80 | 2.48 |
| 4 | 4.39 | 12.0 | 999 | 16.1 | 41.7 | 51.5 | 12.3 | 13.0 | 12.4 | 16.3 | 10.0 | 3.04 |
| 5 | 3.98 | 8.04 | 56.7 | 17.3 | 41.4 | 56.5 | 43.7 | 5.10 | 7.18 | 7.32 | 7.69 | 2.48 |
| 6 | 3.89 | 7.66 | 80.4 | 12.7 | 21.5 | 63.9 | 727 | 8.74 | 15.7 | 15.8 | 5.11 | 2.32 |
| 7 | 4.12 | 7.48 | 45.9 | 15.3 | 14.1 | 70.7 | 386 | 7.62 | 17.8 | 14.9 | 5.50 | 2.26 |
| 8 | 2.38 | 7.96 | 171 | 19.9 | 14.2 | 74.6 | 214 | 7.65 | 16.8 | 55.2 | 5.35 | 2.69 |
| 9 | 3.35 | 5.83 | 30.5 | 14.0 | 84.1 | 72.8 | 712 | 5.83 | 10.8 | 90.0 | 5.33 | 3.01 |
| 10 | 10.0 | 9.58 | 9.95 | 11.8 | 23.9 | 377 | 409 | 11.5 | 5.58 | 75.6 | 5.02 | 2.31 |
| 11 | 12.9 | 10.9 | 11.6 | 13.8 | 23.8 | 93.0 | 59.4 | 7.61 | 3.61 | 44.6 | 4.68 | 1.99 |
| 12 | 13.2 | 7.67 | 12.9 | 11.5 | 22.2 | 1330 | 28.0 | 7.56 | 2.83 | 43.3 | 4.70 | 1.84 |
| 13 | 12.8 | 7.07 | 7.19 | 16.5 | 26.7 | 893 | 47.1 | 12.8 | 2.94 | 46.7 | 4.58 | 1.65 |
| 14 | 11.0 | 6.43 | 11.7 | 21.8 | 29.8 | 120 | 39.7 | 26.1 | 3.21 | 105 | 4.87 | 1.72 |
| 15 | 9.60 | 7.82 | 15.5 | 18.0 | 40.1 | 224 | 51.5 | 25.2 | 8.60 | 130 | 4.49 | 1.86 |
| 16 | 10.1 | 6.08 | 10.4 | 22.1 | 48.7 | 699 | 30.7 | 20.2 | 5.36 | 75.3 | 4.55 | 1.70 |
| 17 | 7.21 | 6.87 | 9.52 | 164 | 64.1 | 262 | 40.5 | 28.6 | 3.62 | 53.5 | 4.37 | 2.52 |
| 18 | 5.64 | 5.49 | 7.37 | 10.8 | 84.6 | 83.4 | 39.5 | 67.5 | 12.2 | 81.4 | 4.66 | 1.98 |
| 19 | 5.38 | 6.46 | 7.87 | 7.84 | 116 | 206 | 55.8 | 22.0 | 20.2 | 59.3 | 3.17 | 1.76 |
| 20 | 5.03 | 113 | 8.21 | 8.42 | 106 | 157 | 27.3 | 12.7 | 27.6 | 69.6 | 2.83 | 1.73 |
| 21 | 5.36 | 18.2 | 10.8 | 27.3 | 58.3 | 78.3 | 18.2 | 11.9 | 28.4 | 79.2 | 2.47 | 1.80 |
| 22 | 6.67 | 6.66 | 7.30 | 9.21 | 435 | 524 | 30.9 | 14.2 | 36.4 | 54.7 | 2.22 | 1.73 |
| 23 | 10.8 | 4.14 | 1140 | 9.81 | 118 | 721 | 40.2 | 14.6 | 19.1 | 72.0 | 2.09 | 1.66 |
| 24 | 4.96 | 4.26 | 50.2 | 10.3 | 91.2 | 106 | 49.2 | 13.6 | 23.6 | 57.7 | 2.93 | 1.84 |
| 25 | 4.91 | 4.61 | 85.0 | 12.0 | 105 | 103 | 79.1 | 13.3 | 27.0 | 49.0 | 4.98 | 1.81 |
| 26 | 4.94 | 5.98 | 2920 | 16.2 | 91.0 | 111 | 77.6 | 11.5 | 16.8 | 31.0 | 4.04 | 1.51 |
| 27 | 5.15 | 231 | 66.0 | 15.1 | 50.8 | 81.7 | 74.9 | 6.47 | 33.1 | 16.6 | 2.37 | 1.63 |
| 28 | 5.52 | 1690 | 29.8 | 20.1 | 38.0 | 95.2 | 104 | 11.9 | 39.9 | 23.2 | 2.25 | 3.67 |
| 29 | 5.13 | 140 | 25.5 | 14.8 | 40.5 | 98.6 | 39.8 | 17.5 | 46.4 | 42.0 | 2.43 | 5.88 |
| 30 | 5.34 | 51.7 | 21.3 | 14.9 | ------ | 110 | 16.4 | 14.5 | 52.0 | 17.4 | 2.20 | 5.63 |
| 31 | 8.09 | ------ | 15.8 | 18.6 | ------ | 108 | ------ | 20.4 | ------ | 4.60 | 2.52 | ------ |
| Total | 211.49 | 2425.79 | 5906.31 | 627.68 | 1900.7 | 7106.8 | 3609.18 | 481.48 | 574.83 | 1514.02 | 130.03 | 71.48 |
| Mean | 6.82 | 80.9 | 191 | 20.2 | 65.5 | 229 | 120 | 15.5 | 19.2 | 48.8 | 4.19 | 2.38 |
| Max | 13.2 | 1690 | 2920 | 164 | 435 | 1330 | 727 | 67.5 | 52.0 | 130 | 10.0 | 5.88 |
| Min | 2.38 | 4.14 | 7.19 | 7.84 | 14.1 | 42.2 | 8.88 | 5.10 | 2.83 | 4.60 | 2.09 | 1.51 |
| Acre-Ft | 419 | 4810 | 11710 | 1240 | 3770 | 14100 | 7160 | 955 | 1140 | 3000 | 258 | 142 |

| | | | | | | | | | | | | |
|---|---|---|---|---|---|---|---|---|---|---|---|---|
| Wtr Year 2020 | Total | 24559.79 | Mean | 67.1 | Max | 2920 | Min | 1.51 | Inst Max | 12700 | Acre-Ft | 48710 |
| Cal Year 2019 | Total | 28237.90 | Mean | 77.4 | Max | 4380 | Min | .43 | Inst Max | 14200 | Acre-Ft | 56010 |

# RUNOFF – DAILY DISCHARGE

Los Angeles County Dept of Public Works USDAY V115 Output 04/20/2021

Summary Report

Site: F274B Dalton Wash at Merced Avenue
USGS #:
Beginning Date: 10/01/2019
Ending Date: 09/30/2020

Daily Mean Discharge in Cubic feet/second Water Year Oct 2019 to Sep 2020

| Day | OCT | NOV | DEC | JAN | FEB | MAR | APR | MAY | JUN | JUL | AUG | SEP |
|---|---|---|---|---|---|---|---|---|---|---|---|---|
| 1 | .10 | .14 | 3.23 | .11 | 1.64 | 2.35 | 1.59 | 2.08 | 1.58 | 1.36 | 4.06 | .17 |
| 2 | .11 | .17 | 4.21 | .11 | 1.18 | 1.95 | .49 | 1.28 | .47 | 1.19 | 2.36 | .19 |
| 3 | .11 | .14 | 3.54 | .11 | 2.56 | 1.75 | .58 | 1.22 | .10 | 1.12 | 1.93 | .19 |
| 4 | .12 | .18 | 227 | .11 | .57 | 1.68 | 1.34 | .73 | .08 | .99 | 1.13 | .16 |
| 5 | .11 | .18 | 5.46 | .12 | .36 | 1.63 | 3.86 | .65 | .11 | 1.01 | .99 | .73 |
| 6 | .11 | .16 | 5.95 | .12 | .12 | 1.77 | 156 | .62 | .12 | .83 | 1.13 | .21 |
| 7 | .12 | .18 | 21.5 | .35 | .18 | 1.41 | 20.7 | .63 | .08 | 1.13 | 1.72 | .29 |
| 8 | .11 | .11 | 9.24 | .77 | .28 | 1.13 | 26.5 | .57 | 1.27 | 1.00 | 1.81 | .32 |
| 9 | .11 | .09 | 1.71 | 2.21 | 4.86 | 1.16 | 43.0 | .60 | 2.58 | 1.17 | 1.63 | .31 |
| 10 | .09 | .08 | .24 | .90 | .83 | 27.6 | 18.2 | .48 | 1.55 | 1.14 | 2.01 | .32 |
| 11 | .09 | .09 | .12 | 1.57 | .43 | 2.16 | 2.73 | .58 | 1.98 | .93 | 1.89 | .52 |
| 12 | .09 | .10 | .14 | .56 | 1.19 | 210 | 12.9 | .62 | 2.09 | .83 | 3.62 | .32 |
| 13 | .09 | .09 | .13 | 1.26 | 1.57 | 100 | 7.98 | .74 | 2.38 | .87 | 3.60 | .28 |
| 14 | .11 | .08 | .10 | 2.73 | .75 | 4.35 | .98 | .65 | 1.76 | 1.65 | 1.16 | .36 |
| 15 | .12 | .09 | .08 | 1.71 | .81 | 12.0 | .96 | 1.60 | 1.94 | 1.70 | 1.14 | .34 |
| 16 | .09 | .08 | .09 | 2.68 | 1.40 | 65.0 | .84 | 2.85 | 2.01 | 1.60 | 1.62 | .24 |
| 17 | 2.45 | .08 | .10 | 8.31 | 1.82 | 4.43 | 1.46 | 1.97 | 1.63 | 1.60 | 2.11 | .25 |
| 18 | 4.69 | .08 | .13 | 1.46 | 2.21 | 1.67 | 1.00 | 23.5 | 1.82 | 1.51 | 2.27 | .21 |
| 19 | .17 | .38 | .17 | 1.24 | 1.89 | 57.1 | .74 | 2.59 | 1.90 | 1.16 | 1.42 | .22 |
| 20 | .13 | 170 | .69 | 1.18 | 1.41 | 6.69 | .99 | 2.89 | 1.88 | 1.19 | 1.13 | .18 |
| 21 | .20 | 1.55 | .53 | 1.51 | .72 | .69 | 1.45 | 5.14 | 1.45 | 1.25 | 1.09 | .27 |
| 22 | .22 | .11 | .75 | 2.43 | 11.4 | 68.8 | 1.98 | 1.98 | 1.77 | 1.10 | .92 | .39 |
| 23 | .13 | .09 | 83.2 | 1.79 | 1.56 | 9.57 | 1.47 | 1.98 | 1.55 | .93 | 1.61 | .35 |
| 24 | .17 | .08 | 3.96 | .85 | .88 | .94 | 1.87 | 2.71 | 2.03 | .83 | 1.96 | .87 |
| 25 | .14 | .10 | 35.8 | .38 | .89 | .65 | 2.54 | 2.61 | 1.92 | .80 | .43 | 1.80 |
| 26 | .14 | .23 | 527 | .28 | 1.65 | .57 | 1.06 | 2.36 | 1.97 | 1.24 | .16 | 1.57 |
| 27 | .12 | 69.2 | 2.60 | .93 | 2.01 | .94 | 1.78 | .86 | .89 | 2.17 | .22 | 1.51 |
| 28 | .19 | 160 | 1.94 | 2.50 | 1.94 | .69 | 2.40 | | 1.29 | 2.38 | .68 | 3.70 |
| 29 | .21 | 21.2 | 1.21 | 1.66 | 1.50 | .75 | 1.62 | 1.55 | 3.45 | 2.31 | .19 | 4.71 |
| 30 | .14 | 1.91 | .56 | 1.11 | ------ | .86 | 1.48 | 1.42 | 1.95 | 2.09 | .14 | .41 |
| 31 | .13 | ------ | .15 | 1.48 | ------ | 1.02 | ------ | 1.58 | ------ | 2.07 | .18 | ------ |
| Total | 10.91 | 426.97 | 941.53 | 42.53 | 48.61 | 591.31 | 320.49 | 69.04 | 45.60 | 41.15 | 46.31 | 21.39 |
| Mean | .35 | 14.2 | 30.4 | 1.37 | 1.68 | 19.1 | 10.7 | 2.30 | 1.52 | 1.33 | 1.49 | .71 |
| Max | 4.69 | 170 | 527 | 8.31 | 11.4 | 210 | 156 | 23.5 | 3.45 | 2.38 | 4.06 | 4.71 |
| Min | .09 | .08 | .08 | .11 | .12 | .57 | .49 | .48 | .08 | .80 | .14 | .16 |
| Acre-Ft | 22 | 847 | 1870 | 84 | 96 | 1170 | 636 | 137 | 90 | 82 | 92 | 42 |

| | | | | | | | | | | | | |
|---|---|---|---|---|---|---|---|---|---|---|---|---|
| Wtr Year 2020 | Total | 2605.84 | Mean | 7.14 | Max | 527 | Min | .08 | Inst Max | 3910 | Acre-Ft | 5170 |
| Cal Year 2019 | Total | 5481.70 | Mean | 15.0 | Max | 686 | Min | .06 | Inst Max | 5040 | Acre-Ft | 10870 |

# RUNOFF – DAILY DISCHARGE

Los Angeles County Dept of Public Works USDAY V115 Output 04/20/2021

Summary Report

Site: F318 Eaton Wash at Loftus Drive
USGS #:
Beginning Date: 10/01/2019
Ending Date: 09/30/2020

Daily Mean Discharge in Cubic feet/second Water Year Oct 2019 to Sep 2020

| Day | OCT | NOV | DEC | JAN | FEB | MAR | APR | MAY | JUN | JUL | AUG | SEP |
|---|---|---|---|---|---|---|---|---|---|---|---|---|
| 1 | .39 | .39 | .54 | .36 | .37 | 1.27 | .91 | .54 | .54 | .68 | .54 | .47 |
| 2 | .40 | .38 | .54 | .36 | .37 | .66 | .84 | .54 | .54 | .55 | .54 | .49 |
| 3 | .38 | .38 | .71 | .44 | .37 | .54 | .74 | .54 | .54 | .54 | .54 | .48 |
| 4 | .38 | .38 | 120 | .36 | .36 | .49 | .82 | .54 | .55 | .54 | .54 | .48 |
| 5 | .38 | .36 | .58 | .38 | .35 | .48 | 15.1 | .58 | .98 | .54 | .54 | .51 |
| 6 | .38 | .44 | .66 | .54 | .33 | .48 | 241 | .59 | 1.46 | .76 | .54 | .48 |
| 7 | .35 | .46 | 3.04 | .41 | .37 | .48 | 70.6 | .54 | 1.29 | .85 | .54 | .47 |
| 8 | .35 | .44 | 12.3 | .54 | .36 | .48 | 39.8 | .54 | 1.09 | .85 | .52 | .47 |
| 9 | .38 | .42 | .54 | .37 | 31.6 | .55 | 80.4 | .54 | .71 | .75 | .52 | .48 |
| 10 | .36 | .41 | .53 | .37 | .84 | 32.2 | 15.1 | .54 | .75 | .66 | .52 | .47 |
| 11 | .35 | .39 | .48 | .38 | .53 | .55 | 1.76 | .57 | .88 | .59 | .52 | .48 |
| 12 | .38 | .37 | .48 | .37 | .48 | 166 | 2.15 | .54 | .80 | .56 | .48 | .46 |
| 13 | .36 | .38 | .48 | .47 | .48 | 69.5 | 1.97 | .56 | .58 | .54 | .48 | .42 |
| 14 | .40 | .38 | .46 | .57 | .48 | 2.72 | 1.05 | .93 | .63 | .60 | .51 | .51 |
| 15 | .39 | .38 | .41 | .52 | .48 | 5.14 | .76 | .55 | .79 | .71 | .48 | .47 |
| 16 | .39 | .40 | .45 | 1.02 | .48 | 93.4 | .60 | .54 | .59 | .54 | .44 | .54 |
| 17 | .38 | .39 | .38 | 9.73 | .48 | 4.84 | .60 | .54 | .58 | .54 | .42 | .43 |
| 18 | .38 | .45 | .37 | .36 | .48 | .57 | .60 | 17.7 | .54 | .54 | .56 | .45 |
| 19 | .37 | .46 | .36 | .36 | .48 | 20.0 | .60 | .56 | .54 | .54 | .42 | .44 |
| 20 | .38 | 34.2 | .44 | .41 | .56 | .72 | .60 | .54 | .54 | .54 | .48 | .40 |
| 21 | .60 | .57 | .36 | .41 | .48 | .54 | .58 | .54 | .54 | .54 | .61 | .43 |
| 22 | .36 | .54 | .99 | .41 | .48 | 70.4 | .66 | .56 | .54 | .54 | .47 | .41 |
| 23 | .36 | .54 | 145 | .37 | .46 | 13.6 | .55 | .54 | .54 | .54 | .47 | .42 |
| 24 | .36 | .54 | .56 | .36 | .42 | .63 | .55 | .54 | .54 | .54 | .47 | .49 |
| 25 | .37 | .54 | 43.7 | .37 | .55 | .88 | .54 | .54 | .56 | .62 | .47 | .43 |
| 26 | .36 | .54 | 272 | .38 | .55 | 1.18 | .54 | .79 | .56 | .54 | .46 | .47 |
| 27 | .37 | 49.0 | 2.07 | .40 | .58 | .60 | .54 | .98 | .54 | .54 | .47 | .45 |
| 28 | .40 | 188 | 1.97 | .40 | .47 | .55 | .54 | .92 | .54 | .54 | .45 | .46 |
| 29 | .38 | 5.67 | 1.78 | .39 | .42 | .54 | .54 | .86 | .81 | .54 | .48 | .48 |
| 30 | .54 | .54 | 1.30 | .37 | ------ | .62 | .54 | .57 | .61 | .56 | .47 | .46 |
| 31 | .40 | ------ | .42 | .36 | ------ | 1.01 | ------ | .54 | ------ | .84 | .47 | ------ |
| Total | 12.03 | 288.34 | 613.90 | 22.54 | 44.66 | 491.62 | 481.58 | 35.90 | 20.70 | 18.76 | 15.42 | 13.90 |
| Mean | .39 | 9.61 | 19.8 | .73 | 1.54 | 15.9 | 16.1 | 1.16 | .69 | .61 | .50 | .46 |
| Max | .60 | 188 | 272 | 9.73 | 31.6 | 166 | 241 | 17.7 | 1.46 | .85 | .61 | .54 |
| Min | .35 | .36 | .36 | .36 | .33 | .48 | .54 | .54 | .54 | .54 | .42 | .40 |
| Acre-Ft | 24 | 572 | 1220 | 45 | 89 | 975 | 955 | 71 | 41 | 37 | 31 | 28 |

| | | | | | | | | | | | | |
|---|---|---|---|---|---|---|---|---|---|---|---|---|
| Wtr Year 2020 | Total | 2059.35 | Mean | 5.63 | Max | 272 | Min | .33 | Inst Max | 3770 | Acre-Ft | 4080 |
| Cal Year 2019 | Total | 3749.80 | Mean | 10.3 | Max | 528 | Min | 0 | Inst Max | 2960 | Acre-Ft | 7440 |

# RUNOFF – DAILY DISCHARGE

Los Angeles County Dept of Public Works USDAY V115 Output 04/20/2021

Summary Report

Site: F271 Eaton Wash Below Eaton Wash Dam
USGS #:
Beginning Date: 10/01/2019
Ending Date: 09/30/2020

Daily Mean Discharge in Cubic feet/second Water Year Oct 2019 to Sep 2020

| Day | OCT | NOV | DEC | JAN | FEB | MAR | APR | MAY | JUN | JUL | AUG | SEP |
|---|---|---|---|---|---|---|---|---|---|---|---|---|
| 1 | 0 | 0 | 0 | 0 | 0 | 0 | .36 | 0 | 0 | 0 | 0 | 0 |
| 2 | 0 | 0 | 0 | 0 | 0 | 0 | .34 | 0 | 0 | 0 | 0 | 0 |
| 3 | 0 | 0 | 0 | 0 | 0 | 0 | .48 | 0 | 0 | 0 | 0 | 0 |
| 4 | 0 | 0 | 0 | 0 | 0 | 0 | .46 | 0 | 0 | 0 | 0 | 0 |
| 5 | 0 | 0 | 0 | 0 | 0 | 0 | .70 | 0 | 0 | 0 | 0 | 0 |
| 6 | 0 | 0 | 0 | 0 | 0 | 0 | 1.46 | 0 | 0 | 0 | 0 | 0 |
| 7 | 0 | 0 | 0 | 0 | 0 | 0 | .34 | 0 | 0 | 0 | 0 | 0 |
| 8 | 0 | 0 | 0 | 0 | 0 | 0 | 0 | 0 | 0 | 0 | 0 | 0 |
| 9 | 0 | 0 | 0 | 0 | .06 | 0 | 20.2 | 0 | 0 | 0 | 0 | 0 |
| 10 | 0 | 0 | 0 | 0 | 0 | 0 | 37.1 | 0 | 0 | 0 | 0 | 0 |
| 11 | 0 | 0 | 0 | 0 | 1.82 | 0 | 32.8 | 0 | 0 | 0 | 0 | 0 |
| 12 | 0 | 0 | 0 | 0 | 0 | 10.6 | 38.4 | 0 | 0 | 0 | 0 | 0 |
| 13 | 0 | 0 | 0 | 0 | 0 | 2.46 | 39.0 | 0 | 0 | 0 | 0 | 0 |
| 14 | 0 | 0 | 0 | 0 | 0 | .29 | 33.6 | 0 | 0 | 0 | 0 | 0 |
| 15 | 0 | 0 | 0 | 0 | 0 | .58 | 33.6 | 0 | 0 | 0 | 0 | 0 |
| 16 | 0 | 0 | 0 | 0 | 0 | .81 | 18.1 | 0 | 0 | 0 | 0 | 0 |
| 17 | 0 | 0 | 0 | 0 | 0 | 1.42 | 3.85 | 0 | 0 | 0 | 0 | 0 |
| 18 | 0 | 0 | 0 | 0 | 0 | 1.11 | 4.83 | .02 | 0 | 0 | 0 | 0 |
| 19 | 0 | 0 | 0 | 0 | 0 | 1.27 | 4.80 | 0 | 0 | 0 | 0 | 0 |
| 20 | 0 | 0 | 0 | 0 | 0 | .98 | 5.21 | 0 | 0 | 0 | 0 | 0 |
| 21 | 0 | 0 | 0 | 0 | 0 | .77 | 3.83 | 0 | 0 | 0 | 0 | 0 |
| 22 | 0 | 0 | 0 | 0 | 0 | .85 | 1.86 | 0 | 0 | 0 | 0 | 0 |
| 23 | 0 | 0 | 0 | 0 | 0 | .95 | 12.5 | 0 | 0 | 0 | 0 | 0 |
| 24 | 0 | 0 | 0 | 0 | 0 | .82 | 9.31 | 0 | 0 | 0 | 0 | 0 |
| 25 | 0 | 0 | 0 | 0 | 0 | .73 | 3.65 | 0 | 0 | 0 | 0 | 0 |
| 26 | 0 | 0 | 0 | 0 | 0 | .73 | 0 | 0 | 0 | 0 | 0 | 0 |
| 27 | 0 | 0 | 0 | 0 | 0 | .64 | .19 | 0 | 0 | 0 | 0 | 0 |
| 28 | 0 | 0 | 0 | 0 | 0 | .57 | 0 | 0 | 0 | 0 | 0 | 0 |
| 29 | 0 | 0 | 0 | 0 | 0 | .58 | 0 | 0 | 0 | 0 | 0 | 0 |
| 30 | 0 | 0 | 18.1 | 0 | ------ | .48 | 0 | 0 | 0 | 0 | 0 | 0 |
| 31 | 0 | ------ | 16.5 | 0 | ------ | .38 | ------ | 0 | ------ | 0 | 0 | ------ |
| Total | 0 | 0 | 34.6 | 0 | 1.88 | 27.02 | 306.97 | 0.02 | 0 | 0 | 0 | 0 |
| Mean | 0 | 0 | 1.12 | 0 | .065 | .87 | 10.2 | .001 | 0 | 0 | 0 | 0 |
| Max | 0 | 0 | 18.1 | 0 | 1.82 | 10.6 | 39.0 | .02 | 0 | 0 | 0 | 0 |
| Min | 0 | 0 | 0 | 0 | 0 | 0 | 0 | 0 | 0 | 0 | 0 | 0 |
| Acre-Ft | 0 | 0 | 69 | 0 | 3.7 | 54 | 609 | .04 | 0 | 0 | 0 | 0 |

| | | | | | | | | | | | | |
|---|---|---|---|---|---|---|---|---|---|---|---|---|
| Wtr Year 2020 | Total | 370.49 | Mean | 1.01 | Max | 39.0 | Min | 0 | Inst Max | 90.1 | Acre-Ft | 735 |
| Cal Year 2019 | Total | 1904.55 | Mean | 5.22 | Max | 82.3 | Min | 0 | Inst Max | 166 | Acre-Ft | 3780 |

# RUNOFF – DAILY DISCHARGE

Los Angeles County Dept of Public Works USDAY V115 Output 04/20/2021

Summary Report

Site: U7 Fish Creek
USGS #:
Beginning Date: 10/01/2019
Ending Date: 09/30/2020

Daily Mean Discharge in Cubic feet/second Water Year Oct 2019 to Sep 2020

| Day | OCT | NOV | DEC | JAN | FEB | MAR | APR | MAY | JUN | JUL | AUG | SEP |
|---|---|---|---|---|---|---|---|---|---|---|---|---|
| 1 | 0 | 0 | 0 | .27 | 3.77F | 1.80 | 0 | 0 | 0 | 0 | 0 | 0 |
| 2 | 0 | 0 | .02 | .47 | 3.71F | .94 | 0 | 0 | 0 | 0 | 0 | 0 |
| 3 | 0 | 0 | .02 | .72 | 3.65F | .35 | 0 | 0 | 0 | 0 | 0 | 0 |
| 4 | 0 | 0 | .07 | 1.02 | 3.60F | .08 | 0 | 0 | 0 | 0 | 0 | 0 |
| 5 | 0 | 0 | 0 | 1.37 | 3.54F | 0 | 0 | 0 | 0 | 0 | 0 | 0 |
| 6 | 0 | 0 | 0 | 1.75 | 3.48F | 0 | 19.5 | 0 | 0 | 0 | 0 | 0 |
| 7 | 0 | 0 | 0 | 2.16 | 3.43F | 0 | 10.3 | 0 | 0 | 0 | 0 | 0 |
| 8 | 0 | 0 | 0 | 2.61 | 3.37F | 0 | .22 | 0 | 0 | 0 | 0 | 0 |
| 9 | 0 | 0 | 0 | 3.12 | 3.31F | 0 | 0 | 0 | 0 | 0 | 0 | 0 |
| 10 | 0 | 0 | 0 | 3.68 | 3.26F | 0 | 0 | 0 | 0 | 0 | 0 | 0 |
| 11 | 0 | 0 | 0 | 4.29 | 3.20F | 0 | 0 | 0 | 0 | 0 | 0 | 0 |
| 12 | 0 | 0 | 0 | 4.95 | 3.15F | 1.53 | 0 | 0 | 0 | 0 | 0 | 0 |
| 13 | 0 | 0 | 0 | 5.68 | 3.10F | .09 | 0 | 0 | 0 | 0 | 0 | 0 |
| 14 | 0 | 0 | 0 | 6.48 | 3.04F | 3.11 | 0 | 0 | 0 | 0 | 0 | 0 |
| 15 | 0 | 0 | 0 | 7.33 | 2.99F | 4.09 | 0 | 0 | 0 | 0 | 0 | 0 |
| 16 | 0 | 0 | 0 | 8.21 | 2.94F | .02 | 0 | 0 | 0 | 0 | 0 | 0 |
| 17 | 0 | 0 | 0 | 9.13 | 2.88F | 0 | 0 | 0 | 0 | 0 | 0 | 0 |
| 18 | 0 | 0 | 0 | 9.35 | 2.83F | 0 | 0 | 0 | 0 | 0 | 0 | 0 |
| 19 | 0 | 0 | 0 | 8.86 | 2.78F | 0 | 0 | 0 | 0 | 0 | 0 | 0 |
| 20 | 0 | 3.91 | 0 | 8.39 | 2.73F | 0 | 0 | 0 | 0 | 0 | 0 | 0 |
| 21 | 0 | 3.91 | 0 | 7.92 | 2.68F | 0 | 0 | 0 | 0 | 0 | 0 | 0 |
| 22 | 0 | 0 | 41.5 | 7.47 | 2.63F | 0 | 0 | 0 | 0 | 0 | 0 | 0 |
| 23 | 0 | 0 | 21.1 | 7.02 | 2.58F | 0 | 0 | 0 | 0 | 0 | 0 | 0 |
| 24 | 0 | 0 | 5.02 | 6.58 | 2.53F | 0 | 0 | 0 | 0 | 0 | 0 | 0 |
| 25 | 0 | 0 | .35 | 6.15 | 2.48F | 0 | 0 | 0 | 0 | 0 | 0 | 0 |
| 26 | 0 | .66 | .50 | 5.73 | 2.44F | 0 | 0 | 0 | 0 | 0 | 0 | 0 |
| 27 | 0 | 9.30 | 0 | 5.34 | 2.39F | 0 | 0 | 0 | 0 | 0 | 0 | 0 |
| 28 | 0 | 10.6 | 0 | 4.98 | 2.35F | 0 | 0 | 0 | 0 | 0 | 0 | 0 |
| 29 | 0 | 3.80 | 0 | 4.62 | 2.30F | 0 | 0 | 0 | 0 | 0 | 0 | 0 |
| 30 | 0 | 2.58 | 0 | 4.29 | ------ | 0 | 0 | 0 | 0 | 0 | 0 | 0 |
| 31 | 0 | ------ | 0 | 3.96 | ------ | 0 | ------ | 0 | ------ | 0 | 0 | ------ |
| Total | 0 | 34.76 | 68.58 | 153.90 | 87.14 | 12.01 | 30.02 | 0 | 0 | 0 | 0 | 0 |
| Mean | 0 | 1.16 | 2.21 | 4.96 | 3.00 | .39 | 1.00 | 0 | 0 | 0 | 0 | 0 |
| Max | 0 | 10.6 | 41.5 | 9.35 | 3.77 | 4.09 | 19.5 | 0 | 0 | 0 | 0 | 0 |
| Min | 0 | 0 | 0 | .27 | 2.30 | 0 | 0 | 0 | 0 | 0 | 0 | 0 |
| Acre-Ft | 0 | 69 | 136 | 305 | 173 | 24 | 60 | 0 | 0 | 0 | 0 | 0 |

| | | | | | | | | | | | | |
|---|---|---|---|---|---|---|---|---|---|---|---|---|
| Wtr Year 2020 | Total | 386.41 | Mean | 1.06 | Max | 41.5 | Min | 0 | Inst Max | 57.0 | Acre-Ft | 766 |
| Cal Year 2019 | Total | 617.52 | Mean | 1.69 | Max | 55.0 | Min | 0 | Inst Max | 64.5 | Acre-Ft | 1220 |

F: Indicated Estimated Flow.

# RUNOFF – DAILY DISCHARGE

Los Angeles County Dept of Public Works USDAY V115 Output 04/20/2021

Summary Report

Site: L1 Little Rock Creek Above Little Rock Dam
USGS #:
Beginning Date: 10/01/2019
Ending Date: 09/30/2020

Daily Mean Discharge in Cubic feet/second Water Year Oct 2019 to Sep 2020

| Day | OCT | NOV | DEC | JAN | FEB | MAR | APR | MAY | JUN | JUL | AUG | SEP |
|---|---|---|---|---|---|---|---|---|---|---|---|---|
| 1 | 0 | 0 | 2.38 | 7.82 | 15.7 | 11.0 | 55.1 | 63.3 | 13.5 | 3.42 | .13 | 0 |
| 2 | 0 | 0 | 5.69 | 7.57 | 15.7 | 12.5 | 65.5 | 56.3 | 13.1 | 3.13 | .03 | 0 |
| 3 | 0 | 0 | 10.8 | 7.63 | 15.5 | 11.7 | 61.7 | 50.9 | 12.3 | 2.90 | 0 | 0 |
| 4 | 0 | 0 | 15.8 | 7.50 | 14.8 | 11.3 | 56.5 | 45.9 | 11.7 | 2.80 | 0 | 0 |
| 5 | 0 | 0 | 15.3 | 7.44 | 14.9 | 11.5 | 56.5 | 42.2 | 11.5 | 2.49 | 0 | 0 |
| 6 | 0 | 0 | 14.3 | 7.41 | 14.5 | 11.6 | 129 | 39.1 | 11.9 | 2.28 | 0 | 0 |
| 7 | 0 | 0 | 13.6 | 7.45 | 14.0 | 11.6 | 150 | 36.5 | 12.0 | 2.05 | 0 | 0 |
| 8 | 0 | 0 | 11.9 | 7.33 | 13.5 | 11.9 | 180 | 34.1 | 11.2 | 1.88 | 0 | 0 |
| 9 | 0 | 0 | 11.0 | 7.16 | 13.3 | 11.7 | 143 | 31.9 | 10.7 | 1.74 | 0 | 0 |
| 10 | 0 | 0 | 10.0 | 7.26 | 13.8 | 14.4 | 138 | 29.8 | 9.99 | 1.62 | 0 | 0 |
| 11 | 0 | 0 | 9.24 | 7.13 | 13.4 | 32.4 | 143 | 27.8 | 9.25 | 1.47 | 0 | 0 |
| 12 | 0 | 0 | 8.90 | 7.19 | 12.6 | 44.2 | 159 | 26.8 | 8.61 | 1.34 | 0 | 0 |
| 13 | 0 | 0 | 8.94 | 7.03 | 12.4 | 81.2 | 168 | 26.3 | 8.49 | 1.22 | 0 | 0 |
| 14 | 0 | 0 | 8.69 | 7.06 | 12.2 | 74.7 | 158 | 25.8 | 8.66 | 1.11 | 0 | 0 |
| 15 | 0 | 0 | 8.57 | 7.62 | 11.9 | 65.1 | 140 | 24.7 | 8.18 | 1.03 | 0 | 0 |
| 16 | 0 | 0 | 8.71 | 8.51 | 11.7 | 60.7 | 138 | 23.5 | 7.72 | .97 | 0 | 0 |
| 17 | 0 | 0 | 8.54 | 8.98 | 11.9 | 68.3 | 137 | 22.2 | 7.56 | .92 | 0 | 0 |
| 18 | 0 | 0 | 8.56 | 10.0 | 12.2 | 53.6 | 120 | 22.2 | 7.27 | .89 | 0 | 0 |
| 19 | 0 | 0 | 8.48 | 10.9 | 12.0 | 47.6 | 114 | 24.6 | 6.63 | .77 | 0 | 0 |
| 20 | 0 | 0 | 8.46 | 11.6 | 11.9 | 42.9 | 113 | 22.8 | 5.70 | .76 | 0 | 0 |
| 21 | 0 | 0 | 8.38 | 12.2 | 11.8 | 40.8 | 109 | 21.3 | 5.67 | .76 | 0 | 0 |
| 22 | 0 | 0 | 8.47 | 14.3 | 11.9 | 40.7 | 109 | 20.1 | 5.26 | .72 | 0 | 0 |
| 23 | 0 | 0 | 8.16 | 15.6 | 12.2 | 91.3 | 112 | 19.4 | 4.86 | .67 | 0 | 0 |
| 24 | 0 | 0 | 8.13 | 16.3 | 12.0 | 83.0 | 115 | 18.4 | 4.45 | .63 | 0 | 0 |
| 25 | 0 | 0 | 8.15 | 16.7 | 11.6 | 70.5 | 109 | 17.5 | 4.10 | .60 | 0 | 0 |
| 26 | 0 | 0 | 7.94 | 16.9 | 11.2 | 60.9 | 99.1 | 16.6 | 3.85 | .56 | 0 | 0 |
| 27 | 0 | 0 | 7.92 | 17.9 | 11.0 | 53.1 | 88.8 | 15.7 | 3.74 | .52 | 0 | 0 |
| 28 | 0 | .04 | 7.95 | 18.0 | 10.9 | 48.0 | 80.5 | 14.9 | 3.67 | .48 | 0 | 0 |
| 29 | 0 | .20 | 7.96 | 17.5 | 10.9 | 46.0 | 76.7 | 14.3 | 3.66 | .42 | 0 | 0 |
| 30 | 0 | .77 | 7.82 | 16.5 | ------ | 43.6 | 71.0 | 14.1 | 3.70 | .35 | 0 | 0 |
| 31 | 0 | ------ | 7.70 | 16.0 | ------ | 45.5 | ------ | 14.0 | ------ | .26 | 0 | ------ |
| Total | 0 | 1.01 | 286.44 | 338.49 | 371.4 | 1313.3 | 3395.4 | 863.0 | 238.92 | 40.76 | 0.16 | 0 |
| Mean | 0 | .034 | 9.24 | 10.9 | 12.8 | 42.4 | 113 | 27.8 | 7.96 | 1.31 | .005 | 0 |
| Max | 0 | .77 | 15.8 | 18.0 | 15.7 | 91.3 | 180 | 63.3 | 13.5 | 3.42 | .13 | 0 |
| Min | 0 | 0 | 2.38 | 7.03 | 10.9 | 11.0 | 55.1 | 14.0 | 3.66 | .26 | 0 | 0 |
| Acre-Ft | 0 | 2.0 | 568 | 671 | 737 | 2600 | 6730 | 1710 | 474 | 81 | .32 | 0 |

| | | | | | | | | | | | | |
|---|---|---|---|---|---|---|---|---|---|---|---|---|
| Wtr Year 2020 | Total | 6848.88 | Mean | 18.7 | Max | 180 | Min | 0 | Inst Max | 211 | Acre-Ft | 13580 |
| Cal Year 2019 | Total | 9627.01 | Mean | 26.4 | Max | 667 | Min | 0 | Inst Max | 2380 | Acre-Ft | 19090 |

# RUNOFF – DAILY DISCHARGE

Los Angeles County Dept of Public Works USDAY V115 Output 04/20/2021

Summary Report

Site: F356 Live Oak Creek Below Live Oak Dam
USGS #:
Beginning Date: 10/01/2019
Ending Date: 09/30/2020

Daily Mean Discharge in Cubic feet/second Water Year Oct 2019 to Sep 2020

| Day | OCT | NOV | DEC | JAN | FEB | MAR | APR | MAY | JUN | JUL | AUG | SEP |
|---|---|---|---|---|---|---|---|---|---|---|---|---|
| 1 | 0 | 0 | 0 | 0 | 0 | 2.70 | 0 | 0 | 0 | 0 | 0 | 0 |
| 2 | 0 | 0 | 0 | 0 | 0 | 1.47 | 0 | 0 | 0 | 0 | 0 | 0 |
| 3 | 0 | 0 | 0 | 0 | 0 | 0 | 0 | 0 | 0 | 0 | 0 | 0 |
| 4 | 0 | 0 | 0 | 0 | 0 | 0 | 0 | 0 | 0 | 0 | 0 | 0 |
| 5 | 0 | 0 | 0 | 0 | 0 | 0 | 0 | 0 | 0 | 0 | 0 | 0 |
| 6 | 0 | 0 | 0 | 0 | 0 | 0 | 0 | 0 | 0 | 0 | 0 | 0 |
| 7 | 0 | 0 | 0 | 0 | 0 | 0 | 0 | 0 | 0 | 0 | 0 | 0 |
| 8 | 0 | 0 | 0 | 0 | 0 | 0 | 0 | 0 | 0 | 0 | 0 | 0 |
| 9 | 0 | 0 | 0 | 0 | 0 | 0 | 0 | 0 | 0 | 0 | 0 | 0 |
| 10 | 0 | 0 | 0 | 0 | 0 | 0 | 0 | 0 | 0 | 0 | 0 | 0 |
| 11 | 0 | 0 | 0 | 0 | 0 | 0 | 0 | 0 | 0 | 0 | 0 | 0 |
| 12 | 0 | 0 | 0 | 0 | 0 | 0 | 0 | 0 | 0 | 0 | 0 | 0 |
| 13 | 0 | 0 | 0 | 0 | 0 | 0 | 0 | 0 | 0 | 0 | 0 | 0 |
| 14 | 0 | 0 | 0 | 0 | 0 | 0 | 0 | 0 | 0 | 0 | 0 | 0 |
| 15 | 0 | 0 | 0 | 0 | 0 | 0 | 0 | 0 | 0 | 0 | 0 | 0 |
| 16 | 0 | 0 | 0 | 0 | 0 | 0 | 0 | 0 | 0 | 0 | 0 | 0 |
| 17 | 0 | 0 | 0 | 0 | 0 | 0 | 0 | 0 | 0 | 0 | 0 | 0 |
| 18 | 0 | 0 | 0 | 0 | 0 | 0 | 0 | 0 | 0 | 0 | 0 | 0 |
| 19 | 0 | 0 | 0 | 0 | 0 | 0 | 0 | 0 | 0 | 0 | 0 | 0 |
| 20 | 0 | 0 | 0 | 0 | 0 | 0 | 0 | 0 | 0 | 0 | 0 | 0 |
| 21 | 0 | 0 | 0 | 0 | 0 | 0 | 5.70 | 0 | 0 | 0 | 0 | 0 |
| 22 | 0 | 0 | 0 | 0 | 0 | 0 | 10.5 | 0 | 0 | 0 | 0 | 0 |
| 23 | 0 | 0 | 0 | 0 | 0 | 0 | 10.5 | 0 | 0 | 0 | 0 | 0 |
| 24 | 0 | 0 | 0 | 0 | 0 | 0 | .86 | 0 | 0 | 0 | 0 | 0 |
| 25 | 0 | 0 | 0 | 0 | 0 | 0 | 0 | 0 | 0 | 0 | 0 | 0 |
| 26 | 0 | 0 | 0 | 0 | 0 | 0 | 0 | 0 | 0 | 0 | 0 | 0 |
| 27 | 0 | 0 | 0 | 0 | 1.16 | 0 | 3.60 | 0 | 0 | 0 | 0 | 0 |
| 28 | 0 | 0 | 0 | 0 | 2.40 | 0 | .73 | 0 | 0 | 0 | 0 | 0 |
| 29 | 0 | 0 | 0 | 0 | 2.90 | 0 | 0 | 0 | 0 | 0 | 0 | 0 |
| 30 | 0 | 0 | 0 | 0 | ------ | 0 | 0 | 0 | 0 | 0 | 0 | 0 |
| 31 | 0 | ------ | 0 | 0 | ------ | 0 | ------ | 0 | ------ | 0 | 0 | ------ |
| Total | 0 | 0 | 0 | 0 | 6.46 | 4.17 | 31.89 | 0 | 0 | 0 | 0 | 0 |
| Mean | 0 | 0 | 0 | 0 | .22 | .13 | 1.06 | 0 | 0 | 0 | 0 | 0 |
| Max | 0 | 0 | 0 | 0 | 2.90 | 2.70 | 10.5 | 0 | 0 | 0 | 0 | 0 |
| Min | 0 | 0 | 0 | 0 | 0 | 0 | 0 | 0 | 0 | 0 | 0 | 0 |
| Acre-Ft | 0 | 0 | 0 | 0 | 13 | 8.3 | 63 | 0 | 0 | 0 | 0 | 0 |

| | | | | | | | | | | | | |
|---|---|---|---|---|---|---|---|---|---|---|---|---|
| Wtr Year 2020 | Total | 42.52 | Mean | .12 | Max | 10.5 | Min | 0 | Inst Max | 10.5 | Acre-Ft | 84 |
| Cal Year 2019 | Total | 577.26 | Mean | 1.58 | Max | 103 | Min | 0 | Inst Max | 264 | Acre-Ft | 1140 |

# RUNOFF – DAILY DISCHARGE

Los Angeles County Dept of Public Works USDAY V115 Output 04/20/2021

Summary Report

Site: F319 Los Angeles River Below Wardlow Road
USGS #:
Beginning Date: 10/01/2019
Ending Date: 09/30/2020

Daily Mean Discharge in Cubic feet/second Water Year Oct 2019 to Sep 2020

| Day | OCT | NOV | DEC | JAN | FEB | MAR | APR | MAY | JUN | JUL | AUG | SEP |
|---|---|---|---|---|---|---|---|---|---|---|---|---|
| 1 | 57.7 | 99.2 | 120 | 69.9 | 81.2 | 80.8 | 97.9 | 90.0 | 73.2 | 68.9 | 86.0 | 74.1 |
| 2 | 57.8 | 86.6 | 94.4 | 73.0 | 81.5 | 81.4 | 97.5 | 90.0 | 73.2 | 68.9 | 86.7 | 73.8 |
| 3 | 57.8 | 76.5 | 75.5 | 77.3 | 81.8 | 81.9 | 97.1 | 90.0 | 73.3 | 68.9 | 87.4 | 73.7 |
| 4 | 57.9 | 67.7 | 4360 | 82.2 | 81.1 | 81.8 | 96.7 | 90.0 | 73.4 | 68.9 | 88.0 | 73.7 |
| 5 | 58.0 | 59.8 | 214 | 86.9 | 80.5 | 82.5 | 96.3 | 90.0 | 73.5 | 68.8 | 87.6 | 73.7 |
| 6 | 58.1 | 52.9 | 65.2 | 89.4 | 78.8 | 82.4 | 6150 | 90.0 | 73.5 | 67.4 | 87.2 | 73.7 |
| 7 | 58.2 | 51.7 | 127 | 88.1 | 76.0 | 82.5 | 2560 | 90.0 | 72.8 | 67.9 | 86.7 | 73.7 |
| 8 | 58.3 | 51.3 | 698 | 86.2 | 72.9 | 83.1 | 2300 | 90.0 | 72.0 | 68.5 | 86.3 | 73.7 |
| 9 | 58.3 | 50.7 | 190 | 84.4 | 210 | 83.9 | 3680 | 90.0 | 72.0 | 69.1 | 85.8 | 72.6 |
| 10 | 58.3 | 50.8 | 60.3 | 82.5 | 108 | 527 | 2790 | 90.0 | 72.0 | 69.7 | 85.4 | 72.0 |
| 11 | 57.7 | 50.9 | 60.7 | 80.7 | 84.5 | 731 | 299 | 90.0 | 72.0 | 70.3 | 83.9 | 72.0 |
| 12 | 56.8 | 51.1 | 60.2 | 78.9 | 78.9 | 5360 | 106 | 90.0 | 72.0 | 70.8 | 82.7 | 72.0 |
| 13 | 55.1 | 51.2 | 61.3 | 76.5 | 76.2 | 4700 | 237 | 88.1 | 72.0 | 71.4 | 82.2 | 72.0 |
| 14 | 53.9 | 51.3 | 60.8 | 74.0 | 74.9 | 621 | 95.0 | 79.1 | 71.2 | 72.1 | 81.8 | 72.0 |
| 15 | 53.1 | 51.4 | 59.9 | 74.0 | 73.6 | 516 | 92.3 | 70.5 | 70.4 | 72.7 | 81.3 | 72.0 |
| 16 | 52.3 | 51.6 | 59.9 | 74.3 | 72.1 | 1860 | 91.9 | 64.7 | 70.4 | 73.3 | 80.9 | 72.0 |
| 17 | 51.6 | 51.3 | 59.9 | 710 | 71.3 | 1000 | 91.6 | 69.5 | 70.4 | 74.0 | 80.5 | 72.0 |
| 18 | 50.8 | 50.5 | 59.9 | 79.7 | 70.7 | 241 | 92.0 | 415 | 70.4 | 74.7 | 80.0 | 70.5 |
| 19 | 50.0 | 50.6 | 59.9 | 77.0 | 73.9 | 161 | 90.9 | 142 | 70.4 | 75.3 | 79.6 | 70.4 |
| 20 | 48.8 | 730 | 59.4 | 77.3 | 75.4 | 151 | 90.4 | 88.5 | 70.4 | 76.0 | 79.2 | 70.4 |
| 21 | 47.2 | 117 | 58.4 | 79.1 | 76.0 | 95.2 | 90.1 | 85.2 | 70.4 | 76.6 | 78.8 | 70.4 |
| 22 | 47.8 | 72.8 | 59.1 | 78.0 | 260 | 1730 | 89.4 | 81.6 | 70.4 | 77.3 | 78.3 | 70.4 |
| 23 | 52.2 | 69.3 | 5420 | 78.3 | 106 | 3490 | 88.7 | 78.9 | 70.4 | 78.0 | 77.9 | 70.4 |
| 24 | 57.3 | 68.5 | 85.2 | 78.6 | 78.4 | 125 | 88.1 | 76.8 | 69.9 | 78.6 | 77.5 | 70.4 |
| 25 | 62.6 | 71.3 | 113 | 80.4 | 77.4 | 100 | 88.1 | 74.4 | 69.1 | 79.3 | 77.0 | 70.4 |
| 26 | 68.3 | 71.1 | 12400 | 81.0 | 77.1 | 98.1 | 89.5 | 72.2 | 68.9 | 78.9 | 76.6 | 70.4 |
| 27 | 74.3 | 1470 | 93.3 | 80.9 | 80.3 | 98.3 | 89.7 | 70.3 | 68.9 | 78.9 | 76.2 | 70.4 |
| 28 | 80.2 | 4430 | 59.4 | 80.1 | 81.4 | 99.5 | 90.0 | 71.2 | 68.9 | 79.6 | 75.8 | 70.4 |
| 29 | 85.7 | 1280 | 61.3 | 80.2 | 81.0 | 99.1 | 89.1 | 72.9 | 68.9 | 82.2 | 75.4 | 70.4 |
| 30 | 93.0 | 115 | 61.6 | 80.6 | ------ | 98.7 | 89.3 | 73.0 | 68.9 | 84.6 | 74.9 | 69.3 |
| 31 | 101 | ------ | 64.7 | 80.9 | ------ | 98.3 | ------ | 73.1 | ------ | 85.3 | 74.5 | ------ |
| Total | 1880.1 | 9602.1 | 25082.3 | 3100.4 | 2620.9 | 22740.5 | 20143.6 | 2927.0 | 2133.2 | 2296.9 | 2522.1 | 2152.9 |
| Mean | 60.6 | 320 | 809 | 100 | 90.4 | 734 | 671 | 94.4 | 71.1 | 74.1 | 81.4 | 71.8 |
| Max | 101 | 4430 | 12400 | 710 | 260 | 5360 | 6150 | 415 | 73.5 | 85.3 | 88.0 | 74.1 |
| Min | 47.2 | 50.5 | 58.4 | 69.9 | 70.7 | 80.8 | 88.1 | 64.7 | 68.9 | 67.4 | 74.5 | 69.3 |
| Acre-Ft | 3730 | 19050 | 49750 | 6150 | 5200 | 45110 | 39950 | 5810 | 4230 | 4560 | 5000 | 4270 |

| | | | | | | | | | | | | |
|---|---|---|---|---|---|---|---|---|---|---|---|---|
| Wtr Year 2020 | Total | 97202.0 | Mean | 266 | Max | 12400 | Min | 47.2 | Inst Max | 44000 | Acre-Ft | 192800 |
| Cal Year 2019 | Total | 174356.4 | Mean | 478 | Max | 15400 | Min | 47.2 | Inst Max | 70900 | Acre-Ft | 345800 |

# RUNOFF – DAILY DISCHARGE

Los Angeles County Dept of Public Works USDAY V115 Output 04/20/2021

Summary Report

Site: F300 Los Angeles River at Tujunga Avenue
USGS #:
Beginning Date: 10/01/2019
Ending Date: 09/30/2020

Daily Mean Discharge in Cubic feet/second Water Year Oct 2019 to Sep 2020

| Day | OCT | NOV | DEC | JAN | FEB | MAR | APR | MAY | JUN | JUL | AUG | SEP |
|---|---|---|---|---|---|---|---|---|---|---|---|---|
| 1 | 28.3 | 23.4 | 285 | 47.6 | 39.2 | 31.5 | 22.5 | 38.5 | 38.9 | 25.6 | 32.8 | 43.1 |
| 2 | 30.1 | 22.5 | 41.4 | 47.2 | 40.0 | 32.8 | 34.0 | 41.7 | 37.4 | 26.4 | 44.9 | 41.6 |
| 3 | 30.1 | 22.2 | 39.8 | 40.0 | 38.6 | 30.6 | 37.9 | 42.3 | 37.1 | 29.7 | 45.7 | 42.8 |
| 4 | 29.2 | 23.3 | 1190 | 39.1 | 38.1 | 34.4 | 46.7 | 43.9 | 36.7 | 33.0 | 42.5 | 41.6 |
| 5 | 28.9 | 22.6 | 50.3 | 37.6 | 37.9 | 28.6 | 72.9 | 45.6 | 34.6 | 35.8 | 40.7 | 39.8 |
| 6 | 28.0 | 25.2 | 56.5 | 37.8 | 38.8 | 28.0 | 2520 | 41.9 | 34.3 | 38.7 | 39.4 | 36.7 |
| 7 | 25.2 | 25.0 | 105 | 37.7 | 37.8 | 19.3 | 757 | 43.8 | 35.8 | 41.7 | 39.0 | 47.0 |
| 8 | 21.6 | 26.4 | 268 | 50.8 | 38.1 | 7.99 | 243 | 42.8 | 33.5 | 40.0 | 40.8 | 40.8 |
| 9 | 23.4 | 25.8 | 42.1 | 40.9 | 57.0 | 11.1 | 980 | 42.3 | 31.3 | 42.4 | 43.1 | 42.6 |
| 10 | 22.1 | 24.8 | 32.8 | 39.5 | 36.8 | 203 | 561 | 40.9 | 29.3 | 39.4 | 36.1 | 41.1 |
| 11 | 19.5 | 25.9 | 27.4 | 44.5 | 35.0 | 53.4 | 98.5 | 36.8 | 28.8 | 39.1 | 28.6 | 41.5 |
| 12 | 20.2 | 25.8 | 31.5 | 46.0 | 37.2 | 1700 | 69.0 | 35.6 | 28.8 | 42.0 | 28.4 | 46.0 |
| 13 | 21.0 | 22.7 | 35.4 | 42.6 | 36.7 | 963 | 59.7 | 34.5 | 39.8 | 39.3 | 34.0 | 43.5 |
| 14 | 21.3 | 26.2 | 33.1 | 43.4 | 39.5 | 137 | 49.8 | 36.8 | 34.6 | 43.3 | 38.6 | 43.4 |
| 15 | 18.9 | 25.2 | 31.3 | 42.7 | 37.8 | 116 | 52.1 | 39.0 | 31.8 | 38.4 | 40.4 | 43.6 |
| 16 | 19.6 | 25.6 | 32.7 | 40.7 | 38.2 | 711 | 52.8 | 41.0 | 31.4 | 26.7 | 39.8 | 43.8 |
| 17 | 20.7 | 24.6 | 34.0 | 234 | 38.0 | 133 | 54.3 | 41.5 | 34.5 | 35.9 | 37.6 | 44.6 |
| 18 | 22.5 | 27.1 | 31.6 | 42.8 | 36.7 | 41.0 | 62.3 | 141 | 34.9 | 37.8 | 37.9 | 40.1 |
| 19 | 24.1 | 28.0 | 26.4 | 41.4 | 40.1 | 39.4 | 50.2 | 41.3 | 33.9 | 40.1 | 36.3 | 41.8 |
| 20 | 24.3 | 63.3 | 30.9 | 42.1 | 37.7 | 39.0 | 52.9 | 35.4 | 30.7 | 42.5 | 37.2 | 41.8 |
| 21 | 24.7 | 37.0 | 33.4 | 42.9 | 34.8 | 24.9 | 47.2 | 31.8 | 30.2 | 36.2 | 36.3 | 43.0 |
| 22 | 22.6 | 39.4 | 529 | 46.4 | 77.1 | 1150 | 35.5 | 29.7 | 29.9 | 41.6 | 39.2 | 47.1 |
| 23 | 23.8 | 38.3 | 1310 | 43.6 | 26.5 | 262 | 44.7 | 32.8 | 27.4 | 43.8 | 38.4 | 37.1 |
| 24 | 22.2 | 41.2 | 51.1 | 44.9 | 34.2 | 38.5 | 42.1 | 31.6 | 14.2 | 46.3 | 38.3 | 14.6 |
| 25 | 22.6 | 44.4 | 581 | 40.0 | 32.1 | 30.2 | 46.8 | 31.6 | 17.5 | 46.8 | 38.2 | 32.0 |
| 26 | 23.7 | 40.8 | 2710 | 41.2 | 32.1 | 26.7 | 43.9 | 33.2 | 27.1 | 47.9 | 34.1 | 38.0 |
| 27 | 25.0 | 611 | 69.6 | 39.2 | 34.8 | 24.0 | 51.8 | 33.4 | 26.3 | 48.7 | 17.3 | 40.0 |
| 28 | 24.0 | 1610 | 52.9 | 37.8 | 32.8 | 23.8 | 43.8 | 34.4 | 24.9 | 43.9 | 27.2 | 41.3 |
| 29 | 24.6 | 212 | 47.7 | 37.7 | 32.3 | 24.7 | 24.7 | 33.5 | 24.7 | 34.6 | 37.4 | 41.9 |
| 30 | 22.5 | 126 | 47.5 | 37.0 | ------ | 21.1 | 36.6 | 35.0 | 21.7 | 16.7 | 41.2 | 38.8 |
| 31 | 22.5 | ------ | 50.5 | 38.1 | ------ | 20.4 | ------ | 38.6 | ------ | 29.7 | 40.0 | ------ |
| Total | 737.2 | 3335.7 | 7907.9 | 1487.2 | 1115.9 | 6006.39 | 6293.7 | 1272.2 | 922.0 | 1174.0 | 1151.4 | 1221.0 |
| Mean | 23.8 | 111 | 255 | 48.0 | 38.5 | 194 | 210 | 41.0 | 30.7 | 37.9 | 37.1 | 40.7 |
| Max | 30.1 | 1610 | 2710 | 234 | 77.1 | 1700 | 2520 | 141 | 39.8 | 48.7 | 45.7 | 47.1 |
| Min | 18.9 | 22.2 | 26.4 | 37.0 | 26.5 | 7.99 | 22.5 | 29.7 | 14.2 | 16.7 | 17.3 | 14.6 |
| Acre-Ft | 1460 | 6620 | 15690 | 2950 | 2210 | 11910 | 12480 | 2520 | 1830 | 2330 | 2280 | 2420 |

| | | | | | | | | | | | | |
|---|---|---|---|---|---|---|---|---|---|---|---|---|
| Wtr Year 2020 | Total | 32624.59 | Mean | 89.1 | Max | 2710 | Min | 7.99 | Inst Max | 17600 | Acre-Ft | 64710 |
| Cal Year 2019 | Total | 70250.5 | Mean | 192 | Max | 4700 | Min | 18.9 | Inst Max | 22100 | Acre-Ft | 139300 |

# RUNOFF – DAILY DISCHARGE

Los Angeles County Dept of Public Works USDAY V115 Output 04/20/2021

Summary Report

Site: F57C Los Angeles River Above Arroyo Seco
USGS #:
Beginning Date: 10/01/2019
Ending Date: 09/30/2020

Daily Mean Discharge in Cubic feet/second Water Year Oct 2019 to Sep 2020

| Day | OCT | NOV | DEC | JAN | FEB | MAR | APR | MAY | JUN | JUL | AUG | SEP |
|---|---|---|---|---|---|---|---|---|---|---|---|---|
| 1 | 59.7 | 39.7 | 63.0 | 65.7 | 61.6 | 96.6 | 23.4 | 48.9 | 38.7 | 26.8 | 55.6 | 64.8 |
| 2 | 60.8 | 41.8 | 52.6 | 64.7 | 62.7 | 149 | 25.7 | 50.0 | 38.4 | 32.9 | 65.6 | 64.3 |
| 3 | 63.2 | 40.7 | 54.2 | 64.3 | 68.1 | 121 | 25.1 | 46.5 | 38.0 | 36.5 | 65.2 | 61.9 |
| 4 | 46.9 | 40.2 | 1860 | 63.9 | 63.4 | 78.0 | 29.3 | 43.6 | 37.7 | 45.2 | 63.3 | 61.6 |
| 5 | 48.9 | 39.6 | 73.1 | 63.6 | 56.9 | 72.9 | 39.3 | 43.1 | 37.4 | 51.1 | 64.5 | 59.1 |
| 6 | 46.3 | 40.9 | 71.8 | 62.3 | 53.4 | 68.0 | 3660 | 39.2 | 36.0 | 50.7 | 60.5 | 60.5 |
| 7 | 44.1 | 41.2 | 124 | 61.2 | 46.0 | 63.3 | 1440 | 38.4 | 35.7 | 56.2 | 63.4 | 61.5 |
| 8 | 41.2 | 42.6 | 555 | 60.8 | 40.8 | 46.9 | 404 | 38.8 | 35.4 | 63.4 | 65.9 | 58.9 |
| 9 | 42.8 | 43.2 | 73.0 | 60.8 | 191 | 45.7 | 1210 | 38.7 | 35.1 | 59.7 | 67.7 | 60.7 |
| 10 | 41.6 | 43.1 | 51.4 | 59.1 | 37.3 | 507 | 716 | 38.6 | 34.9 | 59.5 | 64.8 | 61.0 |
| 11 | 36.6 | 40.7 | 49.1 | 58.5 | 34.1 | 220 | 46.7 | 37.5 | 34.6 | 57.3 | 57.1 | 59.6 |
| 12 | 36.7 | 43.2 | 46.2 | 58.1 | 34.0 | 2890 | 40.9 | 37.7 | 34.3 | 65.6 | 52.1 | 65.6 |
| 13 | 40.0 | 41.2 | 47.3 | 56.6 | 39.3 | 2340 | 53.8 | 37.0 | 34.6 | 57.2 | 53.6 | 68.2 |
| 14 | 38.2 | 44.4 | 45.5 | 55.9 | 39.6 | 189 | 35.1 | 37.8 | 35.0 | 62.0 | 58.7 | 66.2 |
| 15 | 40.2 | 46.1 | 45.3 | 55.4 | 46.6 | 169 | 34.7 | 37.9 | 33.6 | 61.4 | 63.0 | 63.2 |
| 16 | 37.7 | 45.6 | 44.5 | 56.1 | 51.4 | 985 | 34.4 | 38.0 | 32.6 | 49.2 | 66.5 | 64.4 |
| 17 | 36.0 | 45.7 | 44.4 | 306 | 53.0 | 156 | 35.9 | 37.6 | 32.9 | 51.1 | 64.3 | 63.8 |
| 18 | 39.8 | 46.2 | 43.5 | 62.7 | 57.7 | 34.3 | 44.1 | 225 | 32.4 | 56.2 | 59.8 | 62.1 |
| 19 | 43.2 | 45.8 | 41.1 | 60.9 | 66.1 | 35.7 | 38.9 | 40.9 | 31.4 | 60.8 | 61.5 | 60.4 |
| 20 | 43.8 | 158 | 40.2 | 60.5 | 70.1 | 29.6 | 42.8 | 37.9 | 31.2 | 55.5 | 60.1 | 65.3 |
| 21 | 40.0 | 61.5 | 42.8 | 60.4 | 68.5 | 24.5 | 43.4 | 37.1 | 30.9 | 53.3 | 61.1 | 62.7 |
| 22 | 41.1 | 58.6 | 59.2 | 60.4 | 125 | 1020 | 40.8 | 36.4 | 29.7 | 54.7 | 62.2 | 68.7 |
| 23 | 41.2 | 55.7 | 2220 | 60.3 | 73.8 | 683 | 45.4 | 36.8 | 29.6 | 58.0 | 66.0 | 64.9 |
| 24 | 41.3 | 56.5 | 57.1 | 60.1 | 72.3 | 28.1 | 48.5 | 37.3 | 29.4 | 63.0 | 68.4 | 44.9 |
| 25 | 39.7 | 56.0 | 166 | 59.3 | 73.6 | 24.7 | 54.7 | 36.8 | 28.5 | 64.0 | 62.7 | 50.0 |
| 26 | 41.9 | 59.1 | 3900 | 59.7 | 74.0 | 23.8 | 58.0 | 37.2 | 28.5 | 65.9 | 62.2 | 60.2 |
| 27 | 45.0 | 1010 | 76.6 | 59.5 | 74.8 | 22.3 | 62.4 | 37.8 | 28.5 | 64.7 | 45.3 | 60.3 |
| 28 | 42.1 | 1930 | 70.6 | 58.3 | 75.8 | 22.7 | 61.1 | 37.2 | 28.5 | 63.7 | 47.0 | 61.8 |
| 29 | 41.7 | 536 | 69.4 | 57.9 | 80.0 | 23.3 | 47.1 | 37.7 | 27.5 | 60.2 | 59.6 | 64.0 |
| 30 | 41.4 | 56.1 | 67.6 | 57.5 | ------ | 23.5 | 50.6 | 38.5 | 26.8 | 44.1 | 65.6 | 61.6 |
| 31 | 40.1 | ------ | 67.0 | 58.3 | ------ | 22.6 | ------ | 39.0 | ------ | 49.2 | 63.1 | ------ |
| Total | 1343.2 | 4849.4 | 10221.5 | 2108.8 | 1890.9 | 10215.5 | 8492.1 | 1404.9 | 987.8 | 1699.1 | 1896.4 | 1852.2 |
| Mean | 43.3 | 162 | 330 | 68.0 | 65.2 | 330 | 283 | 45.3 | 32.9 | 54.8 | 61.2 | 61.7 |
| Max | 63.2 | 1930 | 3900 | 306 | 191 | 2890 | 3660 | 225 | 38.7 | 65.9 | 68.4 | 68.7 |
| Min | 36.0 | 39.6 | 40.2 | 55.4 | 34.0 | 22.3 | 23.4 | 36.4 | 26.8 | 26.8 | 45.3 | 44.9 |
| Acre-Ft | 2660 | 9620 | 20270 | 4180 | 3750 | 20260 | 16840 | 2790 | 1960 | 3370 | 3760 | 3670 |

| | | | | | | | | | | | | |
|---|---|---|---|---|---|---|---|---|---|---|---|---|
| Wtr Year 2020 | Total | 46961.8 | Mean | 128 | Max | 3900 | Min | 22.3 | Inst Max | 21100 | Acre-Ft | 93150 |
| Cal Year 2019 | Total | 92359.5 | Mean | 253 | Max | 4460 | Min | 36.0 | Inst Max | 34500 | Acre-Ft | 183200 |

# RUNOFF – DAILY DISCHARGE

Los Angeles County Dept of Public Works USDAY V115 Output 04/20/2021

Summary Report

Site: F130 Malibu Creek Below Cold Creek
USGS #:
Beginning Date: 10/01/2019
Ending Date: 09/30/2020

Daily Mean Discharge in Cubic feet/second Water Year Oct 2019 to Sep 2020

| Day | OCT | NOV | DEC | JAN | FEB | MAR | APR | MAY | JUN | JUL | AUG | SEP |
|---|---|---|---|---|---|---|---|---|---|---|---|---|
| 1 | 2.72 | 3.04 | 16.9 | 16.6 | 13.3 | 18.5 | 31.4 | 18.6 | 6.17 | 7.29 | 5.24 | 3.08 |
| 2 | 2.61 | 3.14 | 12.6 | 19.5 | 15.6 | 15.1 | 29.6 | 16.3 | 5.86 | 7.39 | 5.24 | 2.99 |
| 3 | 2.46 | 3.20 | 14.0 | 18.5 | 14.6 | 15.6 | 30.2 | 14.3 | 5.88 | 7.24 | 5.20 | 2.87 |
| 4 | 2.47 | 3.19 | 201 | 13.5 | 14.7 | 13.7 | 28.0 | 12.6 | 5.79 | 7.03 | 5.23 | 2.80 |
| 5 | 2.44 | 3.12 | 57.8 | 18.2 | 13.6 | 14.5 | 32.0 | 11.3 | 5.67 | 6.87 | 5.33 | 2.75 |
| 6 | 2.41 | 3.12 | 20.3 | 14.3 | 12.7 | 13.5 | 383 | 10.5 | 5.67 | 6.61 | 5.38 | 2.62 |
| 7 | 2.40 | 3.19 | 20.5 | 14.6 | 12.5 | 17.5 | 154 | 9.96 | 5.71 | 6.51 | 5.26 | 2.56 |
| 8 | 2.38 | 3.26 | 21.5 | 13.7 | 13.1 | 19.7 | 160 | 9.51 | 5.33 | 6.67 | 5.20 | 2.70 |
| 9 | 2.39 | 3.36 | 29.1 | 13.3 | 14.1 | 19.5 | 233 | 9.23 | 4.94 | 6.67 | 5.12 | 2.88 |
| 10 | 2.39 | 3.45 | 16.4 | 15.0 | 14.3 | 37.1 | 287 | 9.28 | 4.58 | 6.47 | 5.07 | 2.84 |
| 11 | 2.31 | 3.69 | 13.0 | 14.6 | 12.5 | 44.6 | 154 | 9.09 | 6.98 | 6.47 | 5.05 | 2.89 |
| 12 | 2.29 | 3.72 | 13.6 | 17.7 | 12.2 | 139 | 109 | 8.75 | 8.76 | 6.50 | 4.92 | 2.93 |
| 13 | 2.36 | 3.69 | 13.7 | 13.1 | 13.1 | 324 | 91.7 | 8.80 | 8.67 | 6.05 | 4.95 | 2.90 |
| 14 | 2.38 | 3.67 | 12.8 | 14.6 | 12.3 | 89.8 | 63.6 | 8.71 | 8.62 | 6.04 | 5.00 | 2.85 |
| 15 | 2.44 | 3.77 | 12.0 | 16.3 | 13.6 | 52.6 | 41.1 | 8.78 | 8.77 | 6.05 | 4.83 | 2.77 |
| 16 | 2.50 | 6.39 | 11.9 | 17.8 | 14.5 | 190 | 34.6 | 8.48 | 8.81 | 6.03 | 4.95 | 2.73 |
| 17 | 2.59 | 5.06 | 9.83 | 31.2 | 13.8 | 194 | 32.0 | 8.30 | 8.66 | 5.93 | 4.71 | 2.65 |
| 18 | 2.59 | 3.96 | 11.8 | 25.4 | 13.5 | 83.2 | 30.2 | 8.41 | 8.54 | 5.88 | 4.76 | 2.59 |
| 19 | 2.58 | 3.49 | 8.59 | 20.3 | 15.4 | 50.7 | 29.4 | 9.15 | 8.44 | 5.98 | 4.72 | 2.63 |
| 20 | 2.50 | 3.64 | 11.9 | 16.4 | 14.5 | 32.7 | 29.0 | 8.41 | 8.41 | 5.86 | 3.34 | 2.61 |
| 21 | 2.46 | 11.1 | 8.88 | 18.0 | 14.7 | 31.9 | 28.2 | 8.52 | 8.36 | 5.76 | 2.58 | 2.62 |
| 22 | 2.51 | 6.27 | 35.4 | 21.6 | 17.6 | 68.6 | 27.3 | 7.74 | 8.32 | 5.77 | 2.61 | 2.64 |
| 23 | 2.55 | 7.87 | 361 | 15.5 | 36.1 | 267 | 27.2 | 7.59 | 8.29 | 5.72 | 2.61 | 2.61 |
| 24 | 2.65 | 8.60 | 43.1 | 16.9 | 19.5 | 93.2 | 26.9 | 7.51 | 8.13 | 5.71 | 2.67 | 2.60 |
| 25 | 2.73 | 6.31 | 33.9 | 16.9 | 16.6 | 57.4 | 26.6 | 7.05 | 7.95 | 5.64 | 2.68 | 2.60 |
| 26 | 2.87 | 7.42 | 680 | 19.4 | 15.6 | 48.9 | 27.0 | 6.82 | 7.84 | 5.55 | 2.64 | 2.64 |
| 27 | 2.86 | 38.2 | 108 | 15.2 | 14.4 | 36.4 | 26.2 | 6.47 | 7.70 | 5.47 | 2.67 | 2.71 |
| 28 | 2.92 | 78.0 | 51.6 | 15.9 | 13.9 | 36.7 | 24.9 | 6.24 | 7.69 | 5.48 | 2.65 | 2.72 |
| 29 | 3.03 | 81.7 | 32.1 | 15.5 | 14.5 | 31.4 | 23.4 | 6.40 | 7.56 | 5.48 | 2.71 | 2.65 |
| 30 | 3.04 | 24.4 | 25.6 | 15.0 | ------ | 35.4 | 21.9 | 6.60 | 7.40 | 5.55 | 2.79 | 2.61 |
| 31 | 2.95 | ------ | 24.1 | 13.1 | ------ | 28.1 | ------ | 6.58 | ------ | 5.38 | 3.00 | ------ |
| Total | 79.78 | 343.02 | 1932.90 | 527.6 | 436.8 | 2120.3 | 2242.4 | 285.98 | 219.50 | 191.05 | 129.11 | 82.04 |
| Mean | 2.57 | 11.4 | 62.4 | 17.0 | 15.1 | 68.4 | 74.7 | 9.23 | 7.32 | 6.16 | 4.16 | 2.73 |
| Max | 3.04 | 81.7 | 680 | 31.2 | 36.1 | 324 | 383 | 18.6 | 8.81 | 7.39 | 5.38 | 3.08 |
| Min | 2.29 | 3.04 | 8.59 | 13.1 | 12.2 | 13.5 | 21.9 | 6.24 | 4.58 | 5.38 | 2.58 | 2.56 |
| Acre-Ft | 158 | 680 | 3830 | 1050 | 866 | 4210 | 4450 | 567 | 435 | 379 | 256 | 163 |

| | | | | | | | | | | | | |
|---|---|---|---|---|---|---|---|---|---|---|---|---|
| Wtr Year 2020 | Total | 8590.48 | Mean | 23.5 | Max | 680 | Min | 2.29 | Inst Max | 2100 | Acre-Ft | 17040 |
| Cal Year 2019 | Total | 20492.15 | Mean | 56.1 | Max | 1590 | Min | 1.75 | Inst Max | 7940 | Acre-Ft | 40650 |

# RUNOFF – DAILY DISCHARGE

Los Angeles County Dept of Public Works USDAY V115 Output 04/20/2021

Summary Report

Site: F395 Mescal Creek near Pinon Hills
USGS #:
Beginning Date: 10/01/2019
Ending Date: 09/30/2020

Daily Mean Discharge in Cubic feet/second Water Year Oct 2019 to Sep 2020

| Day | OCT | NOV | DEC | JAN | FEB | MAR | APR | MAY | JUN | JUL | AUG | SEP |
|---|---|---|---|---|---|---|---|---|---|---|---|---|
| 1 | 0 | 0 | 0 | .63 | .56 | .89 | 4.21 | 5.06 | 3.67 | 1.66 | .37 | .02 |
| 2 | 0 | 0 | 0 | .64 | .57 | 1.49 | 4.57 | 4.90 | 3.55 | 1.63 | .35 | 0 |
| 3 | 0 | 0 | 0 | .64 | .69 | 2.48 | 4.70 | 4.76 | 3.46 | 1.58 | .34 | 0 |
| 4 | 0 | 0 | .87 | .63 | .16 | 2.45 | 4.52 | 4.57 | 3.36 | 1.54 | .32 | 0 |
| 5 | 0 | 0 | .50 | .58 | .22 | 2.46 | 4.60 | 4.44 | 3.33 | 1.47 | .34 | 0 |
| 6 | 0 | 0 | .20 | .73 | .13 | 2.51 | 6.48 | 4.40 | 3.31 | 1.43 | .28 | 0 |
| 7 | 0 | 0 | 1.95 | .69 | .24 | 2.58 | 6.68 | 4.30 | 3.24 | 1.38 | .25 | 0 |
| 8 | 0 | 0 | 1.94 | .51 | .31 | 2.60 | 6.63 | 4.14 | 3.21 | 1.35 | .21 | 0 |
| 9 | 0 | 0 | 1.39 | .58 | .37 | 2.61 | 6.45 | 4.07 | 3.11 | 1.27 | .17 | 0 |
| 10 | 0 | 0 | 1.16 | .53 | .40 | 3.93 | 6.67 | 3.91 | 2.97 | 1.20 | .13 | 0 |
| 11 | 0 | 0 | 1.01 | .23 | .45 | 4.04 | 7.38 | 3.97 | 2.87 | 1.11 | .11 | 0 |
| 12 | 0 | 0 | .37 | .23 | .41 | 6.92 | 7.25 | 4.13 | 2.82 | 1.13 | .10 | 0 |
| 13 | 0 | 0 | .16 | .21 | .43 | 6.83 | 9.21 | 4.24 | 2.81 | 1.11 | .07 | 0 |
| 14 | 0 | 0 | .65 | .21 | .39 | 6.45 | 8.50 | 4.57 | 2.72 | 1.16 | .06 | 0 |
| 15 | 0 | 0 | .49 | .26 | .40 | 6.26 | 4.26 | 5.07 | 2.60 | .92 | .08 | 0 |
| 16 | 0 | 0 | 1.15 | .36 | .41 | 6.17 | 9.07 | 4.82 | 2.40 | .75 | .08 | 0 |
| 17 | 0 | 0 | .88 | .49 | .46 | 6.08 | 9.30 | 4.68 | 2.40 | .72 | .04 | 0 |
| 18 | 0 | 0 | 1.08 | .44 | .48 | 6.04 | 8.79 | 4.86 | 2.40 | .71 | .06 | 0 |
| 19 | 0 | 0 | 1.03 | .44 | .49 | 5.38 | 8.44 | 4.90 | 2.32 | .67 | .42 | 0 |
| 20 | 0 | 0 | .65 | .47 | .51 | 5.28 | 8.27 | 4.76 | 2.27 | .65 | .35 | 0 |
| 21 | 0 | 0 | .74 | .49 | .52 | 5.20 | 8.77 | 4.69 | 2.24 | .54 | .25 | 0 |
| 22 | 0 | 0 | .54 | .52 | .54 | 5.45 | 8.30 | 4.63 | 2.21 | .56 | .19 | 0 |
| 23 | 0 | 0 | .75 | .54 | .53 | 7.55 | 8.52 | 4.62 | 2.06 | .62 | .16 | 0 |
| 24 | 0 | 0 | .78 | .55 | .55 | 4.16 | 8.45 | 4.51 | 1.96 | .61 | .13 | 0 |
| 25 | 0 | 0 | .80 | .57 | .56 | 4.01 | 7.50 | 4.32 | 1.89 | .58 | .10 | 0 |
| 26 | 0 | 0 | .29 | .58 | .56 | 4.11 | 8.51 | 4.06 | 1.86 | .56 | .08 | 0 |
| 27 | 0 | 0 | .12 | .61 | .57 | 3.98 | 8.15 | 3.75 | 1.78 | .52 | .07 | 0 |
| 28 | 0 | 0 | .13 | .63 | .57 | 3.86 | 6.67 | 3.81 | 1.75 | .50 | .06 | 0 |
| 29 | 0 | 0 | .11 | .60 | .58 | 3.81 | 5.38 | 3.99 | 1.78 | .44 | .04 | 0 |
| 30 | 0 | 0 | .81 | .80 | ------ | 3.71 | 5.20 | 3.92 | 1.73 | .39 | .04 | 0 |
| 31 | 0 | ------ | 1.27 | .55 | ------ | 3.83 | ------ | 3.81 | ------ | .39 | .03 | ------ |
| Total | 0 | 0 | 21.82 | 15.94 | 13.06 | 133.12 | 211.43 | 136.66 | 78.08 | 29.15 | 5.28 | 0.02 |
| Mean | 0 | 0 | .70 | .51 | .45 | 4.29 | 7.05 | 4.41 | 2.60 | .94 | .17 | .001 |
| Max | 0 | 0 | 1.95 | .80 | .69 | 7.55 | 9.30 | 5.07 | 3.67 | 1.66 | .42 | .02 |
| Min | 0 | 0 | 0 | .21 | .13 | .89 | 4.21 | 3.75 | 1.73 | .39 | .03 | 0 |
| Acre-Ft | 0 | 0 | 43 | 32 | 26 | 264 | 419 | 271 | 155 | 58 | 10 | .04 |

| | | | | | | | | | | | | |
|---|---|---|---|---|---|---|---|---|---|---|---|---|
| Wtr Year 2020 | Total | 644.56 | Mean | 1.76 | Max | 9.30 | Min | 0 | Inst Max | 16.0 | Acre-Ft | 1280 |
| Cal Year 2019 | Total | 881.37 | Mean | 2.41 | Max | 82.0 | Min | 0 | Inst Max | 140 | Acre-Ft | 1750 |

# RUNOFF – DAILY DISCHARGE

Los Angeles County Dept of Public Works USDAY V115 Output 04/20/2021

Summary Report

Site: F328B Mint Canyon Creek at Sierra Highway
USGS #:
Beginning Date: 10/01/2019
Ending Date: 09/30/2020

Daily Mean Discharge in Cubic feet/second Water Year Oct 2019 to Sep 2020

| Day | OCT | NOV | DEC | JAN | FEB | MAR | APR | MAY | JUN | JUL | AUG | SEP |
|---|---|---|---|---|---|---|---|---|---|---|---|---|
| 1 | 0 | 0 | 0 | 0 | 0 | 0 | 0 | 0 | 0 | 0 | 0 | 0 |
| 2 | 0 | 0 | 0 | 0 | 0 | 0 | 0 | 0 | 0 | 0 | 0 | 0 |
| 3 | 0 | 0 | 0 | 0 | 0 | 0 | 0 | 0 | 0 | 0 | 0 | 0 |
| 4 | 0 | 0 | 1.37 | 0 | 0 | 0 | 0 | 0 | 0 | 0 | 0 | 0 |
| 5 | 0 | 0 | 0 | 0 | 0 | 0 | 0 | 0 | 0 | 0 | 0 | 0 |
| 6 | 0 | 0 | 0 | 0 | 0 | 0 | 9.17 | 0 | 0 | 0 | 0 | 0 |
| 7 | 0 | 0 | 0 | 0 | 0 | 0 | 1.17 | 0 | 0 | 0 | 0 | 0 |
| 8 | 0 | 0 | .21 | 0 | 0 | 0 | .09 | 0 | 0 | 0 | 0 | 0 |
| 9 | 0 | 0 | 0 | 0 | 0 | 0 | .54 | 0 | 0 | 0 | 0 | 0 |
| 10 | 0 | 0 | 0 | 0 | 0 | 0 | .44 | 0 | 0 | 0 | 0 | 0 |
| 11 | 0 | 0 | 0 | 0 | 0 | 0 | 0 | 0 | 0 | 0 | 0 | 0 |
| 12 | 0 | 0 | 0 | 0 | 0 | 1.72 | 0 | 0 | 0 | 0 | 0 | 0 |
| 13 | 0 | 0 | 0 | 0 | 0 | 1.40 | 0 | 0 | 0 | 0 | 0 | 0 |
| 14 | 0 | 0 | 0 | 0 | 0 | .06 | 0 | 0 | 0 | 0 | 0 | 0 |
| 15 | 0 | 0 | 0 | 0 | 0 | .06 | 0 | 0 | 0 | 0 | 0 | 0 |
| 16 | 0 | 0 | 0 | 0 | 0 | 1.94 | 0 | 0 | 0 | 0 | 0 | 0 |
| 17 | 0 | 0 | 0 | 0 | 0 | 0 | 0 | 0 | 0 | 0 | 0 | 0 |
| 18 | 0 | 0 | 0 | 0 | 0 | 0 | 0 | 0 | 0 | 0 | 0 | 0 |
| 19 | 0 | 0 | 0 | 0 | 0 | .07 | 0 | 0 | 0 | 0 | 0 | 0 |
| 20 | 0 | 0 | 0 | 0 | 0 | 0 | 0 | 0 | 0 | 0 | 0 | 0 |
| 21 | 0 | 0 | 0 | 0 | 0 | 0 | 0 | 0 | 0 | 0 | 0 | 0 |
| 22 | 0 | 0 | 0 | 0 | 0 | .20 | 0 | 0 | 0 | 0 | 0 | 0 |
| 23 | 0 | 0 | .08 | 0 | 0 | .26 | 0 | 0 | 0 | 0 | 0 | 0 |
| 24 | 0 | 0 | 0 | 0 | 0 | 0 | 0 | 0 | 0 | 0 | 0 | 0 |
| 25 | 0 | 0 | .96 | 0 | 0 | 0 | 0 | 0 | 0 | 0 | 0 | 0 |
| 26 | 0 | 0 | 18.8 | 0 | 0 | 0 | 0 | 0 | 0 | 0 | 0 | 0 |
| 27 | 0 | .06 | 0 | 0 | 0 | 0 | 0 | 0 | 0 | 0 | 0 | 0 |
| 28 | 0 | .63 | 0 | 0 | 0 | 0 | 0 | 0 | 0 | 0 | 0 | 0 |
| 29 | 0 | .01 | 0 | 0 | 0 | 0 | 0 | 0 | 0 | 0 | 0 | 0 |
| 30 | 0 | 0 | 0 | 0 | ------ | 0 | 0 | 0 | 0 | 0 | 0 | 0 |
| 31 | 0 | ------ | 0 | 0 | ------ | 0 | ------ | 0 | ------ | 0 | 0 | ------ |
| Total | 0 | 0.70 | 21.42 | 0 | 0 | 5.71 | 11.41 | 0 | 0 | 0 | 0 | 0 |
| Mean | 0 | .023 | .69 | 0 | 0 | .18 | .38 | 0 | 0 | 0 | 0 | 0 |
| Max | 0 | .63 | 18.8 | 0 | 0 | 1.94 | 9.17 | 0 | 0 | 0 | 0 | 0 |
| Min | 0 | 0 | 0 | 0 | 0 | 0 | 0 | 0 | 0 | 0 | 0 | 0 |
| Acre-Ft | 0 | 1.4 | 42 | 0 | 0 | 11 | 23 | 0 | 0 | 0 | 0 | 0 |

| | | | | | | | | | | | | |
|---|---|---|---|---|---|---|---|---|---|---|---|---|
| Wtr Year 2020 | Total | 39.24 | Mean | .11 | Max | 18.8 | Min | 0 | Inst Max | 187 | Acre-Ft | 78 |
| Cal Year 2019 | Total | 95.89 | Mean | .26 | Max | 20.7 | Min | 0 | Inst Max | 483 | Acre-Ft | 190 |

# RUNOFF – DAILY DISCHARGE

Los Angeles County Dept of Public Works USDAY V115 Output 04/20/2021

Summary Report

Site: F181 Montebello Storm Drain Above Rio Hondo
USGS #:
Beginning Date: 10/01/2019
Ending Date: 09/30/2020

Daily Mean Discharge in Cubic feet/second Water Year Oct 2019 to Sep 2020

| Day | OCT | NOV | DEC | JAN | FEB | MAR | APR | MAY | JUN | JUL | AUG | SEP |
|---|---|---|---|---|---|---|---|---|---|---|---|---|
| 1 | .39 | .90 | .34 | .14 | 1.03 | .85 | .72 | .65 | .52 | .24 | 0 | 0 |
| 2 | .28 | .90 | .34 | .14 | 1.03 | .84 | .72 | .65 | .52 | .22 | 0 | 0 |
| 3 | .26 | .90 | .33 | .13 | 1.03 | .83 | .73 | .64 | .52 | .20 | 0 | 0 |
| 4 | .26 | .75 | .32 | .12 | 1.03 | .82 | .73 | .63 | .52 | .19 | 0 | 0 |
| 5 | .26 | .52 | .32 | .12 | 1.03 | .81 | .74 | .63 | .52 | .17 | 0 | 0 |
| 6 | .26 | .52 | .31 | .11 | 1.03 | .79 | .74 | .62 | .52 | .15 | 0 | 0 |
| 7 | .26 | .52 | .30 | .11 | 1.03 | .78 | .75 | .61 | .52 | .14 | 0 | 0 |
| 8 | .26 | .52 | .30 | .10 | 1.03 | .77 | .75 | .61 | .52 | .12 | 0 | 0 |
| 9 | .26 | .52 | .29 | .09 | 1.03 | .76 | .76 | .60 | .52 | .10 | 0 | 0 |
| 10 | .26 | .52 | .28 | .09 | 1.03 | .75 | .76 | .59 | .52 | .08 | 0 | 0 |
| 11 | .26 | .52 | .28 | .08 | 1.03 | .73 | .77 | .59 | .52 | .07 | 0 | 0 |
| 12 | .26 | .52 | .27 | .07 | 1.03 | .72 | .77 | .58 | .52 | .05 | 0 | 0 |
| 13 | .16 | .52 | .27 | .07 | 1.03 | .71 | .77 | .57 | .52 | .03 | 0 | 0 |
| 14 | .13 | .52 | .26 | .06 | 1.03 | .70 | .76 | .57 | .52 | .02 | 0 | 0 |
| 15 | .13 | .45 | .25 | .05 | 1.03 | .69 | .76 | .56 | .51 | 0 | 0 | 0 |
| 16 | .13 | .37 | .25 | .05 | 1.02 | .67 | .75 | .55 | .49 | 0 | 0 | 0 |
| 17 | .13 | .35 | .24 | .04 | 1.01 | .66 | .74 | .55 | .47 | 0 | 0 | 0 |
| 18 | .13 | .35 | .23 | .03 | .99 | .65 | .74 | .54 | .46 | 0 | 0 | 0 |
| 19 | .13 | .28 | .23 | .03 | .98 | .65 | .73 | .53 | .44 | 0 | 0 | 0 |
| 20 | .13 | .33 | .22 | .02 | .97 | .65 | .72 | .53 | .42 | 0 | 0 | 0 |
| 21 | .69 | .39 | .21 | .01 | .96 | .66 | .72 | .52 | .40 | 0 | 0 | 0 |
| 22 | 1.29 | .39 | .21 | .01 | .95 | .66 | .71 | .52 | .39 | 0 | 0 | 0 |
| 23 | 1.29 | .39 | .20 | .19 | .94 | .67 | .70 | .52 | .37 | 0 | 0 | 0 |
| 24 | 1.29 | .53 | .19 | 1.03 | .92 | .67 | .70 | .52 | .35 | 0 | 0 | 0 |
| 25 | 1.05 | .38 | .19 | 1.03 | .91 | .68 | .69 | .52 | .34 | 0 | 0 | 0 |
| 26 | 1.03 | .37 | .18 | 1.03 | .90 | .69 | .68 | .52 | .32 | 0 | 0 | 0 |
| 27 | 1.03 | .37 | .18 | 1.03 | .89 | .69 | .68 | .52 | .30 | 0 | 0 | 0 |
| 28 | 1.03 | .36 | .17 | 1.03 | .88 | .70 | .67 | .52 | .29 | 0 | 0 | 0 |
| 29 | 1.01 | .36 | .16 | 1.03 | .86 | .70 | .66 | .52 | .27 | 0 | 0 | 0 |
| 30 | .90 | .35 | .16 | 1.03 | ------ | .71 | .66 | .52 | .25 | 0 | 0 | 0 |
| 31 | .90 | ------ | .15 | 1.03 | ------ | .71 | ------ | .52 | ------ | 0 | 0 | ------ |
| Total | 15.85 | 14.67 | 7.63 | 10.10 | 28.63 | 22.37 | 21.78 | 17.52 | 13.35 | 1.78 | 0 | 0 |
| Mean | .51 | .49 | .25 | .33 | .99 | .72 | .73 | .57 | .45 | .057 | 0 | 0 |
| Max | 1.29 | .90 | .34 | 1.03 | 1.03 | .85 | .77 | .65 | .52 | .24 | 0 | 0 |
| Min | .13 | .28 | .15 | .01 | .86 | .65 | .66 | .52 | .25 | 0 | 0 | 0 |
| Acre-Ft | 31 | 29 | 15 | 20 | 57 | 44 | 43 | 35 | 26 | 3.5 | 0 | 0 |

| | | | | | | | | | | | | |
|---|---|---|---|---|---|---|---|---|---|---|---|---|
| Wtr Year 2020 | Total | 153.68 | Mean | .42 | Max | 1.29 | Min | 0 | Inst Max | 8.34 | Acre-Ft | 305 |
| Cal Year 2019 | Total | 335.95 | Mean | .92 | Max | 25.3 | Min | 0 | Inst Max | 519 | Acre-Ft | 666 |

# RUNOFF – DAILY DISCHARGE

Los Angeles County Dept of Public Works USDAY V115 Output 04/20/2021

Summary Report

Site: F118C Pacoima Creek below Pacoima Dam
USGS #:
Beginning Date: 10/01/2019
Ending Date: 09/30/2020

Daily Mean Discharge in Cubic feet/second Water Year Oct 2019 to Sep 2020

| Day | OCT | NOV | DEC | JAN | FEB | MAR | APR | MAY | JUN | JUL | AUG | SEP |
|---|---|---|---|---|---|---|---|---|---|---|---|---|
| 1 | 0 | 0 | 0 | 0 | 0 | 0 | 49.4 | 45.5 | 0 | 0 | 0 | 0 |
| 2 | 0 | 0 | 0 | 0 | 0 | 0 | 27.5 | 41.0 | 0 | 0 | 0 | 0 |
| 3 | 0 | 0 | 0 | 0 | 29.0 | 0 | 0 | 44.8 | 0 | 0 | 0 | 0 |
| 4 | 0 | 0 | 0 | 0 | 44.8 | 0 | 0 | 27.3 | 0 | 0 | 0 | 0 |
| 5 | 0 | 0 | 0 | 0 | 23.4 | 0 | 2.91 | 6.98 | 0 | 0 | 0 | 0 |
| 6 | 0 | 0 | 0 | 0 | 0 | 0 | 37.9 | 0 | 0 | 0 | 0 | 0 |
| 7 | 0 | 3.68 | 0 | 0 | 0 | 0 | 32.9 | 0 | 0 | 0 | 0 | 0 |
| 8 | 0 | 0 | 0 | 0 | 0 | 0 | 49.1 | 0 | 0 | 0 | 0 | 0 |
| 9 | 0 | 0 | 0 | 0 | 0 | 0 | 69.3 | 0 | 0 | 0 | 0 | 0 |
| 10 | 0 | 0 | 0 | 0 | 0 | .07 | 73.2 | 0 | 0 | 0 | 0 | 0 |
| 11 | 0 | 0 | 0 | 0 | 0 | 0 | 75.1 | 0 | 0 | 0 | 0 | 0 |
| 12 | 0 | 0 | 0 | 0 | 0 | 4.48 | 68.8 | 0 | 0 | 0 | 0 | 0 |
| 13 | 0 | 0 | 0 | 0 | 0 | 2.15 | 64.3 | 0 | 0 | 0 | 23.0 | 0 |
| 14 | 0 | 0 | 0 | 0 | 0 | 0 | 63.4 | 0 | 0 | 0 | 34.5 | 0 |
| 15 | 0 | 0 | 0 | 0 | 0 | .37 | 63.7 | 0 | 0 | 0 | 35.2 | 0 |
| 16 | 0 | 0 | 0 | .07 | 0 | 2.62 | 68.4 | 0 | 0 | 0 | 35.4 | 0 |
| 17 | 0 | 0 | 0 | .27 | 0 | 0 | 71.5 | 0 | 0 | 0 | 41.2 | 0 |
| 18 | 0 | 0 | 0 | 0 | 0 | 0 | 73.5 | 2.75 | 0 | 0 | 43.6 | 0 |
| 19 | 0 | 0 | 0 | 0 | 0 | 0 | 73.8 | 0 | 0 | 0 | 15.2 | 0 |
| 20 | 0 | 0 | 0 | 0 | 0 | 0 | 77.4 | 0 | 0 | 0 | 0 | 0 |
| 21 | 0 | 0 | 0 | 0 | 0 | 0 | 78.5 | 0 | 0 | 0 | 0 | 0 |
| 22 | 0 | 0 | .05 | 0 | 0 | 1.97 | 74.2 | 0 | 0 | 0 | 0 | 0 |
| 23 | 0 | 0 | 1.63 | 0 | 0 | 0 | 73.5 | 0 | 0 | 0 | 0 | 0 |
| 24 | 0 | 0 | 0 | 0 | 0 | 0 | 71.1 | 0 | 0 | 0 | 0 | 0 |
| 25 | 0 | 0 | 1.06 | 0 | 0 | 0 | 74.2 | 0 | 0 | 0 | 0 | 0 |
| 26 | 0 | 0 | 4.07 | 0 | 0 | 0 | 68.5 | 0 | 0 | 0 | 0 | 0 |
| 27 | 0 | 0 | 0 | 0 | 0 | 0 | 64.7 | 0 | 0 | 0 | 0 | 0 |
| 28 | 0 | 0 | 0 | 0 | 0 | 0 | 54.8 | 0 | 0 | 0 | 0 | 0 |
| 29 | 0 | 0 | 0 | 0 | 0 | 0 | 61.7 | 0 | 0 | 0 | 0 | 0 |
| 30 | 0 | 0 | 0 | 0 | ------ | 0 | 57.1 | 0 | 0 | 0 | 0 | 0 |
| 31 | 0 | ------ | 0 | 0 | ------ | 35.7 | ------ | 0 | ------ | 0 | 0 | ------ |
| Total | 0 | 3.68 | 6.81 | 0.34 | 97.2 | 47.36 | 1720.41 | 168.33 | 0 | 0 | 228.1 | 0 |
| Mean | 0 | .12 | .22 | .011 | 3.35 | 1.53 | 57.3 | 5.43 | 0 | 0 | 7.36 | 0 |
| Max | 0 | 3.68 | 4.07 | .27 | 44.8 | 35.7 | 78.5 | 45.5 | 0 | 0 | 43.6 | 0 |
| Min | 0 | 0 | 0 | 0 | 0 | 0 | 0 | 0 | 0 | 0 | 0 | 0 |
| Acre-Ft | 0 | 7.3 | 14 | .67 | 193 | 94 | 3410 | 334 | 0 | 0 | 452 | 0 |

| | | | | | | | | | | | | |
|---|---|---|---|---|---|---|---|---|---|---|---|---|
| Wtr Year 2020 | Total | 2272.23 | Mean | 6.21 | Max | 78.5 | Min | 0 | Inst Max | 275 | Acre-Ft | 4510 |
| Cal Year 2019 | Total | 8133.21 | Mean | 22.3 | Max | 410 | Min | 0 | Inst Max | 590 | Acre-Ft | 16130 |

# RUNOFF – DAILY DISCHARGE

Los Angeles County Dept of Public Works USDAY V115 Output 04/20/2021

Summary Report

Site: F305 Pacoima Diversion at Branford Street
USGS #:
Beginning Date: 10/01/2019
Ending Date: 09/30/2020

Daily Mean Discharge in Cubic feet/second Water Year Oct 2019 to Sep 2020

| Day | OCT | NOV | DEC | JAN | FEB | MAR | APR | MAY | JUN | JUL | AUG | SEP |
|---|---|---|---|---|---|---|---|---|---|---|---|---|
| 1 | .81 | .10 | 1.12 | .88 | .75 | .78 | 4.73 | .56 | 1.60 | .80 | .74 | .77 |
| 2 | .76 | .10 | .89 | .80 | .78 | .80 | 1.31 | .49 | 1.07 | .76 | .75 | .85 |
| 3 | .62 | .10 | .85 | .74 | .99 | .62 | .74 | .57 | .77 | .80 | .75 | .74 |
| 4 | .60 | .10 | 68.0 | .61 | .63 | .72 | .83 | 1.37 | .84 | .81 | .74 | .86 |
| 5 | .52 | .10 | .94 | .60 | 2.82 | .76 | 13.5 | .95 | .98 | .72 | .83 | .80 |
| 6 | .46 | .10 | 3.10 | .60 | .67 | .75 | 205 | .75 | .90 | .79 | 1.31 | .84 |
| 7 | .40 | .18 | 17.0 | .51 | .63 | .73 | 94.4 | .82 | .73 | .80 | .87 | .76 |
| 8 | .40 | .20 | 50.0 | .78 | .73 | .74 | 21.1 | .92 | .62 | .79 | .75 | 1.06 |
| 9 | .38 | .20 | .90 | .69 | .94 | .75 | 91.1 | 1.08 | .67 | 1.92 | .77 | 1.65 |
| 10 | .30 | .20 | .80 | .60 | .74 | 7.76 | 40.3 | 1.08 | .68 | .69 | .79 | 1.05 |
| 11 | .21 | .20 | .73 | .59 | .71 | 1.74 | .94 | .95 | .73 | .72 | .80 | .91 |
| 12 | .20 | .20 | .66 | .50 | .72 | 42.2 | 2.65 | .87 | .78 | .72 | .88 | .80 |
| 13 | .10 | .20 | .60 | .50 | .80 | 32.2 | 1.01 | .87 | 1.11 | .74 | 2.57 | .75 |
| 14 | .04 | .20 | .60 | .41 | .80 | 33.9 | .88 | .82 | 1.02 | .68 | 1.68 | .76 |
| 15 | 0 | .20 | .54 | .40 | .74 | 20.3 | 3.85 | .81 | .82 | .81 | 1.32 | .77 |
| 16 | 0 | .20 | 1.18 | 8.20 | .74 | 32.6 | .61 | 1.04 | .88 | 3.16 | 1.44 | .74 |
| 17 | 0 | .20 | .83 | 24.1 | .76 | 9.82 | .75 | .97 | .76 | .80 | 1.37 | .81 |
| 18 | 0 | .20 | 1.00 | .73 | .77 | .81 | 14.6 | 25.7 | .98 | .89 | 2.06 | .71 |
| 19 | .02 | .25 | .97 | .60 | .81 | 3.53 | .88 | 1.05 | .70 | .85 | 2.43 | .70 |
| 20 | .10 | .32 | 1.56 | .69 | .85 | 1.03 | .84 | .92 | .79 | .77 | .76 | .74 |
| 21 | .10 | .22 | 1.55 | .81 | .78 | .73 | .73 | .84 | .77 | .85 | .77 | .74 |
| 22 | .10 | .20 | 11.7 | .78 | .84 | 52.3 | .72 | 1.43 | .81 | .85 | .76 | .75 |
| 23 | .10 | .20 | 16.9 | .77 | .84 | 4.48 | .66 | 1.91 | .82 | .94 | .79 | .73 |
| 24 | .10 | .20 | 2.08 | .72 | .76 | .92 | .59 | .99 | .87 | .81 | .82 | .72 |
| 25 | .10 | .73 | 30.5 | .64 | .72 | 1.05 | .59 | .87 | .89 | .77 | .88 | .77 |
| 26 | .10 | 1.60 | 187 | .72 | .72 | .82 | .67 | .82 | .81 | .79 | .78 | .73 |
| 27 | .10 | 31.0 | 2.16 | .65 | .71 | .75 | 3.45 | .82 | .92 | .81 | .78 | .74 |
| 28 | .10 | 74.0 | 2.07 | .62 | .71 | .80 | .63 | .79 | 1.12 | 1.26 | .72 | .85 |
| 29 | .10 | 5.61 | 1.73 | .69 | .81 | .84 | .68 | .91 | .91 | .95 | .74 | .78 |
| 30 | .10 | 4.29 | 1.49 | .70 | ------ | .78 | .67 | .84 | .81 | 1.13 | .76 | .73 |
| 31 | .10 | ------ | 1.27 | .76 | ------ | 1.27 | ------ | 1.29 | ------ | .86 | .73 | ------ |
| Total | 7.02 | 121.60 | 410.72 | 51.39 | 24.27 | 257.28 | 509.41 | 54.10 | 26.16 | 29.04 | 32.14 | 24.61 |
| Mean | .23 | 4.05 | 13.2 | 1.66 | .84 | 8.30 | 17.0 | 1.75 | .87 | .94 | 1.04 | .82 |
| Max | .81 | 74.0 | 187 | 24.1 | 2.82 | 52.3 | 205 | 25.7 | 1.60 | 3.16 | 2.57 | 1.65 |
| Min | 0 | .10 | .54 | .40 | .63 | .62 | .59 | .49 | .62 | .68 | .72 | .70 |
| Acre-Ft | 14 | 241 | 815 | 102 | 48 | 510 | 1010 | 107 | 52 | 58 | 64 | 49 |

| | | | | | | | | | | | | |
|---|---|---|---|---|---|---|---|---|---|---|---|---|
| Wtr Year 2020 | Total | 1547.74 | Mean | 4.23 | Max | 205 | Min | 0 | Inst Max | 1720 | Acre-Ft | 3070 |
| Cal Year 2019 | Total | 4918.86 | Mean | 13.5 | Max | 468 | Min | 0 | Inst Max | 1720 | Acre-Ft | 9760 |

# RUNOFF – DAILY DISCHARGE

Los Angeles County Dept of Public Works USDAY V115 Output 04/20/2021

Summary Report

Site: F122 Pallett Creek at Big Rock Creek Near Valyermo
USGS #:
Beginning Date: 10/01/2019
Ending Date: 09/30/2020

Daily Mean Discharge in Cubic feet/second Water Year Oct 2019 to Sep 2020

| Day | OCT | NOV | DEC | JAN | FEB | MAR | APR | MAY | JUN | JUL | AUG | SEP |
|---|---|---|---|---|---|---|---|---|---|---|---|---|
| 1 | .41 | .27 | .12 | 1.03 | .25 | .14 | .59 | 1.52 | .87 | .65 | .74 | .79 |
| 2 | .40 | .27 | .15 | .49 | .28 | .15 | .58 | 1.26 | .87 | .65 | .72 | 1.06 |
| 3 | .46 | .26 | .18 | .29 | .24 | .14 | .58 | 1.27 | .85 | .67 | .79 | 1.15 |
| 4 | .45 | .25 | .78 | .30 | .18 | .15 | .62 | 1.33 | .84 | .72 | .84 | 1.14 |
| 5 | .41 | .24 | .81 | .29 | .18 | .17 | .66 | 1.30 | .89 | .75 | .86 | 1.05 |
| 6 | .41 | .24 | .50 | .29 | .24 | .18 | 19.1 | 1.34 | .83 | .72 | .92 | 1.01 |
| 7 | .40 | .22 | .44 | .28 | .26 | .18 | 62.1 | 1.42 | .81 | .74 | .97 | .96 |
| 8 | .40 | .20 | .53 | .30 | .27 | .16 | 100 | 1.43 | .74 | .80 | .99 | .83 |
| 9 | .40 | .21 | .46 | .29 | .29 | .24 | 2.47 | 1.38 | .75 | .83 | 1.01 | .76 |
| 10 | .38 | .20 | .36 | .24 | .24 | 4.09 | 5.01 | 1.39 | .73 | .86 | .99 | .83 |
| 11 | .37 | .18 | .31 | .26 | .21 | 6.57 | 3.98 | 1.43 | .69 | .91 | .97 | .89 |
| 12 | .39 | .19 | .29 | .26 | .20 | 23.4 | 3.53 | 1.60 | .71 | .89 | 1.04 | .91 |
| 13 | .39 | .22 | .30 | .25 | .19 | 29.0 | 6.28 | 1.71 | .75 | .80 | 1.20 | .84 |
| 14 | .37 | .21 | .34 | .25 | .21 | 16.0 | 5.84 | 1.79 | .69 | .79 | 1.15 | .81 |
| 15 | .36 | .20 | .30 | .25 | .21 | 13.4 | 4.47 | 1.81 | .65 | .92 | 1.09 | .80 |
| 16 | .40 | .20 | .23 | .25 | .23 | 12.1 | 3.86 | 1.78 | .62 | .98 | 1.07 | .82 |
| 17 | .43 | .19 | .24 | .24 | .23 | 7.87 | 5.17 | 1.72 | .63 | .96 | 1.07 | .91 |
| 18 | .39 | .19 | .25 | .23 | .21 | .77 | 4.71 | 1.76 | .67 | .90 | 1.14 | .90 |
| 19 | .37 | .24 | .22 | .25 | .20 | .23 | 3.43 | 1.76 | .68 | .80 | 1.15 | 1.19 |
| 20 | .37 | .27 | .23 | .30 | .20 | .20 | 2.91 | 1.74 | .65 | .76 | 1.08 | 1.44 |
| 21 | .33 | .20 | .26 | .28 | .22 | .22 | 2.65 | 1.68 | .62 | .83 | .97 | 1.44 |
| 22 | .33 | .13 | .58 | .25 | .24 | .26 | 2.49 | 1.58 | .58 | .91 | .98 | 1.33 |
| 23 | .35 | .12 | 10.7 | .25 | .21 | .37 | 2.51 | 1.45 | .56 | .80 | 1.01 | 1.24 |
| 24 | .31 | .13 | 13.4 | .26 | .21 | .39 | 2.68 | 1.25 | .60 | .75 | .98 | 1.19 |
| 25 | .31 | .16 | 11.1 | .25 | .18 | .41 | 2.71 | 1.13 | .60 | .72 | .87 | 1.10 |
| 26 | .36 | .16 | 11.8 | .27 | .17 | .38 | 2.62 | 1.04 | .68 | .67 | .82 | 1.13 |
| 27 | .33 | .23 | 9.32 | .28 | .16 | .36 | 2.30 | .95 | .67 | .68 | .77 | 1.09 |
| 28 | .27 | .22 | 6.25 | .28 | .16 | .40 | 1.89 | .90 | .63 | .70 | .78 | .97 |
| 29 | .28 | .15 | 4.16 | .28 | .16 | .46 | 1.69 | .92 | .65 | .67 | .79 | .97 |
| 30 | .24 | .08 | 2.89 | .24 | ------ | .46 | 1.71 | .88 | .67 | .68 | .81 | .95 |
| 31 | .26 | ------ | 1.79 | .23 | ------ | .54 | ------ | .86 | ------ | .76 | .81 | ------ |
| Total | 11.33 | 6.03 | 79.29 | 9.21 | 6.23 | 119.39 | 259.14 | 43.38 | 21.18 | 24.27 | 29.38 | 30.50 |
| Mean | .37 | .20 | 2.56 | .30 | .21 | 3.85 | 8.64 | 1.40 | .71 | .78 | .95 | 1.02 |
| Max | .46 | .27 | 13.4 | 1.03 | .29 | 29.0 | 100 | 1.81 | .89 | .98 | 1.20 | 1.44 |
| Min | .24 | .08 | .12 | .23 | .16 | .14 | .58 | .86 | .56 | .65 | .72 | .76 |
| Acre-Ft | 22 | 12 | 157 | 18 | 12 | 237 | 514 | 86 | 42 | 48 | 58 | 60 |

| | | | | | | | | | | | | |
|---|---|---|---|---|---|---|---|---|---|---|---|---|
| Wtr Year 2020 | Total | 639.33 | Mean | 1.75 | Max | 100 | Min | .08 | Inst Max | 225 | Acre-Ft | 1270 |
| Cal Year 2019 | Total | 868.53 | Mean | 2.38 | Max | 221 | Min | 0 | Inst Max | 572 | Acre-Ft | 1720 |

# RUNOFF – DAILY DISCHARGE

Los Angeles County Dept of Public Works USDAY V115 Output 04/20/2021

Summary Report

Site: F45B Rio Hondo Above Stewart and Gray Road
USGS #:
Beginning Date: 10/01/2019
Ending Date: 09/30/2020

Daily Mean Discharge in Cubic feet/second Water Year Oct 2019 to Sep 2020

| Day | OCT | NOV | DEC | JAN | FEB | MAR | APR | MAY | JUN | JUL | AUG | SEP |
|---|---|---|---|---|---|---|---|---|---|---|---|---|
| 1 | .01 | 0 | .03 | 0 | 0 | 0 | .01 | .01 | .36 | .17 | .11 | .07 |
| 2 | .01 | 0 | .02 | 0 | 0 | 0 | .01 | .01 | .36 | .17 | .11 | .07 |
| 3 | .01 | 0 | .02 | 0 | 0 | 0 | .01 | .01 | .36 | .17 | .11 | .07 |
| 4 | .01 | 0 | 89.2 | 0 | 0 | 0 | .01 | .01 | .36 | .17 | .11 | .07 |
| 5 | .01 | 0 | .04 | 0 | 0 | 0 | .01 | .01 | .33 | .17 | .11 | .08 |
| 6 | .01 | 0 | .03 | 0 | 0 | 0 | 59.8 | .01 | .25 | .17 | .14 | .10 |
| 7 | .01 | 0 | .03 | 0 | 0 | 0 | 76.0 | .01 | .25 | .17 | .17 | .10 |
| 8 | .01 | 0 | .22 | 0 | 0 | 0 | 2.91 | .01 | .25 | .17 | .17 | .11 |
| 9 | .01 | 0 | .04 | 0 | 0 | 0 | 66.2 | .01 | .25 | .17 | .11 | .11 |
| 10 | .01 | 0 | .03 | 0 | 0 | .07 | 4.87 | .01 | .35 | .17 | .11 | .11 |
| 11 | .01 | 0 | .02 | 0 | 0 | .25 | .05 | 0 | .36 | .17 | .11 | .11 |
| 12 | .01 | 0 | .02 | 0 | 0 | 116 | .04 | 0 | .36 | .17 | .11 | .08 |
| 13 | .01 | 0 | .01 | 0 | 0 | 21.6 | .03 | 0 | .36 | .17 | .11 | .07 |
| 14 | .01 | 0 | .01 | 0 | 0 | .02 | .03 | 0 | .36 | .17 | .11 | .07 |
| 15 | .01 | 0 | 0 | 0 | 0 | .03 | .02 | 0 | .36 | .17 | .11 | .07 |
| 16 | .01 | 0 | 0 | 0 | 0 | 97.0 | .02 | 0 | .36 | .17 | .11 | .07 |
| 17 | .01 | 0 | 0 | 1.35 | 0 | 3.73 | .02 | 0 | .36 | .17 | .11 | .07 |
| 18 | .01 | 0 | 0 | 0 | 0 | .03 | .02 | .88 | .35 | .17 | .11 | .07 |
| 19 | .01 | 0 | 0 | 0 | 0 | .14 | .02 | 1.35 | .25 | .17 | .11 | .07 |
| 20 | 0 | 117 | 0 | 0 | 0 | .95 | .02 | .73 | .25 | .17 | .11 | .07 |
| 21 | 0 | .47 | 0 | 0 | 0 | .03 | .02 | .69 | .25 | .17 | .11 | .07 |
| 22 | 0 | .02 | .33 | 0 | 0 | 28.3 | .02 | .69 | .25 | .17 | .10 | .07 |
| 23 | 0 | .02 | 123 | 0 | 0 | 5.23 | .02 | .63 | .25 | .17 | .07 | .07 |
| 24 | 0 | .01 | .01 | 0 | 0 | .03 | .02 | .49 | .25 | .17 | .07 | .07 |
| 25 | 0 | .01 | 27.6 | 0 | 0 | .03 | .02 | .36 | .25 | .17 | .07 | .07 |
| 26 | 0 | .01 | 2370 | 0 | 0 | .02 | .02 | .36 | .17 | .17 | .07 | .07 |
| 27 | 0 | 7.25 | .02 | 0 | 0 | .02 | .01 | .36 | .17 | .11 | .07 | .07 |
| 28 | 0 | 125 | .01 | 0 | 0 | .02 | .01 | .36 | .17 | .11 | .07 | .07 |
| 29 | 0 | 2.10 | .01 | 0 | 0 | .02 | .01 | .36 | .17 | .11 | .07 | .07 |
| 30 | 0 | .03 | 0 | 0 | ------ | .02 | .01 | .36 | .17 | .11 | .07 | .06 |
| 31 | 0 | ------ | 0 | 0 | ------ | .01 | ------ | .36 | ------ | .11 | .07 | ------ |
| Total | 0.19 | 251.92 | 2610.70 | 1.35 | 0 | 273.55 | 210.26 | 8.08 | 8.59 | 4.97 | 3.19 | 2.33 |
| Mean | .006 | 8.40 | 84.2 | .044 | 0 | 8.82 | 7.01 | .26 | .29 | .16 | .10 | .078 |
| Max | .01 | 125 | 2370 | 1.35 | 0 | 116 | 76.0 | 1.35 | .36 | .17 | .17 | .11 |
| Min | 0 | 0 | 0 | 0 | 0 | 0 | .01 | 0 | .17 | .11 | .07 | .06 |
| Acre-Ft | .38 | 500 | 5180 | 2.7 | 0 | 543 | 417 | 16 | 17 | 9.9 | 6.3 | 4.6 |

| | | | | | | | | | | | | |
|---|---|---|---|---|---|---|---|---|---|---|---|---|
| Wtr Year 2020 | Total | 3375.13 | Mean | 9.22 | Max | 2370 | Min | 0 | Inst Max | 11000 | Acre-Ft | 6690 |
| Cal Year 2019 | Total | 11860.09 | Mean | 32.5 | Max | 4520 | Min | 0 | Inst Max | 11000 | Acre-Ft | 23520 |

# RUNOFF – DAILY DISCHARGE

Los Angeles County Dept of Public Works USDAY V115 Output 04/20/2021

Summary Report

Site: F192B Rio Hondo Below Lower Azusa Road
USGS #:
Beginning Date: 10/01/2019
Ending Date: 09/30/2020

Daily Mean Discharge in Cubic feet/second Water Year Oct 2019 to Sep 2020

| Day | OCT | NOV | DEC | JAN | FEB | MAR | APR | MAY | JUN | JUL | AUG | SEP |
|---|---|---|---|---|---|---|---|---|---|---|---|---|
| 1 | 0 | 0 | 0 | 0 | 0 | 0 | 0 | 0 | 0 | 0 | 227 | 0 |
| 2 | 0 | 0 | 0 | 0 | 0 | 0 | 0 | 0 | 0 | 0 | 139 | 0 |
| 3 | 0 | 0 | 0 | 14.8 | 0 | 0 | 0 | 0 | 0 | 0 | 55.1 | 0 |
| 4 | 0 | 0 | 17.9 | 26.4 | 0 | 0 | 0 | 0 | 0 | 0 | 20.2 | 0 |
| 5 | 0 | 0 | .12 | 14.7 | 0 | 0 | .91 | 0 | 0 | 0 | 8.44 | 0 |
| 6 | 0 | 0 | .10 | 7.74 | 0 | 0 | 21.5 | 0 | 0 | 0 | 2.91 | 0 |
| 7 | 0 | 0 | .91 | 3.85 | 0 | 0 | 4.66 | 0 | 0 | 0 | .75 | 0 |
| 8 | 0 | 0 | 1.64 | 1.84 | 0 | 0 | 11.7 | 0 | 0 | .29 | .02 | 0 |
| 9 | 0 | 0 | .02 | .74 | 0 | 0 | 8.03 | 0 | 0 | 28.5 | 0 | 1.38 |
| 10 | 0 | 0 | 0 | .04 | 0 | 1.25 | 2.27 | 0 | 0 | 125 | .05 | 62.2 |
| 11 | 0 | 0 | 0 | 0 | 0 | .04 | .04 | 0 | 0 | 150 | 0 | 159 |
| 12 | 0 | 0 | 0 | 0 | 0 | 24.2 | .04 | 0 | 0 | 175 | 0 | 184 |
| 13 | 0 | 0 | 0 | 0 | 0 | 11.9 | .08 | 0 | 0 | 222 | 0 | 192 |
| 14 | 0 | 0 | 0 | 0 | 0 | .31 | 0 | 0 | 0 | 184 | 0 | 214 |
| 15 | 0 | 0 | 0 | 0 | 0 | .40 | 0 | 0 | 0 | 201 | 0 | 207 |
| 16 | 0 | 0 | 0 | .08 | 0 | 9.76 | .01 | 0 | 0 | 196 | 0 | 217 |
| 17 | 0 | 0 | 0 | .97 | 0 | .16 | 0 | 0 | 0 | 194 | 0 | 222 |
| 18 | 0 | 0 | 0 | 0 | 0 | 0 | 0 | 2.13 | 0 | 183 | 0 | 226 |
| 19 | 0 | 0 | 0 | 0 | 0 | 3.73 | 0 | .03 | 0 | 178 | .04 | 234 |
| 20 | 0 | 6.50 | 0 | 0 | 0 | .22 | 0 | 0 | 0 | 192 | .06 | 250 |
| 21 | 0 | 0 | 0 | 0 | 0 | 0 | 0 | 0 | 0 | 203 | .05 | 262 |
| 22 | 0 | 0 | 0 | 0 | 0 | 6.36 | 0 | 0 | 0 | 202 | .03 | 274 |
| 23 | 0 | 0 | 13.3 | 0 | 0 | 2.78 | 0 | 0 | 0 | 200 | 0 | 282 |
| 24 | 0 | 0 | .04 | 0 | 0 | 0 | 0 | 0 | 0 | 197 | 0 | 303 |
| 25 | 0 | 0 | 3.90 | 0 | 0 | 0 | 0 | 0 | 0 | 194 | .01 | 313 |
| 26 | 0 | 0 | 35.9 | 0 | 0 | 0 | 0 | 0 | 0 | 194 | .04 | 318 |
| 27 | 0 | 7.89 | .01 | .25 | 0 | 0 | 0 | 0 | 0 | 194 | 0 | 318 |
| 28 | 0 | 23.7 | 0 | .26 | 0 | 0 | 0 | 0 | 0 | 200 | 0 | 326 |
| 29 | 0 | .93 | 0 | 0 | 0 | 0 | 0 | 0 | 0 | 200 | 0 | 333 |
| 30 | 0 | 0 | 0 | 0 | ------ | 0 | 0 | 0 | 0 | 197 | 0 | 241 |
| 31 | 0 | ------ | 0 | 0 | ------ | 0 | ------ | 0 | ------ | 204 | 0 | ------ |
| Total | 0 | 39.02 | 73.84 | 71.67 | 0 | 61.11 | 49.24 | 2.16 | 0 | 4213.79 | 453.70 | 5138.58 |
| Mean | 0 | 1.30 | 2.38 | 2.31 | 0 | 1.97 | 1.64 | .070 | 0 | 136 | 14.6 | 171 |
| Max | 0 | 23.7 | 35.9 | 26.4 | 0 | 24.2 | 21.5 | 2.13 | 0 | 222 | 227 | 333 |
| Min | 0 | 0 | 0 | 0 | 0 | 0 | 0 | 0 | 0 | 0 | 0 | 0 |
| Acre-Ft | 0 | 77 | 146 | 142 | 0 | 121 | 98 | 4.3 | 0 | 8360 | 900 | 10190 |

| | | | | | | | | | | | | |
|---|---|---|---|---|---|---|---|---|---|---|---|---|
| Wtr Year 2020 | Total | 10103.11 | Mean | 27.6 | Max | 333 | Min | 0 | Inst Max | 454 | Acre-Ft | 20040 |
| Cal Year 2019 | Total | 15289.17 | Mean | 41.9 | Max | 594 | Min | 0 | Inst Max | 775 | Acre-Ft | 30330 |

# RUNOFF – DAILY DISCHARGE

Los Angeles County Dept of Public Works USDAY V115 Output 04/20/2021

Summary Report

Site: F313B Rio Hondo Bypass Channel Above Whittier Narrows
USGS #:
Beginning Date: 10/01/2019
Ending Date: 09/30/2020

Daily Mean Discharge in Cubic feet/second Water Year Oct 2019 to Sep 2020

| Day | OCT | NOV | DEC | JAN | FEB | MAR | APR | MAY | JUN | JUL | AUG | SEP |
|---|---|---|---|---|---|---|---|---|---|---|---|---|
| 1 | 6.22 | 26.6 | 0 | 0 | 11.8 | 12.7 | 0 | 0 | 6.83 | 0 | 0 | 0 |
| 2 | 8.66 | 30.4 | 0 | 0 | 11.1 | 11.7 | 0 | 0 | 5.55 | 0 | 0 | 0 |
| 3 | 13.0 | 29.2 | 0 | 0 | 11.2 | 10.7 | 0 | 0 | 6.51 | 0 | 0 | 0 |
| 4 | 20.7 | 26.9 | .84 | 0 | 11.3 | 11.3 | 0 | 0 | 5.23 | 0 | 0 | 0 |
| 5 | 18.0 | 26.2 | 0 | 0 | 11.3 | 10.9 | 0 | 0 | 8.16 | 0 | 0 | 0 |
| 6 | 21.5 | 23.5 | 0 | 0 | 11.1 | 3.44 | 0 | 0 | 9.40 | 0 | 0 | 0 |
| 7 | 22.0 | 19.8 | 0 | 0 | 11.8 | 0 | 0 | 0 | 9.07 | 0 | 0 | 0 |
| 8 | 20.9 | 14.8 | 0 | 0 | 12.3 | 0 | 0 | 0 | 7.43 | 0 | 0 | 0 |
| 9 | 22.0 | 15.5 | 0 | 0 | 12.2 | 0 | 0 | 0 | 5.31 | 0 | 0 | 0 |
| 10 | 24.0 | 16.7 | 0 | 0 | 11.5 | 0 | 25.7 | 0 | 5.98 | 0 | 0 | 0 |
| 11 | 23.9 | 19.1 | 0 | 0 | 11.2 | 0 | 26.2 | 0 | 5.35 | 0 | 0 | 0 |
| 12 | 25.9 | 13.5 | 0 | 0 | 11.2 | .28 | 9.18 | 0 | 7.40 | 0 | 0 | 0 |
| 13 | 27.4 | 14.9 | 0 | 0 | 11.3 | .21 | 25.8 | 0 | 8.72 | 0 | 0 | 0 |
| 14 | 28.1 | 14.3 | 0 | 0 | 11.9 | 0 | 9.10 | 0 | 9.18 | 0 | 0 | 0 |
| 15 | 25.9 | 16.9 | 0 | 3.74 | 12.3 | 0 | 18.0 | 0 | 7.49 | 0 | 0 | 0 |
| 16 | 25.6 | 17.6 | 0 | 8.61 | 12.3 | 0 | 17.7 | 0 | 7.24 | 0 | 0 | 0 |
| 17 | 23.5 | 16.5 | 0 | 9.04 | 11.2 | 0 | 14.9 | 0 | 3.45 | 0 | 0 | 0 |
| 18 | 23.6 | 15.9 | 0 | 10.2 | 10.7 | 0 | 23.5 | 0 | 0 | 0 | 0 | 0 |
| 19 | 30.8 | 7.49 | 0 | 10.4 | 11.2 | 0 | 23.5 | 1.71 | 0 | 0 | 0 | 0 |
| 20 | 29.3 | .54 | 0 | 10.4 | 11.1 | 0 | 13.9 | 3.74 | 0 | 0 | 0 | 0 |
| 21 | 28.7 | 0 | 0 | 10.6 | 11.8 | 0 | 0 | 3.13 | 0 | 0 | 0 | 0 |
| 22 | 25.1 | 0 | 0 | 10.8 | 11.8 | 0 | 0 | 4.31 | 0 | 0 | 0 | 0 |
| 23 | 23.5 | 0 | .07 | 10.8 | 12.2 | 0 | 0 | 5.82 | 0 | 0 | 0 | 0 |
| 24 | 24.9 | 0 | 0 | 10.6 | 11.8 | 0 | 0 | 6.75 | 0 | 0 | 0 | 0 |
| 25 | 27.4 | 0 | .01 | 11.3 | 11.9 | 0 | 0 | 5.77 | 0 | 0 | 0 | 0 |
| 26 | 25.4 | 0 | 30.3 | 11.6 | 11.4 | 0 | 0 | 4.46 | 0 | 0 | 0 | 0 |
| 27 | 27.8 | 0 | 0 | 12.2 | 11.2 | 0 | 0 | 5.18 | 0 | 0 | 0 | 0 |
| 28 | 30.0 | 1.26 | 0 | 11.9 | 11.7 | 0 | 0 | 5.33 | 0 | 0 | 0 | 0 |
| 29 | 26.2 | 0 | 0 | 11.7 | 12.3 | 0 | 0 | 6.99 | 0 | 0 | 0 | 0 |
| 30 | 26.1 | 0 | 0 | 11.1 | ------ | 0 | 0 | 7.74 | 0 | 0 | 0 | 0 |
| 31 | 24.5 | ------ | 0 | 11.5 | ------ | 0 | ------ | 7.54 | ------ | 0 | 0 | ------ |
| Total | 730.58 | 367.59 | 31.22 | 176.49 | 336.1 | 61.23 | 207.48 | 68.47 | 118.30 | 0 | 0 | 0 |
| Mean | 23.6 | 12.3 | 1.01 | 5.69 | 11.6 | 1.98 | 6.92 | 2.21 | 3.94 | 0 | 0 | 0 |
| Max | 30.8 | 30.4 | 30.3 | 12.2 | 12.3 | 12.7 | 26.2 | 7.74 | 9.40 | 0 | 0 | 0 |
| Min | 6.22 | 0 | 0 | 0 | 10.7 | 0 | 0 | 0 | 0 | 0 | 0 | 0 |
| Acre-Ft | 1450 | 729 | 62 | 350 | 667 | 121 | 412 | 136 | 235 | 0 | 0 | 0 |

| | | | | | | | | | | | | |
|---|---|---|---|---|---|---|---|---|---|---|---|---|
| Wtr Year 2020 | Total | 2097.46 | Mean | 5.73 | Max | 30.8 | Min | 0 | Inst Max | 235 | Acre-Ft | 4160 |
| Cal Year 2019 | Total | 3291.29 | Mean | 9.02 | Max | 111 | Min | 0 | Inst Max | 391 | Acre-Ft | 6530 |

# RUNOFF – DAILY DISCHARGE

Los Angeles County Dept of Public Works USDAY V115 Output 04/20/2021

Summary Report

Site: F338 Rubio Diversion Channel Below Gooseberry Canyon Inlet
USGS #:
Beginning Date: 10/01/2019
Ending Date: 09/30/2020

Daily Mean Discharge in Cubic feet/second Water Year Oct 2019 to Sep 2020

| Day | OCT | NOV | DEC | JAN | FEB | MAR | APR | MAY | JUN | JUL | AUG | SEP |
|---|---|---|---|---|---|---|---|---|---|---|---|---|
| 1 | 0 | 0 | .40 | .51 | .20 | 0 | 0 | 0 | 0 | 0 | 0 | 0 |
| 2 | 0 | 0 | .40 | .46 | .20 | 0 | 0 | 0 | 0 | 0 | 0 | 0 |
| 3 | 0 | 0 | .40 | .47 | .20 | 0 | .01 | 0 | 0 | 0 | 0 | 0 |
| 4 | 0 | 0 | 3.36 | .41 | .21 | 0 | 0 | 0 | 0 | 0 | 0 | 0 |
| 5 | 0 | .08 | .40 | .43 | .08 | 0 | 1.26 | 0 | 0 | 0 | 0 | 0 |
| 6 | 0 | .35 | .49 | .41 | 0 | 0 | 10.5 | 0 | 0 | 0 | 0 | 0 |
| 7 | 0 | .40 | 1.36 | .41 | .02 | 0 | 5.29 | 0 | 0 | 0 | 0 | 0 |
| 8 | 0 | .35 | 2.07 | .33 | 0 | .02 | 7.13 | 0 | 0 | 0 | 0 | 0 |
| 9 | 0 | .40 | .40 | .20 | .66 | .03 | 7.15 | 0 | 0 | 0 | 0 | 0 |
| 10 | 0 | .40 | .40 | .21 | .01 | .68 | 6.79 | 0 | 0 | 0 | 0 | 0 |
| 11 | 0 | .40 | .40 | .20 | 0 | 0 | 6.03 | 0 | 0 | 0 | 0 | 0 |
| 12 | 0 | .40 | .40 | .20 | 0 | 1.33 | 6.24 | 0 | 0 | 0 | 0 | 0 |
| 13 | 0 | .40 | .40 | .21 | 0 | 1.69 | 3.94 | 0 | 0 | 0 | 0 | 0 |
| 14 | .11 | .40 | .40 | .20 | 0 | .35 | 1.20 | 0 | 0 | 0 | 0 | 0 |
| 15 | 0 | .40 | .40 | .20 | 0 | .36 | 1.20 | 0 | 0 | 0 | 0 | 0 |
| 16 | 0 | .40 | .40 | .29 | 0 | 1.83 | .65 | 0 | 0 | 0 | 0 | 0 |
| 17 | 0 | .40 | .47 | .63 | 0 | .05 | 0 | 0 | 0 | 0 | 0 | 0 |
| 18 | .01 | .49 | .40 | .20 | 0 | 0 | 0 | .01 | 0 | 0 | 0 | 0 |
| 19 | 0 | .40 | .40 | .20 | .01 | .24 | 0 | 0 | 0 | 0 | 0 | 0 |
| 20 | 0 | .75 | .40 | .28 | 0 | 0 | 0 | 0 | 0 | 0 | 0 | 0 |
| 21 | 0 | .52 | .40 | .20 | 0 | 0 | 0 | 0 | 0 | 0 | 0 | 0 |
| 22 | 0 | .40 | .73 | .20 | .03 | .97 | 0 | 0 | 0 | 0 | 0 | 0 |
| 23 | 0 | .43 | 3.16 | .20 | 0 | .95 | 0 | 0 | 0 | 0 | 0 | 0 |
| 24 | 0 | .40 | .40 | .20 | 0 | 0 | 0 | 0 | 0 | 0 | 0 | 0 |
| 25 | 0 | .40 | 1.05 | .20 | 0 | 0 | 0 | 0 | 0 | 0 | 0 | 0 |
| 26 | 0 | .40 | 3.93 | .20 | 0 | .03 | 0 | 0 | 0 | 0 | 0 | 0 |
| 27 | 0 | 1.67 | .43 | .20 | 0 | .19 | 0 | 0 | 0 | 0 | 0 | 0 |
| 28 | 0 | 4.21 | .40 | .20 | 0 | 0 | 0 | 0 | 0 | 0 | 0 | 0 |
| 29 | 0 | .59 | .40 | .20 | .03 | .13 | 0 | 0 | 0 | 0 | 0 | 0 |
| 30 | 0 | .40 | .40 | .20 | ------ | .11 | 0 | 0 | 0 | 0 | 0 | 0 |
| 31 | 0 | ------ | .41 | .20 | ------ | 0 | ------ | 0 | ------ | 0 | 0 | ------ |
| Total | 0.12 | 15.84 | 25.46 | 8.65 | 1.65 | 8.96 | 57.39 | 0.01 | 0 | 0 | 0 | 0 |
| Mean | .004 | .53 | .82 | .28 | .057 | .29 | 1.91 | 0 | 0 | 0 | 0 | 0 |
| Max | .11 | 4.21 | 3.93 | .63 | .66 | 1.83 | 10.5 | .01 | 0 | 0 | 0 | 0 |
| Min | 0 | 0 | .40 | .20 | 0 | 0 | 0 | 0 | 0 | 0 | 0 | 0 |
| Acre-Ft | .24 | 31 | 50 | 17 | 3.3 | 18 | 114 | .02 | 0 | 0 | 0 | 0 |

| | | | | | | | | | | | | |
|---|---|---|---|---|---|---|---|---|---|---|---|---|
| Wtr Year 2020 | Total | 118.08 | Mean | .32 | Max | 10.5 | Min | 0 | Inst Max | 188 | Acre-Ft | 234 |
| Cal Year 2019 | Total | 197.53 | Mean | .54 | Max | 15.4 | Min | 0 | Inst Max | 489 | Acre-Ft | 392 |

# RUNOFF – DAILY DISCHARGE

Los Angeles County Dept of Public Works USDAY V115 Output 04/20/2021

Summary Report

Site: F82C Rubio Wash at Glendon Way
USGS #:
Beginning Date: 10/01/2019
Ending Date: 09/30/2020

Daily Mean Discharge in Cubic feet/second Water Year Oct 2019 to Sep 2020

| Day | OCT | NOV | DEC | JAN | FEB | MAR | APR | MAY | JUN | JUL | AUG | SEP |
|---|---|---|---|---|---|---|---|---|---|---|---|---|
| 1 | .25 | .25 | .28 | .29 | .29 | .39 | .29 | .50 | .23 | .17 | .33 | .20 |
| 2 | .25 | .25 | .31 | .28 | .29 | .25 | .29 | .08 | .35 | .25 | .33 | .19 |
| 3 | .25 | .25 | .33 | .30 | .25 | .25 | .26 | .03 | .32 | .24 | .22 | .14 |
| 4 | .25 | .25 | 79.4 | .28 | .25 | .25 | .28 | .53 | .44 | .12 | .28 | .02 |
| 5 | .25 | .25 | .44 | .28 | .25 | .25 | 6.37 | .58 | .45 | 0 | .30 | .09 |
| 6 | .25 | .25 | .50 | .28 | .25 | .25 | 208 | .45 | .44 | 0 | .25 | .31 |
| 7 | .25 | .25 | 1.95 | .32 | .25 | .25 | 24.4 | .14 | .27 | .35 | .25 | .34 |
| 8 | .25 | .25 | 10.8 | .30 | .25 | .25 | 3.72 | .15 | 1.22 | .51 | .18 | .53 |
| 9 | .25 | .25 | .34 | .34 | 17.3 | .25 | 22.6 | .16 | .74 | .23 | 0 | .36 |
| 10 | .25 | .25 | .28 | .31 | .38 | 11.3 | 4.77 | .08 | .62 | .22 | .25 | .38 |
| 11 | .25 | .25 | .30 | .29 | .30 | .27 | .02 | .04 | .71 | .30 | .27 | .40 |
| 12 | .25 | .25 | .29 | .29 | .29 | 153 | .36 | .19 | .43 | .31 | .14 | .42 |
| 13 | .25 | .25 | .28 | .35 | .29 | 31.7 | .86 | .19 | .35 | .39 | .15 | .43 |
| 14 | .25 | .25 | .27 | .29 | .29 | 1.81 | .05 | .20 | .25 | .57 | .25 | .45 |
| 15 | .25 | .25 | .27 | .32 | .30 | 3.77 | .17 | .21 | .20 | .52 | .25 | .47 |
| 16 | .25 | .25 | .30 | .56 | .31 | 60.5 | .01 | .13 | .31 | .43 | .16 | .44 |
| 17 | .25 | .25 | .33 | 6.59 | .31 | .59 | .09 | .13 | .26 | .36 | .09 | .42 |
| 18 | .31 | .25 | .29 | .33 | .32 | .25 | 0 | 12.9 | .25 | .27 | .21 | .38 |
| 19 | .25 | .25 | .32 | .32 | .27 | 5.27 | .05 | .23 | .17 | .16 | .25 | .41 |
| 20 | .25 | 6.97 | .27 | .32 | .34 | .33 | .09 | .17 | .14 | .32 | .25 | .37 |
| 21 | .25 | .42 | .27 | .33 | .25 | .25 | .03 | .23 | .18 | .62 | .25 | .33 |
| 22 | .25 | .25 | 1.17 | .29 | .26 | 42.1 | .20 | .15 | .07 | .56 | .15 | .29 |
| 23 | .25 | .25 | 82.1 | .31 | .25 | 7.84 | .07 | .16 | 1.37 | .43 | .18 | .26 |
| 24 | .25 | .25 | .34 | .28 | .25 | .26 | .12 | .19 | .44 | .35 | .25 | .25 |
| 25 | .25 | .25 | 34.1 | .29 | .25 | .25 | .22 | .18 | .25 | .36 | .25 | .25 |
| 26 | .25 | .25 | 261 | .28 | .25 | .28 | .10 | .28 | .27 | .23 | .25 | .25 |
| 27 | .25 | 30.7 | .39 | .29 | .25 | .27 | .12 | .47 | .25 | .22 | .25 | .25 |
| 28 | .25 | 117 | .33 | .28 | .25 | .25 | .14 | .51 | .19 | .23 | .19 | .25 |
| 29 | .25 | 2.47 | .27 | .30 | .25 | .26 | .17 | .38 | .24 | .49 | .16 | .25 |
| 30 | .25 | .29 | .33 | .28 | ------ | .28 | .52 | .31 | .13 | .39 | .14 | .25 |
| 31 | .25 | ------ | .33 | .27 | ------ | .27 | ------ | .19 | ------ | .20 | .19 | ------ |
| Total | 7.81 | 163.85 | 478.18 | 15.84 | 25.04 | 323.49 | 274.37 | 20.14 | 11.54 | 9.80 | 6.67 | 9.38 |
| Mean | .25 | 5.46 | 15.4 | .51 | .86 | 10.4 | 9.15 | .65 | .38 | .32 | .22 | .31 |
| Max | .31 | 117 | 261 | 6.59 | 17.3 | 153 | 208 | 12.9 | 1.37 | .62 | .33 | .53 |
| Min | .25 | .25 | .27 | .27 | .25 | .25 | 0 | .03 | .07 | 0 | 0 | .02 |
| Acre-Ft | 15 | 325 | 948 | 31 | 50 | 642 | 544 | 40 | 23 | 19 | 13 | 19 |

| | | | | | | | | | | | | |
|---|---|---|---|---|---|---|---|---|---|---|---|---|
| Wtr Year 2020 | Total | 1346.11 | Mean | 3.68 | Max | 261 | Min | 0 | Inst Max | 3180 | Acre-Ft | 2670 |
| Cal Year 2019 | Total | 2384.87 | Mean | 6.53 | Max | 347 | Min | 0 | Inst Max | 3740 | Acre-Ft | 4730 |

# RUNOFF – DAILY DISCHARGE

Los Angeles County Dept of Public Works USDAY V115 Output 08/05/2021

Summary Report

Site: F303 San Dimas Creek Below San Dimas Dam
USGS #:
Beginning Date: 10/01/2019
Ending Date: 09/30/2020

Daily Mean Discharge in Cubic feet/second Water Year Oct 2019 to Sep 2020

| Day | OCT | NOV | DEC | JAN | FEB | MAR | APR | MAY | JUN | JUL | AUG | SEP |
|---|---|---|---|---|---|---|---|---|---|---|---|---|
| 1 | 0 | 0 | 0 | 0 | .12 | .28 | .16 | .33 | 16.5 | 1.15 | .39 | .09 |
| 2 | 0 | 0 | 0 | 0 | .12 | .27 | .16 | .28 | 14.8 | .89 | .38 | .09 |
| 3 | 0 | 0 | 0 | 0 | .07 | .28 | .16 | .28 | 16.0 | .74 | .38 | .05 |
| 4 | 0 | 0 | 0 | 0 | .11 | .28 | .16 | .28 | 16.0 | .89 | .39 | .04 |
| 5 | 0 | 0 | 0 | 0 | .12 | .28 | .13 | .25 | 15.4 | 1.20 | .38 | .04 |
| 6 | 0 | 0 | 0 | 0 | .20 | .28 | .13 | .24 | 15.2 | 1.19 | .37 | .04 |
| 7 | 0 | 0 | 0 | .03 | .20 | .28 | .04 | 11.7 | 14.3 | 1.17 | .37 | .04 |
| 8 | 0 | 0 | 0 | .04 | .20 | .28 | .10 | .28 | 14.0 | 1.16 | .37 | .04 |
| 9 | 0 | 0 | 0 | .04 | .20 | .28 | .08 | .27 | 13.9 | 1.14 | .37 | .04 |
| 10 | 0 | 0 | 0 | .04 | .20 | .22 | .14 | .24 | 13.8 | 1.13 | .36 | .04 |
| 11 | 0 | 0 | 0 | .04 | .20 | .15 | .20 | 15.5 | 11.9 | 1.03 | .33 | .04 |
| 12 | 0 | 0 | 0 | .04 | .20 | .18 | .20 | 24.5 | 11.0 | .99 | .29 | .04 |
| 13 | 0 | 0 | 0 | .04 | .20 | .05 | .21 | 19.7 | 10.3 | .96 | .27 | .04 |
| 14 | 0 | 0 | 0 | .04 | .20 | 0 | .21 | 19.7 | 9.70 | .90 | .25 | .04 |
| 15 | 0 | 0 | 0 | .04 | .20 | 0 | .21 | 19.7 | 9.53 | .86 | .24 | .04 |
| 16 | 0 | 0 | 0 | .04 | .20 | 0 | .21 | 19.7 | 10.3 | .85 | .22 | .04 |
| 17 | 0 | 0 | 0 | .01 | .20 | 0 | .24 | 19.7 | 10.2 | .78 | .20 | .04 |
| 18 | 0 | 0 | 0 | .05 | .20 | 0 | .24 | 19.7 | 14.5 | .73 | .18 | .05 |
| 19 | 0 | 0 | 0 | .08 | .20 | .01 | .24 | 19.7 | 13.1 | .71 | .18 | .04 |
| 20 | 0 | 0 | 0 | .08 | .20 | 0 | .24 | 19.7 | 12.3 | .77 | .16 | .04 |
| 21 | 0 | 0 | 0 | 0 | .20 | .07 | .25 | 19.7 | 11.0 | .97 | .14 | .04 |
| 22 | 0 | 0 | 0 | .02 | .19 | .16 | .28 | 19.7 | 9.41 | .90 | .13 | .04 |
| 23 | 0 | 0 | 0 | 0 | .14 | .20 | .28 | 19.7 | 8.75 | .83 | .13 | .04 |
| 24 | 0 | 0 | 0 | 0 | .23 | .20 | .28 | 19.7 | 9.04 | .83 | .15 | .04 |
| 25 | 0 | 0 | 0 | 0 | .26 | 27.9 | .28 | 19.7 | 6.79 | .76 | .13 | .04 |
| 26 | 0 | 0 | 0 | 0 | .28 | 33.5 | .28 | 19.7 | 5.53 | .70 | .09 | .04 |
| 27 | 0 | 0 | 0 | 0 | .28 | .16 | .28 | 19.5 | 4.32 | .68 | .07 | .04 |
| 28 | 0 | 0 | 0 | .02 | .28 | .16 | .67 | 17.8 | 3.70 | .67 | .04 | .04 |
| 29 | 0 | 0 | 0 | .08 | .28 | .16 | 1.54 | 17.1 | 3.85 | .65 | .04 | .04 |
| 30 | 0 | 0 | 0 | .12 | ------ | .16 | 1.05 | 17.1 | 3.82 | .52 | .04 | .04 |
| 31 | 0 | ------ | 0 | .12 | ------ | .16 | ------ | 17.1 | ------ | .45 | .07 | ------ |
| Total | 0 | 0 | 0 | 0.97 | 5.68 | 65.95 | 8.65 | 418.55 | 328.94 | 27.20 | 7.11 | 1.32 |
| Mean | 0 | 0 | 0 | .031 | .20 | 2.13 | .29 | 13.5 | 11.0 | .88 | .23 | .044 |
| Max | 0 | 0 | 0 | .12 | .28 | 33.5 | 1.54 | 24.5 | 16.5 | 1.20 | .39 | .09 |
| Min | 0 | 0 | 0 | 0 | .07 | 0 | .04 | .24 | 3.70 | .45 | .04 | .04 |
| Acre-Ft | 0 | 0 | 0 | 1.9 | 11 | 131 | 17 | 830 | 652 | 54 | 14 | 2.6 |

| | | | | | | | | | | | | |
|---|---|---|---|---|---|---|---|---|---|---|---|---|
| Wtr Year 2020 | Total | 864.37 | Mean | 2.36 | Max | 33.5 | Min | 0 | Inst Max | 492 | Acre-Ft | 1710 |
| Cal Year 2019 | Total | 2284.33 | Mean | 6.26 | Max | 142 | Min | 0 | Inst Max | 606 | Acre-Ft | 4530 |

# RUNOFF – DAILY DISCHARGE

Los Angeles County Dept of Public Works USDAY V115 Output 04/20/2021

Summary Report

Site: F218 San Dimas Wash Below Puddingstone Diversion Dam
USGS #:
Beginning Date: 10/01/2019
Ending Date: 09/30/2020

Daily Mean Discharge in Cubic feet/second Water Year Oct 2019 to Sep 2020

| Day | OCT | NOV | DEC | JAN | FEB | MAR | APR | MAY | JUN | JUL | AUG | SEP |
|---|---|---|---|---|---|---|---|---|---|---|---|---|
| 1 | 0 | 0 | 0 | 0 | 0 | 0 | .44 | 0 | 10.9 | 3.79 | 0 | 0 |
| 2 | 0 | 0 | 0 | 0 | 0 | 0 | .11 | 0 | 10.8 | 1.98 | 0 | 0 |
| 3 | 0 | 0 | 0 | 0 | 0 | 0 | 0 | 0 | 10.5 | .28 | 0 | 0 |
| 4 | 0 | 0 | 0 | 0 | 0 | 0 | 0 | 0 | 10.5 | .11 | 0 | 0 |
| 5 | 0 | 0 | 0 | 0 | 0 | 0 | 0 | 0 | 10.6 | 0 | 0 | 0 |
| 6 | 0 | 0 | 0 | 0 | 0 | 0 | .29 | 0 | 10.5 | 0 | 0 | 0 |
| 7 | 0 | 0 | 0 | 0 | 0 | 0 | .02 | 0 | 10.4 | 0 | 0 | 0 |
| 8 | 0 | 0 | 0 | 0 | 0 | 0 | .10 | 0 | 10.2 | 0 | 0 | 0 |
| 9 | 0 | 0 | 0 | 0 | 0 | 0 | 0 | 0 | 10.0 | 0 | 0 | 0 |
| 10 | 0 | 0 | 0 | 0 | 0 | 0 | .11 | 0 | 9.87 | 0 | 0 | 0 |
| 11 | 0 | 0 | 0 | 0 | 0 | 0 | 0 | 0 | 9.66 | 0 | 0 | 0 |
| 12 | 0 | 0 | 0 | 0 | 0 | 0 | 0 | 6.98 | 9.37 | 0 | 0 | 0 |
| 13 | 0 | 0 | 0 | 0 | 0 | 0 | 0 | 11.8 | 9.16 | 0 | 0 | 0 |
| 14 | 0 | 0 | 0 | 0 | 0 | 0 | 0 | 11.4 | 8.90 | 0 | 0 | 0 |
| 15 | 0 | 0 | 0 | 0 | 0 | 0 | 0 | 11.1 | 8.46 | 0 | 0 | 0 |
| 16 | 0 | 0 | 0 | 0 | 0 | 0 | 0 | 11.1 | 8.21 | 0 | 0 | 0 |
| 17 | 0 | 0 | 0 | 0 | 0 | 0 | 0 | 11.1 | 8.10 | 0 | 0 | 0 |
| 18 | 0 | 0 | 0 | 0 | 0 | 0 | 0 | 11.2 | 8.65 | 0 | 0 | 0 |
| 19 | 0 | 0 | 0 | 0 | 0 | 0 | 0 | 11.1 | 9.99 | 0 | 0 | 0 |
| 20 | 0 | 0 | 0 | 0 | 0 | 0 | 0 | 11.1 | 9.81 | 0 | 0 | 0 |
| 21 | 0 | 0 | 0 | 0 | 0 | 0 | 6.47 | 11.1 | 9.45 | 0 | 0 | 0 |
| 22 | 0 | 0 | 0 | 0 | 0 | 0 | 8.24 | 11.0 | 8.55 | 0 | 0 | 0 |
| 23 | 0 | 0 | 0 | 0 | 0 | 0 | 3.99 | 11.1 | 7.60 | 0 | 0 | 0 |
| 24 | 0 | 0 | 0 | 0 | 0 | 0 | 1.01 | 11.0 | 7.10 | 0 | 0 | 0 |
| 25 | 0 | 0 | 0 | 0 | 0 | 0 | 0 | 10.9 | 6.90 | 0 | 0 | 0 |
| 26 | 0 | 0 | 0 | 0 | 0 | .44 | 0 | 10.9 | 6.50 | 0 | 0 | 0 |
| 27 | 0 | .30 | 0 | 0 | 0 | .44 | 0 | 10.9 | 6.02 | 0 | 0 | 0 |
| 28 | 0 | 1.66 | 0 | 0 | 0 | .44 | 0 | 10.9 | 5.88 | 0 | 0 | 0 |
| 29 | 0 | 1.54 | 0 | 0 | 0 | .44 | 0 | 10.9 | 5.38 | 0 | 0 | 0 |
| 30 | 0 | .92 | 0 | 0 | ------ | .44 | 0 | 11.0 | 4.65 | 0 | 0 | 0 |
| 31 | 0 | ------ | 0 | 0 | ------ | .44 | ------ | 11.0 | ------ | 0 | 0 | ------ |
| Total | 0 | 4.42 | 0 | 0 | 0 | 2.64 | 20.78 | 217.58 | 262.61 | 6.16 | 0 | 0 |
| Mean | 0 | .15 | 0 | 0 | 0 | .085 | .69 | 7.02 | 8.75 | .20 | 0 | 0 |
| Max | 0 | 1.66 | 0 | 0 | 0 | .44 | 8.24 | 11.8 | 10.9 | 3.79 | 0 | 0 |
| Min | 0 | 0 | 0 | 0 | 0 | 0 | 0 | 0 | 4.65 | 0 | 0 | 0 |
| Acre-Ft | 0 | 8.8 | 0 | 0 | 0 | 5.2 | 41 | 432 | 521 | 12 | 0 | 0 |

| | | | | | | | | | | | | |
|---|---|---|---|---|---|---|---|---|---|---|---|---|
| Wtr Year 2020 | Total | 514.19 | Mean | 1.40 | Max | 11.8 | Min | 0 | Inst Max | 12.0 | Acre-Ft | 1020 |
| Cal Year 2019 | Total | 1422.40 | Mean | 3.90 | Max | 26.8 | Min | 0 | Inst Max | 28.4 | Acre-Ft | 2820 |

# RUNOFF – DAILY DISCHARGE

Los Angeles County Dept of Public Works USDAY V115 Output 04/20/2021

Summary Report

Site: F250 San Gabriel River - Azusa Conduit 25 Ft. Weir Below Dam
USGS #:
Beginning Date: 10/01/2019
Ending Date: 09/30/2020

Daily Mean Discharge in Cubic feet/second Water Year Oct 2019 to Sep 2020

| Day | OCT | NOV | DEC | JAN | FEB | MAR | APR | MAY | JUN | JUL | AUG | SEP |
|---|---|---|---|---|---|---|---|---|---|---|---|---|
| 1 | 0 | .22 | 0 | 29.3 | 63.5 | 29.5 | 50.0 | 64.7 | 0 | .25 | .45 | 70.1 |
| 2 | 0 | .22 | 0 | 29.4 | 31.7 | 29.5 | 50.1 | 64.7 | 0 | 32.0 | .53 | 70.2 |
| 3 | 0 | .22 | 0 | 29.5 | 30.1 | 29.7 | 50.1 | 64.7 | 0 | 64.1 | .55 | 70.2 |
| 4 | 0 | 12.9 | 0 | 29.5 | 30.2 | 29.7 | 50.2 | 30.5 | 0 | 64.1 | 43.7 | 70.1 |
| 5 | 0 | 27.3 | 0 | 29.5 | 30.2 | 29.5 | 50.2 | .17 | 0 | 64.0 | 69.3 | 69.6 |
| 6 | .10 | 16.2 | 0 | 29.6 | 48.5 | 29.5 | 50.4 | 0 | 0 | 63.8 | 69.3 | 69.9 |
| 7 | .22 | 0 | 0 | 29.6 | 63.6 | 29.5 | 51.0 | 0 | 0 | 63.8 | 68.8 | 70.1 |
| 8 | .22 | 0 | 0 | 29.6 | 63.4 | 29.6 | 59.2 | 0 | 0 | 64.0 | 68.8 | 69.8 |
| 9 | .22 | 0 | 0 | 29.6 | 63.2 | 29.6 | 64.6 | 0 | 0 | 63.7 | 69.3 | 70.0 |
| 10 | .13 | 0 | 0 | 29.6 | 63.0 | 29.5 | 64.7 | 0 | 0 | 63.9 | 69.5 | 70.1 |
| 11 | .22 | 0 | 0 | 29.6 | 63.1 | 29.5 | 64.7 | 0 | 0 | 63.8 | 69.2 | 69.7 |
| 12 | .22 | 0 | 0 | 29.6 | 51.0 | 29.5 | 64.3 | 0 | 41.3 | 63.7 | 67.8 | 69.4 |
| 13 | .22 | 0 | 3.73 | 29.6 | 29.5 | 29.5 | 63.9 | 0 | 64.8 | 63.7 | 43.6 | 69.4 |
| 14 | .22 | 0 | 0 | 29.5 | 29.4 | 29.5 | 64.0 | 0 | 64.7 | 63.5 | .99 | 69.5 |
| 15 | .22 | 0 | 0 | 29.5 | 29.4 | 29.6 | 64.5 | 0 | 64.5 | 63.4 | 1.12 | 69.6 |
| 16 | .22 | 0 | 0 | 29.5 | 29.4 | 29.7 | 64.7 | 0 | 63.3 | 64.4 | 1.12 | 69.5 |
| 17 | .22 | 0 | 0 | 29.4 | 29.4 | 29.7 | 64.7 | 0 | 64.2 | 64.7 | 1.12 | 69.6 |
| 18 | .14 | 0 | 0 | 29.3 | 29.4 | 29.8 | 64.7 | 0 | 64.0 | 64.6 | 48.9 | 36.9 |
| 19 | .22 | 0 | 0 | 29.3 | 29.4 | 29.8 | 64.7 | 0 | 63.8 | 64.4 | 69.3 | 2.00 |
| 20 | .18 | 0 | 0 | 29.3 | 29.5 | 29.7 | 64.4 | 0 | 63.7 | 64.3 | 69.0 | 48.3 |
| 21 | .22 | 0 | 0 | 29.3 | 29.4 | 29.9 | 64.8 | 0 | 64.2 | 64.1 | 65.6 | 70.5 |
| 22 | .22 | 0 | 0 | 29.3 | 29.5 | 29.7 | 64.7 | 0 | 63.7 | 63.9 | 68.5 | 70.3 |
| 23 | .22 | 0 | 27.5 | 29.4 | 29.5 | 29.5 | 64.7 | 0 | 64.7 | 63.7 | 68.5 | 70.0 |
| 24 | .22 | 0 | 24.5 | 29.3 | 29.5 | 43.2 | 64.7 | 0 | 38.1 | 63.9 | 68.6 | 70.3 |
| 25 | .22 | 0 | 0 | 29.3 | 29.5 | 49.2 | 64.7 | 0 | 0 | 64.0 | 68.3 | 70.4 |
| 26 | .22 | 0 | 0 | 29.3 | 29.5 | 49.7 | 64.8 | 0 | 0 | 63.9 | 67.8 | 70.2 |
| 27 | .22 | 0 | 0 | 29.2 | 29.6 | 50.0 | 64.8 | 0 | 0 | 63.7 | 60.5 | 70.2 |
| 28 | .22 | 0 | 0 | 29.3 | 29.8 | 50.1 | 64.8 | 0 | 0 | 63.5 | 67.0 | 70.0 |
| 29 | .22 | 0 | 0 | 29.3 | 29.5 | 50.2 | 64.7 | 0 | 0 | 63.3 | 66.9 | 69.5 |
| 30 | .22 | 0 | 0 | 29.5 | ------ | 50.0 | 64.7 | 0 | 0 | 34.0 | 67.0 | 69.1 |
| 31 | .22 | ------ | 13.2 | 44.7 | ------ | 50.0 | ------ | 0 | ------ | .45 | 68.8 | ------ |
| Total | 5.39 | 57.06 | 68.93 | 927.7 | 1102.7 | 1073.4 | 1832.5 | 224.77 | 785.0 | 1792.60 | 1569.88 | 1974.50 |
| Mean | .17 | 1.90 | 2.22 | 29.9 | 38.0 | 34.6 | 61.1 | 7.25 | 26.2 | 57.8 | 50.6 | 65.8 |
| Max | .22 | 27.3 | 27.5 | 44.7 | 63.6 | 50.2 | 64.8 | 64.7 | 64.8 | 64.7 | 69.5 | 70.5 |
| Min | 0 | 0 | 0 | 29.2 | 29.4 | 29.5 | 50.0 | 0 | 0 | .25 | .45 | 2.00 |
| Acre-Ft | 11 | 113 | 137 | 1840 | 2190 | 2130 | 3630 | 446 | 1560 | 3560 | 3110 | 3920 |

| | | | | | | | | | | | | |
|---|---|---|---|---|---|---|---|---|---|---|---|---|
| Wtr Year 2020 | Total | 11414.43 | Mean | 31.2 | Max | 70.5 | Min | 0 | Inst Max | 73.2 | Acre-Ft | 22640 |
| Cal Year 2019 | Total | 7921.90 | Mean | 21.7 | Max | 64.7 | Min | 0 | Inst Max | 64.7 | Acre-Ft | 15710 |

# RUNOFF – DAILY DISCHARGE

Los Angeles County Dept of Public Works USDAY V115 Output 04/20/2021

Summary Report

Site: F220B San Gabriel - Azusa Conduit 10 Ft. Weir Below S.G. Dam
USGS #:
Beginning Date: 10/01/2019
Ending Date: 09/30/2020

Daily Mean Discharge in Cubic feet/second Water Year Oct 2019 to Sep 2020

| Day | OCT | NOV | DEC | JAN | FEB | MAR | APR | MAY | JUN | JUL | AUG | SEP |
|---|---|---|---|---|---|---|---|---|---|---|---|---|
| 1 | 0 | 0 | 0 | 0 | 0 | 0 | 0 | 0 | 0 | 0 | 0 | 0 |
| 2 | 0 | 0 | 0 | 0 | 0 | 0 | 0 | 0 | 0 | 0 | 0 | 0 |
| 3 | 0 | 0 | 0 | 0 | 0 | 0 | 0 | 0 | 0 | 0 | 0 | 0 |
| 4 | 0 | 0 | 0 | 0 | 0 | 0 | 0 | 0 | 0 | 0 | 0 | 0 |
| 5 | 0 | 0 | 0 | 0 | 0 | 0 | 0 | 0 | 0 | 0 | 0 | 0 |
| 6 | 0 | 0 | 0 | 0 | 0 | 0 | 0 | 0 | 0 | 0 | 0 | 0 |
| 7 | 0 | 0 | 0 | 0 | 0 | 0 | 0 | 0 | 0 | 0 | 0 | 0 |
| 8 | 0 | 0 | 0 | 0 | 0 | 0 | 0 | 0 | 0 | 0 | 0 | 0 |
| 9 | 0 | 0 | 0 | 0 | 0 | 0 | 0 | 0 | 0 | 0 | 0 | 0 |
| 10 | 0 | 0 | 0 | 0 | 0 | 0 | 0 | 0 | 0 | 0 | 0 | 0 |
| 11 | 0 | 0 | 0 | 0 | 0 | 0 | 0 | 0 | 0 | 0 | 0 | 0 |
| 12 | 0 | 0 | 0 | 0 | 0 | 0 | 0 | 0 | 0 | 0 | 0 | 0 |
| 13 | 0 | 0 | 0 | 0 | 0 | 0 | 0 | 0 | 0 | 0 | 0 | 0 |
| 14 | 0 | 0 | 0 | 0 | 0 | 0 | 0 | 0 | 0 | 0 | 0 | 0 |
| 15 | 0 | 0 | 0 | 0 | 0 | 0 | 0 | 0 | 0 | 0 | 0 | 0 |
| 16 | 0 | 0 | 0 | 0 | 0 | 0 | 0 | 0 | 0 | 0 | 0 | 0 |
| 17 | 0 | 0 | 0 | 0 | 0 | 0 | 0 | 0 | 0 | 0 | 0 | 0 |
| 18 | 0 | 0 | 0 | 0 | 0 | 0 | 0 | 0 | 0 | 0 | 0 | 0 |
| 19 | 0 | 0 | 0 | 0 | 0 | 0 | 0 | 0 | 0 | 0 | 0 | 0 |
| 20 | 0 | 0 | 0 | 0 | 0 | 0 | 0 | 0 | 0 | 0 | 0 | 0 |
| 21 | 0 | 0 | 0 | 0 | 0 | 0 | 0 | 0 | 0 | 0 | 0 | 0 |
| 22 | 0 | 0 | 0 | 0 | 0 | 0 | 0 | 0 | 0 | 0 | 0 | 0 |
| 23 | 0 | 0 | 0 | 0 | 0 | 0 | 0 | 0 | 0 | 0 | 0 | 0 |
| 24 | 0 | 0 | 0 | 0 | 0 | 0 | 0 | 0 | 0 | 0 | 0 | 0 |
| 25 | 0 | 0 | 0 | 0 | 0 | 0 | 0 | 0 | 0 | 0 | 0 | 0 |
| 26 | 0 | 0 | 0 | 0 | 0 | 0 | 0 | 0 | 0 | 0 | 0 | 0 |
| 27 | 0 | 0 | 0 | 0 | 0 | 0 | 0 | 0 | 0 | 0 | 0 | 0 |
| 28 | 0 | 0 | 0 | 0 | 0 | 0 | 0 | 0 | 0 | 0 | 0 | 0 |
| 29 | 0 | 0 | 0 | 0 | 0 | 0 | 0 | 0 | 0 | 0 | 0 | 0 |
| 30 | 0 | 0 | 0 | 0 | ------ | 0 | 0 | 0 | 0 | 0 | 0 | 0 |
| 31 | 0 | ------ | 0 | 0 | ------ | 0 | ------ | 0 | ------ | 0 | 0 | ------ |
| Total | 0 | 0 | 0 | 0 | 0 | 0 | 0 | 0 | 0 | 0 | 0 | 0 |
| Mean | 0 | 0 | 0 | 0 | 0 | 0 | 0 | 0 | 0 | 0 | 0 | 0 |
| Max | 0 | 0 | 0 | 0 | 0 | 0 | 0 | 0 | 0 | 0 | 0 | 0 |
| Min | 0 | 0 | 0 | 0 | 0 | 0 | 0 | 0 | 0 | 0 | 0 | 0 |
| Acre-Ft | 0 | 0 | 0 | 0 | 0 | 0 | 0 | 0 | 0 | 0 | 0 | 0 |

| | | | | | | | | | | | | |
|---|---|---|---|---|---|---|---|---|---|---|---|---|
| Wtr Year 2020 | Total | 0 | Mean | 0 | Max | 0 | Min | 0 | Inst Max | 0 | Acre-Ft | 0 |
| Cal Year 2019 | Total | 2648.44 | Mean | 7.26 | Max | 20.1 | Min | 0 | Inst Max | 42.4 | Acre-Ft | 5250 |

# RUNOFF – DAILY DISCHARGE

Los Angeles County Dept of Public Works USDAY V115 Output 04/20/2021

Summary Report

Site: F262C San Gabriel River Above Firestone Ave.
USGS #:
Beginning Date: 10/01/2019
Ending Date: 09/30/2020

Daily Mean Discharge in Cubic feet/second Water Year Oct 2019 to Sep 2020

| Day | OCT | NOV | DEC | JAN | FEB | MAR | APR | MAY | JUN | JUL | AUG | SEP |
|---|---|---|---|---|---|---|---|---|---|---|---|---|
| 1 | 0 | 0 | 0 | 0 | 0 | 0 | 0 | 0 | 0 | 0 | 0 | 0 |
| 2 | 0 | 0 | 0 | 0 | 0 | 0 | 0 | 0 | 0 | 0 | 0 | 0 |
| 3 | 0 | 0 | 0 | 0 | 0 | 0 | 0 | 0 | 0 | 0 | 0 | 0 |
| 4 | 0 | 0 | 0 | 0 | 0 | 0 | 0 | 0 | 0 | 0 | 0 | 0 |
| 5 | 0 | 0 | 0 | 0 | 0 | 0 | 0 | 0 | 0 | 0 | 0 | 0 |
| 6 | 0 | 0 | 0 | 0 | 0 | 0 | 0 | 0 | 0 | 0 | 0 | 0 |
| 7 | 0 | 0 | 0 | 0 | 0 | 0 | 0 | 0 | 0 | 0 | 0 | 0 |
| 8 | 0 | 0 | 0 | 0 | 0 | 0 | 0 | 0 | 0 | 0 | 0 | 0 |
| 9 | 0 | 0 | 0 | 0 | 0 | 0 | 0 | 0 | 0 | 0 | 0 | 0 |
| 10 | 0 | 0 | 0 | 0 | 0 | 0 | 0 | 0 | 0 | 0 | 0 | 0 |
| 11 | 0 | 0 | 0 | 0 | 0 | 0 | 0 | 0 | 0 | 0 | 0 | 0 |
| 12 | 0 | 0 | 0 | 0 | 0 | .37 | 0 | 0 | 0 | 0 | 0 | 0 |
| 13 | 0 | 0 | 0 | 0 | 0 | 0 | 0 | 0 | 0 | 0 | 0 | 0 |
| 14 | 0 | 0 | 0 | 0 | 0 | 0 | 0 | 0 | 0 | 0 | 0 | 0 |
| 15 | 0 | 0 | 0 | 0 | 0 | 0 | 0 | 0 | 0 | 0 | 0 | 0 |
| 16 | 0 | 0 | 0 | 0 | 0 | 0 | 0 | 0 | 0 | 0 | 0 | 0 |
| 17 | 0 | 0 | 0 | 0 | 0 | 0 | 0 | 0 | 0 | 0 | 0 | 0 |
| 18 | 0 | 0 | 0 | 0 | 0 | 0 | 0 | 0 | 0 | 0 | 0 | 0 |
| 19 | 0 | 0 | 0 | 0 | 0 | 0 | 0 | 0 | 0 | 0 | 0 | 0 |
| 20 | 0 | 0 | 0 | 0 | 0 | 0 | 0 | 0 | 0 | 0 | 0 | 0 |
| 21 | 0 | 0 | 0 | 0 | 0 | 0 | 0 | 0 | 0 | 0 | 0 | 0 |
| 22 | 0 | 0 | 0 | 0 | 0 | 0 | 0 | 0 | 0 | 0 | 0 | 0 |
| 23 | 0 | 0 | 10.3 | 0 | 0 | 0 | 0 | 0 | 0 | 0 | 0 | 0 |
| 24 | 0 | 0 | 0 | 0 | 0 | 0 | 0 | 0 | 0 | 0 | 0 | 0 |
| 25 | 0 | 0 | 0 | 0 | 0 | 0 | 0 | 0 | 0 | 0 | 0 | 0 |
| 26 | 0 | 0 | 214* | 0 | 0 | 0 | 0 | 0 | 0 | 0 | 0 | 0 |
| 27 | 0 | 0 | 0 | 0 | 0 | 0 | 0 | 0 | 0 | 0 | 0 | 0 |
| 28 | 0 | 10.6 | 0 | 0 | 0 | 0 | 0 | 0 | 0 | 0 | 0 | 0 |
| 29 | 0 | 0 | 0 | 0 | 0 | 0 | 0 | 0 | 0 | 0 | 0 | 0 |
| 30 | 0 | 0 | 0 | 0 | ------ | 0 | 0 | 0 | 0 | 0 | 0 | 0 |
| 31 | 0 | ------ | 0 | 0 | ------ | 0 | ------ | 0 | ------ | 0 | 0 | ------ |
| Total | 0 | 10.6 | 224.3 | 0 | 0 | 0.37 | 0 | 0 | 0 | 0 | 0 | 0 |
| Mean | 0 | .35 | 7.24 | 0 | 0 | .012 | 0 | 0 | 0 | 0 | 0 | 0 |
| Max | 0 | 10.6 | 214 | 0 | 0 | .37 | 0 | 0 | 0 | 0 | 0 | 0 |
| Min | 0 | 0 | 0 | 0 | 0 | 0 | 0 | 0 | 0 | 0 | 0 | 0 |
| Acre-Ft | 0 | 21 | 445 | 0 | 0 | .73 | 0 | 0 | 0 | 0 | 0 | 0 |

| | | | | | | | | | | | | |
|---|---|---|---|---|---|---|---|---|---|---|---|---|
| Wtr Year 2020 | Total | 235.27 | Mean | .64 | Max | 214 | Min | 0 | Inst Max | 1680 | Acre-Ft | 467 |
| Cal Year 2019 | Total | 1804.95 | Mean | 4.95 | Max | 452 | Min | 0 | Inst Max | 1680 | Acre-Ft | 3580 |

# RUNOFF – DAILY DISCHARGE

Los Angeles County Dept of Public Works USDAY V115 Output 04/20/2021

Summary Report

Site: F42B San Gabriel River Above Spring Street
USGS #:
Beginning Date: 10/01/2019
Ending Date: 09/30/2020

Daily Mean Discharge in Cubic feet/second Water Year Oct 2019 to Sep 2020

| Day | OCT | NOV | DEC | JAN | FEB | MAR | APR | MAY | JUN | JUL | AUG | SEP |
|---|---|---|---|---|---|---|---|---|---|---|---|---|
| 1 | 39.6 | 1.87 | 2.42 | 14.2 | 30.5 | 48.3 | 39.6 | 24.3 | 8.17 | 7.99 | 9.01 | 9.05 |
| 2 | 33.5 | 1.91 | 2.42 | 15.6 | 33.8 | 44.0 | 41.8 | 21.4 | 8.18 | 7.56 | 13.0 | 8.69 |
| 3 | 32.9 | 2.05 | 13.4 | 17.3 | 34.4 | 43.5 | 44.7 | 16.9 | 7.15 | 6.81 | 13.6 | 8.59 |
| 4 | 32.8 | 2.11 | 154 | 16.9 | 38.4 | 43.4 | 46.1 | 14.7 | 7.71 | 6.30 | 12.5 | 6.27 |
| 5 | 34.7 | 2.65 | 34.9 | 16.8 | 38.1 | 41.0 | 47.1 | 14.9 | 8.78 | 8.47 | 12.7 | 8.23 |
| 6 | 34.0 | 2.65 | 34.9 | 18.5 | 38.8 | 40.3 | 145 | 14.1 | 9.61 | 10.3 | 14.1 | 12.1 |
| 7 | 27.6 | 2.67 | 34.9 | 18.0 | 39.7 | 40.8 | 157 | 12.6 | 8.67 | 9.52 | 14.6 | 14.5 |
| 8 | 16.7 | 3.05 | 42.8 | 17.7 | 39.8 | 38.3 | 40.0 | 13.4 | 9.13 | 10.3 | 12.8 | 15.6 |
| 9 | 7.56 | 2.63 | 35.0 | 18.1 | 42.4 | 34.7 | 183 | 13.9 | 9.38 | 9.57 | 13.1 | 14.1 |
| 10 | 15.2 | 1.82 | 30.7 | 17.4 | 43.0 | 40.8 | 55.7 | 13.6 | 8.56 | 8.48 | 14.0 | 14.5 |
| 11 | 16.7 | 1.95 | 17.9 | 17.8 | 50.9 | 26.3 | 60.7 | 14.9 | 8.02 | 8.46 | 13.7 | 15.9 |
| 12 | 16.9 | 2.08 | 17.5 | 17.0 | 51.2 | 190 | 88.5 | 17.6 | 8.16 | 8.31 | 13.7 | 15.9 |
| 13 | 18.2 | 2.21 | 15.0 | 17.3 | 52.5 | 93.5 | 47.4 | 16.6 | 9.89 | 7.97 | 14.3 | 16.8 |
| 14 | 16.2 | 2.34 | 16.3 | 17.9 | 54.6 | 17.5 | 23.2 | 17.2 | 7.54 | 8.78 | 13.6 | 17.8 |
| 15 | 15.1 | 2.48 | 16.1 | 18.1 | 58.0 | 18.2 | 23.7 | 16.8 | 5.50 | 9.84 | 12.5 | 19.8 |
| 16 | 14.3 | 2.65 | 16.7 | 18.2 | 56.0 | 46.6 | 24.8 | 18.7 | 5.26 | 8.98 | 13.7 | 18.4 |
| 17 | 15.0 | 2.91 | 16.6 | 28.0 | 57.7 | 24.3 | 26.9 | 18.2 | 7.21 | 9.09 | 12.9 | 21.8 |
| 18 | 14.3 | 3.22 | 17.1 | 17.0 | 63.2 | 17.4 | 28.4 | 26.7 | 6.84 | 9.49 | 12.6 | 22.0 |
| 19 | 14.3 | 3.54 | 17.0 | 14.9 | 59.1 | 57.0 | 29.1 | 18.3 | 6.76 | 8.57 | 11.8 | 22.2 |
| 20 | 16.0 | 3.89 | 17.0 | 13.6 | 51.8 | 20.7 | 35.6 | 14.3 | 6.97 | 9.51 | 12.5 | 21.6 |
| 21 | 12.0 | 4.25 | 17.0 | 15.2 | 57.0 | 18.5 | 38.8 | 11.4 | 7.59 | 10.6 | 13.3 | 20.6 |
| 22 | 11.2 | 4.63 | 18.4 | 14.2 | 69.8 | 77.3 | 39.2 | 10.6 | 6.52 | 10.7 | 12.9 | 18.6 |
| 23 | 10.7 | 5.02 | 192 | 14.4 | 54.5 | 54.3 | 40.4 | 9.66 | 6.42 | 12.0 | 10.2 | 17.8 |
| 24 | 8.43 | 5.43 | 21.6 | 17.3 | 53.8 | 20.6 | 41.1 | 9.81 | 6.87 | 11.5 | 8.25 | 16.5 |
| 25 | 1.98 | 5.87 | 20.9 | 16.1 | 57.2 | 22.1 | 40.1 | 8.48 | 7.48 | 12.3 | 7.96 | 18.4 |
| 26 | 2.03 | 5.78F | 650 | 15.7 | 53.8 | 24.5 | 37.7 | 9.68 | 7.24 | 11.8 | 8.09 | 15.8 |
| 27 | 2.23 | 4.84F | 23.2 | 17.5 | 52.1 | 26.4 | 36.3 | 9.58 | 6.96 | 10.8 | 8.19 | 14.7 |
| 28 | 2.43 | 120 | 17.2 | 20.6 | 52.9 | 28.4 | 36.6 | 8.94 | 7.31 | 11.7 | 7.86 | 11.7 |
| 29 | 2.39 | 2.42 | 16.2 | 23.9 | 52.1 | 30.4 | 32.9 | 9.46 | 6.14 | 11.5 | 7.74 | 12.2 |
| 30 | 2.34 | 2.42 | 17.5 | 26.3 | ------ | 35.0 | 28.6 | 9.05 | 6.77 | 11.2 | 8.46 | 11.8 |
| 31 | 1.89 | ------ | 18.0 | 27.5 | ------ | 36.1 | ------ | 8.57 | ------ | 12.2 | 6.99 | ------ |
| Total | 489.18 | 211.34 | 1564.64 | 559.0 | 1437.1 | 1300.2 | 1560.0 | 444.33 | 226.79 | 300.60 | 360.65 | 461.93 |
| Mean | 15.8 | 7.04 | 50.5 | 18.0 | 49.6 | 41.9 | 52.0 | 14.3 | 7.56 | 9.70 | 11.6 | 15.4 |
| Max | 39.6 | 120 | 650 | 28.0 | 69.8 | 190 | 183 | 26.7 | 9.89 | 12.3 | 14.6 | 22.2 |
| Min | 1.89 | 1.82 | 2.42 | 13.6 | 30.5 | 17.4 | 23.2 | 8.48 | 5.26 | 6.30 | 6.99 | 6.27 |
| Acre-Ft | 970 | 419 | 3100 | 1110 | 2850 | 2580 | 3090 | 881 | 450 | 596 | 715 | 916 |

| | | | | | | | | | | | | |
|---|---|---|---|---|---|---|---|---|---|---|---|---|
| Wtr Year 2020 | Total | 8915.76 | Mean | 24.4 | Max | 650 | Min | 1.82 | Inst Max | 3040 | Acre-Ft | 17680 |
| Cal Year 2019 | Total | 14969.42 | Mean | 41.0 | Max | 1150 | Min | 1.82 | Inst Max | 3550 | Acre-Ft | 29690 |

# RUNOFF – DAILY DISCHARGE

Los Angeles County Dept of Public Works USDAY V115 Output 04/20/2021

Summary Report

Site: F263C San Gabriel River Below San Gabriel River Parkway
USGS #:
Beginning Date: 10/01/2019
Ending Date: 09/30/2020

Daily Mean Discharge in Cubic feet/second Water Year Oct 2019 to Sep 2020

| Day | OCT | NOV | DEC | JAN | FEB | MAR | APR | MAY | JUN | JUL | AUG | SEP |
|---|---|---|---|---|---|---|---|---|---|---|---|---|
| 1 | 0 | 0 | 7.94 | 130 | 0 | 0 | 0 | 0 | 0 | 0 | 0 | 0 |
| 2 | 0 | 0 | 8.11 | 130 | 0 | 0 | 0 | 0 | 0 | 0 | 0 | 0 |
| 3 | 0 | 0 | 3.52 | 13.3 | .74 | 0 | 0 | 0 | 0 | 0 | 0 | 0 |
| 4 | 0 | 0 | 486 | 8.55 | 2.51 | 0 | 0 | 0 | 0 | 0 | 0 | 0 |
| 5 | 0 | 0 | 149 | 7.26 | 1.24 | 0 | 0 | 0 | 0 | 0 | 0 | 0 |
| 6 | 0 | 0 | 22.9 | 7.96 | 1.31 | 0 | 905 | 0 | 0 | 0 | 0 | 0 |
| 7 | 0 | 0 | 67.0 | 5.87 | 1.42 | 0 | 229 | 0 | 0 | 0 | 0 | 0 |
| 8 | 0 | 0 | 61.3 | 3.90 | 2.14 | 0 | 159 | 0 | 0 | 0 | 0 | 0 |
| 9 | 0 | 0 | 24.3 | 3.64 | 4.15 | 2.02 | 112 | 0 | 0 | 0 | 0 | 0 |
| 10 | 0 | 0 | 9.15 | 3.77 | 4.68 | 167 | 204 | 0 | 0 | 0 | 0 | 0 |
| 11 | 0 | 0 | 5.18 | 2.50 | 2.04 | 32.6 | 29.4 | 0 | 0 | 0 | 0 | 0 |
| 12 | 0 | 0 | .45 | 4.17 | 0 | 636 | .84 | 0 | 0 | 0 | 0 | 0 |
| 13 | 0 | 0 | 3.41 | 6.95 | 1.27 | 442 | .02 | 0 | 0 | 0 | 0 | 0 |
| 14 | 0 | 0 | 7.11 | 2.69 | 1.58 | 115 | 0 | 0 | 0 | 0 | 0 | 0 |
| 15 | 0 | 0 | 5.28 | 4.03 | 1.65 | 47.3 | 0 | 0 | 0 | 0 | 0 | 0 |
| 16 | 0 | 0 | 5.30 | 4.47 | .72 | 254 | 0 | 0 | 0 | 0 | 0 | 0 |
| 17 | 0 | 0 | 5.50 | 55.5 | 2.89 | 314 | 0 | 0 | 0 | 0 | 0 | 0 |
| 18 | 0 | 0 | 1.57 | 7.78 | 4.07 | 22.8 | 0 | 0 | 0 | 0 | 0 | 0 |
| 19 | 0 | 0 | 0 | 6.52 | .81 | 319 | 0 | 0 | 0 | 0 | 0 | 0 |
| 20 | 0 | 263 | .43 | 6.23 | 0 | 280 | 0 | 0 | 0 | 0 | 0 | 0 |
| 21 | 0 | 33.6 | 0 | 7.05 | 0 | 26.5 | 4.26 | 0 | 0 | 0 | 0 | 0 |
| 22 | 0 | 0 | 1.92 | 3.81 | 2.17 | 58.2 | .14 | 0 | 0 | 0 | 0 | 0 |
| 23 | 0 | 0 | 453 | 3.87 | 5.13 | 551 | 0 | 0 | 0 | 0 | 0 | 0 |
| 24 | 0 | 0 | 141 | 5.18 | 4.84 | 32.9 | 0 | 0 | 0 | 0 | 0 | 0 |
| 25 | 0 | 0 | 13.4 | 3.22 | 2.16 | 26.7 | 0 | 0 | 0 | 0 | 0 | 0 |
| 26 | 0 | 0 | 626 | 3.56 | 0 | 18.3 | 0 | 0 | 0 | 0 | 0 | 0 |
| 27 | 0 | 167 | 46.1 | 3.61 | 0 | 18.2 | 0 | 0 | 0 | 0 | 0 | 0 |
| 28 | 0 | 576 | 19.1 | 3.95 | 0 | 15.7 | 0 | 0 | 0 | 0 | 0 | 0 |
| 29 | 0 | 251 | 10.9 | 1.80 | 0 | 10.2 | 0 | 0 | 0 | 0 | 0 | 0 |
| 30 | 0 | 27.8 | 7.92 | 2.02 | ------ | 13.5 | 0 | 0 | 0 | 0 | 0 | 0 |
| 31 | 0 | ------ | 6.50 | 1.65 | ------ | 10.1 | ------ | 0 | ------ | 0 | 0 | ------ |
| Total | 0 | 1318.4 | 2199.29 | 454.81 | 47.52 | 3413.02 | 1643.66 | 0 | 0 | 0 | 0 | 0 |
| Mean | 0 | 43.9 | 70.9 | 14.7 | 1.64 | 110 | 54.8 | 0 | 0 | 0 | 0 | 0 |
| Max | 0 | 576 | 626 | 130 | 5.13 | 636 | 905 | 0 | 0 | 0 | 0 | 0 |
| Min | 0 | 0 | 0 | 1.65 | 0 | 0 | 0 | 0 | 0 | 0 | 0 | 0 |
| Acre-Ft | 0 | 2620 | 4360 | 902 | 94 | 6770 | 3260 | 0 | 0 | 0 | 0 | 0 |

| | | | | | | | | | | | | |
|---|---|---|---|---|---|---|---|---|---|---|---|---|
| Wtr Year 2020 | Total | 9076.70 | Mean | 24.8 | Max | 905 | Min | 0 | Inst Max | 2770 | Acre-Ft | 18000 |
| Cal Year 2019 | Total | 16783.03 | Mean | 46.0 | Max | 1270 | Min | 0 | Inst Max | 2350 | Acre-Ft | 33290 |

# RUNOFF – DAILY DISCHARGE

Los Angeles County Dept of Public Works USDAY V115 Output 04/20/2021

Summary Report

Site: F190 San Gabriel River at Foothill Boulevard
USGS #:
Beginning Date: 10/01/2019
Ending Date: 09/30/2020

Daily Mean Discharge in Cubic feet/second Water Year Oct 2019 to Sep 2020

| Day | OCT | NOV | DEC | JAN | FEB | MAR | APR | MAY | JUN | JUL | AUG | SEP |
|---|---|---|---|---|---|---|---|---|---|---|---|---|
| 1 | 235 | 237 | 123 | 136 | 34.8 | 0 | 0 | 117 | 0 | 85.9 | 11.5 | 16.2 |
| 2 | 236 | 237 | 124 | 77.6 | 34.8 | 0 | 0 | 3.79 | 22.6 | 86.3 | 7.19 | 15.4 |
| 3 | 237 | 238 | 124 | 9.01 | 38.4 | 0 | 0 | 0 | 127 | 85.9 | 5.67 | 9.10 |
| 4 | 237 | 112 | 147 | 8.68 | 40.2 | 0 | 0 | 0 | 145 | 85.5 | 4.91 | 5.79 |
| 5 | 236 | 9.20 | 133 | 8.46 | 39.0 | 0 | 0 | 0 | 164 | 85.5 | 4.63 | 5.56 |
| 6 | 235 | 66.3 | 128 | 8.12 | 36.8 | 0 | 62.4 | 0 | 164 | 49.6 | 4.58 | 4.57 |
| 7 | 234 | 135 | 130 | 7.94 | 37.0 | 0 | 13.0 | 0 | 163 | 171 | 4.58 | .91 |
| 8 | 234 | 132 | 133 | 7.91 | 37.9 | 0 | 14.0 | 0 | 131 | 357 | 4.58 | 0 |
| 9 | 230 | 132 | 135 | 7.77 | 38.9 | 0 | 14.1 | 0 | 165 | 358 | 4.58 | 0 |
| 10 | 228 | 132 | 135 | 7.86 | 39.6 | 0 | 14.0 | 0 | 163 | 355 | 4.58 | 0 |
| 11 | 226 | 132 | 134 | 7.48 | 16.6 | 0 | 10.3 | 0 | 154 | 354 | 4.58 | 0 |
| 12 | 226 | 131 | 135 | 7.11 | 1.01 | 2.02 | 9.08 | 0 | 163 | 352 | 4.58 | 8.31 |
| 13 | 227 | 130 | 135 | 6.85 | 0 | 3.86 | 8.11 | 0 | 163 | 350 | 4.58 | 168 |
| 14 | 227 | 132 | 135 | 6.64 | 0 | .11 | 5.75 | 0 | 162 | 347 | 4.58 | 453 |
| 15 | 228 | 131 | 133 | 6.49 | 0 | 0 | 4.95 | 0 | 162 | 343 | 4.58 | 440 |
| 16 | 228 | 131 | 132 | 6.40 | 0 | .59 | 4.26 | 0 | 162 | 342 | 4.58 | 431 |
| 17 | 229 | 132 | 132 | 6.55 | 0 | .84 | 3.62 | 0 | 162 | 342 | 4.58 | 431 |
| 18 | 229 | 131 | 132 | 5.92 | 0 | 0 | 2.83 | 0 | 162 | 338 | 4.88 | 431 |
| 19 | 229 | 131 | 133 | 5.67 | 0 | 0 | 1.80 | 0 | 161 | 336 | 7.01 | 431 |
| 20 | 230 | 137 | 133 | 5.41 | 0 | 0 | .06 | 0 | 160 | 343 | 13.6 | 431 |
| 21 | 230 | 130 | 133 | 15.1 | 0 | 0 | 0 | 0 | 158 | 357 | 16.0 | 434 |
| 22 | 230 | 128 | 133 | 32.5 | 0 | 0 | 0 | 0 | 156 | 354 | 16.2 | 438 |
| 23 | 230 | 127 | 146 | 33.5 | 0 | 2.55 | 0 | 0 | 154 | 353 | 16.2 | 422 |
| 24 | 231 | 127 | 136 | 34.0 | 0 | 0 | 0 | 0 | 150 | 353 | 16.2 | 377 |
| 25 | 231 | 126 | 192 | 33.7 | 0 | 0 | 0 | 0 | 136 | 360 | 16.2 | 368 |
| 26 | 231 | 126 | 204 | 33.3 | 0 | 0 | 0 | 0 | 130 | 360 | 16.2 | 369 |
| 27 | 233 | 133 | 148 | 33.2 | 0 | 0 | 43.6 | 0 | 124 | 366 | 16.2 | 374 |
| 28 | 234 | 149 | 141 | 33.7 | 0 | 0 | 140 | 0 | 123 | 379 | 16.2 | 400 |
| 29 | 235 | 129 | 137 | 33.6 | 0 | 0 | 144 | 0 | 125 | 384 | 16.2 | 386 |
| 30 | 236 | 123 | 137 | 33.8 | ------ | 0 | 145 | 0 | 102 | 393 | 16.2 | 201 |
| 31 | 237 | ------ | 137 | 34.4 | ------ | 0 | ------ | 0 | ------ | 236 | 16.2 | ------ |
| Total | 7179 | 4046.50 | 4290 | 694.67 | 395.01 | 9.97 | 640.86 | 120.79 | 4213.6 | 9061.7 | 292.35 | 7050.84 |
| Mean | 232 | 135 | 138 | 22.4 | 13.6 | .32 | 21.4 | 3.90 | 140 | 292 | 9.43 | 235 |
| Max | 237 | 238 | 204 | 136 | 40.2 | 3.86 | 145 | 117 | 165 | 393 | 16.2 | 453 |
| Min | 226 | 9.20 | 123 | 5.41 | 0 | 0 | 0 | 0 | 0 | 49.6 | 4.58 | 0 |
| Acre-Ft | 14240 | 8030 | 8510 | 1380 | 783 | 20 | 1270 | 240 | 8360 | 17970 | 580 | 13990 |

| | | | | | | | | | | | | |
|---|---|---|---|---|---|---|---|---|---|---|---|---|
| Wtr Year 2020 | Total | 37995.29 | Mean | 104 | Max | 453 | Min | 0 | Inst Max | 501 | Acre-Ft | 75360 |
| Cal Year 2019 | Total | 96139.87 | Mean | 263 | Max | 705 | Min | 0 | Inst Max | 847 | Acre-Ft | 190700 |

# RUNOFF – DAILY DISCHARGE

Los Angeles County Dept of Public Works USDAY V115 Output 04/20/2021

Summary Report

Site: E281 San Gabriel River below Santa Fe Dam
USGS #:
Beginning Date: 10/01/2019
Ending Date: 09/30/2020

Daily Mean Discharge in Cubic feet/second Water Year Oct 2019 to Sep 2020

| Day | OCT | NOV | DEC | JAN | FEB | MAR | APR | MAY | JUN | JUL | AUG | SEP |
|---|---|---|---|---|---|---|---|---|---|---|---|---|
| 1 | 0 | 0 | 0 | 0 | 0 | 0 | 0 | 0 | 0 | 0 | 0 | 0 |
| 2 | 0 | 0 | 0 | 0 | 0 | 0 | 0 | 0 | 0 | 0 | 0 | 0 |
| 3 | 0 | 0 | 0 | 0 | 0 | 0 | 0 | 0 | 0 | 0 | 0 | 0 |
| 4 | 0 | 0 | 5.93 | 0 | 0 | 0 | 0 | 0 | 0 | 0 | 0 | 0 |
| 5 | 0 | 0 | .11 | 0 | 0 | 0 | 0 | 0 | 0 | 0 | 0 | 0 |
| 6 | 0 | 0 | 0 | 0 | 0 | 0 | 60.6 | 0 | 0 | 0 | 0 | 0 |
| 7 | 0 | 0 | 0 | 0 | 0 | 0 | 88.5 | 0 | 0 | 0 | 0 | 0 |
| 8 | 0 | 0 | 0 | 0 | 0 | 0 | 23.0 | 0 | 0 | 0 | 0 | 0 |
| 9 | 0 | 0 | 0 | 0 | 0 | 0 | 11.7 | 0 | 0 | 0 | 0 | 0 |
| 10 | 0 | 0 | 0 | 0 | 0 | 0 | 13.3 | 0 | 0 | 0 | 0 | 0 |
| 11 | 0 | 0 | 0 | 0 | 0 | 0 | 2.54 | 0 | 0 | 0 | 0 | 0 |
| 12 | 0 | 0 | 0 | 0 | 0 | 1.79 | 0 | 0 | 0 | 0 | 0 | 0 |
| 13 | 0 | 0 | 0 | 0 | 0 | .03 | 0 | 0 | 0 | 0 | 0 | 0 |
| 14 | 0 | 0 | 0 | 0 | 0 | 0 | 0 | 0 | 0 | 0 | 0 | 0 |
| 15 | 0 | 0 | 0 | 0 | 0 | 0 | 0 | 0 | 0 | 0 | 0 | 0 |
| 16 | 0 | 0 | 0 | 0 | 0 | .83 | 0 | 0 | 0 | 0 | 0 | 0 |
| 17 | 0 | 0 | 0 | 0 | 0 | .68 | 0 | 0 | 0 | 0 | 0 | 0 |
| 18 | 0 | 0 | 0 | 0 | 0 | 0 | 0 | 0 | 0 | 0 | 0 | 0 |
| 19 | 0 | 0 | 0 | 0 | 0 | 0 | 0 | 0 | 0 | 0 | 0 | 0 |
| 20 | 0 | .47 | 0 | 0 | 0 | 0 | 0 | 0 | 0 | 0 | 0 | 0 |
| 21 | 0 | 0 | 0 | 0 | 0 | 0 | 0 | 0 | 0 | 0 | 0 | 0 |
| 22 | 0 | 0 | 0 | 0 | 0 | 0 | 0 | 0 | 0 | 0 | 0 | 0 |
| 23 | 0 | 0 | 3.78 | 0 | 0 | .68 | 0 | 0 | 0 | 0 | 0 | 0 |
| 24 | 0 | 0 | .28 | 0 | 0 | 0 | 0 | 0 | 0 | 0 | 0 | 0 |
| 25 | 0 | 0 | 0 | 0 | 0 | 0 | 0 | 0 | 0 | 0 | 0 | 0 |
| 26 | 0 | 0 | 60.9 | 0 | 0 | 0 | 0 | 0 | 0 | 0 | 0 | 0 |
| 27 | 0 | 0 | 18.7 | 0 | 0 | 0 | 0 | 0 | 0 | 0 | 0 | 0 |
| 28 | 0 | 6.72 | .01 | 0 | 0 | 0 | 0 | 0 | 0 | 0 | 0 | 0 |
| 29 | 0 | 0 | 0 | 0 | 0 | 0 | 0 | 0 | 0 | 0 | 0 | 0 |
| 30 | 0 | 0 | 0 | 0 | ------ | 0 | 0 | 0 | 0 | 0 | 0 | 0 |
| 31 | 0 | ------ | 0 | 0 | ------ | 0 | ------ | 0 | ------ | 0 | 0 | ------ |
| Total | 0 | 7.19 | 89.71 | 0 | 0 | 4.01 | 199.64 | 0 | 0 | 0 | 0 | 0 |
| Mean | 0 | .24 | 2.89 | 0 | 0 | .13 | 6.65 | 0 | 0 | 0 | 0 | 0 |
| Max | 0 | 6.72 | 60.9 | 0 | 0 | 1.79 | 88.5 | 0 | 0 | 0 | 0 | 0 |
| Min | 0 | 0 | 0 | 0 | 0 | 0 | 0 | 0 | 0 | 0 | 0 | 0 |
| Acre-Ft | 0 | 14 | 178 | 0 | 0 | 8.0 | 396 | 0 | 0 | 0 | 0 | 0 |

| | | | | | | | | | | | | |
|---|---|---|---|---|---|---|---|---|---|---|---|---|
| Wtr Year 2020 | Total | 300.55 | Mean | .82 | Max | 88.5 | Min | 0 | Inst Max | 118 | Acre-Ft | 596 |
| Cal Year 2019 | Total | 15678.25 | Mean | 43.0 | Max | 636 | Min | 0 | Inst Max | 1230 | Acre-Ft | 31100 |

# RUNOFF – DAILY DISCHARGE

Los Angeles County Dept of Public Works USDAY V115 Output 08/05/2021

Summary Report

Site: F209 San Gabriel River - West Fork Below Cogswell Dam
USGS #:
Beginning Date: 10/01/2019
Ending Date: 09/30/2020

Daily Mean Discharge in Cubic feet/second Water Year Oct 2019 to Sep 2020

| Day | OCT | NOV | DEC | JAN | FEB | MAR | APR | MAY | JUN | JUL | AUG | SEP |
|---|---|---|---|---|---|---|---|---|---|---|---|---|
| 1 | 60.9 | 23.6 | 6.91 | 7.92* | 8.38 | 9.96 | 8.74 | 8.74 | 15.0F | 13.6F | 13.5F | 13.2F |
| 2 | 53.1 | 9.90 | 6.91 | 7.92* | 8.30 | 9.83 | 8.74 | 8.74 | 14.9F | 13.5F | 13.5F | 13.2F |
| 3 | 46.4 | 9.90 | 6.93 | 7.92* | 8.35 | 12.1* | 8.74 | 8.74 | 14.8F | 13.5F | 13.4F | 13.2F |
| 4 | 25.6 | 9.90 | 7.79 | 7.92* | 8.63 | 11.5 | 8.74 | 8.74 | 14.7F | 13.6F | 13.4F | 13.2F |
| 5 | 18.0 | 9.90 | 7.05 | 7.92* | 8.89 | 14.6 | 8.74 | 8.74 | 14.7F | 13.6F | 13.2F | 13.2F |
| 6 | 18.0 | 9.86 | 7.37 | 7.92* | 8.78 | 11.9 | 8.74 | 8.74 | 14.7F | 13.6F | 13.2F | 13.4F |
| 7 | 43.1 | 9.60 | 5.25 | 7.92* | 8.41 | 14.4 | 8.74 | 12.0F | 14.6F | 13.6F | 13.3F | 14.7F |
| 8 | 64.9 | 9.32 | 3.24 | 7.92* | 8.42 | 10.1 | 8.74 | 15.5F | 14.4F | 13.6F | 13.6F | 16.2F |
| 9 | 62.1 | 9.25 | 5.90 | 7.92* | 9.00 | 11.3 | 8.74 | 15.5F | 14.4F | 13.6F | 13.6F | 17.9F |
| 10 | 67.5 | 9.00 | 7.40 | 7.92* | 8.40 | 8.74 | 8.74 | 15.5F | 14.4F | 13.6F | 13.5F | 19.6F |
| 11 | 62.0 | 8.74 | 7.40 | 7.92* | 8.43 | 8.74 | 8.74 | 15.5F | 14.6F | 13.6F | 13.4F | 21.4F |
| 12 | 51.6 | 8.15 | 7.34 | 7.92* | 8.59 | 8.74 | 8.74 | 15.3F | 14.5F | 13.4F | 13.2F | 23.4F |
| 13 | 50.4 | 7.24 | 7.25 | 7.92* | 9.38 | 8.74 | 8.74 | 15.1F | 14.7F | 13.5F | 13.2F | 25.5F |
| 14 | 51.6 | 7.04 | 7.31 | 7.92* | 9.11 | 8.74 | 8.74 | 15.1F | 14.7F | 13.9F | 13.2F | 27.7F |
| 15 | 56.6 | 7.15 | 7.29 | 7.92* | 9.34 | 8.74 | 8.74 | 15.1F | 14.7F | 14.0F | 13.2F | 29.7F |
| 16 | 62.8 | 7.15 | 7.33 | 7.92* | 8.65 | 9.15 | 8.74 | 15.1F | 14.7F | 14.0F | 13.3F | 31.7F |
| 17 | 59.1 | 7.15 | 7.33 | 7.92* | 8.57 | 8.63 | 8.74 | 15.3F | 14.6F | 13.8F | 13.2F | 33.8F |
| 18 | 54.6 | 7.14 | 7.34 | 7.92* | 8.62* | 10.1 | 8.74 | 15.5F | 14.4F | 13.8F | 13.2F | 36.0F |
| 19 | 55.6 | 7.27 | 7.44 | 7.92* | 8.19* | 16.2 | 8.74 | 15.5F | 14.4F | 13.7F | 13.2F | 38.2F |
| 20 | 59.3 | 6.47 | 7.46 | 7.92* | 8.19* | 99.0 | 8.74 | 15.3F | 14.4F | 13.6F | 13.2F | 40.5F |
| 21 | 32.7 | 6.45 | 7.59 | 7.92* | 8.19* | 9.14* | 8.74 | 15.1F | 14.4F | 13.5F | 13.2F | 42.8F |
| 22 | 41.4 | 7.14 | 7.59 | 7.92* | 8.62* | 9.13 | 8.74 | 15.1F | 14.0F | 13.3F | 13.2F | 67.2* |
| 23 | 54.0 | 7.14 | 8.08 | 7.92* | 10.1 | 8.74 | 8.74 | 15.1F | 14.0F | 13.2F | 13.2F | 71.9* |
| 24 | 53.6 | 6.91 | 7.66 | 7.92* | 9.19 | 8.74 | 8.74 | 15.1F | 14.0F | 13.2F | 13.2F | 71.9* |
| 25 | 47.0 | 6.91 | 7.27 | 7.92* | 9.37 | 8.74 | 8.74 | 15.1F | 14.0F | 13.2F | 13.2F | 71.9* |
| 26 | 44.1 | 6.91 | 9.94* | 7.92* | 9.43 | 8.74 | 8.74 | 15.0F | 13.9F | 13.2F | 13.2F | 71.8* |
| 27 | 27.9 | 7.42 | 8.89* | 7.92* | 9.38 | 8.74 | 8.74 | 14.8F | 13.8F | 13.2F | 13.2F | 63.5* |
| 28 | 45.7 | 7.97 | 7.92* | 7.92* | 9.75 | 8.74 | 8.74 | 14.7F | 13.6F | 13.2F | 13.2F | 63.5* |
| 29 | 61.0 | 7.10 | 7.92* | 8.34* | 9.27 | 8.74 | 8.74 | 14.8F | 13.6F | 13.2F | 13.2F | 63.5* |
| 30 | 58.2 | 6.85 | 7.92* | 8.49 | ------ | 8.74 | 8.74 | 14.8F | 13.6F | 13.2F | 13.2F | 63.5* |
| 31 | 54.8 | ------ | 7.92* | 8.31 | ------ | 8.74 | ------ | 14.9F | ------ | 13.2F | 13.2F | ------ |
| Total | 1543.6 | 254.53 | 226.94 | 246.90 | 255.93 | 398.14 | 262.20 | 428.24 | 431.2 | 418.7 | 411.7 | 1107.2 |
| Mean | 49.8 | 8.48 | 7.32 | 7.96 | 8.83 | 12.8 | 8.74 | 13.8 | 14.4 | 13.5 | 13.3 | 36.9 |
| Max | 67.5 | 23.6 | 9.94 | 8.49 | 10.1 | 99.0 | 8.74 | 15.5 | 15.0 | 14.0 | 13.6 | 71.9 |
| Min | 18.0 | 6.45 | 3.24 | 7.92 | 8.19 | 8.63 | 8.74 | 8.74 | 13.6 | 13.2 | 13.2 | 13.2 |
| Acre-Ft | 3060 | 505 | 450 | 490 | 508 | 790 | 520 | 849 | 855 | 830 | 817 | 2200 |

| | | | | | | | | | | | | |
|---|---|---|---|---|---|---|---|---|---|---|---|---|
| Wtr Year 2020 | Total | 5985.28 | Mean | 16.4 | Max | 99.0 | Min | 3.24 | Inst Max | 905 | Acre-Ft | 11870 |
| Cal Year 2019 | Total | 11395.05 | Mean | 31.2 | Max | 266 | Min | 1.38 | Inst Max | 985 | Acre-Ft | 22600 |

F , * : Indicates estimated Flow.

# RUNOFF – DAILY DISCHARGE

Los Angeles County Dept of Public Works USDAY V115 Output 04/20/2021

Summary Report

Site: G44B San Gabriel River Above Whittier Narrows Dam
USGS #:
Beginning Date: 10/01/2019
Ending Date: 09/30/2020

Daily Mean Discharge in Cubic feet/second Water Year Oct 2019 to Sep 2020

| Day | OCT | NOV | DEC | JAN | FEB | MAR | APR | MAY | JUN | JUL | AUG | SEP |
|---|---|---|---|---|---|---|---|---|---|---|---|---|
| 1 | 0 | 0 | 0 | 0 | 0 | 0 | 0 | 0 | 0 | 0 | 0 | 0 |
| 2 | 0 | 0 | 0 | 0 | 0 | 0 | 0 | 0 | 0 | 0 | 0 | 0 |
| 3 | 0 | 0 | 0 | 0 | 0 | 0 | 0 | 0 | 0 | 0 | 0 | 0 |
| 4 | 0 | 0 | 958 | 0 | 0 | 0 | 0 | 0 | 0 | 0 | 0 | 0 |
| 5 | 0 | 0 | 0 | 0 | 0 | 0 | 0 | 0 | 0 | 0 | 0 | 0 |
| 6 | 0 | 0 | 0 | 0 | 0 | 0 | 432 | 0 | 0 | 0 | 0 | 0 |
| 7 | 0 | 0 | 0 | 0 | 0 | 0 | 98.8 | 0 | 0 | 0 | 0 | 0 |
| 8 | 0 | 0 | 0 | 0 | 0 | 0 | 94.1 | 0 | 0 | 0 | 0 | 0 |
| 9 | 0 | 0 | 0 | 0 | 0 | 0 | 552 | 0 | 0 | 0 | 0 | 0 |
| 10 | 0 | 0 | 0 | 0 | 0 | 0 | 184 | 0 | 0 | 0 | 0 | 0 |
| 11 | 0 | 0 | 0 | 0 | 0 | 0 | 0 | 0 | 0 | 0 | 0 | 0 |
| 12 | 0 | 0 | 0 | 0 | 0 | 953 | 0 | 0 | 0 | 0 | 0 | 0 |
| 13 | 0 | 0 | 0 | 0 | 0 | 367 | 0 | 0 | 0 | 0 | 0 | 0 |
| 14 | 0 | 0 | 0 | 0 | 0 | 0 | 0 | 0 | 0 | 0 | 0 | 0 |
| 15 | 0 | 0 | 0 | 0 | 0 | 0 | 0 | 0 | 0 | 0 | 0 | 0 |
| 16 | 0 | 0 | 0 | 0 | 0 | 230 | 0 | 0 | 0 | 0 | 0 | 0 |
| 17 | 0 | 0 | 0 | 0 | 0 | 4.27 | 0 | 0 | 0 | 0 | 0 | 0 |
| 18 | 0 | 0 | 0 | 0 | 0 | 0 | 0 | 0 | 0 | 0 | 0 | 0 |
| 19 | 0 | 0 | 0 | 0 | 0 | 99.9 | 0 | 0 | 0 | 0 | 0 | 0 |
| 20 | 0 | 118 | 0 | 0 | 0 | 7.90 | 0 | 0 | 0 | 0 | 0 | 0 |
| 21 | 0 | 0 | 0 | 0 | 0 | 0 | 0 | 0 | 0 | 0 | 0 | 0 |
| 22 | 0 | 0 | 0 | 0 | 0 | 95.9 | 0 | 0 | 0 | 0 | 0 | 0 |
| 23 | 0 | 0 | 373 | 0 | 0 | 234 | 0 | 0 | 0 | 0 | 0 | 0 |
| 24 | 0 | 0 | 0 | 0 | 0 | 0 | 0 | 0 | 0 | 0 | 0 | 0 |
| 25 | 0 | 0 | 0 | 0 | 0 | 0 | 0 | 0 | 0 | 0 | 0 | 0 |
| 26 | 0 | 0 | 2640 | 0 | 0 | 0 | 0 | 0 | 0 | 0 | 0 | 0 |
| 27 | 0 | 66.6 | 0 | 0 | 0 | 0 | 0 | 0 | 0 | 0 | 0 | 0 |
| 28 | 0 | 1200 | 0 | 0 | 0 | 0 | 0 | 0 | 0 | 0 | 0 | 0 |
| 29 | 0 | 40.2 | 0 | 0 | 0 | 0 | 0 | 0 | 0 | 0 | 0 | 0 |
| 30 | 0 | 0 | 0 | 0 | ------ | 0 | 0 | 0 | 0 | 0 | 0 | 0 |
| 31 | 0 | ------ | 0 | 0 | ------ | 0 | ------ | 0 | ------ | 0 | 0 | ------ |
| Total | 0 | 1424.8 | 3971 | 0 | 0 | 1991.97 | 1360.9 | 0 | 0 | 0 | 0 | 0 |
| Mean | 0 | 47.5 | 128 | 0 | 0 | 64.3 | 45.4 | 0 | 0 | 0 | 0 | 0 |
| Max | 0 | 1200 | 2640 | 0 | 0 | 953 | 552 | 0 | 0 | 0 | 0 | 0 |
| Min | 0 | 0 | 0 | 0 | 0 | 0 | 0 | 0 | 0 | 0 | 0 | 0 |
| Acre-Ft | 0 | 2830 | 7880 | 0 | 0 | 3950 | 2700 | 0 | 0 | 0 | 0 | 0 |

| | | | | | | | | | | | | |
|---|---|---|---|---|---|---|---|---|---|---|---|---|
| Wtr Year 2020 | Total | 8748.67 | Mean | 23.9 | Max | 2640 | Min | 0 | Inst Max | 11300 | Acre-Ft | 17350 |
| Cal Year 2019 | Total | 20516.24 | Mean | 56.2 | Max | 5120 | Min | 0 | Inst Max | 17300 | Acre-Ft | 40690 |

# RUNOFF – DAILY DISCHARGE

Los Angeles County Dept of Public Works USDAY V115 Output 04/20/2021

Summary Report

Site: U8 San Gabriel River Below Morris Dam
USGS #:
Beginning Date: 10/01/2019
Ending Date: 09/30/2020

Daily Mean Discharge in Cubic feet/second Water Year Oct 2019 to Sep 2020

| Day | OCT | NOV | DEC | JAN | FEB | MAR | APR | MAY | JUN | JUL | AUG | SEP |
|---|---|---|---|---|---|---|---|---|---|---|---|---|
| 1 | 282 | 287 | 194 | 196 | 28.3 | 33.5 | 76.9 | 196 | 62.0 | 165 | 47.9 | 39.3 |
| 2 | 282 | 287 | 194 | 89.2 | 28.4 | 33.3 | 60.7 | 53.1 | 172 | 165 | 46.9 | 39.3 |
| 3 | 282 | 287 | 195 | 21.4 | 28.5 | 33.2 | 60.8 | 53.1 | 235 | 160 | 46.9 | 39.3 |
| 4 | 283 | 103 | 196 | 21.3 | 28.4 | 33.4 | 60.8 | 45.8 | 231 | 160 | 44.5 | 71.7 |
| 5 | 283 | 28.4 | 195 | 21.3 | 28.4 | 33.2 | 61.0 | 47.7 | 241 | 164 | 42.0 | 71.7 |
| 6 | 283 | 139 | 195 | 21.9 | 28.6 | 33.3 | 67.1 | 50.7 | 240 | 56.4 | 42.5 | 71.7 |
| 7 | 283 | 197 | 194 | 37.8 | 29.4 | 33.3 | 63.2 | 64.6 | 240 | 49.6 | 43.0 | 71.7 |
| 8 | 283 | 196 | 194 | 34.9 | 30.3 | 33.3 | 64.0 | 59.8 | 204 | 450 | 43.0 | 72.6 |
| 9 | 283 | 195 | 195 | 37.0 | 31.2 | 33.2 | 63.9 | 51.1 | 241 | 450 | 43.0 | 576 |
| 10 | 284 | 195 | 195 | 42.0 | 31.6 | 34.3 | 64.5 | 51.0 | 240 | 450 | 43.0 | 553 |
| 11 | 283 | 195 | 195 | 32.7 | 32.4 | 33.7 | 67.0 | 51.0 | 232 | 450 | 43.0 | 553 |
| 12 | 283 | 195 | 195 | 32.8 | 33.0 | 35.3 | 70.1 | 51.0 | 242 | 450 | 46.0 | 553 |
| 13 | 284 | 195 | 196 | 32.7 | 33.2 | 34.5 | 60.9 | 51.0 | 242 | 445 | 48.9 | 553 |
| 14 | 284 | 195 | 196 | 32.8 | 33.2 | 34.0 | 46.9 | 51.0 | 242 | 445 | 48.9 | 553 |
| 15 | 285 | 194 | 195 | 32.5 | 33.2 | 34.1 | 46.9 | 51.8 | 242 | 440 | 48.9 | 553 |
| 16 | 285 | 194 | 195 | 32.5 | 33.2 | 34.5 | 53.0 | 51.9 | 243 | 440 | 48.9 | 565 |
| 17 | 285 | 194 | 195 | 32.7 | 33.5 | 34.0 | 58.7 | 51.7 | 243 | 435 | 48.9 | 553 |
| 18 | 285 | 194 | 195 | 34.4 | 34.0 | 34.0 | 59.8 | 51.4 | 243 | 435 | 48.9 | 498 |
| 19 | 285 | 194 | 195 | 38.4 | 34.0 | 34.3 | 51.2 | 51.2 | 244 | 430 | 43.7 | 498 |
| 20 | 285 | 195 | 195 | 38.4 | 33.8 | 34.0 | 43.6 | 51.1 | 244 | 430 | 38.4 | 498 |
| 21 | 285 | 194 | 195 | 38.4 | 33.6 | 34.0 | 54.3 | 51.0 | 244 | 449 | 38.4 | 498 |
| 22 | 285 | 194 | 195 | 38.4 | 33.5 | 34.2 | 55.3 | 51.0 | 244 | 449 | 38.4 | 553 |
| 23 | 285 | 194 | 197 | 38.4 | 33.4 | 34.9 | 54.5 | 51.1 | 244 | 450 | 38.4 | 460 |
| 24 | 285 | 194 | 196 | 38.4 | 33.5 | 40.4 | 47.9 | 51.6 | 244 | 445 | 38.4 | 514 |
| 25 | 285 | 194 | 197 | 38.4 | 33.3 | 44.2 | 44.3 | 53.7 | 226 | 445 | 38.4 | 509 |
| 26 | 285 | 195 | 199 | 38.4 | 33.2 | 50.7 | 54.2 | 53.2 | 222 | 440 | 38.4 | 503 |
| 27 | 286 | 195 | 196 | 22.1 | 33.3 | 55.3 | 189 | 54.6 | 218 | 440 | 38.4 | 498 |
| 28 | 286 | 196 | 196 | 16.0 | 33.2 | 55.3 | 268 | 56.8 | 217 | 450 | 38.4 | 476 |
| 29 | 286 | 195 | 196 | 38.4 | 33.2 | 55.3 | 267 | 59.0 | 217 | 453 | 38.4 | 536 |
| 30 | 286 | 194 | 195 | 34.7 | ------ | 55.3 | 266 | 60.4 | 185 | 451 | 38.4 | 34.9 |
| 31 | 286 | ------ | 196 | 28.0 | ------ | 55.3 | ------ | 61.2 | ------ | 449 | 38.4 | ------ |
| Total | 8812 | 5804.4 | 6057 | 1232.3 | 926.8 | 1191.3 | 2501.5 | 1789.6 | 6784.0 | 11591.0 | 1329.6 | 11565.2 |
| Mean | 284 | 193 | 195 | 39.8 | 32.0 | 38.4 | 83.4 | 57.7 | 226 | 374 | 42.9 | 386 |
| Max | 286 | 287 | 199 | 196 | 34.0 | 55.3 | 268 | 196 | 244 | 453 | 48.9 | 576 |
| Min | 282 | 28.4 | 194 | 16.0 | 28.3 | 33.2 | 43.6 | 45.8 | 62.0 | 49.6 | 38.4 | 34.9 |
| Acre-Ft | 17480 | 11510 | 12010 | 2440 | 1840 | 2360 | 4960 | 3550 | 13460 | 22990 | 2640 | 22940 |

| | | | | | | | | | | | | |
|---|---|---|---|---|---|---|---|---|---|---|---|---|
| Wtr Year 2020 | Total | 59584.7 | Mean | 163 | Max | 576 | Min | 16.0 | Inst Max | 879 | Acre-Ft | 118200 |
| Cal Year 2019 | Total | 117291.42 | Mean | 321 | Max | 917 | Min | 0 | Inst Max | 982 | Acre-Ft | 232600 |

# RUNOFF – DAILY DISCHARGE

Los Angeles County Dept of Public Works USDAY V115 Output 08/05/2021

Summary Report

Site: F251 San Gabriel River - West Fork at Toe of Cogswell Dam
USGS #:
Beginning Date: 10/01/2019
Ending Date: 09/30/2020

Daily Mean Discharge in Cubic feet/second Water Year Oct 2019 to Sep 2020

| Day | OCT | NOV | DEC | JAN | FEB | MAR | APR | MAY | JUN | JUL | AUG | SEP |
|---|---|---|---|---|---|---|---|---|---|---|---|---|
| 1 | 11.8 | 5.10 | 3.48 | 4.32 | 28.1 | 15.0 | 16.3 | 21.3 | 8.86 | 8.20F | 8.35 | 7.98 |
| 2 | 11.5 | 5.03 | 3.48 | 4.32 | 28.1 | 15.0 | 16.5 | 21.3 | 8.88 | 8.07 | 8.41 | 7.98 |
| 3 | 11.2 | 5.03 | 3.48 | 4.32 | 28.1 | 15.0 | 16.6 | 21.3 | 8.84 | 8.06 | 8.41 | 7.98 |
| 4 | 11.1 | 5.03 | 3.51 | 4.48 | 28.1 | 15.0 | 16.6 | 21.3 | 8.84 | 8.20 | 8.41 | 7.98 |
| 5 | 11.1 | 5.03 | 3.48 | 4.49 | 28.1 | 15.0 | 16.6 | 21.3 | 8.84 | 8.20 | 8.38 | 7.98 |
| 6 | 11.1 | 5.03 | 3.48 | 4.49 | 28.1 | 15.0 | 17.4 | 21.3 | 8.75 | 8.20 | 8.39 | 7.45F |
| 7 | 11.0 | 4.86 | 3.64 | 4.49 | 28.1 | 15.0 | 18.1 | 21.3 | 8.62 | 8.20 | 8.40 | 6.95F |
| 8 | 10.7 | 4.85 | 3.65 | 4.49 | 22.2 | 15.0 | 18.9 | 21.3 | 8.62 | 8.20 | 8.41 | 6.95F |
| 9 | 10.6 | 4.84 | 3.64 | 4.49 | 14.5 | 15.0 | 19.7 | 21.3 | 8.59 | 8.20 | 8.41 | 6.95F |
| 10 | 10.3 | 4.67 | 3.64 | 4.55 | 14.5 | 15.0 | 20.4 | 21.0 | 8.62 | 8.20 | 8.41 | 6.95F |
| 11 | 10.1 | 4.66 | 3.64 | 4.67 | 14.5 | 15.0 | 20.8 | 21.0 | 8.62F | 8.20 | 8.40 | 6.95F |
| 12 | 9.95 | 4.31 | 3.73 | 14.8 | 14.5 | 15.0 | 20.8 | 21.0 | 8.62 | 8.20 | 8.37 | 6.95F |
| 13 | 9.82 | 3.89 | 3.81 | 27.8 | 14.5 | 15.0 | 21.0 | 13.3 | 8.62 | 8.29 | 8.37 | 6.95F |
| 14 | 9.60 | 3.81 | 3.81 | 27.8 | 14.5 | 15.0 | 21.0 | 9.04 | 8.62 | 8.62 | 8.28 | 6.95F |
| 15 | 9.39 | 3.81 | 3.81 | 27.8 | 14.5 | 15.0 | 21.0 | 9.06 | 8.62 | 8.62 | 8.20 | 6.95F |
| 16 | 9.00 | 3.81 | 3.81 | 27.8 | 14.5 | 15.1 | 21.0 | 8.96 | 8.62 | 8.62 | 8.20 | 6.95F |
| 17 | 8.69 | 3.81 | 3.81 | 27.8 | 14.5 | 15.5 | 21.0 | 9.03 | 8.62 | 8.58 | 8.20 | 6.95F |
| 18 | 8.25 | 3.81 | 3.81 | 27.8 | 14.5 | 15.6 | 21.0 | 9.07 | 8.62 | 8.67 | 8.20 | 6.95F |
| 19 | 7.95 | 3.75 | 3.81 | 27.8 | 14.5 | 15.6 | 21.4 | 9.06 | 8.53 | 8.63 | 8.20 | 6.95F |
| 20 | 7.55 | 3.66 | 3.81 | 27.8 | 14.5 | 15.7 | 21.6 | 9.06 | 8.42 | 8.53 | 8.20 | 6.95F |
| 21 | 6.79 | 3.64 | 3.81 | 27.8 | 14.5 | 15.8 | 21.6 | 9.06 | 8.41 | 8.40 | 8.20 | 6.95F |
| 22 | 6.66 | 3.64 | 3.81 | 27.8 | 14.5 | 15.8 | 21.2 | 9.06 | 8.29 | 8.31 | 8.20 | 6.95F |
| 23 | 6.41 | 3.64 | 3.83 | 27.8 | 14.5 | 15.8 | 21.0 | 9.06 | 8.28 | 8.27 | 8.20 | 6.95F |
| 24 | 6.33 | 3.64 | 3.81 | 27.8 | 14.7 | 16.0 | 21.1 | 9.06 | 8.41 | 8.20 | 8.20 | 6.95F |
| 25 | 6.16 | 3.64 | 3.84 | 27.8 | 14.6 | 16.1 | 21.0 | 9.06 | 8.41 | 8.20 | 8.20 | 6.95F |
| 26 | 5.97 | 3.64 | 4.12 | 27.9 | 14.5 | 16.1 | 21.0 | 8.93 | 8.29F | 8.20 | 8.20 | 6.95F |
| 27 | 5.92 | 3.64 | 4.14 | 28.1 | 14.8 | 16.1 | 21.0 | 8.84 | 8.20 | 8.16 | 8.20 | 6.95F |
| 28 | 5.77 | 3.64 | 4.14 | 28.1 | 14.8 | 16.1 | 21.0 | 8.84 | 8.20 | 8.19 | 8.20 | 6.95F |
| 29 | 5.73 | 3.64 | 4.14 | 28.1 | 14.8 | 16.1 | 21.0 | 8.84 | 8.07 | 8.20 | 8.20 | 6.95F |
| 30 | 5.53 | 3.58 | 4.15 | 28.1 | ------ | 16.3 | 21.1 | 8.84 | 8.06 | 8.20 | 8.16 | 6.95F |
| 31 | 5.23 | ------ | 4.19 | 28.1 | ------ | 16.3 | ------ | 8.84 | ------ | 8.20 | 8.08 | ------ |
| Total | 267.20 | 125.13 | 117.31 | 593.71 | 524.6 | 479.0 | 598.7 | 429.71 | 255.99 | 257.22 | 256.64 | 214.15 |
| Mean | 8.62 | 4.17 | 3.78 | 19.2 | 18.1 | 15.5 | 20.0 | 13.9 | 8.53 | 8.30 | 8.28 | 7.14 |
| Max | 11.8 | 5.10 | 4.19 | 28.1 | 28.1 | 16.3 | 21.6 | 21.3 | 8.88 | 8.67 | 8.41 | 7.98 |
| Min | 5.23 | 3.58 | 3.48 | 4.32 | 14.5 | 15.0 | 16.3 | 8.84 | 8.06 | 8.06 | 8.08 | 6.95 |
| Acre-Ft | 530 | 248 | 233 | 1180 | 1040 | 950 | 1190 | 852 | 508 | 510 | 509 | 425 |

| | | | | | | | | | | | | |
|---|---|---|---|---|---|---|---|---|---|---|---|---|
| Wtr Year 2020 | Total | 4119.36 | Mean | 11.3 | Max | 28.1 | Min | 3.48 | Inst Max | 28.1 | Acre-Ft | 8170 |
| Cal Year 2019 | Total | 3635.18 | Mean | 9.96 | Max | 15.8 | Min | 0 | Inst Max | 16.1 | Acre-Ft | 7210 |

F : Indicates estimated Flow.

# RUNOFF – DAILY DISCHARGE

Los Angeles County Dept of Public Works USDAY V115 Output 04/20/2021

Summary Report

Site: F312B San Jose Channel Above Workman Mill Road
USGS #:
Beginning Date: 10/01/2019
Ending Date: 09/30/2020

Daily Mean Discharge in Cubic feet/second Water Year Oct 2019 to Sep 2020

| Day | OCT | NOV | DEC | JAN | FEB | MAR | APR | MAY | JUN | JUL | AUG | SEP |
|---|---|---|---|---|---|---|---|---|---|---|---|---|
| 1 | 7.43 | 6.18 | 7.83 | 7.53 | 9.83 | 22.8 | 15.0 | 9.30 | 2.15 | .69 | .49 | .76 |
| 2 | 8.58 | 8.40 | 8.00 | 8.06 | 10.9 | 26.8 | 16.2 | 9.51 | 1.02 | 2.44 | 1.73 | .16 |
| 3 | 7.87 | 7.18 | 9.15 | 8.31 | 12.9 | 18.8 | 15.6 | 9.42 | .37 | 3.35 | 1.29 | .84 |
| 4 | 6.61 | 6.12 | 539 | 7.27 | 8.58 | 18.7 | 18.3 | 9.24 | 1.35 | 5.22 | .72 | 1.38 |
| 5 | 7.19 | 5.99 | 14.9 | 8.62 | 8.70 | 21.4 | 21.2 | 8.01 | 1.65 | 2.28 | .39 | .15 |
| 6 | 8.84 | 5.12 | 26.0 | 7.73 | 10.5 | 23.0 | 788 | 7.51 | 4.20 | 3.27 | .35 | 1.85 |
| 7 | 8.18 | 6.25 | 34.6 | 7.20 | 12.8 | 25.2 | 276 | 7.94 | 2.28 | 2.56 | .47 | 1.33 |
| 8 | 5.83 | 7.12 | 63.2 | 7.42 | 12.7 | 29.2 | 160 | 7.52 | 1.58 | 1.81 | .22 | 1.65 |
| 9 | 6.55 | 8.19 | 9.62 | 7.55 | 14.5 | 28.1 | 481 | 6.63 | .74 | .79 | .93 | .87 |
| 10 | 7.60 | 8.59 | 8.83 | 7.89 | 11.2 | 266 | 202 | 8.51 | .28 | 1.01 | 1.91 | .91 |
| 11 | 7.01 | 8.86 | 7.83 | 8.65 | 11.3 | 23.1 | 24.8 | 7.44 | .05 | 1.11 | .33 | 2.79 |
| 12 | 7.62 | 8.29 | 7.59 | 8.73 | 14.9 | 726 | 19.6 | 5.90 | 1.36 | 1.58 | .08 | 3.18 |
| 13 | 9.16 | 9.03 | 8.38 | 8.53 | 16.0 | 352 | 28.7 | 5.21 | 1.43 | 3.89 | .34 | 3.11 |
| 14 | 9.39 | 11.2 | 8.66 | 7.77 | 13.4 | 17.5 | 19.0 | 5.30 | 2.33 | .90 | .28 | 2.88 |
| 15 | 7.62 | 10.0 | 8.25 | 8.48 | 17.0 | 49.1 | 15.3 | 7.17 | 1.77 | .84 | .08 | 2.51 |
| 16 | 7.55 | 7.52 | 7.82 | 9.56 | 20.9 | 221 | 9.56 | 7.70 | .92 | 1.00 | 1.69 | 1.84 |
| 17 | 7.79 | 8.47 | 7.41 | 62.0 | 20.1 | 33.5 | 9.60 | 7.18 | 1.08 | 2.07 | 2.26 | 1.64 |
| 18 | 7.42 | 7.00 | 6.90 | 8.48 | 15.8 | 13.1 | 9.39 | 65.1 | .92 | 1.60 | 1.07 | 2.09 |
| 19 | 8.76 | 5.85 | 7.28 | 8.21 | 24.0 | 278 | 10.5 | 5.12 | 1.31 | 2.90 | 1.09 | .85 |
| 20 | 9.95 | 159 | 6.92 | 8.92 | 21.5 | 36.7 | 10.0 | 4.91 | 1.61 | 3.60 | .51 | 3.05 |
| 21 | 7.79 | 8.72 | 7.20 | 8.72 | 22.0 | 13.6 | 9.40 | 4.19 | 2.20 | 1.35 | .52 | 3.31 |
| 22 | 5.98 | 8.07 | 8.02 | 8.36 | 43.6 | 246 | 10.5 | 5.42 | 1.83 | 2.26 | .29 | 2.08 |
| 23 | 6.86 | 7.32 | 405 | 9.68 | 32.6 | 163 | 9.51 | 5.06 | .92 | 2.54 | .38 | .76 |
| 24 | 7.19 | 8.23 | 13.7 | 9.83 | 26.2 | 14.2 | 8.83 | 5.18 | .89 | 1.99 | 2.23 | 2.61 |
| 25 | 6.86 | 8.41 | 69.9 | 10.5 | 21.3 | 16.2 | 9.53 | 5.09 | 1.50 | .92 | 1.47 | 2.28 |
| 26 | 7.74 | 6.80 | 1010 | 10.2 | 17.9 | 13.2 | 10.1 | 2.93 | .64 | 3.09 | 0 | 1.83 |
| 27 | 8.87 | 181 | 18.4 | 11.5 | 18.6 | 14.5 | 8.74 | 2.41 | .86 | 2.63 | 0 | 3.58 |
| 28 | 8.37 | 696 | 9.19 | 9.87 | 16.9 | 14.2 | 7.22 | 2.05 | 1.35 | 1.10 | .24 | 2.76 |
| 29 | 7.98 | 59.3 | 8.84 | 9.90 | 21.5 | 16.6 | 9.08 | 1.21 | 2.16 | 1.17 | .02 | 1.68 |
| 30 | 6.78 | 13.7 | 8.49 | 10.7 | ------ | 16.4 | 9.11 | 2.35 | .65 | 1.07 | 2.29 | 1.72 |
| 31 | 6.64 | ------ | 8.43 | 8.98 | ------ | 15.4 | ------ | 2.63 | ------ | .43 | 2.57 | ------ |
| Total | 238.01 | 1301.91 | 2365.34 | 325.15 | 508.11 | 2773.3 | 2241.77 | 243.14 | 41.40 | 61.46 | 26.24 | 56.45 |
| Mean | 7.68 | 43.4 | 76.3 | 10.5 | 17.5 | 89.5 | 74.7 | 7.84 | 1.38 | 1.98 | .85 | 1.88 |
| Max | 9.95 | 696 | 1010 | 62.0 | 43.6 | 726 | 788 | 65.1 | 4.20 | 5.22 | 2.57 | 3.58 |
| Min | 5.83 | 5.12 | 6.90 | 7.20 | 8.58 | 13.1 | 7.22 | 1.21 | .05 | .43 | 0 | .15 |
| Acre-Ft | 472 | 2580 | 4690 | 645 | 1010 | 5500 | 4450 | 482 | 82 | 122 | 52 | 112 |

| | | | | | | | | | | | | |
|---|---|---|---|---|---|---|---|---|---|---|---|---|
| Wtr Year 2020 | Total | 10182.28 | Mean | 27.8 | Max | 1010 | Min | 0 | Inst Max | 4540 | Acre-Ft | 20200 |
| Cal Year 2019 | Total | 14932.48 | Mean | 40.9 | Max | 1830 | Min | 2.00 | Inst Max | 6430 | Acre-Ft | 29620 |

# RUNOFF – DAILY DISCHARGE

Los Angeles County Dept of Public Works USDAY V115 Output 04/20/2021

Summary Report

Site: F119C Santa Anita Creek Below Santa Anita Dam
USGS #:
Beginning Date: 10/01/2019
Ending Date: 09/30/2020

Daily Mean Discharge in Cubic feet/second Water Year Oct 2019 to Sep 2020

| Day | OCT | NOV | DEC | JAN | FEB | MAR | APR | MAY | JUN | JUL | AUG | SEP |
|---|---|---|---|---|---|---|---|---|---|---|---|---|
| 1 | 3.00 | 1.87 | 5.30 | 13.4 | 7.74 | .81 | 5.69 | 11.7 | 4.56 | 3.98 | .06 | .96 |
| 2 | 2.78 | .25 | 2.84 | 11.4 | 6.43 | 1.18 | 5.91 | 13.0 | 5.46 | 4.10 | .61 | .96 |
| 3 | 2.79 | .76 | .23 | 7.97 | 7.64 | 1.10 | 6.44 | 12.7 | 5.23 | 3.78 | .60 | .96 |
| 4 | 2.74 | 1.00 | 2.23 | 7.63 | 5.48 | .96 | 6.11 | 12.1 | 5.13 | 3.64 | .68 | .95 |
| 5 | 2.62 | 1.02 | 1.74 | 7.45 | 1.81 | .71 | 6.53 | 12.0 | 6.13 | 3.41 | .70 | .50 |
| 6 | 2.57 | 2.41 | 3.39 | 6.98 | 5.94 | 2.12 | 15.2 | 11.6 | 6.28 | 3.31 | .83 | .06 |
| 7 | 2.51 | 3.13 | 5.05 | 6.12 | 7.89 | 3.21 | 21.4 | 10.8 | 5.50 | 3.41 | .56 | .52 |
| 8 | 2.55 | 3.11 | 5.26 | 6.29 | 7.41 | 3.13 | 34.3 | 11.3 | 5.32 | 3.53 | .53 | 1.11 |
| 9 | 2.49 | 3.03 | 6.45 | 6.92 | 6.87 | 2.73 | 31.8 | 11.1 | 4.79 | 3.62 | .52 | .82 |
| 10 | 2.71 | 2.99 | 9.50 | 7.02 | 4.37 | 2.47 | 34.1 | 11.2 | 4.60 | 2.98 | .56 | 1.14 |
| 11 | 2.69 | 2.85 | 8.62 | 6.55 | 1.97 | 2.64 | 26.1 | 10.6 | 4.54 | 3.47 | .62 | .94 |
| 12 | 2.57 | 1.58 | 6.05 | 6.71 | 1.93 | 2.51 | 22.5 | 10.7 | 3.98 | 2.73 | 3.86 | .98 |
| 13 | 2.61 | .60 | 5.14 | 7.31 | 1.75 | 3.10 | 21.0 | 11.4 | 3.59 | 2.02 | 4.95 | .93 |
| 14 | 2.57 | .54 | 4.90 | 6.95 | 5.85 | 3.06 | 21.1 | 9.60 | 3.41 | 2.56 | 3.66 | .96 |
| 15 | 1.35 | .67 | 5.61 | 6.80 | 7.47 | 2.98 | 20.4 | 7.94 | 3.41 | 3.12 | 3.37 | .96 |
| 16 | 0 | .51 | 3.22 | 7.83 | 6.76 | 2.93 | 18.8 | 6.65 | 3.65 | 1.44 | 3.02 | .94 |
| 17 | .07 | .62 | .65 | 8.31 | 5.97 | 3.74 | 18.4 | 6.42 | 3.83 | 2.79 | 2.78 | .87 |
| 18 | 2.40 | 2.48 | 2.73 | 7.87 | 6.65 | 3.66 | 18.9 | 6.88 | 3.97 | 4.57 | 2.41 | .93 |
| 19 | 3.09 | 3.02 | 5.78 | 7.61 | 6.67 | 10.1 | 16.8 | 6.60 | 3.69 | 4.45 | 1.44 | .85 |
| 20 | 3.00 | 3.40 | 5.37 | 7.96 | 6.49 | 8.78 | 14.1 | 4.04 | 3.76 | 2.24 | 1.52 | .85 |
| 21 | 3.11 | 3.74 | 4.87 | 8.44 | 6.25 | 8.13 | 12.7 | 5.84 | 3.59 | .48 | 1.10 | .77 |
| 22 | 1.99 | 1.98 | 4.79 | 5.07 | 7.03 | 7.41 | 11.9 | 5.94 | 3.53 | .58 | .41 | .78 |
| 23 | 0 | .36 | 4.93 | 5.61 | 6.86 | 8.41 | 10.9 | 5.67 | 3.20 | .42 | .53 | .81 |
| 24 | 0 | .71 | 5.14 | 8.03 | 3.78 | 8.29 | 12.4 | 5.06 | 2.93 | .42 | .44 | .75 |
| 25 | .18 | 2.55 | 6.06 | 8.37 | 1.45 | 8.40 | 12.1 | 4.66 | 3.23 | .41 | .32 | .89 |
| 26 | .03 | 5.12 | 5.73 | 8.33 | 1.49 | 8.86 | 12.1 | 4.27 | 3.50 | .31 | .38 | .63 |
| 27 | .66 | 4.98 | 7.01 | 4.52 | 1.06 | 15.4 | 12.1 | 4.27 | 3.47 | .48 | .49 | .80 |
| 28 | .52 | 5.18 | 7.02 | .49 | 1.03 | 11.4 | 12.1 | 4.38 | 3.96 | .47 | .61 | .81 |
| 29 | 2.12 | 5.89 | 6.97 | 0 | .71 | 10.4 | 12.0 | 4.74 | 4.42 | .42 | .96 | .50 |
| 30 | 3.83 | 5.54 | 7.93 | 5.84 | ------ | 8.36 | 11.5 | 4.48 | 3.69 | .34 | .96 | 0 |
| 31 | 3.56 | ------ | 11.6 | 8.30 | ------ | 6.57 | ------ | 4.36 | ------ | 0 | .96 | ------ |
| Total | 63.11 | 71.89 | 162.11 | 218.08 | 142.75 | 163.55 | 485.38 | 252.00 | 126.35 | 69.48 | 40.44 | 23.93 |
| Mean | 2.04 | 2.40 | 5.23 | 7.03 | 4.92 | 5.28 | 16.2 | 8.13 | 4.21 | 2.24 | 1.30 | .80 |
| Max | 3.83 | 5.89 | 11.6 | 13.4 | 7.89 | 15.4 | 34.3 | 13.0 | 6.28 | 4.57 | 4.95 | 1.14 |
| Min | 0 | .25 | .23 | 0 | .71 | .71 | 5.69 | 4.04 | 2.93 | 0 | .06 | 0 |
| Acre-Ft | 125 | 143 | 322 | 433 | 283 | 324 | 963 | 500 | 251 | 138 | 80 | 47 |

| | | | | | | | | | | | | |
|---|---|---|---|---|---|---|---|---|---|---|---|---|
| Wtr Year 2020 | Total | 1819.07 | Mean | 4.97 | Max | 34.3 | Min | 0 | Inst Max | 40.2 | Acre-Ft | 3610 |
| Cal Year 2019 | Total | 3117.40 | Mean | 8.54 | Max | 120 | Min | 0 | Inst Max | 440 | Acre-Ft | 6180 |

# RUNOFF – DAILY DISCHARGE

Los Angeles County Dept of Public Works USDAY V115 Output 04/20/2021

Summary Report

Site: F260C Santa Anita Wash Below Foothill Boulevard
USGS #:
Beginning Date: 10/01/2019
Ending Date: 09/30/2020

Daily Mean Discharge in Cubic feet/second Water Year Oct 2019 to Sep 2020

| Day | OCT | NOV | DEC | JAN | FEB | MAR | APR | MAY | JUN | JUL | AUG | SEP |
|---|---|---|---|---|---|---|---|---|---|---|---|---|
| 1 | 0 | 0 | 0 | .02 | 0 | .23 | .08 | 0 | 0 | 0 | 0 | 0 |
| 2 | 0 | 0 | .03 | .05 | 0 | 0 | 0 | 0 | 0 | 0 | 0 | 0 |
| 3 | 0 | 0 | 0 | .02 | .11 | 0 | 0 | .01 | 0 | 0 | 0 | 0 |
| 4 | 0 | 0 | 6.35 | 0 | .33 | 0 | 0 | .08 | 0 | 0 | 0 | 0 |
| 5 | .01 | .01 | 0 | 0 | .22 | 0 | 1.32 | 0 | 0 | 0 | 0 | 0 |
| 6 | 0 | 0 | .01 | 0 | .09 | 0 | 19.4 | 0 | 0 | 0 | 0 | 0 |
| 7 | 0 | 0 | .71 | 0 | 0 | 0 | 3.46 | 0 | 0 | 0 | 0 | 0 |
| 8 | 0 | 0 | .81 | 0 | 0 | 0 | 5.48 | 0 | 0 | 0 | 0 | 0 |
| 9 | 0 | 0 | 0 | 0 | .92 | 0 | 6.00 | 0 | 0 | 0 | 0 | 0 |
| 10 | 0 | 0 | 0 | 0 | .17 | .63 | 5.92 | 0 | 0 | 0 | 0 | 0 |
| 11 | 0 | 0 | 0 | 0 | 0 | 0 | 4.24 | 0 | 0 | 0 | 0 | .07 |
| 12 | 0 | 0 | .03 | 0 | 0 | 4.12 | 4.47 | .08 | 0 | 0 | 0 | 0 |
| 13 | 0 | 0 | 0 | 0 | 0 | 3.30 | 3.27 | 0 | 0 | .02 | 0 | 0 |
| 14 | 0 | 0 | 0 | 0 | 0 | .15 | 1.90 | .03 | 0 | 0 | 0 | 0 |
| 15 | 0 | 0 | 0 | 0 | .01 | .22 | 2.09 | 0 | 0 | 0 | 0 | 0 |
| 16 | 0 | 0 | 0 | .11 | 0 | 4.93 | 2.13 | 0 | 0 | 0 | 0 | 0 |
| 17 | 0 | 0 | .05 | .38 | 0 | .18 | 2.09 | 0 | 0 | .22 | 0 | 0 |
| 18 | 0 | 0 | .07 | 0 | 0 | 0 | 2.07 | .46 | 0 | 0 | 0 | .04 |
| 19 | 0 | 0 | .07 | 0 | 0 | .95 | 2.01 | 0 | 0 | 0 | 0 | 0 |
| 20 | 0 | 1.14 | .01 | .23 | 0 | .04 | 1.71 | 0 | 0 | 0 | 0 | 0 |
| 21 | 0 | 0 | .06 | .27 | 0 | 0 | 1.41 | 0 | .02 | 0 | 0 | .10 |
| 22 | .01 | 0 | .08 | 0 | .13 | 1.46 | 1.22 | 0 | 0 | 0 | 0 | 0 |
| 23 | .04 | 0 | 3.88 | 0 | 0 | .43 | 1.22 | 0 | .07 | 0 | 0 | 0 |
| 24 | 0 | 0 | .02 | 0 | 0 | 0 | 1.12 | 0 | 0 | 0 | 0 | 0 |
| 25 | 0 | 0 | 1.26 | 0 | .04 | 0 | .64 | 0 | 0 | 0 | 0 | .04 |
| 26 | 0 | 0 | 9.47 | 0 | 0 | 0 | .15 | 0 | 0 | 0 | 0 | 0 |
| 27 | 0 | 2.27 | 0 | 0 | 0 | 0 | 0 | 0 | 0 | 0 | 0 | 0 |
| 28 | 0 | 7.19 | 0 | 0 | 0 | 0 | 0 | 0 | 0 | 0 | 0 | 0 |
| 29 | .01 | .10 | 0 | .05 | 0 | .99 | 0 | 0 | .10 | 0 | 0 | 0 |
| 30 | 0 | 0 | 0 | 0 | ------ | 1.20 | 0 | 0 | 0 | 0 | 0 | 0 |
| 31 | 0 | ------ | 0 | 0 | ------ | .45 | ------ | 0 | ------ | 0 | 0 | ------ |
| Total | 0.07 | 10.71 | 22.91 | 1.13 | 2.02 | 19.28 | 73.40 | 0.66 | 0.19 | 0.24 | 0 | 0.25 |
| Mean | .002 | .36 | .74 | .036 | .070 | .62 | 2.45 | .021 | .006 | .008 | 0 | .008 |
| Max | .04 | 7.19 | 9.47 | .38 | .92 | 4.93 | 19.4 | .46 | .10 | .22 | 0 | .10 |
| Min | 0 | 0 | 0 | 0 | 0 | 0 | 0 | 0 | 0 | 0 | 0 | 0 |
| Acre-Ft | .14 | 21 | 45 | 2.2 | 4.0 | 38 | 146 | 1.3 | .38 | .48 | 0 | .50 |

| | | | | | | | | | | | | |
|---|---|---|---|---|---|---|---|---|---|---|---|---|
| Wtr Year 2020 | Total | 130.86 | Mean | .36 | Max | 19.4 | Min | 0 | Inst Max | 422 | Acre-Ft | 260 |
| Cal Year 2019 | Total | 858.85 | Mean | 2.35 | Max | 106 | Min | 0 | Inst Max | 397 | Acre-Ft | 1700 |

# RUNOFF – DAILY DISCHARGE

Los Angeles County Dept of Public Works USDAY V115 Output 08/05/2021

Summary Report

Site: F92C Santa Clara River at Old Road Bridge
USGS #:
Beginning Date: 10/01/2019
Ending Date: 09/30/2020

Daily Mean Discharge in Cubic feet/second Water Year Oct 2019 to Sep 2020

| Day | OCT | NOV | DEC | JAN | FEB | MAR | APR | MAY | JUN | JUL | AUG | SEP |
|---|---|---|---|---|---|---|---|---|---|---|---|---|
| 1 | 3.00F | 2.64F | 6.67F | 5.63F | 5.17F | 2.21F | 6.67F | 2.75F | 3.00F | 3.00F | 3.00F | 2.56F |
| 2 | 3.00F | 2.61F | 5.00F | 5.50F | 5.08F | 2.14F | 7.50F | 2.67F | 3.00F | 3.00F | 3.00F | 2.50F |
| 3 | 3.00F | 2.57F | 5.00F | 5.38F | 5.00F | 2.07F | 8.33F | 2.58F | 3.00F | 3.00F | 3.00F | 2.50F |
| 4 | 3.00F | 2.54F | 30.0F | 5.25F | 4.88F | 2.00F | 9.17F | 2.50F | 3.00F | 3.00F | 3.00F | 2.50F |
| 5 | 3.00F | 2.50F | 230F | 5.13F | 4.75F | 2.73F | 10.0F | 2.52F | 3.00F | 3.00F | 3.00F | 2.50F |
| 6 | 3.00F | 2.68F | 10.0F | 5.00F | 4.63F | 3.46F | 440F | 2.55F | 3.00F | 3.00F | 3.00F | 2.50F |
| 7 | 3.00F | 2.86F | 9.67F | 5.46F | 4.50F | 4.18F | 260F | 2.57F | 3.00F | 3.00F | 3.00F | 2.50F |
| 8 | 3.00F | 3.04F | 9.33F | 5.91F | 4.38F | 4.91F | 55.0F | 2.60F | 3.00F | 3.00F | 3.00F | 2.50F |
| 9 | 3.00F | 3.21F | 9.00F | 6.36F | 4.25F | 5.64F | 230F | 2.62F | 3.00F | 3.00F | 3.00F | 2.50F |
| 10 | 3.00F | 3.39F | 8.67F | 6.82F | 4.13F | 6.36F | 100F | 2.64F | 3.00F | 3.00F | 3.00F | 2.50F |
| 11 | 3.00F | 3.57F | 8.33F | 7.27F | 4.00F | 7.09F | 10.0F | 2.67F | 3.00F | 3.00F | 3.00F | 2.50F |
| 12 | 3.00F | 3.75F | 8.00F | 7.73F | 3.88F | 7.82F | 6.00F | 2.69F | 3.00F | 3.00F | 3.00F | 2.50F |
| 13 | 3.00F | 3.93F | 7.67F | 8.18F | 3.75F | 8.55F | 5.81F | 2.71F | 3.00F | 3.00F | 3.00F | 2.50F |
| 14 | 3.00F | 4.11F | 7.33F | 8.64F | 3.63F | 9.27F | 5.63F | 2.74F | 3.00F | 3.00F | 3.00F | 2.50F |
| 15 | 3.00F | 4.29F | 7.00F | 9.09F | 3.50F | 10.0F | 5.44F | 2.76F | 3.00F | 3.00F | 3.00F | 2.50F |
| 16 | 3.00F | 4.46F | 6.67F | 9.55F | 3.38F | 270F | 5.25F | 2.79F | 3.00F | 3.00F | 3.00F | 2.50F |
| 17 | 3.00F | 4.64F | 6.33F | 10.0F | 3.25F | 20.0F | 5.06F | 2.81F | 3.00F | 3.00F | 3.00F | 2.50F |
| 18 | 3.00F | 4.82F | 6.00F | 9.20F | 3.13F | 17.5F | 4.88F | 2.83F | 3.00F | 3.00F | 3.00F | 2.50F |
| 19 | 3.00F | 5.00F | 5.67F | 8.40F | 3.00F | 15.0F | 4.69F | 2.86F | 3.00F | 3.00F | 3.00F | 2.50F |
| 20 | 3.00F | 10.0F | 5.33F | 7.60F | 2.93F | 12.5F | 4.50F | 2.88F | 3.00F | 3.00F | 3.00F | 2.50F |
| 21 | 3.00F | 5.00F | 5.00F | 6.80F | 2.86F | 10.0F | 4.31F | 2.91F | 3.00F | 3.00F | 3.00F | 2.50F |
| 22 | 3.00F | 5.00F | 30.0F | 6.00F | 2.79F | 120F | 4.13F | 2.93F | 3.00F | 3.00F | 3.00F | 2.50F |
| 23 | 2.96F | 5.00F | 90.0F | 5.92F | 2.71F | 55.0F | 3.94F | 2.95F | 3.00F | 3.00F | 3.00F | 2.50F |
| 24 | 2.93F | 5.00F | 15.0F | 5.83F | 2.64F | 10.0F | 3.75F | 2.98F | 3.00F | 3.00F | 3.00F | 2.50F |
| 25 | 2.89F | 5.00F | 240F | 5.75F | 2.57F | 9.17F | 3.56F | 3.00F | 3.00F | 3.00F | 2.94F | 2.50F |
| 26 | 2.86F | 5.00F | 500F | 5.67F | 2.50F | 8.33F | 3.38F | 3.00F | 3.00F | 3.00F | 2.89F | 2.50F |
| 27 | 2.82F | 70.0F | 10.0F | 5.58F | 2.43F | 7.50F | 3.19F | 3.00F | 3.00F | 3.00F | 2.83F | 2.50F |
| 28 | 2.79F | 250F | 8.00F | 5.50F | 2.36F | 6.67F | 3.00F | 3.00F | 3.00F | 3.00F | 2.78F | 2.50F |
| 29 | 2.75F | 10.0F | 6.00F | 5.42F | 2.29F | 5.83F | 2.92F | 3.00F | 3.00F | 3.00F | 2.72F | 2.50F |
| 30 | 2.71F | 8.33F | 5.88F | 5.33F | ------ | 5.00F | 2.83F | 3.00F | 3.00F | 3.00F | 2.67F | 2.50F |
| 31 | 2.68F | ------ | 5.75F | 5.25F | ------ | 5.83F | ------ | 3.00F | ------ | 3.00F | 2.61F | ------ |
| Total | 91.39 | 444.94 | 1307.30 | 205.15 | 104.37 | 656.76 | 1218.94 | 86.51 | 90.00 | 93.00 | 91.44 | 75.06 |
| Mean | 2.95 | 14.8 | 42.2 | 6.62 | 3.60 | 21.2 | 40.6 | 2.79 | 3.00 | 3.00 | 2.95 | 2.50 |
| Max | 3.00 | 250 | 500 | 10.0 | 5.17 | 270 | 440 | 3.00 | 3.00 | 3.00 | 3.00 | 2.56 |
| Min | 2.68 | 2.50 | 5.00 | 5.00 | 2.29 | 2.00 | 2.83 | 2.50 | 3.00 | 3.00 | 2.61 | 2.50 |
| Acre-Ft | 181 | 883 | 2590 | 407 | 207 | 1300 | 2420 | 172 | 179 | 184 | 181 | 149 |

| | | | | | | | | | | | | |
|---|---|---|---|---|---|---|---|---|---|---|---|---|
| Wtr Year 2020 | Total | 4464.86 | Mean | 12.2 | Max | 500 | Min | 2.00 | Inst Max | 500 | Acre-Ft | 8860 |
| Cal Year 2019 | Total | 8544.36 | Mean | 23.4 | Max | 960 | Min | .30 | Inst Max | 960 | Acre-Ft | 16950 |

F : Indicates estimated Flow.

# RUNOFF – DAILY DISCHARGE

Los Angeles County Dept of Public Works USDAY V115 Output 04/20/2021

Summary Report

Site: F193B Santa Anita Wash at Longden Avenue
USGS #:
Beginning Date: 10/01/2019
Ending Date: 09/30/2020

Daily Mean Discharge in Cubic feet/second Water Year Oct 2019 to Sep 2020

| Day | OCT | NOV | DEC | JAN | FEB | MAR | APR | MAY | JUN | JUL | AUG | SEP |
|---|---|---|---|---|---|---|---|---|---|---|---|---|
| 1 | .25 | .06 | .29 | .27 | .26 | 2.22 | .76 | .50 | .23 | .10 | .35 | .31 |
| 2 | .25 | .08 | .29 | .29 | .28 | .23 | .50 | .52 | .43 | .08 | .17 | .08 |
| 3 | .25 | .09 | .25 | .32 | .25 | .22 | .50 | .50 | .38 | .13 | .29 | .07 |
| 4 | .22 | .08 | 30.5 | .25 | .27 | .29 | .50 | .85 | .50 | .31 | .19 | .14 |
| 5 | .12 | .22 | .34 | .25 | .25 | .30 | 7.47 | .52 | .42 | .13 | .23 | .12 |
| 6 | .13 | .25 | .31 | .25 | .46 | .25 | 64.6 | .50 | .89 | .18 | .13 | .29 |
| 7 | .15 | .25 | 2.68 | .25 | .25 | .25 | 15.6 | .50 | .16 | 1.13 | .15 | .06 |
| 8 | .22 | .25 | 4.02 | .29 | .25 | .25 | 24.8 | .50 | .02 | .84 | .10 | .26 |
| 9 | .25 | .16 | .25 | .25 | 4.38 | .25 | 35.2 | .63 | .25 | .60 | .12 | .29 |
| 10 | .20 | .24 | .25 | .25 | .91 | 5.08 | 30.2 | .58 | 0 | .19 | .36 | .13 |
| 11 | .02 | .25 | .25 | .25 | .27 | .50 | 24.5 | .50 | .03 | .13 | .29 | 1.46 |
| 12 | .20 | .33 | .29 | .25 | .25 | 59.8 | 25.1 | .43 | 0 | .18 | .19 | .42 |
| 13 | .25 | .25 | .25 | .25 | .35 | 66.0 | 17.1 | .25 | 0 | .16 | .31 | .60 |
| 14 | .28 | .25 | .28 | .25 | .27 | 3.58 | 6.94 | .40 | .04 | .23 | .21 | .18 |
| 15 | .21 | .29 | .27 | .25 | .38 | 6.06 | 9.77 | .25 | .20 | .13 | .33 | .20 |
| 16 | .25 | .25 | .25 | .47 | .30 | 23.8 | 10.8 | .29 | .29 | .54 | .20 | .50 |
| 17 | .25 | .13 | .39 | 2.42 | .25 | 1.02 | 5.63 | .27 | .20 | 1.91 | .19 | .24 |
| 18 | .25 | .01 | .38 | .25 | .36 | .50 | 5.61 | 4.55 | .13 | .86 | .24 | 1.18 |
| 19 | .25 | .21 | .35 | .27 | .25 | 5.82 | 5.01 | .25 | .06 | .46 | .58 | .34 |
| 20 | .25 | 8.92 | .33 | .44 | .25 | .86 | 3.30 | .11 | .04 | .38 | .15 | .26 |
| 21 | .25 | .27 | .38 | .75 | .25 | .50 | 2.41 | .71 | .11 | .31 | .15 | 1.80 |
| 22 | .46 | .25 | .34 | .29 | 2.62 | 12.2 | 2.45 | .26 | 0 | .24 | .10 | .38 |
| 23 | .64 | .25 | 26.5 | .25 | .29 | 5.77 | 2.52 | .72 | .19 | .12 | .17 | .32 |
| 24 | .25 | .25 | .30 | .25 | .30 | .52 | 2.37 | .75 | .02 | .21 | .12 | .20 |
| 25 | .06 | .25 | 6.84 | .25 | .31 | .57 | 1.69 | .68 | .03 | .13 | .16 | .87 |
| 26 | .07 | .30 | 40.5 | .25 | .25 | .50 | .98 | .54 | .09 | .23 | .20 | .24 |
| 27 | .21 | 14.0 | .29 | .25 | .25 | .50 | .65 | .39 | .01 | .58 | .22 | .26 |
| 28 | .16 | 32.2 | .25 | .25 | .25 | .50 | .60 | .65 | 1.35 | .16 | .40 | .18 |
| 29 | .14 | 1.46 | .25 | .35 | .25 | 2.42 | .53 | .30 | .67 | .23 | .19 | .73 |
| 30 | .19 | .25 | .25 | .25 | ------ | 2.86 | .57 | 1.03 | .06 | .20 | .27 | .48 |
| 31 | .09 | ------ | .25 | .25 | ------ | 1.52 | ------ | .32 | ------ | .25 | .22 | ------ |
| Total | 6.77 | 62.05 | 118.37 | 11.16 | 15.26 | 205.14 | 308.66 | 19.25 | 6.80 | 11.33 | 6.98 | 12.59 |
| Mean | .22 | 2.07 | 3.82 | .36 | .53 | 6.62 | 10.3 | .62 | .23 | .37 | .23 | .42 |
| Max | .64 | 32.2 | 40.5 | 2.42 | 4.38 | 66.0 | 64.6 | 4.55 | 1.35 | 1.91 | .58 | 1.80 |
| Min | .02 | .01 | .25 | .25 | .25 | .22 | .50 | .11 | 0 | .08 | .10 | .06 |
| Acre-Ft | 13 | 123 | 235 | 22 | 30 | 407 | 612 | 38 | 13 | 22 | 14 | 25 |

| | | | | | | | | | | | | |
|---|---|---|---|---|---|---|---|---|---|---|---|---|
| Wtr Year 2020 | Total | 784.36 | Mean | 2.14 | Max | 66.0 | Min | 0 | Inst Max | 1030 | Acre-Ft | 1560 |
| Cal Year 2019 | Total | 2725.09 | Mean | 7.47 | Max | 211 | Min | 0 | Inst Max | 790 | Acre-Ft | 5410 |

# RUNOFF – DAILY DISCHARGE

Los Angeles County Dept of Public Works USDAY V115 Output 04/20/2021

Summary Report

Site: F93C Santa Clara River at Capra Road Railroad Crossing
USGS #:
Beginning Date: 10/01/2019
Ending Date: 09/30/2020

Daily Mean Discharge in Cubic feet/second Water Year Oct 2019 to Sep 2020

| Day | OCT | NOV | DEC | JAN | FEB | MAR | APR | MAY | JUN | JUL | AUG | SEP |
|---|---|---|---|---|---|---|---|---|---|---|---|---|
| 1 | 0 | 0 | 0 | 0 | 0 | 0 | 4.02 | 3.90 | .80 | 0 | 0 | 0 |
| 2 | 0 | 0 | 0 | 0 | 0 | 0 | 2.76 | 3.14 | .77 | 0 | 0 | 0 |
| 3 | 0 | 0 | 0 | 0 | 0 | 0 | 1.87 | 3.22 | .56 | 0 | 0 | 0 |
| 4 | 0 | 0 | .12 | 0 | 0 | 0 | 1.64 | 3.38 | .28 | 0 | 0 | 0 |
| 5 | 0 | 0 | 0 | 0 | 0 | 0 | 1.87 | 3.05 | .32 | 0 | 0 | 0 |
| 6 | 0 | 0 | 0 | 0 | 0 | 0 | 22.7 | 2.62 | .28 | 0 | 0 | 0 |
| 7 | 0 | 0 | 0 | 0 | 0 | 0 | 43.1 | 2.43 | .38 | 0 | 0 | 0 |
| 8 | 0 | 0 | 0 | 0 | 0 | 0 | 42.9 | 2.72 | .36 | 0 | 0 | 0 |
| 9 | 0 | 0 | 0 | 0 | 0 | 0 | 42.9 | 2.47 | .35 | 0 | 0 | 0 |
| 10 | 0 | 0 | 0 | 0 | 0 | 0 | 40.4 | 3.41 | .26 | 0 | 0 | 0 |
| 11 | 0 | 0 | 0 | 0 | 0 | 0 | 28.6 | 2.76 | .11 | 0 | 0 | 0 |
| 12 | 0 | 0 | 0 | 0 | .07 | .97 | 20.9 | 2.40 | 0 | 0 | 0 | 0 |
| 13 | 0 | 0 | 0 | 0 | .23 | 5.39 | 18.3 | 2.32 | 0 | 0 | 0 | 0 |
| 14 | 0 | 0 | 0 | 0 | .40 | 3.84 | 15.7 | 1.74 | 0 | 0 | 0 | 0 |
| 15 | 0 | 0 | 0 | 0 | .24 | 3.79 | 13.3 | 1.24 | 0 | 0 | 0 | 0 |
| 16 | 0 | 0 | 0 | 0 | .10 | 4.50 | 10.2 | .78 | 0 | 0 | 0 | 0 |
| 17 | 0 | 0 | 0 | 0 | 0 | 6.48 | 7.98 | 1.57 | 0 | 0 | 0 | 0 |
| 18 | 0 | 0 | 0 | 0 | .12 | 4.01 | 7.77 | 1.96 | 0 | 0 | 0 | 0 |
| 19 | 0 | 0 | 0 | 0 | .01 | 4.63 | 8.88 | 1.20 | 0 | 0 | 0 | 0 |
| 20 | 0 | 0 | 0 | 0 | .01 | 2.69 | 7.95 | 1.07 | 0 | 0 | 0 | 0 |
| 21 | 0 | 0 | 0 | 0 | .01 | 2.25 | 5.66 | .64 | 0 | 0 | 0 | 0 |
| 22 | 0 | 0 | 0 | 0 | 0 | 1.66 | 5.01 | .98 | 0 | 0 | 0 | 0 |
| 23 | 0 | 0 | 0 | 0 | 0 | 5.40 | 4.40 | .86 | 0 | 0 | 0 | 0 |
| 24 | 0 | 0 | 0 | 0 | 0 | 4.09 | 7.15 | .96 | 0 | 0 | 0 | 0 |
| 25 | 0 | 0 | 0 | 0 | .01 | 4.98 | 5.93 | .83 | 0 | 0 | 0 | 0 |
| 26 | 0 | 0 | 6.30 | 0 | 0 | 8.57 | 5.05 | 1.14 | 0 | 0 | 0 | 0 |
| 27 | 0 | .01 | .16 | 0 | 0 | 7.36 | 5.08 | .91 | 0 | 0 | 0 | 0 |
| 28 | 0 | .17 | 0 | 0 | .07 | 5.52 | 5.21 | .93 | 0 | 0 | 0 | 0 |
| 29 | 0 | .06 | 0 | 0 | 0 | 5.71 | 5.16 | .86 | 0 | 0 | 0 | 0 |
| 30 | 0 | 0 | 0 | 0 | ------ | 5.72 | 5.40 | .91 | 0 | 0 | 0 | 0 |
| 31 | 0 | ------ | 0 | 0 | ------ | 7.75 | ------ | .59 | ------ | 0 | 0 | ------ |
| Total | 0 | 0.24 | 6.58 | 0 | 1.27 | 95.31 | 397.79 | 56.99 | 4.47 | 0 | 0 | 0 |
| Mean | 0 | .008 | .21 | 0 | .044 | 3.07 | 13.3 | 1.84 | .15 | 0 | 0 | 0 |
| Max | 0 | .17 | 6.30 | 0 | .40 | 8.57 | 43.1 | 3.90 | .80 | 0 | 0 | 0 |
| Min | 0 | 0 | 0 | 0 | 0 | 0 | 1.64 | .59 | 0 | 0 | 0 | 0 |
| Acre-Ft | 0 | .48 | 13 | 0 | 2.5 | 189 | 789 | 113 | 8.9 | 0 | 0 | 0 |

| | | | | | | | | | | | | |
|---|---|---|---|---|---|---|---|---|---|---|---|---|
| Wtr Year 2020 | Total | 562.65 | Mean | 1.54 | Max | 43.1 | Min | 0 | Inst Max | 46.4 | Acre-Ft | 1120 |
| Cal Year 2019 | Total | 1570.76 | Mean | 4.30 | Max | 79.3 | Min | 0 | Inst Max | 83.4 | Acre-Ft | 3120 |

# RUNOFF – DAILY DISCHARGE

Los Angeles County Dept of Public Works USDAY V115 Output 04/20/2021

Summary Report

Site: F280 Santa Fe Channel Below Santa Fe Dam
USGS #:
Beginning Date: 10/01/2019
Ending Date: 09/30/2020

Daily Mean Discharge in Cubic feet/second Water Year Oct 2019 to Sep 2020

| Day | OCT | NOV | DEC | JAN | FEB | MAR | APR | MAY | JUN | JUL | AUG | SEP |
|---|---|---|---|---|---|---|---|---|---|---|---|---|
| 1 | 31.6 | 18.7 | 0 | 0 | 0 | 0 | 0 | 0 | 0 | 0 | .74 | 0 |
| 2 | 41.3 | 19.0 | 0 | 0 | 0 | 0 | 0 | 0 | 0 | .16 | .04 | 0 |
| 3 | 41.3 | 18.8 | 0 | 0 | 0 | 0 | 0 | 0 | 0 | .01 | 0 | 0 |
| 4 | 42.0 | 9.85 | 0 | 0 | 0 | 0 | 0 | 0 | 0 | .01 | 0 | 0 |
| 5 | 42.3 | 0 | 0 | 0 | 0 | 0 | 0 | 0 | 0 | .01 | 0 | 0 |
| 6 | 42.8 | 0 | 0 | 0 | 0 | 0 | 0 | 0 | 0 | .01 | 0 | 0 |
| 7 | 43.5 | 0 | 0 | 0 | 0 | 0 | 0 | 0 | 0 | 85.1 | 0 | 0 |
| 8 | 44.0 | 0 | 0 | 0 | 0 | 0 | 0 | 0 | 0 | 254 | 0 | 100 |
| 9 | 46.4 | 0 | 0 | 0 | 0 | 0 | 0 | 0 | 0 | 255 | 0 | 270 |
| 10 | 41.4 | 0 | 0 | 0 | 0 | 0 | 0 | 0 | 0 | 252 | 0 | 262 |
| 11 | 42.1 | 0 | 0 | 0 | 0 | 0 | 0 | 0 | 0 | 253 | 0 | 264 |
| 12 | 42.4 | 0 | 0 | 0 | 0 | 0 | 0 | 0 | 0 | 252 | 0 | 264 |
| 13 | 43.7 | 0 | 0 | 0 | 0 | 0 | 0 | 0 | 0 | 249 | 0 | 260 |
| 14 | 45.7 | 0 | 0 | 0 | 0 | 0 | 0 | 0 | 0 | 245 | 0 | 243 |
| 15 | 46.1 | 0 | 0 | 0 | 0 | 0 | 0 | 0 | 0 | 242 | 0 | 254 |
| 16 | 46.3 | 0 | 0 | 0 | 0 | 0 | 0 | 0 | 0 | 239 | 0 | 316 |
| 17 | 48.4 | 0 | 0 | 0 | 0 | 0 | 0 | 0 | 0 | 237 | 0 | 310 |
| 18 | 51.3 | 0 | 0 | 0 | 0 | 0 | 0 | 0 | 0 | 233 | 0 | 308 |
| 19 | 49.7 | 0 | 0 | 0 | 0 | 0 | 0 | 0 | 0 | 231 | 0 | 305 |
| 20 | 48.3 | 0 | 0 | 0 | 0 | 0 | 0 | 0 | 0 | 235 | 0 | 302 |
| 21 | 49.2 | 0 | 0 | 0 | 0 | 0 | 0 | 0 | 0 | 249 | 0 | 311 |
| 22 | 50.1 | 0 | 0 | 0 | 0 | 0 | 0 | 0 | 0 | 247 | 0 | 319 |
| 23 | 51.1 | 0 | 0 | 0 | 0 | 0 | 0 | 0 | 0 | 247 | 0 | 305 |
| 24 | 51.5 | 0 | 0 | 0 | 0 | 0 | 0 | 0 | 0 | 246 | 0 | 320 |
| 25 | 51.5 | 0 | 0 | 0 | 0 | 0 | 0 | 0 | 0 | 244 | 0 | 319 |
| 26 | 51.8 | 0 | 0 | 0 | 0 | 0 | 0 | 0 | 0 | 244 | 0 | 318 |
| 27 | 52.5 | 0 | 0 | 0 | 0 | 0 | 0 | 0 | 0 | 247 | 0 | 317 |
| 28 | 52.9 | 0 | 0 | 0 | 0 | 0 | 0 | 0 | 0 | 256 | 0 | 326 |
| 29 | 53.6 | 0 | 0 | 0 | 0 | 0 | 0 | 0 | 0 | 255 | 0 | 224 |
| 30 | 54.4 | 0 | 0 | 0 | ------ | 0 | 0 | 0 | 0 | 254 | 0 | 4.28 |
| 31 | 55.5 | ------ | 0 | 0 | ------ | 0 | ------ | 0 | ------ | 157 | 0 | ------ |
| Total | 1454.7 | 66.35 | 0 | 0 | 0 | 0 | 0 | 0 | 0 | 5908.30 | 0.78 | 6221.28 |
| Mean | 46.9 | 2.21 | 0 | 0 | 0 | 0 | 0 | 0 | 0 | 191 | .025 | 207 |
| Max | 55.5 | 19.0 | 0 | 0 | 0 | 0 | 0 | 0 | 0 | 256 | .74 | 326 |
| Min | 31.6 | 0 | 0 | 0 | 0 | 0 | 0 | 0 | 0 | 0 | 0 | 0 |
| Acre-Ft | 2890 | 132 | 0 | 0 | 0 | 0 | 0 | 0 | 0 | 11720 | 1.5 | 12340 |

| | | | | | | | | | | | | |
|---|---|---|---|---|---|---|---|---|---|---|---|---|
| Wtr Year 2020 | Total | 13651.41 | Mean | 37.3 | Max | 326 | Min | 0 | Inst Max | 358 | Acre-Ft | 27080 |
| Cal Year 2019 | Total | 15677.15 | Mean | 43.0 | Max | 312 | Min | 0 | Inst Max | 417 | Acre-Ft | 31100 |

# RUNOFF – DAILY DISCHARGE

Los Angeles County Dept of Public Works USDAY V115 Output 04/20/2021

Summary Report

Site: F125 Santiago Canyon Creek Above Littlerock Creek
USGS #:
Beginning Date: 10/01/2019
Ending Date: 09/30/2020

Daily Mean Discharge in Cubic feet/second Water Year Oct 2019 to Sep 2020

| Day | OCT | NOV | DEC | JAN | FEB | MAR | APR | MAY | JUN | JUL | AUG | SEP |
|---|---|---|---|---|---|---|---|---|---|---|---|---|
| 1 | 0 | 0 | 0 | 0 | .33 | .22 | 4.42 | .69 | 0 | 0 | 0 | 0 |
| 2 | 0 | 0 | 0 | 0 | .34 | .22 | 3.85 | .69 | 0 | 0 | 0 | 0 |
| 3 | 0 | 0 | 0 | 0 | .32 | .22 | 3.39 | .69 | 0 | 0 | 0 | 0 |
| 4 | 0 | 0 | 0 | 0 | .27 | .20 | 2.46 | .69 | 0 | 0 | 0 | 0 |
| 5 | 0 | 0 | 0 | 0 | .26 | .20 | 2.46 | .70 | 0 | 0 | 0 | 0 |
| 6 | 0 | 0 | 0 | 0 | .26 | .23 | 8.85 | .78 | 0 | 0 | 0 | 0 |
| 7 | 0 | 0 | 0 | 0 | .23 | .23 | 4.00 | .72 | 0 | 0 | 0 | 0 |
| 8 | 0 | 0 | 0 | 0 | .22 | .22 | 10.0 | .69 | 0 | 0 | 0 | 0 |
| 9 | 0 | 0 | 0 | 0 | .21 | .21 | 5.58 | .64 | 0 | 0 | 0 | 0 |
| 10 | 0 | 0 | 0 | 0 | .18 | .28 | 15.6 | .42 | 0 | 0 | 0 | 0 |
| 11 | 0 | 0 | 0 | 0 | .16 | .29 | 20.9 | .41 | 0 | 0 | 0 | 0 |
| 12 | 0 | 0 | 0 | 0 | .18 | 2.64 | 14.5 | .69 | 0 | 0 | 0 | 0 |
| 13 | 0 | 0 | 0 | 0 | .19 | 16.6 | 11.8 | .77 | 0 | 0 | 0 | 0 |
| 14 | 0 | 0 | 0 | 0 | .20 | 4.50 | 9.69 | .68 | 0 | 0 | 0 | 0 |
| 15 | 0 | 0 | 0 | 0 | .19 | .91 | 6.08 | .55 | 0 | 0 | 0 | 0 |
| 16 | 0 | 0 | 0 | 0 | .19 | 1.59 | 3.27 | .46 | 0 | 0 | 0 | 0 |
| 17 | 0 | 0 | 0 | 0 | .20 | 11.8 | 1.69 | .29 | 0 | 0 | 0 | 0 |
| 18 | 0 | 0 | 0 | 0 | .19 | 4.62 | .93 | .56 | 0 | 0 | 0 | 0 |
| 19 | 0 | 0 | 0 | 0 | .18 | 1.88 | .88 | .77 | 0 | 0 | 0 | 0 |
| 20 | 0 | 0 | 0 | 0 | .18 | 1.01 | .85 | .75 | 0 | 0 | 0 | 0 |
| 21 | 0 | 0 | 0 | 0 | .19 | .97 | .83 | .72 | 0 | 0 | 0 | 0 |
| 22 | 0 | 0 | 0 | .18 | .21 | 1.14 | .81 | .67 | 0 | 0 | 0 | 0 |
| 23 | 0 | 0 | 0 | .43 | .20 | 13.6 | .79 | .58 | 0 | 0 | 0 | 0 |
| 24 | 0 | 0 | 0 | .47 | .20 | 12.0 | .77 | .52 | 0 | 0 | 0 | 0 |
| 25 | 0 | 0 | 0 | .48 | .18 | 8.94 | .75 | .32 | 0 | 0 | 0 | 0 |
| 26 | 0 | 0 | 0 | .48 | .19 | 7.99 | .75 | .19 | 0 | 0 | 0 | 0 |
| 27 | 0 | 0 | 0 | .46 | .19 | 6.40 | .75 | .05 | 0 | 0 | 0 | 0 |
| 28 | 0 | 0 | 0 | .45 | .22 | 5.26 | .73 | 0 | 0 | 0 | 0 | 0 |
| 29 | 0 | 0 | 0 | .43 | .22 | 5.16 | .71 | 0 | 0 | 0 | 0 | 0 |
| 30 | 0 | 0 | 0 | .40 | ------ | 4.60 | .70 | 0 | 0 | 0 | 0 | 0 |
| 31 | 0 | ------ | 0 | .34 | ------ | 4.50 | ------ | 0 | ------ | 0 | 0 | ------ |
| Total | 0 | 0 | 0 | 4.12 | 6.28 | 118.63 | 138.79 | 15.69 | 0 | 0 | 0 | 0 |
| Mean | 0 | 0 | 0 | .13 | .22 | 3.83 | 4.63 | .51 | 0 | 0 | 0 | 0 |
| Max | 0 | 0 | 0 | .48 | .34 | 16.6 | 20.9 | .78 | 0 | 0 | 0 | 0 |
| Min | 0 | 0 | 0 | 0 | .16 | .20 | .70 | 0 | 0 | 0 | 0 | 0 |
| Acre-Ft | 0 | 0 | 0 | 8.2 | 12 | 235 | 275 | 31 | 0 | 0 | 0 | 0 |

| | | | | | | | | | | | | |
|---|---|---|---|---|---|---|---|---|---|---|---|---|
| Wtr Year 2020 | Total | 283.51 | Mean | .77 | Max | 20.9 | Min | 0 | Inst Max | 27.7 | Acre-Ft | 562 |
| Cal Year 2019 | Total | 506.13 | Mean | 1.39 | Max | 62.5 | Min | 0 | Inst Max | 153 | Acre-Ft | 1000 |

# RUNOFF – DAILY DISCHARGE

Los Angeles County Dept of Public Works USDAY V115 Output 04/20/2021

Summary Report

Site: F278 Sawpit Creek Below Sawpit Dam
USGS #:
Beginning Date: 10/01/2019
Ending Date: 09/30/2020

Daily Mean Discharge in Cubic feet/second Water Year Oct 2019 to Sep 2020

| Day | OCT | NOV | DEC | JAN | FEB | MAR | APR | MAY | JUN | JUL | AUG | SEP |
|---|---|---|---|---|---|---|---|---|---|---|---|---|
| 1 | .66 | .60 | .85 | 1.25 | .99 | .89 | 1.17 | 1.52 | .96 | .97 | .54 | .43 |
| 2 | .66 | .62 | .81 | 1.20 | 1.00 | .90 | 1.19 | 1.44 | .93 | .96 | .54 | .43 |
| 3 | .61 | .61 | .79 | 1.19 | .92 | .89 | 1.15 | 1.37 | .87 | .91 | .54 | .43 |
| 4 | .59 | .59 | 1.13 | 1.19 | .90 | .88 | 1.15 | 1.25 | .87 | .87 | .54 | .43 |
| 5 | .58 | .58 | 1.13 | 1.19 | .90 | .87 | 1.31 | 1.14 | 1.00 | .83 | .54 | .42 |
| 6 | .53 | .60 | 1.04 | 1.18 | .96 | .90 | 6.28 | 1.10 | 1.06 | .82 | .54 | .41 |
| 7 | .52 | .63 | 1.04 | 1.10 | 1.00 | .90 | 3.60 | 1.14 | .96 | .81 | .54 | .43 |
| 8 | .50 | .61 | 1.10 | 1.10 | 1.00 | .82 | 4.05 | 1.13 | .90 | .77 | .54 | .45 |
| 9 | .53 | .61 | 1.10 | 1.10 | 1.00 | .88 | 4.23 | 1.11 | .81 | .76 | .54 | .45 |
| 10 | .51 | .62 | 1.04 | 1.10 | 1.00 | 1.05 | 4.41 | 1.12 | .78 | .74 | .54 | .47 |
| 11 | .50 | .63 | 1.00 | 1.10 | .99 | .92 | 3.73 | 1.15 | .76 | .72 | .54 | .51 |
| 12 | .49 | .67 | 1.00 | 1.09 | .99 | 1.31 | 3.27 | 1.19 | .79 | .69 | .54 | .54 |
| 13 | .51 | .71 | 1.00 | 1.06 | 1.00 | 1.49 | 3.01 | 1.16 | .86 | .59 | .54 | .56 |
| 14 | .54 | .72 | 1.00 | 1.03 | .97 | 1.30 | 2.67 | 1.14 | .86 | .59 | .54 | .54 |
| 15 | .54 | .74 | .96 | 1.01 | .91 | 1.35 | 2.42 | 1.14 | .86 | .65 | .54 | .55 |
| 16 | .54 | .76 | .90 | 1.00 | .90 | 1.53 | 2.14 | 1.16 | .92 | .67 | .56 | .56 |
| 17 | .54 | .69 | .90 | 1.05 | .90 | 1.74 | 1.91 | 1.16 | .95 | .68 | .54 | .58 |
| 18 | .54 | .69 | .90 | 1.02 | .90 | 1.49 | 1.74 | 1.29 | .97 | .68 | .54 | .58 |
| 19 | .54 | .69 | .90 | 1.09 | .90 | 1.49 | 1.63 | 1.24 | .96 | .68 | .54 | .58 |
| 20 | .54 | .71 | .90 | 1.02 | .90 | 1.50 | 1.56 | 1.22 | .97 | .68 | .52 | .58 |
| 21 | .54 | .72 | .90 | 1.01 | .90 | 1.39 | 1.44 | 1.19 | .97 | .66 | .49 | .59 |
| 22 | .54 | .72 | .90 | 1.04 | .94 | 1.41 | 1.39 | 1.18 | .97 | .67 | .48 | .59 |
| 23 | .54 | .72 | 1.11 | 1.03 | .97 | 1.57 | 1.45 | 1.17 | .97 | .68 | .49 | .61 |
| 24 | .54 | .72 | 1.10 | 1.01 | .95 | 1.45 | 1.52 | 1.21 | .96 | .68 | .49 | .61 |
| 25 | .53 | .74 | 1.13 | 1.00 | .95 | 1.39 | 1.62 | 1.18 | .94 | .69 | .48 | .61 |
| 26 | .54 | .76 | 3.43 | 1.00 | .90 | 1.35 | 1.61 | 1.10 | .95 | .66 | .48 | .63 |
| 27 | .54 | .84 | 2.02 | 1.00 | .90 | 1.30 | 1.63 | 1.04 | .91 | .64 | .45 | .63 |
| 28 | .62 | 1.14 | 1.69 | 1.00 | .86 | 1.28 | 1.65 | 1.03 | .97 | .64 | .45 | .63 |
| 29 | .60 | 1.08 | 1.58 | 1.00 | .86 | 1.23 | 1.63 | 1.10 | 1.02 | .63 | .45 | .63 |
| 30 | .58 | .94 | 1.38 | 1.00 | ------ | 1.17 | 1.59 | 1.06 | .98 | .58 | .44 | .63 |
| 31 | .61 | ------ | 1.29 | 1.00 | ------ | 1.16 | ------ | 1.02 | ------ | .57 | .43 | ------ |
| Total | 17.15 | 21.46 | 36.02 | 33.16 | 27.26 | 37.80 | 68.15 | 36.45 | 27.68 | 22.17 | 15.93 | 16.09 |
| Mean | .55 | .72 | 1.16 | 1.07 | .94 | 1.22 | 2.27 | 1.18 | .92 | .72 | .51 | .54 |
| Max | .66 | 1.14 | 3.43 | 1.25 | 1.00 | 1.74 | 6.28 | 1.52 | 1.06 | .97 | .56 | .63 |
| Min | .49 | .58 | .79 | 1.00 | .86 | .82 | 1.15 | 1.02 | .76 | .57 | .43 | .41 |
| Acre-Ft | 34 | 43 | 71 | 66 | 54 | 75 | 135 | 72 | 55 | 44 | 32 | 32 |

| | | | | | | | | | | | | |
|---|---|---|---|---|---|---|---|---|---|---|---|---|
| Wtr Year 2020 | Total | 359.32 | Mean | .98 | Max | 6.28 | Min | .41 | Inst Max | 21.2 | Acre-Ft | 713 |
| Cal Year 2019 | Total | 562.33 | Mean | 1.54 | Max | 29.0 | Min | .45 | Inst Max | 165 | Acre-Ft | 1120 |

# RUNOFF – DAILY DISCHARGE

Los Angeles County Dept of Public Works USDAY V115 Output 04/20/2021

Summary Report

Site: F194B Sawpit Wash Below Live Oak Avenue
USGS #:
Beginning Date: 10/01/2019
Ending Date: 09/30/2020

Daily Mean Discharge in Cubic feet/second Water Year Oct 2019 to Sep 2020

| Day | OCT | NOV | DEC | JAN | FEB | MAR | APR | MAY | JUN | JUL | AUG | SEP |
|---|---|---|---|---|---|---|---|---|---|---|---|---|
| 1 | 6.44 | 53.0 | 1.21 | .17 | .21 | 1.81 | .26 | .98 | .33 | .36 | 100 | .34 |
| 2 | 11.5 | 52.6 | 1.11 | .16 | .24 | .29 | .27 | .45 | .33 | .41 | 66.5 | .33 |
| 3 | 12.2 | 52.1 | .98 | .15 | .35 | .27 | .46 | .44 | .39 | .37 | 2.57 | .43 |
| 4 | 13.4 | 33.8 | 72.7 | .21 | .22 | .29 | .70 | .41 | .38 | .34 | .38 | .34 |
| 5 | 14.5 | 2.61 | 2.24 | .19 | .23 | .29 | 3.46 | .39 | .48 | .45 | .51 | .37 |
| 6 | 15.9 | .75 | 1.59 | .19 | .29 | .41 | 173 | .38 | .50 | .27 | .40 | .35 |
| 7 | 17.3 | .25 | 6.45 | .18 | .48 | .52 | 14.7 | .38 | .35 | 54.2 | .47 | .36 |
| 8 | 18.4 | .20 | 7.46 | .19 | .52 | .53 | 37.9 | .39 | .33 | 219 | .38 | 89.7 |
| 9 | 20.7 | .18 | 1.54 | .20 | .52 | .59 | 24.0 | .37 | .26 | 250 | .37 | 266 |
| 10 | 17.6 | .17 | 1.36 | .21 | .52 | 4.95 | 10.1 | .36 | .34 | 247 | .36 | 258 |
| 11 | 19.2 | .16 | 1.25 | .20 | .48 | .73 | 2.84 | .41 | .37 | 249 | .34 | 260 |
| 12 | 20.7 | .16 | .73 | .18 | .54 | 81.1 | 3.91 | .45 | .31 | 247 | .36 | 263 |
| 13 | 22.9 | .21 | .20 | .21 | .52 | 25.8 | 2.81 | .38 | .32 | 245 | .32 | 259 |
| 14 | 26.5 | .18 | .21 | .21 | .52 | 1.60 | 1.15 | .52 | .33 | 241 | .46 | 243 |
| 15 | 28.3 | .19 | .17 | .27 | .52 | 2.89 | .34 | .35 | .29 | 237 | .60 | 250 |
| 16 | 29.5 | .19 | .17 | .82 | .48 | 58.9 | .31 | .38 | .38 | 233 | .32 | 315 |
| 17 | 33.2 | .16 | .20 | 3.60 | .50 | 2.02 | .36 | .34 | .39 | 231 | .32 | 307 |
| 18 | 36.9 | .15 | .16 | .24 | .43 | 1.33 | .35 | 10.8 | .36 | 229 | .45 | 309 |
| 19 | 37.6 | .23 | .28 | .22 | .28 | 12.1 | .34 | .38 | .36 | 225 | .54 | 304 |
| 20 | 37.8 | 21.6 | .73 | .22 | .29 | 1.89 | .37 | .30 | .36 | 228 | .36 | 298 |
| 21 | 40.3 | .69 | .67 | .24 | .27 | .90 | .39 | .33 | .36 | 244 | .31 | 308 |
| 22 | 42.5 | .52 | .82 | .41 | 2.77 | 18.3 | .41 | .32 | .36 | 244 | .35 | 314 |
| 23 | 44.3 | .52 | 53.8 | .22 | .39 | 10.4 | .51 | .32 | .36 | 241 | .33 | 303 |
| 24 | 46.3 | .52 | 1.59 | .29 | .28 | 1.10 | .57 | .33 | .36 | 240 | .34 | 315 |
| 25 | 46.1 | .52 | 19.7 | .24 | .28 | 1.00 | .51 | .29 | .36 | 239 | .32 | 317 |
| 26 | 47.1 | .52 | 148 | .22 | .25 | .92 | .43 | .35 | .36 | 239 | .33 | 316 |
| 27 | 48.4 | 27.6 | 3.51 | .24 | .25 | .66 | .45 | .32 | .36 | 240 | .32 | 317 |
| 28 | 49.8 | 85.4 | 2.72 | .32 | .26 | .25 | .46 | .41 | .36 | 250 | .35 | 325 |
| 29 | 50.2 | 4.56 | 2.02 | .20 | .27 | .24 | .46 | .37 | .36 | 250 | .34 | 227 |
| 30 | 51.1 | 1.33 | 1.82 | .45 | ------ | .24 | .55 | .34 | .36 | 253 | .31 | 4.33 |
| 31 | 51.6 | ------ | 1.00 | .22 | ------ | .28 | ------ | .33 | ------ | 156 | .32 | ------ |
| Total | 958.24 | 341.07 | 336.39 | 11.07 | 13.16 | 232.60 | 282.37 | 22.57 | 10.76 | 5733.40 | 179.63 | 6170.55 |
| Mean | 30.9 | 11.4 | 10.9 | .36 | .45 | 7.50 | 9.41 | .73 | .36 | 185 | 5.79 | 206 |
| Max | 51.6 | 85.4 | 148 | 3.60 | 2.77 | 81.1 | 173 | 10.8 | .50 | 253 | 100 | 325 |
| Min | 6.44 | .15 | .16 | .15 | .21 | .24 | .26 | .29 | .26 | .27 | .31 | .33 |
| Acre-Ft | 1900 | 677 | 667 | 22 | 26 | 461 | 560 | 45 | 21 | 11370 | 356 | 12240 |

| | | | | | | | | | | | | |
|---|---|---|---|---|---|---|---|---|---|---|---|---|
| Wtr Year 2020 | Total | 14291.81 | Mean | 39.0 | Max | 325 | Min | .15 | Inst Max | 2970 | Acre-Ft | 28350 |
| Cal Year 2019 | Total | 17021.49 | Mean | 46.6 | Max | 348 | Min | .04 | Inst Max | 2060 | Acre-Ft | 33760 |

# RUNOFF – DAILY DISCHARGE

Los Angeles County Dept of Public Works USDAY V115 Output 04/20/2021

Summary Report

Site: F32 Thompson Creek Below Dam
USGS #:
Beginning Date: 10/01/2019
Ending Date: 09/30/2020

Daily Mean Discharge in Cubic feet/second Water Year Oct 2019 to Sep 2020

| Day | OCT | NOV | DEC | JAN | FEB | MAR | APR | MAY | JUN | JUL | AUG | SEP |
|---|---|---|---|---|---|---|---|---|---|---|---|---|
| 1 | 0 | 0 | 0 | 0 | 0 | 0 | 0 | 0 | 0 | 0 | 0 | 0 |
| 2 | 0 | 0 | 0 | 0 | 0 | 0 | 0 | 0 | 0 | 0 | 0 | 0 |
| 3 | 0 | 0 | 0 | 0 | 0 | 0 | 0 | 0 | 0 | 0 | 0 | 0 |
| 4 | 0 | 0 | 0 | 0 | 0 | 0 | 0 | 0 | 0 | 0 | 0 | 0 |
| 5 | 0 | 0 | 0 | 0 | 0 | 0 | 0 | 0 | 0 | 0 | 0 | 0 |
| 6 | 0 | 0 | 0 | 0 | 0 | 0 | 0 | 0 | 0 | 0 | 0 | 0 |
| 7 | 0 | 0 | 0 | 0 | 0 | 0 | 0 | 0 | 0 | 0 | 0 | 0 |
| 8 | 0 | 0 | 0 | 0 | 0 | 0 | 0 | 0 | 0 | 0 | 0 | 0 |
| 9 | 0 | 0 | 0 | 0 | 0 | 0 | 0 | 0 | 0 | 0 | 0 | 0 |
| 10 | 0 | 0 | 0 | 0 | 0 | 0 | 0 | 0 | 0 | 0 | 0 | 0 |
| 11 | 0 | 0 | 0 | 0 | 0 | 0 | 0 | 0 | 0 | 0 | 0 | 0 |
| 12 | 0 | 0 | 0 | 0 | 0 | 0 | 0 | 0 | 0 | 0 | 0 | 0 |
| 13 | 0 | 0 | 0 | 0 | 0 | 0 | 0 | 0 | 0 | 0 | 0 | 0 |
| 14 | 0 | 0 | 0 | 0 | 0 | 0 | 0 | 0 | 0 | 0 | 0 | 0 |
| 15 | 0 | 0 | 0 | 0 | 0 | 0 | 0 | 0 | 0 | 0 | 0 | 0 |
| 16 | 0 | 0 | 0 | 0 | 0 | 0 | 0 | 0 | 0 | 0 | 0 | 0 |
| 17 | 0 | 0 | 0 | 0 | 0 | 0 | 0 | 0 | 0 | 0 | 0 | 0 |
| 18 | 0 | 0 | 0 | 0 | 0 | 0 | 0 | 0 | 0 | 0 | 0 | 0 |
| 19 | 0 | 0 | 0 | 0 | 0 | 0 | 0 | 0 | 0 | 0 | 0 | 0 |
| 20 | 0 | 0 | 0 | 0 | 0 | 0 | 0 | 0 | 0 | 0 | 0 | 0 |
| 21 | 0 | 0 | 0 | 0 | 0 | 0 | 0 | 0 | 0 | 0 | 0 | 0 |
| 22 | 0 | 0 | 0 | 0 | 0 | 0 | 0 | 0 | 0 | 0 | 0 | 0 |
| 23 | 0 | 0 | 0 | 0 | 0 | 0 | 0 | 0 | 0 | 0 | 0 | 0 |
| 24 | 0 | 0 | 0 | 0 | 0 | 0 | 0 | 0 | 0 | 0 | 0 | 0 |
| 25 | 0 | 0 | 0 | 0 | 0 | 0 | 0 | 0 | 0 | 0 | 0 | 0 |
| 26 | 0 | 0 | 0 | 0 | 0 | 0 | 0 | 0 | 0 | 0 | 0 | 0 |
| 27 | 0 | 0 | 0 | 0 | 0 | 0 | 0 | 0 | 0 | 0 | 0 | 0 |
| 28 | 0 | 0 | 0 | 0 | 0 | 0 | 0 | 0 | 0 | 0 | 0 | 0 |
| 29 | 0 | 0 | 0 | 0 | 0 | 0 | 0 | 0 | 0 | 0 | 0 | 0 |
| 30 | 0 | 0 | 0 | 0 | ------ | 0 | 0 | 0 | 0 | 0 | 0 | 0 |
| 31 | 0 | ------ | 0 | 0 | ------ | 0 | ------ | 0 | ------ | 0 | 0 | ------ |
| Total | 0 | 0 | 0 | 0 | 0 | 0 | 0 | 0 | 0 | 0 | 0 | 0 |
| Mean | 0 | 0 | 0 | 0 | 0 | 0 | 0 | 0 | 0 | 0 | 0 | 0 |
| Max | 0 | 0 | 0 | 0 | 0 | 0 | 0 | 0 | 0 | 0 | 0 | 0 |
| Min | 0 | 0 | 0 | 0 | 0 | 0 | 0 | 0 | 0 | 0 | 0 | 0 |
| Acre-Ft | 0 | 0 | 0 | 0 | 0 | 0 | 0 | 0 | 0 | 0 | 0 | 0 |

| | | | | | | | | | | | | |
|---|---|---|---|---|---|---|---|---|---|---|---|---|
| Wtr Year 2020 | Total | 0 | Mean | 0 | Max | 0 | Min | 0 | Inst Max | 0 | Acre-Ft | 0 |
| Cal Year 2019 | Total | 13.48 | Mean | .037 | Max | .46 | Min | 0 | Inst Max | 21.4 | Acre-Ft | 27 |

# RUNOFF – DAILY DISCHARGE

Los Angeles County Dept of Public Works USDAY V115 Output 04/20/2021

Summary Report

Site: F54C Topanga Creek Above Mouth of Canyon
USGS #:
Beginning Date: 10/01/2019
Ending Date: 09/30/2020

Daily Mean Discharge in Cubic feet/second Water Year Oct 2019 to Sep 2020

| Day | OCT | NOV | DEC | JAN | FEB | MAR | APR | MAY | JUN | JUL | AUG | SEP |
|---|---|---|---|---|---|---|---|---|---|---|---|---|
| 1 | .02 | .09 | .32 | .55 | .15 | .28 | .27 | .30 | .45 | .18 | .15 | .12 |
| 2 | .02 | .09 | .67 | .56 | .13 | .29 | .27 | .30 | .45 | .17 | .15 | .12 |
| 3 | .02 | .08 | 1.47 | .56 | .11 | .30 | .27 | .29 | .47 | .17 | .15 | .12 |
| 4 | .02 | .08 | 2.63 | .57 | .08 | .30 | .27 | .28 | .46 | .16 | .15 | .12 |
| 5 | .03 | .08 | 2.47 | .58 | .07 | .29 | .27 | .27 | .45 | .16 | .15 | .12 |
| 6 | .03 | .08 | 1.98 | .58 | .08 | .28 | 35.0 | .27 | .45 | .15 | .15 | .12 |
| 7 | .03 | .08 | 1.54 | .59 | .08 | .28 | .39 | .27 | .45 | .17 | .15 | .12 |
| 8 | .03 | .08 | 1.17 | .60 | .09 | .27 | .39 | .27 | .45 | .19 | .15 | .12 |
| 9 | .02 | .07 | .85 | .58 | .10 | .27 | .75 | .27 | .45 | .22 | .15 | .12 |
| 10 | .03 | .07 | .60 | .56 | .11 | .27 | .37 | .27 | .36 | .24 | .15 | .12 |
| 11 | .03 | .07 | .50 | .55 | .12 | .27 | .33 | .42 | .29 | .26 | .15 | .12 |
| 12 | .03 | .05 | .49 | .53 | .13 | .27 | .33 | .48 | .29 | .28 | .15 | .12 |
| 13 | .03 | .04 | .50 | .51 | .14 | .28 | .32 | .48 | .28 | .23 | .15 | .12 |
| 14 | .03 | .04 | .50 | .49 | .15 | .27 | .30 | .48 | .28 | .18 | .15 | .12 |
| 15 | .02 | .03 | .51 | .47 | .15 | .27 | .30 | .48 | .27 | .18 | .15 | .12 |
| 16 | .03 | .03 | .52 | .45 | .16 | .27 | .30 | .48 | .27 | .18 | .15 | .12 |
| 17 | .14 | .03 | .53 | .43 | .17 | .27 | .30 | .46 | .26 | .18 | .15 | .12 |
| 18 | .14 | .03 | .53 | .41 | .18 | .27 | .30 | .45 | .25 | .18 | .15 | .12 |
| 19 | .14 | .04 | .54 | .39 | .19 | .27 | .30 | .45 | .25 | .18 | .15 | .12 |
| 20 | .14 | .05 | .55 | .38 | .20 | .27 | .30 | .45 | .24 | .18 | .14 | .12 |
| 21 | .13 | .07 | .56 | .36 | .21 | .27 | .30 | .45 | .24 | .18 | .14 | .12 |
| 22 | .13 | .07 | .56 | .34 | .21 | .39 | .30 | .45 | .23 | .18 | .13 | .12 |
| 23 | .13 | .07 | 2.21 | .32 | .22 | .34 | .30 | .45 | .22 | .17 | .12 | .12 |
| 24 | .13 | .08 | .46 | .30 | .23 | .27 | .30 | .45 | .22 | .16 | .12 | .12 |
| 25 | .13 | .09 | .47 | .28 | .24 | .27 | .30 | .45 | .21 | .16 | .12 | .12 |
| 26 | .11 | .10 | 27.9 | .26 | .25 | .27 | .30 | .45 | .21 | .16 | .12 | .12 |
| 27 | .09 | .11 | .54 | .24 | .26 | .27 | .30 | .45 | .20 | .15 | .12 | .12 |
| 28 | .09 | .06 | .55 | .22 | .27 | .27 | .30 | .45 | .20 | .15 | .12 | .12 |
| 29 | .09 | 0 | .56 | .21 | .27 | .27 | .30 | .45 | .19 | .15 | .12 | .12 |
| 30 | .09 | .05 | .55 | .19 | ------ | .27 | .30 | .45 | .18 | .15 | .12 | .12 |
| 31 | .09 | ------ | .54 | .17 | ------ | .27 | ------ | .45 | ------ | .15 | .12 | ------ |
| Total | 2.19 | 1.91 | 53.77 | 13.23 | 4.75 | 8.70 | 44.33 | 12.37 | 9.22 | 5.60 | 4.34 | 3.60 |
| Mean | .071 | .064 | 1.73 | .43 | .16 | .28 | 1.48 | .40 | .31 | .18 | .14 | .12 |
| Max | .14 | .11 | 27.9 | .60 | .27 | .39 | 35.0 | .48 | .47 | .28 | .15 | .12 |
| Min | .02 | 0 | .32 | .17 | .07 | .27 | .27 | .27 | .18 | .15 | .12 | .12 |
| Acre-Ft | 4.3 | 3.8 | 107 | 26 | 9.4 | 17 | 88 | 25 | 18 | 11 | 8.6 | 7.1 |

| | | | | | | | | | | | | |
|---|---|---|---|---|---|---|---|---|---|---|---|---|
| Wtr Year 2020 | Total | 164.01 | Mean | .45 | Max | 35.0 | Min | 0 | Inst Max | 354 | Acre-Ft | 325 |
| Cal Year 2019 | Total | 506.60 | Mean | 1.39 | Max | 210 | Min | 0 | Inst Max | 1110 | Acre-Ft | 1000 |

# RUNOFF – DAILY DISCHARGE

Los Angeles County Dept of Public Works USDAY V115 Output 04/20/2021

Summary Report

Site: F252 Verdugo Wash At Estelle Avenue
USGS #:
Beginning Date: 10/01/2019
Ending Date: 09/30/2020

Daily Mean Discharge in Cubic feet/second Water Year Oct 2019 to Sep 2020

| Day | OCT | NOV | DEC | JAN | FEB | MAR | APR | MAY | JUN | JUL | AUG | SEP |
|---|---|---|---|---|---|---|---|---|---|---|---|---|
| 1 | .70 | 1.01 | 1.87 | 2.97 | .57 | 1.83 | .20 | 2.92 | 1.46 | .63 | 1.01 | .63 |
| 2 | .66 | 1.01 | 1.67 | 3.01 | .60 | 1.54 | .82 | 2.57 | 1.46 | .63 | 1.01 | .63 |
| 3 | .71 | 1.01 | 1.46 | 2.92 | .61 | 1.87 | .87 | 2.57 | 1.46 | .63 | 1.01 | .63 |
| 4 | 1.22 | 1.22 | 150 | 2.83 | .42 | 1.74 | 1.40 | 2.13 | 1.46 | .63 | 1.01 | .63 |
| 5 | 1.91 | 1.46 | 11.9 | 2.74 | 1.50 | 1.81 | 1.53 | 1.98 | 1.46 | .63 | 1.01 | .63 |
| 6 | 2.72 | 1.46 | 5.86 | 2.39 | 1.85 | 1.89 | 336 | 1.98 | 1.46 | .63 | 1.01 | .63 |
| 7 | 3.63 | 1.70 | 13.9 | 2.41 | 1.80 | 1.91 | 164 | 1.98 | 1.46 | .63 | 1.01 | .63 |
| 8 | 2.85 | 1.69 | 91.7 | 2.57 | 1.76 | 1.58 | 193 | 1.98 | 1.46 | .63 | 1.01 | .63 |
| 9 | 1.61 | 1.68 | 11.1 | 2.57 | 6.46 | 1.44 | 43.0 | 1.98 | 1.46 | .98 | .65 | .63 |
| 10 | 1.46 | 1.63 | 3.74 | 2.44 | 7.55 | 13.7 | 46.4 | 1.98 | 1.46 | 1.01 | .63 | .63 |
| 11 | 1.35 | 1.75 | 2.44 | 2.20 | 3.58 | 16.4 | 18.0 | 1.96 | 1.46 | 1.33 | .63 | .63 |
| 12 | 1.01 | 1.76 | 1.98 | 2.31 | 2.44 | 162 | 8.68 | 1.46 | 1.03 | 1.44 | .63 | .63 |
| 13 | 1.01 | 1.95 | 1.98 | 2.29 | 2.18 | 134 | 13.3 | 1.46 | 1.01 | 1.17 | .63 | .63 |
| 14 | 1.39 | 1.83 | 1.98 | 1.98 | 1.04 | 19.2 | 8.81 | 1.46 | 1.01 | 1.46 | .63 | .63 |
| 15 | 1.46 | 1.46 | 1.98 | 1.46 | 1.01 | 10.2 | 6.05 | 1.46 | .72 | 1.46 | .92 | .63 |
| 16 | 1.46 | 1.46 | 1.98 | 1.48 | .92 | 115 | 4.58 | 1.46 | .63 | 1.46 | 1.01 | .63 |
| 17 | 1.46 | 1.46 | 1.98 | 11.2 | .94 | 48.6 | 3.90 | 1.46 | .63 | 1.46 | 1.01 | .63 |
| 18 | 1.46 | 3.48 | 1.98 | 3.31 | .91 | 1.49 | 3.90 | 11.0 | .63 | 1.46 | 1.01 | .63 |
| 19 | 1.46 | 1.46 | 1.98 | 1.67 | .87 | 5.56 | 3.90 | 7.90 | .63 | 1.04 | 1.01 | .63 |
| 20 | 1.46 | 5.22 | 1.98 | 1.46 | .88 | 3.48 | 3.46 | 3.73 | .63 | 1.01 | 1.01 | .63 |
| 21 | 1.46 | 1.65 | 1.98 | 1.83 | .91 | 1.45 | 3.21 | 3.02 | .63 | 1.01 | 1.01 | .63 |
| 22 | 1.69 | 1.94 | 2.25 | 2.30 | 2.66 | 49.2 | 3.21 | 2.57 | .63 | 1.01 | 1.01 | .63 |
| 23 | 1.46 | 1.95 | 161 | 2.45 | 2.41 | 145 | 3.21 | 2.15 | .63 | 1.01 | 1.01 | .63 |
| 24 | 1.46 | 1.46 | 9.20 | 1.72 | 1.36 | 1.98 | 3.21 | 1.98 | .63 | 1.01 | 1.01 | .63 |
| 25 | 1.61 | 1.46 | 24.2 | 1.49 | 1.28 | .74 | 3.21 | 1.98 | .63 | 1.01 | 1.01 | .63 |
| 26 | 1.64 | 1.68 | 349 | 1.17 | 1.17 | .88 | 3.21 | 1.98 | .63 | 1.01 | 1.01 | .63 |
| 27 | 1.67 | 40.1 | 11.8 | 1.21 | .91 | .50 | 3.21 | 1.98 | .63 | 1.01 | 1.01 | .63 |
| 28 | 1.56 | 130 | 4.92 | 1.04 | .50 | .20 | 3.21 | 1.91 | .63 | 1.01 | .90 | .63 |
| 29 | 1.58 | 15.1 | 2.89 | .63 | .63 | .04 | 3.21 | 1.46 | .63 | 1.01 | .63 | .63 |
| 30 | 1.63 | 1.74 | 1.98 | .52 | ------ | .02 | 3.21 | 1.46 | .63 | 1.01 | .63 | .63 |
| 31 | 1.24 | ------ | 2.32 | .55 | ------ | 0 | ------ | 1.46 | ------ | 1.01 | .63 | ------ |
| Total | 47.99 | 232.78 | 885.00 | 71.12 | 49.72 | 745.25 | 893.90 | 77.37 | 29.28 | 31.43 | 27.71 | 18.90 |
| Mean | 1.55 | 7.76 | 28.5 | 2.29 | 1.71 | 24.0 | 29.8 | 2.50 | .98 | 1.01 | .89 | .63 |
| Max | 3.63 | 130 | 349 | 11.2 | 7.55 | 162 | 336 | 11.0 | 1.46 | 1.46 | 1.01 | .63 |
| Min | .66 | 1.01 | 1.46 | .52 | .42 | 0 | .20 | 1.46 | .63 | .63 | .63 | .63 |
| Acre-Ft | 95 | 462 | 1760 | 141 | 99 | 1480 | 1770 | 153 | 58 | 62 | 55 | 37 |

| | | | | | | | | | | | | |
|---|---|---|---|---|---|---|---|---|---|---|---|---|
| Wtr Year 2020 | Total | 3110.45 | Mean | 8.50 | Max | 349 | Min | 0 | Inst Max | 2710 | Acre-Ft | 6170 |
| Cal Year 2019 | Total | 5797.03 | Mean | 15.9 | Max | 635 | Min | .66 | Inst Max | 5350 | Acre-Ft | 11500 |

# RUNOFF – DAILY DISCHARGE

Los Angeles County Dept of Public Works USDAY V115 Output 04/20/2021

Summary Report

Site: F304 Walnut Creek at Puente Avenue
USGS #:
Beginning Date: 10/01/2019
Ending Date: 09/30/2020

Daily Mean Discharge in Cubic feet/second Water Year Oct 2019 to Sep 2020

| Day | OCT | NOV | DEC | JAN | FEB | MAR | APR | MAY | JUN | JUL | AUG | SEP |
|---|---|---|---|---|---|---|---|---|---|---|---|---|
| 1 | .26 | .28 | 1.97 | 152 | .29 | .55 | .25 | 1.20 | 1.46 | 1.50 | 1.27 | 1.41 |
| 2 | .33 | .56 | 1.53 | 90.9 | .23 | .67 | .29 | 1.20 | 1.46 | 1.40 | 1.34 | 1.47 |
| 3 | .34 | .34 | 1.45 | 1.59 | .24 | .30 | .23 | 1.20 | 1.23 | 1.45 | 1.35 | 1.47 |
| 4 | .31 | .73 | 276 | 1.59 | .12 | .46 | .23 | 1.20 | 1.55 | 1.20 | 1.42 | 1.36 |
| 5 | .46 | .32 | 8.99 | 1.59 | .21 | .74 | .37 | 1.20 | 1.61 | 1.17 | 1.30 | 1.34 |
| 6 | .33 | .38 | 7.50 | 1.11 | .23 | .57 | 231 | 1.20 | 1.67 | 1.18 | 1.47 | 1.33 |
| 7 | .25 | .41 | 8.29 | .23 | .28 | .50 | 64.2 | 1.20 | 1.69 | 1.30 | 1.23 | 1.53 |
| 8 | .23 | .40 | 7.38 | .23 | .28 | .38 | 35.2 | 1.20 | 1.42 | 1.25 | 1.18 | 2.36 |
| 9 | .35 | .38 | 1.93 | .23 | .29 | .91 | 118 | 1.20 | 1.32 | 1.23 | 1.19 | 3.05 |
| 10 | .31 | .49 | 1.56 | .31 | .31 | 32.0 | 69.1 | 1.20 | 1.38 | 1.12 | 2.06 | 1.90 |
| 11 | .22 | .38 | 1.24 | .25 | .31 | 2.55 | 25.5 | 1.20 | 2.89 | 1.13 | 1.30 | 1.79 |
| 12 | .12 | .36 | 1.20 | .23 | .27 | 297 | 25.8 | 1.20 | 1.21 | 1.10 | 1.11 | 1.86 |
| 13 | .12 | .48 | 1.20 | .23 | .23 | 63.8 | 29.3 | 1.20 | 1.17 | 1.11 | 1.23 | 1.60 |
| 14 | .16 | .50 | 1.20 | .23 | .25 | 3.46 | 31.9 | 1.20 | 1.23 | 1.11 | 1.19 | 1.94 |
| 15 | .18 | 1.21 | 1.20 | .34 | .25 | 8.38 | 47.8 | 1.20 | 1.35 | 1.29 | 1.24 | 2.25 |
| 16 | .20 | .61 | 1.20 | 1.96 | .23 | 68.5 | 47.8 | 1.20 | 1.30 | 1.22 | 1.35 | 1.41 |
| 17 | .46 | .45 | 1.31 | 9.67 | .46 | 7.28 | 43.1 | 1.76 | 1.41 | 1.31 | 1.32 | 1.34 |
| 18 | .46 | .47 | 1.20 | 1.21 | 1.01 | 2.23 | 54.9 | 1.72 | 1.68 | 1.38 | 1.32 | 1.27 |
| 19 | .42 | .82 | 1.25 | 1.20 | .25 | 56.1 | 56.3 | .99 | 1.49 | 1.31 | 1.38 | 1.42 |
| 20 | .43 | 92.8 | 1.20 | 1.20 | .30 | 5.58 | 57.7 | .87 | 1.57 | 1.40 | 1.48 | 1.33 |
| 21 | .37 | 5.24 | 1.20 | 1.20 | .42 | .33 | 36.0 | 1.21 | 1.45 | 1.32 | 1.61 | 1.46 |
| 22 | .40 | 3.37 | 1.25 | 1.07 | .24 | 44.4 | 4.20 | 1.56 | 1.40 | 1.32 | 1.46 | 1.43 |
| 23 | .39 | 3.71 | 167 | .38 | .36 | 35.3 | 1.90 | 1.55 | 1.32 | 1.50 | 1.49 | 2.37 |
| 24 | .42 | 3.26 | 6.72 | .29 | .27 | 2.53 | 1.59 | 1.76 | 1.40 | 1.37 | 1.55 | 1.35 |
| 25 | .46 | 3.22 | 28.9 | .32 | .29 | 1.91 | 1.59 | 1.48 | 1.30 | 1.25 | 1.59 | 1.55 |
| 26 | .39 | 2.64 | 556 | .23 | .29 | .99 | 1.56 | 1.45 | 1.41 | 1.38 | 1.34 | 1.84 |
| 27 | .32 | 63.9 | .87 | .26 | .32 | .20 | 1.42 | 1.53 | 1.40 | 1.38 | 1.30 | 1.44 |
| 28 | .34 | 291 | .87 | .23 | .28 | .21 | 1.49 | | 1.52 | 1.31 | 1.39 | 1.48 |
| 29 | .56 | 21.4 | .87 | .20 | .58 | .19 | 1.20 | 1.55 | 2.06 | 1.32 | 1.41 | 1.47 |
| 30 | .30 | 2.67 | .87 | .26 | ------ | .18 | 1.20 | 1.45 | 1.52 | 1.31 | 1.35 | 1.34 |
| 31 | .24 | ------ | .87 | .25 | ------ | .26 | ------ | 1.47 | ------ | 1.33 | 1.87 | ------ |
| Total | 10.13 | 502.78 | 1094.22 | 270.99 | 9.09 | 638.46 | 991.12 | 39.55 | 44.87 | 39.95 | 43.09 | 49.16 |
| Mean | .33 | 16.8 | 35.3 | 8.74 | .31 | 20.6 | 33.0 | 1.32 | 1.50 | 1.29 | 1.39 | 1.64 |
| Max | .56 | 291 | 556 | 152 | 1.01 | 297 | 231 | 1.76 | 2.89 | 1.50 | 2.06 | 3.05 |
| Min | .12 | .28 | .87 | .20 | .12 | .18 | .23 | .87 | 1.17 | 1.10 | 1.11 | 1.27 |
| Acre-Ft | 20 | 997 | 2170 | 538 | 18 | 1270 | 1970 | 78 | 89 | 79 | 85 | 98 |

| | | | | | | | | | | | | |
|---|---|---|---|---|---|---|---|---|---|---|---|---|
| Wtr Year 2020 | Total | 3733.41 | Mean | 10.2 | Max | 556 | Min | .12 | Inst Max | 2440 | Acre-Ft | 7410 |
| Cal Year 2019 | Total | 7115.67 | Mean | 19.5 | Max | 1090 | Min | .12 | Inst Max | 3100 | Acre-Ft | 14110 |

# RUNOFF – DAILY DISCHARGE

Los Angeles County Dept of Public Works USDAY V115 Output 04/20/2021

Summary Report

Site: F40 Walnut Creek Below Puddingstone Dam
USGS #:
Beginning Date: 10/01/2019
Ending Date: 09/30/2020

Daily Mean Discharge in Cubic feet/second Water Year Oct 2019 to Sep 2020

| Day | OCT | NOV | DEC | JAN | FEB | MAR | APR | MAY | JUN | JUL | AUG | SEP |
|---|---|---|---|---|---|---|---|---|---|---|---|---|
| 1 | .81 | 1.08 | 1.40 | 141 | .87 | .46 | .44 | .92 | 1.08 | .94 | .79 | .91 |
| 2 | .85 | 1.08 | 1.44 | 89.0 | .56 | .44 | .46 | .97 | 1.08 | .96 | .79 | .90 |
| 3 | .89 | 1.08 | 1.38 | 18.0 | .50 | .64 | .45 | 1.11 | 1.08 | .97 | .83 | .90 |
| 4 | .93 | 1.08 | 1.33 | 6.21 | .87 | .82 | .44 | 1.07 | 1.05 | .98 | .88 | .90 |
| 5 | .87 | 1.03 | 1.38 | 2.80 | .92 | .78 | .47 | .89 | 1.07 | .99 | .90 | .92 |
| 6 | .84 | .95 | 1.24 | 1.85 | .93 | .65 | .66 | .73 | 1.08 | 1.00 | .93 | .89 |
| 7 | .78 | 1.01 | 1.21 | 1.34 | .92 | .57 | .88 | .62 | 1.09 | 1.02 | .94 | .12 |
| 8 | .73 | .99 | 1.03 | 1.10 | .83 | .73 | 2.46 | .64 | 1.03 | .99 | .90 | 0 |
| 9 | .71 | .88 | 1.15 | .96 | .53 | .85 | 12.1 | .67 | .98 | .89 | .85 | .66 |
| 10 | 1.07 | .88 | 1.24 | 1.09 | .52 | .85 | 17.8 | .68 | .97 | .89 | .80 | .87 |
| 11 | 1.35 | .92 | 1.23 | 1.00 | .78 | .73 | 19.6 | .73 | .98 | .89 | .78 | .85 |
| 12 | 1.46 | .97 | 1.17 | .95 | .90 | .60 | 20.1 | .88 | 1.03 | .89 | .75 | .86 |
| 13 | 1.59 | .96 | 1.07 | .95 | .87 | .79 | 20.2 | .99 | 1.07 | .91 | .69 | .90 |
| 14 | 1.71 | 1.05 | .83 | .95 | .90 | .94 | 36.4 | .97 | 1.07 | .92 | .63 | .93 |
| 15 | 1.76 | .99 | 1.06 | .86 | .96 | .88 | 50.4 | .82 | 1.06 | .96 | .65 | .92 |
| 16 | 1.51 | .97 | 1.28 | .93 | .88 | .75 | 48.4 | .69 | 1.08 | .96 | .70 | .92 |
| 17 | 1.25 | 1.00 | 1.29 | .99 | .71 | .80 | 48.8 | .78 | 1.07 | .92 | .72 | .89 |
| 18 | 1.45 | .83 | 1.24 | .99 | .76 | .65 | 50.5 | .97 | 1.09 | .92 | .70 | .90 |
| 19 | 1.47 | .61 | 1.24 | .95 | .80 | .88 | 50.5 | 1.24 | 1.07 | .90 | .70 | .94 |
| 20 | 1.52 | .62 | 1.24 | .89 | .79 | .93 | 50.9 | 1.18 | 1.08 | .89 | .72 | .95 |
| 21 | 1.60 | 1.03 | 1.17 | .93 | .61 | .87 | 35.7 | 1.04 | 1.06 | .91 | .74 | .96 |
| 22 | 1.57 | 1.24 | .97 | .94 | .64 | .80 | 5.88 | .96 | 1.01 | .92 | .76 | .98 |
| 23 | 1.39 | 1.24 | .83 | .87 | .91 | .94 | 1.66 | .99 | .95 | .96 | .80 | .99 |
| 24 | 1.34 | 1.24 | .97 | .67 | .87 | .87 | .88 | 1.00 | .95 | .99 | .83 | .99 |
| 25 | 1.18 | 1.16 | 1.03 | .75 | .86 | .74 | .73 | .90 | .94 | .99 | .83 | .98 |
| 26 | .91 | 1.23 | 1.29 | .82 | .83 | .72 | .70 | .93 | .94 | .92 | .82 | 1.02 |
| 27 | .86 | .89 | 1.88 | .88 | .74 | .77 | .72 | .95 | .87 | .90 | .80 | .73 |
| 28 | .98 | .94 | 4.63 | .80 | .68 | .77 | .78 | .99 | .90 | .93 | .82 | 1.01 |
| 29 | .94 | 1.38 | 6.95 | .69 | .56 | .78 | .80 | 1.03 | .94 | .93 | .85 | 1.01 |
| 30 | 1.06 | 1.38 | 7.83 | .82 | ------ | .81 | .84 | 1.08 | .92 | .90 | .88 | 1.00 |
| 31 | 1.08 | ------ | 66.9 | .90 | ------ | .59 | ------ | 1.08 | ------ | .85 | .90 | ------ |
| Total | 36.46 | 30.71 | 118.90 | 281.88 | 22.50 | 23.40 | 480.65 | 28.50 | 30.59 | 28.99 | 24.68 | 25.80 |
| Mean | 1.18 | 1.02 | 3.84 | 9.09 | .78 | .75 | 16.0 | .92 | 1.02 | .94 | .80 | .86 |
| Max | 1.76 | 1.38 | 66.9 | 141 | .96 | .94 | 50.9 | 1.24 | 1.09 | 1.02 | .94 | 1.02 |
| Min | .71 | .61 | .83 | .67 | .50 | .44 | .44 | .62 | .87 | .85 | .63 | 0 |
| Acre-Ft | 72 | 61 | 236 | 559 | 45 | 46 | 953 | 57 | 61 | 58 | 49 | 51 |

| | | | | | | | | | | | | |
|---|---|---|---|---|---|---|---|---|---|---|---|---|
| Wtr Year 2020 | Total | 1133.06 | Mean | 3.10 | Max | 141 | Min | 0 | Inst Max | 396 | Acre-Ft | 2250 |
| Cal Year 2019 | Total | 2504.68 | Mean | 6.90 | Max | 444 | Min | .39 | Inst Max | 633 | Acre-Ft | 4970 |

# APPENDIX D

## HYDROLOGIC REPORT 2019 – 2020

## RUNOFF - STREAM GAGING STATION PEAK FLOW

# RUNOFF – STREAM GAGING STATION PEAK FLOW

## ALHAMBRA WASH above Klingerman Street
## STATION NO. F81D-R

| Season | Daily CFS | | | Total Runoff | Peak Flow | |
|---|---|---|---|---|---|---|
| | Maximum | Minimum | Mean | (Acre-feet) | Date | CFS |
| 1929-30 | N.D. | 0 | N.D. | 635 | Mar 14 | 1,870 |
| 1930-31 | 226 | 0 | 2.1 | 1,480 | Feb 03 | 1,530 |
| 1931-32 | 220 | 0 | 2.7 | 1,940 | Jan 31 | 1,120 |
| 1932-33 | 418 | 0 | 2.3 | 1,680 | Jan 19 | 1,850 |
| 1933-34 | 1,770 | 0 | 8 | 5,820 | Jan 01 | 4,890 |
| 1934-35 | 219 | 0 | 3.3 | 2,380 | Jan 05 | 2,280 |
| 1935-36 | 144 | 0 | 2 | 1,420 | Feb 12 | 1,700 |
| 1936-37 | 309 | 0 | 5.4 | 3,880 | Mar 15 | 2,470 |
| 1937-38 | 997 | 0 | 7.6 | 5,520 | Mar 02 | 5,010 |
| 1938-39 | 288 | 0 | 4.1 | 2,990 | Jan 05 | 2,480 |
| 1939-40 | 130 | 0 | 2.4 | 1,730 | Feb 01 | 1,280 |
| 1940-41 | 219 | 0 | 7.8 | 5,650 | Mar 03 | 2,080 |
| 1941-42 | 193 | 0 | 2.5 | 1,810 | Dec 10 | 2,320 |
| 1942-43 | 893 | 0 | 8.4 | 6,070 | Mar 04 | 4,480 |
| 1943-44 | 454 | + | 5.6 | 4,100 | Feb 22 | 1,860 |
| 1944-45 | 199 | 0.1 | 3.1 | 2,250 | Nov 11 | 2,220 |
| 1945-46 | 342 | 0.1 | 4.1 | 3,000 | Dec 22 | 1,600 |
| 1946-47 | 345 | 0.1 | 5.2 | 3,800 | Nov 13 | 3,810 |
| 1947-48 | 155 | 0.1 | 2.8 | 2,040 | Mar 24 | 2,670 |
| 1948-49 | 95 | 0.2 | 2.8 | 2,020 | Dec 17 | 758 |
| 1949-50 | 254 | 0.2 | 4.3 | 3,090 | Feb 06 | 1,630 |
| 1950-51 | 106 | 0.2 | 3.3 | 2,360 | Jan 11 | 1,620 |
| 1951-52 | 594 | 0.2 | 12.5 | 9,040 | Jan 16 | 3,810 |
| 1952-53 | 228 | 0.1 | 4.5 | 3,240 | Nov 15 | 3,140 |
| 1953-54 | 369 | 0.2 | 5.2 | 3,770 | Feb 13 | 2,410 |
| 1954-55 | 185 | 0.2 | 4.2 | 3,020 | Jan 18 | 1,890 |
| 1955-56 | 1,100 | 0.3 | 7.6 | 5,520 | Jan 26 | 4,550 |
| 1956-57 | 242 | 0.6 | 6.1 | 4,440 | Feb 23 | 3,090 |
| 1957-58 | 544 | 0.3 | 12.8 | 9,270 | Feb 19 | 4,830 |
| 1958-59 | 279 | 0.2 | 4.2 | 3,020 | Jan 06 | 3,170 |
| 1959-60 | 200 | 0.1 | 3.8 | 2,720 | Jan 11 | 1,710 |
| 1960-61 | 153 | 0.3 | 2.5 | 1,790 | Nov 05 | 1,480 |
| 1961-62 | 382 | 0.1 | 9.1 | 6,270 | Feb 12 | 2,560 |

M Data missing
* Record incomplete
E Estimate
N.D. Not determined
** Record not computed
\+ Less than 0.05 acre feet or less than 0.05 cfs, but greater than 0

# RUNOFF – STREAM GAGING STATION PEAK FLOW

## ALHAMBRA WASH above Klingerman Street
## STATION NO. F81D-R

| Season | Daily CFS | | | Total Runoff (Acre-feet) | Peak Flow | |
|---|---|---|---|---|---|---|
| | Maximum | Minimum | Mean | | Date | CFS |
| 1962-63 | 359 | 0.1 | 4 | 2,880 | Mar 16 | 2,210 |
| 1963-64 | 196 | 0.2 | 4 | 2,870 | Jan 21 | 2,210 |
| 1964-65 | 339 | 0.1 | 6.4 | 4,610 | Apr 09 | 3,730 |
| 1965-66 | 686 | 0.3 | 10.7 | 7,740 | Nov 24 | 3,520 |
| 1966-67 | 662 | 0.4 | 12.2 | 8,820 | Jan 22 | 3,550 |
| 1967-68 | 398 | 0.4 | 6.5 | 4,740 | Mar 08 | 3,480 |
| 1968-69 | 999 | 0.4 | 17 | 12,300 | Feb 06 | 3,980 |
| 1969-70 | 486 | 0.3 | 5.3 | 1,871 | Feb 28 | 3,430 |
| 1970-71 | 648 | 0.4 | 7.1 | 2,601 | Nov 29 | 4,040 |
| 1971-72 | 449 | 0.3 | 2.5 | 3,000 | Dec 24 | 2,000 |
| 1972-73 | 555 | 0.3 | 12.6 | 9,110 | Feb 11 | 4,450 |
| 1973-74 | 813 | 0.3 | 7.9 | 5,720 | Jan 07 | 4,330 |
| 1974-75 | 429 | 0.3 | 5.6 | 4,070 | Dec 04 | 6,000 |
| 1975-76 | 274 | 0.3 | 5.3 | 3,790 | Feb 05 | 1,820 |
| 1976-77 | 252 | 0.3 | 6 | 4,340 | Oct 22 | 1,770 |
| 1977-78 | 695 | 0.3 | 17 | 11,927 | Mar 01 | 5,950 |
| 1978-79 | 836 | 0.3 | 10.5 | 7,614 | Mar 27 | 4,484 |
| 1979-80 | 1,240 | 0.3 | 18.4 | 13,051 | Feb 16 | 6,660 |
| 1980-81 | 196 | 0.1 | 5.1 | 3,720 | Mar 19 | 2,750 |
| 1981-82 | 371 | 0.2 | 6 | 4,317 | Mar 17 | 2,410 |
| 1982-83 | 1,050 | 0.1 | 17.8 | 12,941 | Mar 01 | 7,010 |
| 1983-84 | 235 | 0.4 | 3.7 | 2,715 | Dec 25 | 2,480 |
| 1984-85 | 260 | 0.3 | 4.9 | 3,543 | Dec 19 | 3,050 |
| 1985-86 | 329 | 0.3 | 9.2 | 6,633 | Mar 08 | 4,130 |
| 1986-87 | 177 | 0.6 | 3.6 | 2,579 | Oct 02 | 5,670 |
| 1987-88 | 386 | 0.6 | 7 | 5,048 | Dec 04 | 4,500 |
| 1988-89 | 226 | 0.9 | 5.2 | 3,570 | Dec 21 | 1,410 |
| 1989-90 | 530 | 0.9 | 4.8 | 3,483 | Feb 17 | 2,010 |
| 1990-91 | 452 | 0.6 | 7.6 | 5,437 | Mar 01 | 2,700 |
| 1991-92 | 570 | 0.7 | 13.8 | 10,008 | Feb 12 | 6,340 |
| 1992-93 | 796 | 1 | 20.5 | 14,810 | Dec 07 | 5,880 |
| 1993-94 | 260 | 0.5 | 7.1 | 5,157 | Mar 24 | 3,000 |
| 1994-95 | 875 | 0.2 | 14.3 | 10,380 | Mar 10 | 8,080 |

M Data missing
* Record incomplete
E Estimate
N.D. Not determined
** Record not computed
\+ Less than 0.05 acre feet or less than 0.05 cfs, but greater than 0

# RUNOFF – STREAM GAGING STATION PEAK FLOW

## ALHAMBRA WASH above Klingerman Street
## STATION NO. F81D-R

| Season | Daily CFS | | | Total Runoff (Acre-feet) | Peak Flow | |
|---|---|---|---|---|---|---|
| | Maximum | Minimum | Mean | | Date | CFS |
| 1995-96 | 462 | 0.4 | 7 | 5,071 | Jan 31 | 8,110 |
| 1996-97 | 279 | 0.3 | 8.7 | 6,260 | Jan 15 | 2,640 |
| 1997-98 | 727 | 0.6 | 20.2 | 14,660 | Feb 06 | 7,770 |
| 1998-99 | 142 | 0.3 | 6.1 | 4,400 | Nov 28 | 3,500 |
| 1999-00 | 306 | 0.4 | 8.5 | 6,170 | Feb 21 | 4,480 |
| 2000-01 | 404 | 0.6 | 10.2 | 7,380 | Jan 11 | 3,220 |
| 2001-02 | 326 | 0.8 | 7.5 | 5,457 | Nov 24 | 6,153 |
| 2002-03 | 882 | 0.5 | 13.3 | 9,652 | Mar 15 | 5,980 |
| 2003-04 | 785 | 0.3 | 10 | 7,539 | Feb 26 | 6,030 |
| 2004-05 | 982 | 0 | 27.3 | 19,800 | Feb 20 | 7,180 |
| 2005-06 | 469 | 0.7 | 11.9 | 8,590 | Jan 02 | 6,098 |
| 2006-07 | 194 | 1.6 | 8 | 5,769 | Feb 11 | 2,552 |
| 2007-08 | 596 | 0.05 | 10.4 | 7,540 | Jan 04 | 5,556 |
| 2008-09 | 355 | 1.1 | 9.2 | 6,630 | Feb 05 | 5,360 |
| 2009-10 | 558 | 0.4 | 12.8 | 9,260 | Jan 18 | 5,490 |
| 2010-11 | 758 | 0.34 | 14.4 | 10,440 | Dec 22 | 3,260 |
| 2011-12 | 274 | 0.35 | 6.29 | 4,560 | Mar 17 | 3,280 |
| 2012-13 | 127 | 0.17 | 3.75 | 2,710 | Oct 11 | 1,070 |
| 2013-14 | 346 | 0.33 | 3.03 | 2,200 | Feb 28 | 2,090 |
| 2014-15 | 317 | 0.26 | 4.61 | 3,340 | Dec 12 | 5,950 |
| 2015-16 | 441 | 0.25 | 4.36 | 3,160 | Jan 05 | 4,160 |
| 2016-17 | 478 | 0.29 | 8.93 | 6,470 | Dec 23 | 3,680 |
| 2017-18 | 249 | 0.35 | 2.77 | 2,010 | Jan 09 | 1,420 |
| 2018-19 | 523 | 0.32 | 10.7 | 7,750 | Feb 02 | 7,240 |
| 2019-20 | 447 | 0,26 | 6.66 | 4,830 | Apr 06 | 5,700 |

M Data missing
* Record incomplete
E Estimate
N.D. Not determined
** Record not computed
\+ Less than 0.05 acre feet or less than 0.05 cfs, but greater than 0

# RUNOFF – STREAM GAGING STATION PEAK FLOW

## ARCADIA WASH below Grand Ave
## STATION NO. F317-R

| Season | Daily CFS | | | Total Runoff (Acre-feet) | Peak Flow | |
|---|---|---|---|---|---|---|
| | Maximum | Minimum | Mean | | Date | CFS |
| 1956-57 | 108 | 0.1 | 1.8 | 1,340 | Feb 23 | 1,184 |
| 1957-58 | 212 | 0.1 | 4.6 | 3,330 | Feb 01 | 1,932 |
| 1958-59 | 127 | 0.2 | 1.9 | 1,360 | Jan 06 | 1,270 |
| 1959-60 | 101 | 0.3 | 1.7 | 1,220 | Apr 27 | 593 |
| 1960-61 | 69 | + | 1.1 | 831 | Nov 05 | 570 |
| 1961-62 | 408 | 0.1 | 4.7 | 3,400 | Feb 11 | 1,480 |
| 1962-63 | 153 | 0.2 | 2.1 | 1,510 | Feb 09 | 600 |
| 1963-64 | 120 | 0.1 | 2.2 | 1,620 | Nov 20 | 1,340 |
| 1964-65 | 153 | 0.1 | 3.1 | 2,270 | Apr 09 | 1,460 |
| 1965-66 | 267 | 0.1 | 4.7 | 3,430 | Dec 29 | 1,270 |
| 1966-67 | 283 | 0.3 | 6.3 | 4,560 | Jan 22 | 1,260 |
| 1967-68 | M | M | M | M | | M |
| 1968-69 | M | M | M | M | | M |
| 1969-70 | M | M | M | M | | M |
| 1970-71 | M | M | M | M | | M |
| 1971-72 | M | M | M | M | | M |
| 1972-73 | M | M | M | M | | M |
| 1973-74 | 279 | 0.3 | 4 | 2,910 | Jan 07 | 931 |
| 1974-75 | 207 | 0.3 | 3.2 | 2,290 | Dec 04 | 2,560 |
| 1975-76 | 167 | 0.3 | 3.6 | 2,600 | Sep 11 | 1,400 |
| 1976-77 | 119 | 0.2 | 2.9 | 2,121 | Oct 23 | 1,320 |
| 1977-78 | 355 | 0.2 | 9.4 | 6,823 | Feb 10 | 4,110 |
| 1978-79 | 128 | 0.2 | 4.5 | 3,263 | Mar 27 | 1,290 |
| 1979-80 | 633 | 0 | 9.9 | 7,025 | Jan 29 | 3,280 |
| 1980-81 | 104 | 0.4 | 2.8 | 1,991 | Jan 29 | 1,050 |
| 1981-82 | 208 | 0.4 | 4.3 | 3,137 | Mar 17 | 2,470 |
| 1982-83 | 435 | 0.4 | 10.8 | 7,824 | Mar 01 | 4,110 |
| 1983-84 | 121 | 0 | 3.2 | 2,354 | Oct 01 | 1,430 |
| 1984-85 | 137 | 0.1 | 4.7 | 3,399 | Dec 19 | 1,420 |
| 1985-86 | 211 | 0 | 8.4 | 6,116 | Mar 08 | 1,760 |
| 1986-87 | 172 | 0.1 | 3.5 | 2,530 | Oct 02 | 2,410 |
| 1987-88 | 284 | 0.1 | 5.4 | 3,915 | Jan 17 | 4,360 |
| 1988-89 | 114 | 0.1 | 3.7 | 2,521 | Dec 21 | 507 |

M Data missing
* Record incomplete
E Estimate
N.D. Not determined
** Record not computed
\+ Less than 0.05 acre feet or less than 0.05 cfs, but greater than 0

# RUNOFF – STREAM GAGING STATION PEAK FLOW

## ARCADIA WASH below Grand Ave
## STATION NO. F317-R

| Season | Daily CFS | | | Total Runoff | Peak Flow | |
|---|---|---|---|---|---|---|
| | Maximum | Minimum | Mean | (Acre-feet) | Date | CFS |
| 1989-90 | 728 | 0.1 | 3.5 | 2,505 | Apr 17 | 1,330 |
| 1990-91 | 228 | 0.1 | 5 | 3,598 | Feb 28 | 2,120 |
| 1991-92 | 301 | 0.1 | 11.1 | 8,043 | Feb 12 | 3,190 |
| 1992-93 | 586 | 0.3 | 17.3 | 12,560 | Jan 17 | 2,720 |
| 1993-94 | 239 | 0 | 6.4 | 4,661 | Mar 19 | 1,360 |
| 1994-95 | 480 | 0.1 | 11.1 | 8,032 | Mar 11 | 2,740 |
| 1995-96 | 405 | 0.4 | 5.2 | 3,764 | Feb 20 | 1,560 |
| 1996-97 | 206 | 0.5 | 6.3 | 4,540 | Jan 26 | 1,430 |
| 1997-98 | 489 | 0.6 | 13.3 | 9,640 | Feb 06 | 2,850 |
| 1998-99 | 151 | 0.5 | 4.2 | 3,020 | Jan 26 | 1,040 |
| 1999-00 | 162 | 0.1 | 4.3 | 3,150 | Feb 21 | 1,750 |
| 2000-01 | 240 | 0.2 | 6 | 4,320 | Jan 11 | 1,380 |
| 2001-02 | 161 | 0.6 | 2.6 | 1,904 | Nov 24 | 2,712 |
| 2002-03 | 0 | 0 | 6.5 | 0 | Mar 15 | 2,120 |
| 2003-04 | 320 | 0.5 | 4.5 | 3,272 | Feb 26 | 2,660 |
| 2004-05 | 558 | 0.3 | 16.6 | 12,000 | Oct 20 | 3,680 |
| 2005-06 | 230 | 0.1 | 5.8 | 4,170 | Jan 02 | 3,005 |
| 2006-07 | 116 | 0 | 2 | 1,446 | Feb 11 | 950 |
| 2007-08 | 381 | 0.1 | 7.5 | 5,449 | Jan 04 | 3,823 |
| 2008-09 | 186 | 0.2 | 4.4 | 3,200 | Feb 05 | 2,210 |
| 2009-10 | 275 | 0.1 | 6.5 | 4,720 | Jan 18 | 2,530 |
| 2010-11 | 384 | 0.4 | 8.86 | 6,420 | Dec 22 | 3,030 |
| 2011-12 | 126 | 0.35 | 3.47 | 2,520 | Apr 13 | 2,500 |
| 2012-13 | 78 | 0.23 | 3.11 | 2,250 | May 09 | 1,070 |
| 2013-14 | 239 | 0.32 | 2.26 | 1,630 | Feb 28 | 1,190 |
| 2014-15 | 161 | 0.06 | 3.26 | 2,360 | Dec 12 | 3,270 |
| 2015-16 | 283 | 0.07 | 3.07 | 2,230 | Jan 05 | 3,380 |
| 2016-17 | 275 | 0 | 6.37 | 4,610 | Feb 17 | 2,690 |
| 2017-18 | 170 | 0.01 | 2.59 | 1,870 | Mar 15 | 1,110 |
| 2018-19 | 297 | 0.01 | 7.15 | 5,170 | Feb 02 | 2,700 |
| 2019-20 | 190 | 0.45 | 5.68 | 4,120 | Apr 09 | 3,120 |

M Data missing
* Record incomplete
E Estimate
N.D. Not determined
** Record not computed
+ Less than 0.05 acre feet or less than 0.05 cfs, but greater than 0

# RUNOFF – STREAM GAGING STATION PEAK FLOW

## ARROYO SECO below Devil's Gate Dam
## STATION NO. F277-R

| Season | Daily CFS | | | Total Runoff (Acre-feet) | Peak Flow | |
|---|---|---|---|---|---|---|
| | Maximum | Minimum | Mean | | Date | CFS |
| 1942-43 | 3,190 | 0 | 33.4 | 23,896 | Jan 23 | 5,640 |
| 1943-44 | 965 | 0 | 12.4 | 8,316 | Feb 20 | 1,540 |
| 1944-45 | 187 | 0.1 | 3.7 | 2,560 | Mar 15 | 610 |
| 1945-46 | 272 | 0 | 2.2 | 1,599 | Dec 23 | 445 |
| 1946-47 | 410 | 0 | 5.7 | 4,148 | Dec 27 | 610 |
| 1947-48 | 2 | 0 | 0.1 | 52 | | 2 |
| 1948-49 | 1 | 0 | 0 | 18 | Jun 13 | 2 |
| 1949-50 | 21 | 0 | 0.1 | 70 | Nov 10 | 106 |
| 1950-51 | 0 | 0 | 0 | 1 | Sep 04 | 26 |
| 1951-52 | 788 | 0 | 15.5 | 11,462 | Jan 18 | 999 |
| 1952-53 | 12 | 0 | 0.1 | 77 | Jan 11 | 25 |
| 1953-54 | 70 | 0 | 0.9 | 622 | Jan 25 | 127 |
| 1954-55 | 2 | 0 | 0.3 | 195 | Apr 30 | 14 |
| 1955-56 | 327 | 0 | 2 | 1,473 | Jan 27 | 411 |
| 1956-57 | 6 | 0 | 0.3 | 234 | Oct 04 | 124 |
| 1957-58 | 351 | 0 | 10.9 | 7,648 | Feb 04 | 546 |
| 1958-59 | 129 | 0 | 0.7 | 482 | Feb 16 | 156 |
| 1959-60 | 2 | 0 | 0.4 | 261 | Jan 11 | 7 |
| 1960-61 | 70 | 0 | 0.6 | 435 | Nov 25 | 360 |
| 1961-62 | 544 | 0 | 7.4 | 5,004 | Feb 11 | 891 |
| 1962-63 | 12 | 0 | 0.5 | 372 | Jun 21 | 51 |
| 1963-64 | 41 | 0 | 0.4 | 308 | Jun 26 | 214 |
| 1964-65 | 28 | 0 | 0.4 | 313 | Jul 12 | 128 |
| 1965-66 | 1,683 | 0 | 18.5 | 13,337 | Nov 23 | 2,110 |
| 1966-67 | 858 | 0 | 9.4 | 6,903 | Dec 06 | 1,620 |
| 1967-68 | N.D. | | | | | |
| 1968-69 | N.D. | | | | | |
| 1969-70 | N.D. | | | | | |
| 1970-71 | N.D. | | | | | |
| 1971-72 | N.D. | | | | | |
| 1972-73 | N.D. | | | | | |
| 1973-74 | N.D. | | | | | |
| 1974-75 | 48 | 0 | 0.9 | 689 | Apr 01 | 1,225 |

M Data missing
* Record incomplete
E Estimate
N.D. Not determined
** Record not computed
\+ Less than 0.05 acre feet or less than 0.05 cfs, but greater than 0

# RUNOFF – STREAM GAGING STATION PEAK FLOW

## ARROYO SECO below Devil's Gate Dam
## STATION NO. F277-R

| Season | Daily CFS | | | Total Runoff | Peak Flow | |
|---|---|---|---|---|---|---|
| | Maximum | Minimum | Mean | (Acre-feet) | Date | CFS |
| 1975-76 | 281 | 0 | 1.8 | 1,289 | Sep 11 | 1,040 |
| 1976-77 | 175 | 0 | 2.9 | 2,094 | May 09 | 450 |
| 1977-78 | 1,670 | 0 | 43.9 | 31,799 | Mar 04 | 5,790 |
| 1978-79 | 177 | 0 | 6.5 | 4,692 | Feb 21 | 321 |
| 1979-80 | 3,156 | 0 | 41.1 | 28,630 | Feb 17 | 4,844 |
| 1980-81 | 84 | 0 | 3.1 | 2,266 | Mar 24 | 314 |
| 1981-82 | 934 | 0 | 9.1 | 6,620 | Mar 18 | 1,276 |
| 1982-83 | 2,700 | 0.1 | 37.4 | 27,063 | Mar 02 | 3,260 |
| 1983-84 | 100 | 0 | 1.5 | 1,075 | Dec 01 | 526 |
| 1984-85 | 250 | 0 | 2.4 | 1,754 | Dec 21 | 873 |
| 1985-86 | 109 | 0 | 4 | 2,877 | Mar 15 | 349 |
| 1986-87 | N.D. | | | | | |
| 1987-88 | 124 | 0 | 0 | 0 | | |
| 1988-89 | 52 | 0 | 1.5 | 1,042 | Feb 09 | 52 |
| 1989-90 | 12 | 0 | 72.4 | 285 | | |
| 1990-91 | 572 | 0 | 7 | 506 | | |
| 1991-92 | 3,530 | 0 | 44.6 | 32,380 | Feb 11 | 5,970 |
| 1992-93 | 403M | 1.3M | 8.8M | 3210.05M | | M |
| 1993-94 | 84 | 0.1 | 2.5 | 1,842 | Mar 23 | 1,330 |
| 1994-95 | 505 | 0 | 33.9 | 24,566 | Feb 13 | 691 |
| 1995-96 | 408 | 0 | 4.7 | 3,443 | Feb 21 | 477 |
| 1996-97 | 77 | 0 | 2.3 | 1,679 | Jan 15 | 362 |
| 1997-98 | 164 | 0 | 14 | 10116.63E | | N.D. |
| 1998-99 | 16E | 0 | 0.6 | 455.25E | | N.D. |
| 1999-00 | 325E | 0 | 4.3 | 3090E | | N.D. |
| 2000-01 | 620E | 0 | 16.2 | 11760E | | N.D. |
| 2004-05 | 8,110 | 0.4 | 185 | 125,000 | Jan 09 | 11,700 |
| 2005-06 | 826 | 2 | 15.4 | 11,140 | Feb 28 | 2,172 |
| 2006-07 | 209 | 0.1 | 6.6 | 4,768 | Feb 27 | 1,384 |
| 2007-08 | 658 | 0 | 18.4 | 13,359 | Jan 04 | 6,479 |
| 2008-09 | 292 | 0.07 | 3.69 | 2,670 | Oct 26 | 1,970 |
| 2009-10 | 1,140 | 0.1 | 23.9 | 17,320 | Jan 18 | 8,910 |
| 2010-11 | 1,860 | 0.46 | 57.5 | 41,660 | Dec 21 | 8,910 |

M Data missing
* Record incomplete
E Estimate
N.D. Not determined
** Record not computed
\+ Less than 0.05 acre feet or less than 0.05 cfs, but greater than 0

# RUNOFF – STREAM GAGING STATION PEAK FLOW

## ARROYO SECO below Devil's Gate Dam
## STATION NO. F277-R

| Season | Daily CFS | | | Total Runoff (Acre-feet) | Peak Flow | |
|---|---|---|---|---|---|---|
| | Maximum | Minimum | Mean | | Date | CFS |
| 2011-12 | 35 | 0.38 | 2.68 | 1,950 | Apr 18 | 479 |
| 2012-13 | 31 | 0 | 0.59 | 428 | Oct 11 | 546 |
| 2013-14 | 133 | 0 | 0.61 | 440 | Feb 28 | 298 |
| 2014-15 | 27 | 0 | 0.38 | 276 | Sep 15 | 200 |
| 2015-16 | 66 | 0 | 0.92 | 670 | Jan 08 | 417 |
| 2016-17 | 190 | 0 | 5.61 | 4,050 | Jan 22 | 749 |
| 2017-18 | 66 | 0 | 1.12 | 810 | Apr 26 | 748 |
| 2018-19 | 398 | 0 | 11.3 | 8,210 | Nov 29 | 3,850 |
| 2019-20 | 238 | 0 | 4.29 | 3,110 | Apr 09 | 454 |

M Data missing
* Record incomplete
E Estimate
N.D. Not determined
** Record not computed
+ Less than 0.05 acre feet or less than 0.05 cfs, but greater than 0

# RUNOFF – STREAM GAGING STATION PEAK FLOW

## BALLONA CREEK above Sawtelle Blvd
## STATION NO. F38C-R

| Season | Daily CFS | | | Total Runoff | Peak Flow | |
|---|---|---|---|---|---|---|
| | Maximum | Minimum | Mean | (Acre-feet) | Date | CFS |
| 1927-28 | N.D. | 0 | N.D. | 3,930 | May 08 | 1,100 |
| 1928-29 | 1,150 | 0 | 20.6 | 14,900 | Mar 10 | 4,990 |
| 1929-30 | 1,130 | 0 | 18.6 | 13,480 | Jan 11 | 4,460 |
| 1930-31 | 1,500 | 0 | 25.6 | 18,520 | Apr 26 | 6,280 |
| 1931-32 | 1,780 | 0 | 30 | 21,790 | Dec 28 | 6,130 |
| 1932-33 | 1,660 | 0 | 21.8 | 15,810 | Jan 19 | 7,000 |
| 1933-34 | 4,310 | 0 | 28.5 | 20,630 | Jan 01 | 11,300 |
| 1934-35 | 2,190 | 0 | 34.4 | 24,870 | Apr 08 | 11,200 |
| 1935-36 | 929 | 0 | 19.3 | 13,500 | Feb 12 | 8,070 |
| 1936-37 | 2,160 | 0 | 56.2 | 40,680 | Dec 30 | 8,940 |
| 1937-38 | 7,330 | 3.6 | 72.5 | 52,500 | Mar 02 | 19,000 |
| 1938-39 | 3,080 | 1.8 | 39.4 | 28,490 | Dec 17 | 9,900 |
| 1939-40 | 1,270 | 1.3 | 29.1 | 21,110 | Feb 03 | 9,730 |
| 1940-41 | 2,680 | 3.1 | 93 | 67,360 | Dec 23 | 17,300 |
| 1941-42 | 990 | 2.8 | 23.8 | 17,250 | Dec 10 | 7,500 |
| 1942-43 | 4,840 | 2.6 | 47.3 | 34,240 | Jan 22 | 13,200 |
| 1943-44 | 3,010 | 3.4 | 45.4 | 33,000 | Feb 22 | 8,800 |
| 1944-45 | 1,200 | 3 | 33.8 | 24,450 | Nov 11 | 9,380 |
| 1945-46 | 1,830 | 3.8 | 25.4 | 18,380 | Dec 22 | 7,750 |
| 1946-47 | 1,960 | 2.8 | 36.3 | 26,300 | Dec 25 | 9,630 |
| 1947-48 | 1,000 | 3.5 | 18.8 | 13,630 | Mar 24 | 12,700 |
| 1948-49 | 668 | 2.8 | 22.2 | 16,090 | Feb 07 | 5,740 |
| 1949-50 | 1,620 | 1.4 | 32.1 | 23,250 | Feb 06 | 7,670 |
| 1950-51 | 756 | 0.7 | 26.1 | 18,860 | Jan 10 | 5,460 |
| 1951-52 | 2,520 | 3.5 | 73.5 | 53,350 | Jan 16 | 12,800 |
| 1952-53 | 1,140 | 4.8 | 27.5 | 19,910 | Nov 15 | 11,500 |
| 1953-54 | 3,570 | 5.4 | 39.3 | 28,480 | Feb 13 | 18,900 |
| 1954-55 | 1,210 | 5.4 | 29.8 | 21,600 | Jan 18 | 9,370 |
| 1955-56 | 6,510 | 5.2 | 44.7 | 34,590 | Jan 26 | 18,700 |
| 1956-57 | 1,790 | 6.3 | 30.7 | 22,240 | Feb 23 | 13,900 |
| 1957-58 | 3,000 | 6.3 | 59.4 | 43,040 | Feb 19 | 15,200 |
| 1958-59 | 1,210 | 4.2 | 19 | 13,730 | Jan 06 | 8,170 |

M Data missing
* Record incomplete
E Estimate
N.D. Not determined
** Record not computed
\+ Less than 0.05 acre feet or less than 0.05 cfs, but greater than 0

# RUNOFF – STREAM GAGING STATION PEAK FLOW

## BALLONA CREEK above Sawtelle Blvd
## STATION NO. F38C-R

| Season | Daily CFS | | | Total Runoff (Acre-feet) | Peak Flow | |
|---|---|---|---|---|---|---|
| | Maximum | Minimum | Mean | | Date | CFS |
| 1959-60 | 1,290 | 2.2 | 23.7 | 17,190 | Jan 11 | 12,500 |
| 1960-61 | 945 | 4.2 | 17.3 | 12,560 | Nov 05 | 7,700 |
| 1961-62 | 3,490 | 3.2 | 69.2 | 50,090 | Feb 19 | 12,900 |
| 1962-63 | 1,940 | 3.2 | 29.6 | 21,450 | Mar 16 | 12,100 |
| 1963-64 | 789 | 3.9 | 24.8 | 18,000 | Jan 22 | 6,420 |
| 1964-65 | 1,590 | 3.9 | 38 | 27,540 | Apr 09 | 17,600 |
| 1965-66 | 3,620 | 5.3 | 61.5 | 44,540 | Nov 22 | 18,000 |
| 1966-67 | 3,020 | 6.7 | 62.1 | 45,300 | Nov 07 | 13,900 |
| 1967-68 | 6,350 | 8.2 | 55.9 | 40,570 | Nov 21 | 32,500 |
| 1968-69 | 4,840 | 8.2 | 101 | 73,060 | Jan 25 | 17,000 |
| 1969-70 | 1,380 | 7.6 | 30.7 | 22,230 | Feb 28 | 1,380 |
| 1970-71 | 3,170 | 8.8 | 50.8 | 35,620 | Nov 29 | 14,600 |
| 1971-72 | 1,900 | 7.6 | 31.3 | 22,700 | Dec 24 | 11,100 |
| 1972-73 | 2,590 | 8.8 | 65.9 | 47,730 | Jan 16 | 17,600 |
| 1973-74 | 3,510 | 8.8 | 56.8 | 41,060 | Jan 07 | 11,000 |
| 1974-75 | 2,490 | 6.2 | 47.8 | 34,590 | Dec 04 | 20,560 |
| 1975-76 | 1,390 | 6.2 | 30.6 | 22,230 | Sep 10 | 12,940 |
| 1976-77 | 1,760 | 4.6 | 38.6 | 27,930 | Oct 23 | 10,173 |
| 1977-78 | 4,441 | 4.2 | 112.8 | 81,659 | Feb 10 | 28,088 |
| 1978-79 | 2,220 | 6.6 | 60.3 | 43,680 | Mar 27 | 9,710 |
| 1979-80 | 4,630 | 6.2 | 99.2 | 70,454 | Feb 15 | 27,000 |
| 1980-81 | 1,090 | 6.6 | 27.8 | 20,111 | Mar 02 | 7,300 |
| 1981-82 | 1,380 | 5.8 | 41.3 | 29,922 | Apr 01 | 8,110 |
| 1982-83 | 5,690 | 8.2 | 119 | 86,347 | Mar 01 | 23,100 |
| 1983-84 | 1,440 | 10 | 36.7 | 26,672 | | N.D. |
| 1984-85 | 1,810 | 8.2 | 38.3 | 27,714 | Feb 09 | 9,670 |
| 1985-86 | 2,750 | 8.8 | 67.7 | 49,043 | Feb 14 | 17,200 |
| 1986-87 | 752 | 7.6 | 19.4 | 13,986 | | N.D. |
| 1987-88 | 2,920 | 5 | 57.5 | 41,772 | Dec 04 | 13,400 |
| 1988-89 | 941 | 7.6 | 1.3 | 27,763 | Dec 17 | 3,580 |
| 1989-90 | 3,140 | 7.6 | 32.3 | 23,364 | Feb 17 | 8,090 |
| 1990-91 | 2,150 | 3 | 37.5 | 27,133 | Mar 19 | 10,800 |

M Data missing
* Record incomplete
E Estimate
N.D. Not determined
** Record not computed
\+ Less than 0.05 acre feet or less than 0.05 cfs, but greater than 0

# RUNOFF – STREAM GAGING STATION PEAK FLOW

## BALLONA CREEK above Sawtelle Blvd
## STATION NO. F38C-R

| Season | Daily CFS | | | Total Runoff (Acre-feet) | Peak Flow | |
|---|---|---|---|---|---|---|
| | Maximum | Minimum | Mean | | Date | CFS |
| 1991-92 | 2,490 | 7 | 62.3 | 45,191 | Feb 12 | 17,200 |
| 1992-93 | * | * | * | * | | * |
| 1993-94 | 1,450 | 9.7 | 38.9 | 28,150 | Feb 07 | 14,400 |
| 1994-95 | 4,680 | 9.4 | 103 | 74,450 | Mar 10 | 24,000 |
| 1995-96 | 2,930 | 12 | 53.4 | 38,740 | Jan 31 | 8,230 |
| 1996-97 | 1,830 | 9.7 | 54.8 | 39,670 | Dec 09 | 9,890 |
| 1997-98 | 3,040 | 8.3 | 111 | 80,630 | Feb 06 | 22,900 |
| 1998-99 | 1,260 | 10 | 41.7 | 30,160 | Jan 31 | 6,150 |
| 1999-00 | 1,690 | 7.8 | 61.2 | 44,450 | Feb 21 | 12,500 |
| 2000-01 | 2,540 | 7.9 | 86.4 | 62,520 | Jan 11 | 19,400 |
| 2001-02 | 1,128 | 9.8 | 36.9 | 26,698 | Nov 24 | 12,167 |
| 2002-03 | 4,058 | 7.6 | 76.1 | 55,088 | Mar 15 | 17,100 |
| 2003-04 | 2,042 | 8.2 | 49 | 35,411 | Feb 25 | 15,000 |
| 2004-05 | 5,230 | 16 | 182 | 132,000 | Dec 29 | 16,500 |
| 2005-06 | 2,300 | 22 | 89.8 | 65,010 | Jan 02 | 11,250 |
| 2006-07 | 919 | 18.7 | 47.5 | 34,377 | Sep 22 | 7,053 |
| 2007-08 | 2,570 | 4.3 | 110.2 | 80,006 | Jan 25 | 11,898 |
| 2008-09 | 2,130 | 1.1 | 40.8 | 29,570 | Nov 26 | 10,300 |
| 2009-10 | 2,520 | 3.5 | 55.2 | 39,980 | Jan 18 | 14,700 |
| 2010-11 | 3,670 | 4.01 | 75.9 | 54,970 | Dec 22 | 13,400 |
| 2011-12 | 1,400 | 2.28 | 34 | 24,680 | Nov 20 | 11,100 |
| 2012-13 | 917 | 4.66 | 26 | 18,810 | Mar 08 | 6,030 |
| 2013-14 | 2,560 | 4.48 | 29.8 | 21,560 | Feb 28 | 7,900 |
| 2014-15 | 2,080 | 1.6 | 33.6 | 24,340 | Sep 15 | 11,700 |
| 2015-16 | 1,700 | 0.67 | 26.8 | 19,460 | Jan 05 | 13,600 |
| 2016-17 | 2,500 | 0.2 | 57.4 | 41,560 | Jan 22 | 14,500 |
| 2017-18 | 1,570 | 2.72 | 23.1 | 16,740 | Mar 21 | 7,650 |
| 2018-19 | 2,630 | 4.21 | 77.4 | 56,000 | Feb 02 | 15,600 |
| 2019-20 | 1,320 | 2.72 | 48.3 | 35,080 | Dec 26 | 11,600 |

M Data missing
* Record incomplete
E Estimate
N.D. Not determined
** Record not computed
+ Less than 0.05 acre feet or less than 0.05 cfs, but greater than 0

# RUNOFF – STREAM GAGING STATION PEAK FLOW

## BIG DALTON CREEK below Big Dalton Dam
## STATION NO. F120B-R

| Season | Daily CFS | | | Total Runoff | Peak Flow | |
|---|---|---|---|---|---|---|
| | Maximum | Minimum | Mean | (Acre-feet) | Date | CFS |
| 1939-40 | 1 | 0 | 0.3 | 207 | | |
| 1940-41 | 66 | 0 | 4 | 2,889 | Mar 05 | 67 |
| 1941-42 | 3 | 0 | 0.3 | 235 | | |
| 1942-43 | 103 | 0 | 4.4 | 3,182 | Mar 04 | 111 |
| 1943-44 | 35 | 0 | 1.7 | 1,160 | Feb 23 | 56 |
| 1944-45 | 13 | 0 | 1.2 | 840 | Mar 15 | 34 |
| 1945-46 | 5 | 0 | 0.8 | 549 | Dec 23 | 34 |
| 1946-47 | 11 | 0 | 0.8 | 546 | Oct 03 | 30 |
| 1947-48 | 3 | 0 | 0 | 15 | Feb 05 | 20 |
| 1948-49 | 7 | 0 | 0.1 | 100 | Dec 18 | 25 |
| 1949-50 | 9 | 0 | 0.2 | 122 | Jan 21 | 11 |
| 1950-51 | 2 | 0 | 0 | 15 | Jan 11 | 10 |
| 1951-52 | 33 | 0 | 2.2 | 1,607 | Jan 19 | 34 |
| 1952-53 | 7 | 0 | 0.1 | 107 | Jan 15 | 38 |
| 1953-54 | 9 | 0 | 0.5 | 363 | Feb 15 | 9 |
| 1954-55 | 4 | 0 | 0 | 7 | Oct 01 | 7 |
| 1955-56 | 25 | 0 | 0.3 | 222 | Aug 08 | 37 |
| 1956-57 | 12 | 0 | 0 | 23 | Nov 09 | 18 |
| 1957-58 | 28 | 0 | 3 | 2,145 | Apr 05 | 37 |
| 1958-59 | 15 | 0 | 0.2 | 139 | Apr 13 | 31 |
| 1959-60 | 2 | 0 | 0 | 10 | Jul 21 | 5 |
| 1960-61 | 14 | 0 | 0.2 | 166 | Nov 14 | 37 |
| 1961-62 | 25 | 0 | 1.4 | 1,002 | Feb 17 | 25 |
| 1962-63 | 18 | 0 | 0.2 | 162 | Oct 08 | 35 |
| 1963-64 | 18 | 0 | 0.4 | 296 | Jan 22 | 2 |
| 1964-65 | 20 | 0 | 0.3 | 220 | Apr 26 | 20 |
| 1965-66 | 32 | 0 | 2.8 | 1,997 | Nov 22 | 52 |
| 1966-67 | 216 | 0 | 6.7 | 4,840 | Dec 06 | 615 |
| 1967-68 | N.D. | | | | | |
| 1968-69 | N.D. | | | | | |
| 1969-70 | N.D. | | | | | |
| 1970-71 | N.D. | | | | | |
| 1971-72 | N.D. | | | | | |

M Data missing
* Record incomplete
E Estimate
N.D. Not determined
** Record not computed
\+ Less than 0.05 acre feet or less than 0.05 cfs, but greater than 0

# RUNOFF – STREAM GAGING STATION PEAK FLOW

## BIG DALTON CREEK below Big Dalton Dam
## STATION NO. F120B-R

| Season | Daily CFS | | | Total Runoff (Acre-feet) | Peak Flow | |
|---|---|---|---|---|---|---|
| | Maximum | Minimum | Mean | | Date | CFS |
| 1972-73 | N.D. | | | | | |
| 1973-74 | N.D. | | | | | |
| 1974-75 | 11 | 0 | 0.4 | 296 | May 06 | 125 |
| 1975-76 | 13 | 0 | 0.7 | 488 | Jun 08 | 19 |
| 1976-77 | 1 | 0 | 0 | 21 | Apr 12 | 2 |
| 1977-78 | 226 | 0 | 0.3 | 6,186 | Mar 05 | 263 |
| 1978-79 | 17 | 0 | 0.1 | 1,735 | Apr 12 | 1,735 |
| 1979-80 | 564 | 0.1 | 0.3 | 7,436 | Feb 17 | 1,170 |
| 1980-81 | 5 | 0 | 0.5 | 361 | Jan 29 | 22 |
| 1981-82 | 22 | 0 | 1.2 | 903 | Mar 25 | 22 |
| 1982-83 | 268 | 0.1 | 7.6 | 5,466 | Mar 01 | 457 |
| 1983-84 | 7 | 0 | 0 | 705 | Dec 25 | 8 |
| 1984-85 | 8 | 0 | 0.8 | 585 | Dec 19 | 11 |
| 1985-86 | 16 | 0 | 1.2 | 855 | Mar 19 | 18 |
| 1986-87 | 5 | 0 | 0.2 | 214 | Jan 27 | 7 |
| 1987-88 | 8 | 0 | 0.6 | 444 | Sep 12 | 9 |
| 1988-89 | 10 | 0 | 0.5 | 364 | Feb 15 | 17 |
| 1989-90 | 5 | 0 | 0.1 | 69 | Jan 26 | 5 |
| 1990-91 | 11 | 0 | 0.6 | 455 | Mar 28 | 11 |
| 1991-92 | 20 | 0 | 1.6 | 1,161 | Feb 19 | 22 |
| 1992-93 | 311 | 0 | 9.9 | 7,136 | Jan 16 | 415 |
| 1993-94 | 10 | 0 | 0.4 | 296 | Apr 06 | 13 |
| 1994-95 | 99 | 0 | 5.7 | 3,814 | Feb 23 | 146 |
| 1995-96 | 28 | 0 | 1.7 | 1,251 | Feb 22 | 71 |
| 1996-97 | 18 | 0 | 1.5 | 1,100 | Jan 27 | 19 |
| 1997-98 | 183 | 0 | 6.5 | 4,700 | Feb 23 | 539 |
| 1998-99 | 459 | 0 | 2.7 | 1,970 | Oct 14 | 1,300 |
| 1999-00 | 10 | 0 | 0.3 | 241 | Mar 27 | 11 |
| 2000-01 | 10 | 0 | 0.4 | 320 | Sep 27 | 20 |
| 2001-02 | 1 | 0 | 0 | 27 | Dec 14 | 2 |
| 2002-03 | 15 | 0 | 0.8 | 565 | May 03 | 79 |
| 2003-04 | 16 | 0 | 0.9 | 626 | Mar 02 | 25 |
| 2004-05 | 467 | 0.1 | 10.2 | 7,350 | | |

M Data missing
* Record incomplete
E Estimate
N.D. Not determined
** Record not computed
\+ Less than 0.05 acre feet or less than 0.05 cfs, but greater than 0

# RUNOFF – STREAM GAGING STATION PEAK FLOW

## BIG DALTON CREEK below Big Dalton Dam
## STATION NO. F120B-R

| Season | Daily CFS | | | Total Runoff (Acre-feet) | Peak Flow | |
|---|---|---|---|---|---|---|
| | Maximum | Minimum | Mean | | Date | CFS |
| 2005-06 | 13 | 0.1 | 1.9 | 1,380 | Dec 07 | 146 |
| 2006-07 | 13 | 1.1 | 0.1 | 823 | Oct 19 | 314 |
| 2007-08 | 21 | 0 | 0.7 | 495 | Jun 11 | 127 |
| 2008-09 | 6 | 0 | 0.8 | 601 | Feb 06 | 16 |
| 2009-10 | 3 | 0 | 0.6 | 418 | Nov 10 | 32 |
| 2010-11 | 63 | 0 | 2.83 | 2,050 | Apr 14 | 450 |
| 2011-12 | 10 | 0 | 0.85 | 614 | Oct 19 | 421 |
| 2012-13 | 10 | 0 | 0.26 | 191 | Apr 23 | 52 |
| 2013-14 | 3.97 | 0 | 0.089 | 64 | Jul 31 | 9.35 |
| 2014-15 | 1.94 | 0 | 0.069 | 50 | Apr 30 | 3.63 |
| 2015-16 | 4.5 | 0 | 0.74 | 535 | Apr 14 | 104 |
| 2016-17 | 18.8 | 0 | 1.23 | 889 | Apr 11 | 303 |
| 2017-18 | 10.2 | 0 | 0.19 | 141 | Apr 18 | 79 |
| 2018-19 | 18.6 | 0 | 2.03 | 1470 | May 01 | 211 |
| 2019-20 | 12.3 | 0 | 0.86 | 623 | Apr 18 | 14.5 |

M Data missing
* Record incomplete
E Estimate
N.D. Not determined
** Record not computed
+ Less than 0.05 acre feet or less than 0.05 cfs, but greater than 0

# RUNOFF – STREAM GAGING STATION PEAK FLOW

## BIG ROCK CREEK upstream from Pallett Creek
## STATION NO. F394-R

| Season | Daily CFS | | | Total Runoff | Peak Flow | |
|---|---|---|---|---|---|---|
| | Maximum | Minimum | Mean | (Acre-feet) | Date | CFS |
| 1986-87 | 39 | 0.1 | 4.2 | 3,065 | Mar 06 | 45 |
| 1987-88 | 83 | 0 | 8.8 | 6,422 | | |
| 1988-89 | 13 | 2 | 4.7 | 3,547 | | |
| 1989-90 | 4 | 0.3 | 2 | 1,323 | | |
| 1990-91 | 27 | 0 | 4.1 | 4,003 | | |
| 1991-92 | 95 | 1.2 | 24.6 | 17,880 | Feb 11 | 93 |
| 1992-93* | 151 | 8.5 | 55.9 | 28,729 | | |
| 1993-94* | 28 | 3.3 | 10.3 | 6,828 | | |
| 1994-95* | 4,500 | 2.6 | 57.3 | 36,513 | | |
| 1995-96 | 1,510 | 2.1 | 15.6 | 11,297 | Feb 21 | 6,020 |
| 1996-97* | 204 | 0.7 | 7.2 | 5,187 | Dec 09 | 2,750 |
| 1997-98 | 2,900 | 0.5 | 48.6 | 35,210 | Feb 23 | 13,900 |
| 1998-99 | 18 | 1 | 4.4 | 3,190 | Nov 28 | 57 |
| 1999-00* | 330 | 0.5 | 3.9 | 2,854 | Feb 20 | 3,450 |
| 2000-01 | 36 | 0.9 | 9 | 6,540 | Jan 11 | 68 |
| 2001-02 | 1 | 0.1 | 0.3 | | Sep 04 | 1 |
| 2002-03 | 0 | 0 | 8.3 | 0 | Feb 12 | 1,230 |
| 2003-04 | 105 | 104 | 4.9 | 3,580 | Feb 26 | 410 |
| 2004-05 | 1,600 | 2 | 93.7 | 67,670 | Jan 09 | 2,800 |
| 2005-06 | 195 | 5.8 | 21.9 | 10,950 | Feb 28 | 549 |
| 2006-07 | 11 | 0.7 | 5.2 | 3,730 | Oct 18 | 17 |
| 2007-08 | 386 | 0.5 | 9.3 | 6,761 | Jan 27 | 742 |
| 2008-09 | 73 | 0.07 | 7.8 | 5,630 | Feb 19 | 120 |
| 2009-10 | 99 | 0.96 | 14.6 | 10,560 | Jan 18 | 287 |
| 2010-11 | 711 | 1.51 | 40.6 | 29,410 | Dec 20 | 1,770 |
| 2011-12 | 20 | 0.81 | 7.4 | 5,370 | Sep 09 | 106 |
| 2012-13 | 8 | 0.16 | 1.4 | 1,010 | Dec 02 | 10 |
| 2013-14 | 235 | 0 | 1.88 | 1,360 | Feb 28 | 1,080 |
| 2014-15 | 70 | 0 | 2.01 | 1,450 | Dec 12 | 306 |
| 2015-16 | 67 | 0 | 3.72 | 2,700 | Jan 31 | 319 |
| 2016-17 | 321 | 0 | 15.5 | 11,230 | Jan 22 | 938 |
| 2017-18 | 76 | 0.58 | 3.03 | 2,190 | Mar 22 | 434 |
| 2018-19 | 476 | 0.23 | 27.9 | 20,180 | Feb 14 | 1,080 |

M Data missing
* Record incomplete
E Estimate
N.D. Not determined
** Record not computed
+ Less than 0.05 acre feet or less than 0.05 cfs, but greater than 0

# RUNOFF – STREAM GAGING STATION PEAK FLOW

**BIG ROCK CREEK upstream from Pallett Creek**
**STATION NO. F394-R**

| Season | Daily CFS | | | Total Runoff (Acre-feet) | Peak Flow | |
|---|---|---|---|---|---|---|
| | Maximum | Minimum | Mean | | Date | CFS |
| 2019-20 | 136 | 3.28 | 20.7 | 15,030 | Apr 06 | 278 |

M Data missing
* Record incomplete
E Estimate
N.D. Not determined
** Record not computed
+ Less than 0.05 acre feet or less than 0.05 cfs, but greater than 0

# RUNOFF – STREAM GAGING STATION PEAK FLOW

## BIG TUJUNGA CREEK below Big Tujunga Dam
## STATION NO. F168B-R

| Season | Daily CFS | | | Total Runoff (Acre-feet) | Peak Flow | |
|---|---|---|---|---|---|---|
| | Maximum | Minimum | Mean | | Date | CFS |
| 2012-13 | 35 | 0.09 | 4.07 | 2,950 | May 07 | 66 |
| 2013-14 | 18.1 | 1.16 | 3.25 | 2,350 | Feb 28 | 54 |
| 2014-15 | 7.77 | 1.02 | 1.93 | 1,400 | Jul 19 | 96.7 |
| 2015-16 | 6.37 | 1.28 | 2.21 | 1,610 | Jan 31 | 41.5 |
| 2016-17 | 217 | 0 | 17.9 | 12,960 | Jan 23 | 719 |
| 2017-18 | 8.07 | 0 | 1.94 | 1,410 | Oct 05 | 26.3 |
| 2018-19 | 363 | 0 | 37.1 | 26,880 | Feb 03 | 742 |
| 2019-20 | 225 | 0 | 10.1 | 7,300 | Apr 15 | 241 |

M Data missing
* Record incomplete
E Estimate
N.D. Not determined
** Record not computed
\+ Less than 0.05 acre feet or less than 0.05 cfs, but greater than 0

# RUNOFF – STREAM GAGING STATION PEAK FLOW

## BOUQUET CREEK above Bouquet Canyon Road
## STATION NO. F377B-R

| Season | Daily CFS | | | Total Runoff (Acre-feet) | Peak Flow | |
|---|---|---|---|---|---|---|
| | Maximum | Minimum | Mean | | Date | CFS |
| 2003-04 | 44 | 0 | 0.5 | 356 | Feb 25 | 329 |
| 2004-05 | 1,050 | 0 | 12.1 | 8,760 | Jan 10 | 3,330 |
| 2005-06 | 95 | 0 | 1.3 | 846 | Jan 02 | 800 |
| 2006-07 | 9 | 0 | 3.1 | 68 | Sep 22 | 141 |
| 2007-08 | 168 | 0 | 1.6 | 1,125 | Feb 10 | 753 |
| 2008-09 | 30 | 0 | 0.7 | 498 | Apr 17 | 51 |
| 2009-10 | 36 | 0 | 0.53 | 386 | Apr 11 | 247 |
| 2010-11 | 299 | 0 | 1.5 | 1,080 | Apr 12 | 1,510 |
| 2011-12 | 50 | 0 | 0.37 | 271 | Apr 13 | 816 |
| 2012-13 | 8 | 0 | 0.043 | 31 | Jan 24 | 83 |
| 2013-14 | 76.2 | 0 | 0.34 | 248 | Feb 28 | 719 |
| 2014-15 | 54.7 | 0 | 0.54 | 393 | Dec 12 | 1,510 |
| 2015-16 | 36 | 0 | 0.37 | 266 | Jan 06 | 649 |
| 2016-17 | 198 | 0 | 1.63 | 1,180 | Feb 17 | 980 |
| 2017-18 | 53.2 | 0 | 0.49 | 352 | Mar 21 | 454 |
| 2018-19 | 67.7 | 0 | 1.49 | 1,080 | Jan 17 | 719 |
| 2019-20 | 63.5 | 0 | 0.88 | 637 | Dec 04 | 719 |

M Data missing
* Record incomplete
E Estimate
N.D. Not determined
** Record not computed
+ Less than 0.05 acre feet or less than 0.05 cfs, but greater than 0

# RUNOFF – STREAM GAGING STATION PEAK FLOW

## BRADBURY CHANNEL below Central Avenue
## STATION NO. F329-R

| Season | Daily CFS | | | Total Runoff (Acre-feet) | Peak Flow | |
|---|---|---|---|---|---|---|
| | Maximum | Minimum | Mean | | Date | CFS |
| 1957-58 | 7.3 | 0 | 0.2 | 170 | Feb 19 | 65 |
| 1958-59 | 29 | 0 | 0.3 | 182 | Jan 06 | 1250 |
| 1959-60 | 5.2 | 0 | 0.1 | 59 | Dec 24 | 40 |
| 1960-61 | 4.5 | 0 | 0 | 30 | Nov 03 | 60 |
| 1961-62 | 50 | 0 | 0.7 | 518 | Jan 20 | 316 |
| 1962-63 | 9.4 | 0 | 0.2 | 120 | Feb 09 | 24 |
| 1963-64 | 5.6 | 0 | 0.2 | 114 | Jan 22 | 168 |
| 1964-65 | 11 | 0 | 0.2 | 157 | Apr 09 | 248 |
| 1965-66 | 46 | 0 | 0.6 | 448 | Dec 29 | 552 |
| 1966-67 | 52 | 0 | 0.7 | 547 | Jan 24 | 280 |
| 1967-68 | 30 | 0 | 0.4 | 319 | Mar 08 | 370 |
| 1968-69 | 131 | 0 | 2.6 | 938 | Feb 06 | 472 |
| 1969-70 | 47 | 0 | 0.6 | 408 | Mar 01 | 267 |
| 1970-71 | 20 | 0 | 0.4 | 261 | Dec 21 | 130 |
| 1971-72 | 24 | 0 | 0.2 | 172 | Dec 24 | 145 |
| 1972-73 | 61 | 0 | 1.2 | 438 | Feb 27 | 424 |
| 1973-74 | 39 | 0 | 0.8 | 609 | Jan 07 | 111 |
| 1974-75 | 28 | 0 | 0.4 | 268 | Dec 04 | 325 |
| 1975-76 | 14 | + | 0.4 | 326 | Sep 11 | 210 |
| 1976-77 | 26.4 | + | 0.5 | 374 | Oct 23 | 166 |
| 1977-78 | 75.6 | + | 2.7 | 1670 | Feb 10 | 357 |
| 1978-79 | 49 | 0 | 1.6 | 1160 | Jan 15 | 297 |
| 1979-80 | 155 | 0 | 8.3 | 5984 | Jan 28 | 574 |
| 1980-81 | 29.7 | 0 | 1.1 | 781 | Jan 29 | 477 |
| 1981-82 | 41.2 | 0 | 1.2 | 870 | Mar 17 | 305 |
| 1982-83 | 111 | 0 | 2.4 | 1716 | Sep 29 | 422 |
| 1983-84 | 21.7 | 0 | 0.7 | 549 | Oct 01 | 230 |
| 1984-85 | 24.4 | 0 | 0.9 | 672 | | N.D. |
| 1985-86 | 34.8 | 0 | 0.8 | 581 | Jan 31 | 267 |
| 1986-87 | 5.7 | 0 | 0.5 | 361 | Jan 04 | 174 |
| 1987-88 | 166 | 0 | 2.8 | 2019 | Dec 04 | 286 |
| 1988-89 | 25.3 | 0 | 1.1 | 758 | Feb 04 | 119 |
| 1989-90 | 19.6 | 0.1 | 1.2 | 877 | May 28 | 20 |

M Data missing
* Record incomplete
E Estimate
N.D. Not determined
** Record not computed
\+ Less than 0.05 acre feet or less than 0.05 cfs, but greater than 0

# RUNOFF – STREAM GAGING STATION PEAK FLOW

## BRADBURY CHANNEL below Central Avenue
## STATION NO. F329-R

| Season | Daily CFS | | | Total Runoff | Peak Flow | |
|---|---|---|---|---|---|---|
| | Maximum | Minimum | Mean | (Acre-feet) | Date | CFS |
| 1990-91 | 44.6 | 0 | 1.8 | 1267 | Feb 27 | 391 |
| 1991-92 | 50.9 | 0 | 1.2 | 877 | Feb 12 | 334 |
| 1992-93 | 83.6 | 0 | 3.2 | 2310 | Jan 14 | 534 |
| 1993-94 | 14.6 | 0 | 0.6 | 470 | Mar 24 | 193 |
| 1994-95 | 82.7 | 0 | 2.3 | 1652 | Feb 14 | 170 |
| 1995-96 | 97.6 | 0 | 1.8 | 1283 | Feb 20 | 320 |
| 1996-97 | 28 | + | 1 | 708 | Nov 21 | 168 |
| 1997-98 | 71 | + | 1.5 | 1110 | Feb 07 | 400 |
| 1998-99 | 16 | + | 0.5 | 351 | Jan 26 | 170 |
| 1999-00 | 25 | + | 1.1 | 826 | Feb 20 | 297 |
| 2000-01 | 36 | + | 1.4 | 1000 | Jan 11 | 195 |
| 2001-02 | 18.4 | 0 | 0.3 | 221.4 | Nov 24 | 325 |
| 2002-03 | 41.4 | 0 | 0.8 | 546.4 | Feb 13 | 249 |
| 2003-04 | 1.8 | 0 | 0.4 | 8.7 | Feb 26 | 241 |
| 2004-05 | 135 | 0 | 4.2 | 3050 | Feb 21 | 470 |
| 2005-06 | 25 | 0 | 1.8 | 1320 | Apr 14 | 320 |
| 2006-07 | 10.9 | 0 | 0.5 | 354.3 | Sep 22 | 177 |
| 2007-08 | 43.4 | 0 | 0.8 | 593 | Jan 04 | 376 |
| 2008-09 | 20.3 | 0 | 0.55 | 396 | Feb 05 | 250 |
| 2009-10 | 27.8 | 0 | 0.95 | 691 | Jan 18 | 262 |
| 2010-11 | 48.6 | 0 | 0.99 | 715 | Dec 22 | 256 |
| 2011-12 | 10.2 | 0 | 0.38 | 279 | Feb 27 | 232 |
| 2012-13 | 4.93 | 0 | 0.18 | 133 | Oct 11 | 158 |
| 2013-14 | 22 | 0 | 0.19 | 135 | Feb 28 | 204 |
| 2014-15 | 16.9 | 0 | 0.26 | 185 | Jul 19 | 346 |
| 2015-16 | 15.2 | 0 | 0.23 | 168 | May 06 | 277 |
| 2016-17 | 22 | 0 | 0.58 | 420 | Dec 16 | 212 |
| 2017-18 | 20.9 | 0 | 0.18 | 127 | Jan 09 | 195 |
| 2018-19 | 61.5 | 0 | 1.6 | 1160 | Jan 17 | 282 |
| 2019-20 | 24.3 | 0 | 0.4 | 287 | Apr 06 | 413 |

M Data missing
* Record incomplete
E Estimate
N.D. Not determined
** Record not computed
\+ Less than 0.05 acre feet or less than 0.05 cfs, but greater than 0

# RUNOFF – STREAM GAGING STATION PEAK FLOW

## BRANFORD STREET CHANNEL below Sharp Avenue
## STATION NO. F342-R

| Season | Daily CFS | | | Total Runoff (Acre-feet) | Peak Flow | |
|---|---|---|---|---|---|---|
| | Maximum | Minimum | Mean | | Date | CFS |
| 1961-62 | 118 | 0 | 1.0* | 743* | Feb 19 | 206 |
| 1962-63 | 46 | 0 | 0.6 | 415 | Apr 26 | 284 |
| 1963-64 | 32 | 0 | 0.5 | 375 | Mar 22 | 275 |
| 1964-65 | 56 | 0 | 0.8 | 571 | Apr 09 | 261 |
| 1965-66 | 110 | 0 | 1.4 | 982 | Dec 29 | 587 |
| 1966-67 | 79 | 0 | 1.2 | 870 | Nov 07 | 445 |
| 1967-68 | 120 | 0 | 1 | 693 | Nov 21 | 576 |
| 1968-69 | 160 | 0 | 3 | 2,190 | Feb 25 | 738 |
| 1969-70 | 65 | 0 | 1 | 724 | Feb 09 | 462 |
| 1970-71 | 175* | 0 | 1.6* | 1,162* | Nov 29 | 990* |
| 1971-72 | 50 | 0 | 0.5 | 360 | Dec 24 | 233 |
| 1972-73 | 50 | 0 | 2.1 | 1,530 | Feb 11 | 771 |
| 1973-74 | 90 | 0 | 1 | 710 | Jan 07 | 412 |
| 1974-75 | 75 | + | 0.9 | 668 | Mar 06 | 882 |
| 1975-76 | 61 | 0 | 0.8 | 550 | Sep 10 | 742 |
| 1976-77 | 67 | 0 | 0.9 | 633 | May 09 | 490 |
| 1977-78 | 126 | 0 | 3 | 2,153 | Feb 10 | 1,160 |
| 1978-79 | 80 | 0 | 1.5 | 1,052 | Mar 27 | 823 |
| 1979-80 | 158 | 0 | 1.9 | 1,380 | Feb 19 | 1,530 |
| 1980-81 | 46 | 0 | 0.6 | 471 | Jan 29 | 683 |
| 1981-82 | 68 | 0 | 1.2 | 685 | Mar 17 | 688 |
| 1982-83 | 230 | 0 | 2.9 | 2,134 | Mar 01 | 1,520 |
| 1983-84 | 34 | 0 | 0.4 | 326 | Dec 25 | 190 |
| 1984-85 | 53 | 0 | 0.6 | 423 | Dec 18 | 800 |
| 1985-86 | 43 | 0 | 1.1 | 760 | Jan 31 | 728 |
| 1986-87 | 21 | 0 | 0.2 | 144 | Nov 17 | 386 |
| 1987-88 | 123 | 0 | 1.5 | 1,058 | Oct 22 | 1,830 |
| 1988-89 | 30 | 0 | 0.7 | 478 | Dec 20 | 242 |
| 1989-90 | 47 | 0 | 0.5 | 372 | Jan 13 | 383 |
| 1990-91 | 65 | 0 | 1 | 726 | | N.D. |
| 1991-92 | 238 | 0 | 2.8 | 2,001 | Feb 10 | 1,450 |
| 1992-93 | * | * | * | * | | * |
| 1993-94 | 35.3* | 0.0* | 0.7* | 464* | | N.D. |

M Data missing
* Record incomplete
E Estimate
N.D. Not determined
** Record not computed
+ Less than 0.05 acre feet or less than 0.05 cfs, but greater than 0

# RUNOFF – STREAM GAGING STATION PEAK FLOW

## BRANFORD STREET CHANNEL below Sharp Avenue
## STATION NO. F342-R

| Season | Daily CFS | | | Total Runoff (Acre-feet) | Peak Flow | |
|---|---|---|---|---|---|---|
| | Maximum | Minimum | Mean | | Date | CFS |
| 1994-95 | 175* | 0.0* | 3.0* | 2,076* | Mar 10 | 1,770 |
| 1995-96 | 68 | 0 | 0.9 | 652 | Feb 21 | 574 |
| 1996-97 | 56 | 0.1 | 1.3 | 917 | Dec 22 | 578 |
| 1997-98 | 124 | 0.1 | 3.4 | 2,470 | Feb 07 | 1,240 |
| 1998-99 | 19 | 0.1 | 1 | 717 | Oct 29 | 679 |
| 1999-00 | 63 | 0.1 | 1.6 | 1,130 | Apr 18 | 670 |
| 2000-01 | 95 | 0.2 | 2 | 1,470 | Jan 11 | 1,080 |
| 2001-02 | 39 | 0.2 | 0.7 | 520 | | |
| 2002-03 | 197 | 0.2 | 2.3 | 1,668 | Mar 15 | 1,270 |
| 2003-04 | 62 | 0.1 | 0.9 | 635 | Feb 26 | 586 |
| 2004-05 | 161 | 0.1 | 4.6 | 3,300 | Jan 09 | 1,550 |
| 2005-06 | 56 | 0.1 | 1.4 | 1,040 | Apr 04 | 398 |
| 2006-07 | 26 | 0 | 0.8 | 565 | Dec 09 | 462 |
| 2007-08 | 65 | 0.3 | 1.5 | 1,095 | Jan 27 | 486 |
| 2008-09 | 68 | 0.07 | 1.4 | 998 | Feb 06 | 574 |
| 2009-10 | 67 | 0.01 | 1.6 | 1,150 | Feb 06 | 683 |
| 2010-11 | 211 | 0 | 2.27 | 1,640 | Mar 20 | 850 |
| 2011-12 | 44 | 0.05 | 0.98 | 713 | Apr 13 | 881 |
| 2012-13 | 24 | 0 | 0.82 | 594 | Mar 08 | 239 |
| 2013-14 | 146 | 0.02 | 1.08 | 785 | Feb 28 | 1,010 |
| 2014-15 | 75 | 0 | 0.93 | 677 | Dec 12 | 554 |
| 2015-16 | 53 | 0.05 | 0.94 | 685 | Jan 06 | 701 |
| 2016-17 | 118 | 0 | 1.59 | 1,150 | Feb 17 | 832 |
| 2017-18 | 64 | 0.05 | 0.66 | 479 | Jan 09 | 598 |
| 2018-19 | 98 | 0.05 | 1.85 | 1,340 | Feb 02 | 1,070 |
| 2019-20 | 72 | 0.05 | 1.43 | 1,040 | Apr 06 | 841 |

M Data missing
* Record incomplete
E Estimate
N.D. Not determined
** Record not computed
\+ Less than 0.05 acre feet or less than 0.05 cfs, but greater than 0

# RUNOFF – STREAM GAGING STATION PEAK FLOW

## BURBANK WESTERN STORM DRAIN at Riverside Dr.
## STATION NO. E285-R

| Season | Daily CFS | | | Total Runoff (Acre-feet) | Peak Flow | |
|---|---|---|---|---|---|---|
| | Maximum | Minimum | Mean | | Date | CFS |
| 1950-51 | 50 | 1.2 | 4 | 2,870 | Jan 11 | 920 |
| 1951-52 | 310 | 1.2 | 8.9 | 6,490 | Jan 16 | 1,400 |
| 1952-53 | 89 | 0 | 4.7 | 3,400 | Dec 20 | 1,380 |
| 1953-54 | 144 | 2.1 | 5.7 | 4,140 | Mar 16 | 1,070 |
| 1954-55 | 123 | 1.2 | 5.6 | 4,020 | Jan 18 | 849 |
| 1955-56 | 400 | 2 | 5.6 | 4,070 | Jan 26 | N.D. |
| 1956-57 | 192 | 1.6 | 4.9 | 3,530 | Feb 23 | 1,770 |
| 1957-58 | 232 | 1.9 | 8.2 | 5,950 | Feb 19 | 1,270 |
| 1958-59 | 222 | 1.6 | 4.9 | 3,540 | Feb 11 | 1,650 |
| 1959-60 | 112 | 1.7 | 4.5 | 3,280 | Jan 10 | 854 |
| 1960-61 | 170 | 1.7 | 4.9 | 3,570 | Nov 05 | 1,400 |
| 1961-62 | 583 | 1.7 | 10.2 | 7,380 | Feb 12 | 2,310 |
| 1962-63 | 444 | 0.6 | 6.4 | 4,640 | Feb 09 | 1,800 |
| 1963-64 | 141 | 1.7 | 5.4 | 3,940 | Mar 22 | 1,220 |
| 1964-65 | 220 | 1.7 | 6.9 | 5,010 | Apr 01 | 2,570 |
| 1965-66 | 897 | 1.1 | 11.4 | 8,290 | Dec 29 | 2,980 |
| 1966-67 | 730 | 3.4 | 15.4 | 11,170 | Nov 07 | 3,500 |
| 1967-68 | 499 | 4.5 | 12.7 | 9,250 | Mar 08 | 2,640 |
| 1968-69 | 982 | 5 | 24.4 | 17,640 | Jan 25 | 2,830 |
| 1969-70 | 198 | 3.4 | 9.8 | 7,080 | Mar 04 | 1,500 |
| 1970-71 | 771 | 2.2 | 12.7 | 9,200 | Nov 29 | 4,600 |
| 1971-72 | 291 | 3.9 | 10.3 | 7,490 | Oct 24 | 1,650 |
| 1972-73 | 478 | 4.5 | 16.1 | 11,670 | Jan 18 | 3,130 |
| 1973-74 | 800 | 4.5 | 14.8 | 10,740 | Jan 07 | 1,860 |
| 1974-75 | 318 | 5 | 12.6 | 9,120 | Dec 04 | 2,370 |
| 1975-76 | 221 | 4.5 | 13 | 9,410 | Sep 05 | 3,030 |
| 1976-77 | 369 | 7.9 | 16.8 | 12,164 | Oct 23 | 2,880 |
| 1977-78 | 1,260 | 3.9 | 47.9 | 34,682 | Feb 10 | 12,300 |
| 1978-79 | 338 | 3.9 | 17.1 | 12,387 | Mar 17 | 2,620 |
| 1979-80 | 1,490 | 5 | 31.5 | 22,500 | Feb 16 | 7,560 |
| 1980-81 | 257 | 4.5 | 16.5 | 11,965 | Jan 29 | 4,340 |
| 1981-82 | 425 | 2.2 | 17.3 | 12,518 | Jan 19 | 3,010 |
| 1982-83 | 1,710 | 4.5 | 36.6 | 26,506 | Mar 01 | 6,320 |

M Data missing
* Record incomplete
E Estimate
N.D. Not determined
** Record not computed
\+ Less than 0.05 acre feet or less than 0.05 cfs, but greater than 0

# RUNOFF – STREAM GAGING STATION PEAK FLOW

## BURBANK WESTERN STORM DRAIN at Riverside Dr.
## STATION NO. E285-R

| Season | Daily CFS | | | Total Runoff | Peak Flow | |
|---|---|---|---|---|---|---|
| | Maximum | Minimum | Mean | (Acre-feet) | Date | CFS |
| 1983-84 | 231 | 2.8 | 9.8 | 7,083 | Nov 01 | 2,190 |
| 1984-85 | 363 | 1.1 | 9.6 | 6,981 | Dec 19 | 2,640 |
| 1985-86 | 372 | 2.8 | 14 | 10,104 | Jan 31 | 3,070 |
| 1986-87 | 145 | 1.7 | 8.3 | 5,843 | Nov 18 | 1,150 |
| 1987-88 | 363 | 7.9 | 19.4 | 14,058 | Oct 22 | 6,620 |
| 1988-89 | 194 | 4.4 | 12.5 | 9,071 | Dec 16 | 1,410 |
| 1989-90 | 253 | 4.1 | 10 | 7,258 | Feb 04 | 1,410 |
| 1990-91 | 376 | 1.2 | 10.7 | 8,085 | | N.D. |
| 1991-92 | 778 | 3 | 35.6 | 25,812 | Feb 10 | 7,220 |
| 1992-93 | 564 | 6 | 33.9 | 24,570 | Feb 07 | 8,080 |
| 1993-94 | 355 | 5.7 | 16.8 | 12,160 | Nov 30 | 5,600 |
| 1994-95 | 743 | 2.4 | 39.6 | 28,687 | Mar 10 | 6,880 |
| 1995-96 | 1,330 | 5.3 | 22 | 15,950 | Feb 21 | 5,270 |
| 1996-97 | 293 | 6.5 | 14.2 | 10,310 | Jan 20 | 2,400 |
| 1997-98 | 844 | 8.4 | 29.9 | 21,670 | Nov 26 | N.D. |
| 1998-99 | 175 | 7.3 | 15.1 | 10,920 | Nov 28 | 2,940 |
| 1999-00 | 279 | 6.2 | 16.3 | 11,840 | Nov 23 | 3,920 |
| 2000-01 | 417 | 6.6 | 20.9 | 15,120 | Jan 11 | 4,620 |
| 2001-02 | 175 | 4.6 | 12.8 | 9,255 | Nov 24 | 3,771 |
| 2002-03 | 846 | 6.9 | 18.5 | 13,388 | Mar 15 | 4,470 |
| 2003-04 | 396 | 1.6 | 1.3 | 9,338 | Feb 26 | 2,640 |
| 2004-05 | 765 | 7.6 | 45.3 | 32,800 | Feb 20 | 5,390 |
| 2005-06 | 478 | 7.2 | 21.9 | 15,830 | Jan 02 | 3,381 |
| 2006-07 | 174 | 8.9 | 18.9 | 13,669 | Sep 22 | 2,241 |
| 2007-08 | 516 | 5.6 | 25.9 | 18,770 | Jan 04 | 3,264 |
| 2008-09 | 331 | 4 | 13.7 | 9,900 | Feb 05 | 3,850 |
| 2009-10 | 530 | 1.7 | 20.6 | 14,920 | Feb 06 | 7,050 |
| 2010-11 | 1,180 | 7.49 | 38.6 | 27,980 | Dec 22 | 5,060 |
| 2011-12 | 333 | 4.09 | 15.1 | 10,960 | Mar 25 | 4,490 |
| 2012-13 | 203 | 6.73 | 16 | 11,580 | Mar 08 | 1,810 |
| 2013-14 | 454 | 4.01 | 12.4 | 9,010 | Feb 28 | 3,690 |
| 2014-15 | 233 | 1.16 | 12.2 | 8,760 | Dec 12 | 3,610 |
| 2015-16 | 341 | 0.23 | 12.4 | 9,040 | Jan 05 | 4,310 |

M Data missing
* Record incomplete
E Estimate
N.D. Not determined
** Record not computed
\+ Less than 0.05 acre feet or less than 0.05 cfs, but greater than 0

# RUNOFF – STREAM GAGING STATION PEAK FLOW

## BURBANK WESTERN STORM DRAIN at Riverside Dr.
## STATION NO. E285-R

| Season | Daily CFS | | | Total Runoff (Acre-feet) | Peak Flow | |
|---|---|---|---|---|---|---|
| | Maximum | Minimum | Mean | | Date | CFS |
| 2016-17 | 582 | 0 | 10.3 | 7,470 | Feb 17 | 5,150 |
| 2017-18 | 294 | 0.79 | 7.96 | 5,760 | Jan 09 | 3,560 |
| 2018-19 | 514 | 0 | 19.1 | 13,860 | Feb 02 | 6,470 |
| 2019-20 | 405 | 0 | 19.3 | 14,000 | Dec 26 | 2,000 |

M Data missing
* Record incomplete
E Estimate
N.D. Not determined
** Record not computed
+ Less than 0.05 acre feet or less than 0.05 cfs, but greater than 0

# RUNOFF – STREAM GAGING STATION PEAK FLOW

## COMPTON CREEK near Greenleaf Drive.
## STATION NO. F37B-R

| Season | Daily CFS | | | Total Runoff (Acre-feet) | Peak Flow | |
|---|---|---|---|---|---|---|
| | Maximum | Minimum | Mean | | Date | CFS |
| 1927-28 | * | 0 | * | 1230* | Mar 05 | 240* |
| 1928-29 | 197 | 0 | 3.1 | 2,270 | Mar 10 | 924 |
| 1929-30 | 144 | 0 | 3.5 | 2,520 | Mar 14 | 580 |
| 1930-31 | 137 | + | 3.3 | 2,400 | Apr 26 | 678 |
| 1931-32 | 248 | 0 | 4.4 | 3,220 | Jan 31 | 757 |
| 1932-33 | 166 | 0 | 2.4 | 1,780 | Jan 19 | 740 |
| 1933-34 | 372 | 0 | 3.5 | 2,560 | Jan 01 | 960 |
| 1934-35 | 301 | 0 | 5.7 | 4,170 | Apr 08 | 850 |
| 1935-36 | 143 | 0 | 4 | 2,920 | Feb 12 | 824 |
| 1936-37 | 559 | 0 | * | * | Feb 06 | 1,220 |
| 1937-38 | 986E | * | * | * | Mar 02 | N.D. |
| 1938-39 | 837 | 0 | 7.1 | 5,150 | Sep 25 | 2,150 |
| 1939-40 | 256 | 10 | 7.4 | 5,340 | Feb 03 | 1,630 |
| 1940-41 | 544 | 1 | 22.7 | 16,400 | Dec 23 | 2,660 |
| 1941-42 | 236 | 3 | 10.1 | 7,280 | Dec 10 | 1,730 |
| 1942-43 | 752 | 0.8 | 11.8 | 8,560 | Jan 22 | 2,050 |
| 1943-44 | 739 | 2.3 | 15.6 | 11,290 | Feb 20 | 2,370 |
| 1944-45 | 363 | 4.4 | 12.7 | 9,210 | Nov 11 | 3,010 |
| 1945-46 | 362 | 2.6 | 11 | 7,960 | Dec 23 | 2,010 |
| 1946-47 | 474 | 4.1 | 13.9 | 10,080 | Nov 12 | 2,930 |
| 1947-48 | 170 | 0.6 | 7.9 | 5,740 | Mar 24 | 1,410 |
| 1948-49 | 282 | 0.1 | 5.1 | 3,660 | Dec 17 | 2,710 |
| 1949-50 | 433 | + | 6.6 | 4,820 | Feb 06 | 2,830 |
| 1950-51 | 209 | + | 4.9 | 3,550 | Jan 10 | 1,790 |
| 1951-52 | 661 | 0.1 | 14.7 | 10,650 | Jan 18 | 3,220E |
| 1952-53 | 220 | 0.1 | 5.6 | 4,020 | Nov 15 | 2,380 |
| 1953-54 | 797 | 0.1 | 7.5 | 5,410 | Feb 13 | 3,600 |
| 1954-55 | 374 | 0.1 | 8.4 | 6,080 | Jan 18 | 2,710 |
| 1955-56 | 2,090 | 0.2 | 12.7 | 9,240 | Jan 26 | 4,910 |
| 1956-57 | 286 | + | 5.6 | 4,070 | May 11 | 1,780 |
| 1957-58 | 1,100 | + | 16 | 11,610 | Feb 19 | 4,640 |
| 1958-59 | 449 | 0 | 4.6 | 3,330 | Jan 06 | 4,320 |

M Data missing
* Record incomplete
E Estimate
N.D. Not determined
** Record not computed
+ Less than 0.05 acre feet or less than 0.05 cfs, but greater than 0

# RUNOFF – STREAM GAGING STATION PEAK FLOW

## COMPTON CREEK near Greenleaf Drive.
## STATION NO. F37B-R

| Season | Daily CFS | | | Total Runoff | Peak Flow | |
|---|---|---|---|---|---|---|
| | Maximum | Minimum | Mean | (Acre-feet) | Date | CFS |
| 1959-60 | 463 | 0 | 6.3 | 4,590 | Jan 11 | 3,220 |
| 1960-61 | 204 | + | 2.7 | 1,960 | Nov 05 | 1,640 |
| 1961-62 | 1,060 | 0.1 | 14.5 | 10,520 | Feb 19 | 4,550 |
| 1962-63 | 576 | + | 8.8 | 6,400 | Feb 10 | 3,310 |
| 1963-64 | 212 | + | 4.7 | 3,440 | Nov 06 | 2,430 |
| 1964-65 | 424 | 0 | 7.4 | 5,390 | Apr 09 | 2,630 |
| 1965-66 | 809 | + | 10.8 | 7,800 | Dec 29 | 3,250 |
| 1966-67 | 765 | + | 11.8 | 8,560 | Nov 07 | 4,650 |
| 1967-68 | 1,120 | + | 9.4 | 6,850 | Mar 07 | 3,690 |
| 1968-69 | 1,040 | 0 | 16.6 | 12,010 | Jan 20 | 5,890 |
| 1969-70 | 275 | 0.2 | 4.4 | 3,150 | Jan 16 | 1,960 |
| 1970-71 | 609 | 0.4 | 11.7 | 8,500 | Nov 29 | 2,930 |
| 1971-72 | 622 | 0.4 | 6.8 | 4,940 | Dec 27 | 6,000 |
| 1972-73 | 473 | 0.2 | 12.2 | 8,830 | Nov 14 | 4,300 |
| 1973-74 | 810 | 0.3 | 10 | 7,210 | Jan 04 | 3,140 |
| 1974-75 | 677 | 0.2 | 9.1 | 6,550 | Dec 04 | 8,690 |
| 1975-76 | 285 | 0.1 | 4.6 | 3,270 | Feb 09 | 2,470 |
| 1976-77 | 542 | 0 | 7.2 | 5,220 | Aug 17 | 1,970 |
| 1977-78 | 688 | 0 | 20 | 14,471 | Mar 01 | 3,620 |
| 1978-79 | 559 | + | 12.3 | 8,888 | Mar 27 | 2,410 |
| 1979-80 | * | * | * | * | Feb 16 | 4,780 |
| 1980-81 | 440 | 0.1 | 6.4 | 4,658 | Mar 01 | 2,970 |
| 1981-82 | 237 | 0.3 | 6.3E | 4,647E | Jan 01 | 2,720 |
| 1982-83 | 1,010 | 0.4 | 21.9 | 16,720 | Jan 28 | 6,020 |
| 1983-84 | 277 | 0.3 | 5.4 | 3,893 | Nov 24 | 2,380 |
| 1984-85 | 458 | 0.1 | 7.4 | 5,354 | Dec 19 | 4,110 |
| 1985-86 | * | * | * | * | | * |
| 1986-87 | 187 | 0.4 | 4 | 2,935 | Nov 17 | 1,670 |
| 1987-88 | 443 | 0.3 | 8 | 5,826 | Dec 04 | 2,980 |
| 1988-89 | 258 | 0.6 | 5.9 | 4,254 | Dec 21 | 1,990 |
| 1989-90 | 755 | 0.2 | 5.4 | 3,887 | Feb 17 | 2,500 |
| 1990-91 | 527 | 0.5 | 9.1 | 6,586 | Mar 19 | 3,940 |

M Data missing
* Record incomplete
E Estimate
N.D. Not determined
** Record not computed
+ Less than 0.05 acre feet or less than 0.05 cfs, but greater than 0

# RUNOFF – STREAM GAGING STATION PEAK FLOW

## COMPTON CREEK near Greenleaf Drive.
## STATION NO. F37B-R

| Season | Daily CFS | | | Total Runoff (Acre-feet) | Peak Flow | |
|---|---|---|---|---|---|---|
| | Maximum | Minimum | Mean | | Date | CFS |
| 1991-92 | 510 | 0.1 | 15.5 | 11,228 | Mar 20 | 4,640 |
| 1992-93 | 717 | 0.1 | 21.8 | 15,760 | Jan 06 | 5,240 |
| 1993-94 | 290 | 0.2 | 6 | 4,315 | Nov 30 | 2,680 |
| 1994-95 | 1,120 | 0 | 15.8 | 11,440 | Jan 04 | 7,660 |
| 1995-96 | 627 | 0.5 | 8 | 5,792 | Jan 31 | 3,410 |
| 1996-97 | 402 | 0.7 | 10.1 | 7,300 | Dec 09 | 2,510 |
| 1997-98 | 826 | 0.7 | 26.9 | 19,500 | Feb 06 | 7,040 |
| 1998-99 | 384 | 0.2 | 9 | 6,540 | Nov 08 | 2,420 |
| 1999-00 | 611 | 0 | 7.6 | 5,480 | Mar 05 | 6,150 |
| 2000-01 | 525 | 0 | 10.6 | 7,710 | Jan 11 | 3,250 |
| 2001-02 | 403 | 0 | 7.1 | 15,512 | Nov 24 | 2,519 |
| 2002-03 | 997 | 0 | 12.3 | 8,881 | Mar 15 | 4,750 |
| 2003-04 | 876 | 0 | 9.4 | 6,796 | Nov 12 | 8,030 |
| 2004-05 | 1,320 | 0 | 26.1 | 18,900 | Dec 28 | 5,530 |
| 2005-06 | 344 | 0.3 | 7.4 | 5,380 | Jan 02 | 3,407 |
| 2006-07 | 80 | 0 | 1.5 | 1,118 | Apr 20 | 857 |
| 2007-08 | 272 | 0 | 6.7 | 4,843 | Jan 23 | 1,888 |
| 2008-09 | 417 | 0 | 5.4 | 3,900 | Feb 16 | 3,360 |
| 2009-10 | 403 | 0 | 6.8 | 4,930 | Jan 20 | 3,670 |
| 2010-11 | 741 | 0 | 9.77 | 7,070 | Dec 22 | 2,870 |
| 2011-12 | 135 | 0 | 2.59 | 1,880 | Mar 25 | 2,100 |
| 2012-13 | 73 | 0 | 1.57 | 1,140 | Dec 26 | 345 |
| 2013-14 | 166 | 0 | 1.81 | 1,310 | Feb 28 | 530 |
| 2014-15 | 299 | 0 | 3.44 | 2,490 | Sep 15 | 3,300 |
| 2015-16 | 216 | 0 | 5.05 | 3,670 | Jan 05 | 2,870 |
| 2016-17 | 1,340 | 0 | 14.5 | 10,530 | Feb 17 | 6,560 |
| 2017-18 | 242 | 2.45 | 6.78 | 4,910 | Jan 09 | 1,430 |
| 2018-19 | 531 | 0.02 | 9.83 | 7,120 | Dec 06 | 2,390 |
| 2019-20 | 136 | 0 | 4.49 | 3,260 | Mar 13 | 398 |

M Data missing
* Record incomplete
E Estimate
N.D. Not determined
** Record not computed
\+ Less than 0.05 acre feet or less than 0.05 cfs, but greater than 0

# RUNOFF – STREAM GAGING STATION PEAK FLOW

## COYOTE CREEK below Spring Street.
## STATION NO. F354-R

| Season | Daily CFS | | | Total Runoff (Acre-feet) | Peak Flow | |
|---|---|---|---|---|---|---|
| | Maximum | Minimum | Mean | | Date | CFS |
| 1963-64 | 1,190 | + | 10.9 | 7,950 | Nov 15 | N.D. |
| 1964-65 | 800 | 0.3 | 16.9 | 12,220 | Apr 09 | 3,350 |
| 1965-66 | 1,830 | 1.2 | 32.5 | 23,500 | Dec 29 | 5,020 |
| 1966-67 | 1,840 | 1.4 | 37.9 | 27,450 | Jan 22 | 6,880 |
| 1967-68 | 2,350 | 1.6 | 26.8 | 19,570 | Mar 08 | 6,970 |
| 1968-69 | 4,420 | 3.1 | 88.8 | 64,290 | Jan 20 | 11,300 |
| 1969-70 | 1,000 | 2.5 | 23 | 16,680 | Feb 10 | 4,600 |
| 1970-71 | 2,320 | 1.4 | 32.9 | 23,820 | Dec 19 | 6,200 |
| 1971-72 | 1,770 | * | * | * | Dec 27 | 6,620 |
| 1972-73 | 2,350 | 3.3 | 60.4 | 43,720 | Nov 14 | 7,810 |
| 1973-74 | 2,410 | 2.3 | 38.3 | 27,700 | Jan 07 | 8,670 |
| 1974-75 | 3,130 | 2.3 | 36.9 | 26,700 | Dec 04 | 14,400 |
| 1975-76 | 1,500 | 2.3 | 24.5 | 17,540 | Feb 06 | 5,430 |
| 1976-77 | 4,250 | 1.7 | 37.5 | 27,000 | May 08 | 13,400 |
| 1977-78 | 4,400 | 1.5 | 128.4 | 92,940 | Mar 01 | 13,700 |
| 1978-79 | * | * | * | * | | * |
| 1979-80 | 4,380 | 4 | 128.4 | 91,800 | Feb 14 | 19,400 |
| 1980-81 | 2,030 | 4.9 | 33.7 | 24,395 | Mar 01 | 7,980 |
| 1981-82 | 4,020 | 4.6 | 56.2 | 40,818 | Nov 28 | 12,200 |
| 1982-83 | 5,100 | 3.4 | 123 | 89,013 | Mar 01 | 19,700 |
| 1983-84 | 2,670 | 5.2 | 1.5 | 32,043 | Oct 01 | 9,620 |
| 1984-85 | * | * | * | * | | * |
| 1985-86 | * | * | * | * | Feb 14 | * |
| 1986-87 | 2,980 | 4.9 | 34.1 | 24,670 | Jan 04 | 11,100 |
| 1987-88 | 2,940 | 3.1 | 46.8 | 33,943 | Dec 04 | 7,630 |
| 1988-89 | 1,360 | 3 | 45 | 32,582 | | N.D. |
| 1989-90 | 648 | 2.3 | 18.5 | 13,410 | Jan 16 | 2,980 |
| 1990-91 | 2,250 | 3.4 | 49.7 | 35,630 | Mar 01 | 6,250 |
| 1991-92 | 3,120 | 0 | 61.3 | 44,518 | Feb 12 | 21,000 |
| 1992-93 | 5,030 | 3.8 | 147 | 106,400 | Dec 07 | 13,600 |
| 1993-94 | M | M | M | M | | M |
| 1994-95 | * | * | * | * | Mar 11 | 11,500 |
| 1995-96 | 2,990 | 2.8 | 41.9 | 30,380 | Feb 20 | 15,500 |

M Data missing
* Record incomplete
E Estimate
N.D. Not determined
** Record not computed
+ Less than 0.05 acre feet or less than 0.05 cfs, but greater than 0

# RUNOFF – STREAM GAGING STATION PEAK FLOW

## COYOTE CREEK below Spring Street.
## STATION NO. F354-R

| Season | Daily CFS | | | Total Runoff (Acre-feet) | Peak Flow | |
|---|---|---|---|---|---|---|
| | Maximum | Minimum | Mean | | Date | CFS |
| 1996-97 | 2,120 | 3.5 | 72 | 52,160 | Dec 09 | 10,100 |
| 1997-98 | 3,370 | 1.5 | 135 | 97,460 | Feb 07 | 13,800 |
| 1998-99 | 748 | 3 | 35.7 | 25,830 | Nov 08 | 4,570 |
| 1999-00 | 1,180 | 3.9 | 33.7 | 24,430 | Feb 23 | 5,100 |
| 2000-01 | 3,030E | 3.6E | 71.2E | 51,510E | Jan 11 | 15,300 |
| 2001-02 | 921 | 2 | 33 | 17,758 | Dec 21 | 2,371 |
| 2002-03 | 3,907 | 2.9 | 116 | 84,197 | Dec 16 | 16,200 |
| 2003-04 | 3,337 | 6.3 | 70 | 50,590 | Feb 26 | 11,600 |
| 2004-05 | 8,730 | 8.7 | 415 | 30,000 | Jan 09 | 20,800 |
| 2005-06 | 2,240 | 0 | 90.3 | 65,350 | Mar 28 | 9,862 |
| 2006-07 | 1,040 | 1.2 | 27.4 | 19,802 | Sep 22 | 3,707 |
| 2007-08 | 1,560 | 1.9 | 66.2 | 48,031 | Jan 05 | 6,642 |
| 2008-09 | 2,510 | 1.2 | 43.4 | 31,440 | Dec 15 | 14,000 |
| 2009-10 | 1,020 | 0.1 | 20 | 14,520 | Apr 12 | 6,610 |
| 2010-11 | 3,870 | 7.55 | 112 | 80,800 | Dec 22 | 15,600 |
| 2011-12 | 1,090 | 5.89 | 55 | 39,930 | Apr 13 | 7,310 |
| 2012-13 | 1,200 | 5.02 | 49 | 35,450 | Dec 24 | 4,990 |
| 2013-14 | 2,230 | 1.3 | 49.5 | 35,830 | Feb 28 | 6,350 |
| 2014-15 | 1,710 | 0.16 | 35.5 | 25,700 | Sep 15 | 7,940 |
| 2015-16 | 1,190 | 1.63 | 31 | 22,520 | Jan 05 | 5,780 |
| 2016-17 | 4,160 | 0.13 | 87.5 | 63,340 | Jan 22 | 20,100 |
| 2017-18 | 1,740 | 0.51 | 15.2 | 11,010 | Jan 09 | 7,100 |
| 2018-19 | 4,380 | 0.17 | 64.7 | 46,850 | Feb 02 | 14,200 |
| 2019-20 | 2,920 | 1.51 | 67.1 | 48,710 | Dec 26 | 12,700 |

M Data missing
* Record incomplete
E Estimate
N.D. Not determined
** Record not computed
+ Less than 0.05 acre feet or less than 0.05 cfs, but greater than 0

# RUNOFF – STREAM GAGING STATION PEAK FLOW

## DALTON WASH at Merced Avenue
## STATION NO. F274B-R

| Season | Daily CFS | | | Total Runoff (Acre-feet) | Peak Flow | |
|---|---|---|---|---|---|---|
| | Maximum | Minimum | Mean | | Date | CFS |
| 1940-41 | 206 | 0 | 5.3 | 3,844 | Mar 13 | 674 |
| 1941-42 | 42 | 0 | 1 | 727 | Dec 10 | 230 |
| 1942-43 | 336 | 0 | 4.8 | 3,500 | Jan 22 | 1,230 |
| 1943-44 | 1,620 | 0 | 2.2 | 1,620 | Feb 22 | 2,650 |
| 1944-45 | 144 | 0 | 1.2 | 894 | Nov 11 | 1,740 |
| 1945-46 | 229 | 0 | 2.2 | 1,610 | Dec 23 | 1,450 |
| 1946-47 | 52 | 0 | 1.4 | 984 | Nov 23 | 328 |
| 1947-48 | 20 | 0 | 0.1 | 96 | Dec 05 | 149 |
| 1948-49 | 19 | 0 | 0.1 | 97 | Dec 17 | 181 |
| 1949-50 | 38 | 0 | 0.4 | 306 | Dec 18 | 232 |
| 1950-51 | 11 | 0 | 0.1 | 64 | Jan 11 | 175 |
| 1951-52 | 270 | 0 | 2.9 | 2,090 | Jan 16 | 1,070 |
| 1952-53 | 39 | 0 | 0.4 | 287 | Nov 15 | 549 |
| 1953-54 | 217 | 0 | 1.5 | 1,060 | Feb 13 | 1,290 |
| 1954-55 | 88 | 0 | 1 | 706 | Jan 18 | 668 |
| 1955-56 | 860 | 0 | 3.1 | 2,260 | Jan 26 | 2,350 |
| 1956-57 | 165 | 0 | 1.4 | 980 | Mar 01 | 1,990 |
| 1957-58 | 303 | 0 | 6.5 | 4,690 | Mar 16 | 1,310 |
| 1958-59 | 208 | 0 | 3 | 2,130 | Jan 06 | 2,700 |
| 1959-60 | 2,260 | 0.1 | 3.1 | 2,260 | Jan 10 | 1,000 |
| 1960-61 | 150 | 0.2 | 3.1 | 2,220 | Jan 26 | 1,468 |
| 1961-62 | 511 | 0.1 | 9.9 | 7,200 | Nov 20 | 4,270 |
| 1962-63 | 403 | 0.2 | 5.7 | 4,110 | Mar 16 | 2,020 |
| 1963-64 | 169 | 0.1 | 3.8 | 2,750 | Jan 21 | 1,530 |
| 1964-65 | 290 | 0.1 | 4.4 | 3,170 | Apr 09 | 2,800 |
| 1965-66 | 571 | 0.2 | 8.8 | 6,310 | Nov 22 | 1,320 |
| 1966-67 | 693 | 0.3 | 14 | 10,140 | Sep 01 | 3,970 |
| 1967-68 | 414 | 0.3 | 5.9 | 4,310 | Mar 08 | 3,254 |
| 1968-69 | 3,120 | 0.3 | 47 | 34,300 | Jan 25 | 6,550 |
| 1969-70 | 447 | 1.2 | 68 | 49,270 | Feb 01 | 4,775 |
| 1970-71 | 404 | 0.8 | 88 | 63,700 | Dec 21 | 2,320 |
| 1971-72 | 599 | 0.8 | 54 | 39,430 | Dec 24 | 3,570 |
| 1972-73 | 629 | 0.8 | 121 | 87,820 | Feb 02 | 4,240 |

M Data missing
* Record incomplete
E Estimate
N.D. Not determined
** Record not computed
\+ Less than 0.05 acre feet or less than 0.05 cfs, but greater than 0

# RUNOFF – STREAM GAGING STATION PEAK FLOW

## DALTON WASH at Merced Avenue
## STATION NO. F274B-R

| Season | Daily CFS | | | Total Runoff (Acre-feet) | Peak Flow | |
|---|---|---|---|---|---|---|
| | Maximum | Minimum | Mean | | Date | CFS |
| 1973-74 | 839 | 0.8 | 112 | 81,260 | Jan 04 | 2,140 |
| 1974-75 | 550 | 0.8 | 66.8 | 48,320 | Dec 04 | 5,060 |
| 1975-76 | 282 | 0.8 | 74.1 | 53,640 | Sep 10 | 2,190 |
| 1976-77 | 210 | 1 | 14.2 | 10,280 | Jan 03 | 3,240 |
| 1977-78 | * | * | * | * | Mar 05 | * |
| 1978-79 | 582 | 0.1 | 101.6 | 73,533 | Mar 27 | 5,610 |
| 1979-80 | 2,790 | + | 83.4 | 59,890 | Feb 16 | 10,000 |
| 1980-81 | 379 | 1 | 21.9 | 15,861 | Mar 01 | 1,830 |
| 1981-82 | 568 | 0.6 | 53.4 | 38,651 | Mar 14 | 3,750 |
| 1982-83 | 1,690 | 0 | 52.2 | 37,757 | Feb 27 | 6,130 |
| 1983-84 | 347 | 0 | 40.2 | 28,405 | Dec 25 | 3,360 |
| 1984-85 | 322 | 0.1 | 57.6 | 41,683 | Nov 08 | 3,500 |
| 1985-86 | 496 | 0.1 | 39.1 | 28,298 | Mar 08 | 5,550 |
| 1986-87 | 347 | 0 | 65.7 | 46,865 | Oct 02 | 2,980 |
| 1987-88 | 421 | 0.1 | 47.9 | 34,807 | Dec 04 | 4,984 |
| 1988-89 | 286 | 1.3 | 60 | 43,310 | Dec 21 | 3,408 |
| 1989-90 | 151 | 8 | 56 | 39,890 | Apr 17 | 5,390 |
| 1990-91 | 593 | 0 | 18.1 | 13,700 | Mar 01 | 3,288 |
| 1991-92 | 529 | 0.1 | 10 | 7,252 | Feb 12 | 5,270 |
| 1992-93 | 790 | 0 | 37.8 | 27,370 | Jan 14 | 6,120 |
| 1993-94 | 169 | 0.1 | 6.2 | 4,470 | Apr 26 | 3,390 |
| 1994-95 | 1,070 | 0.1 | 19.6 | 14,160 | Jan 10 | 4,790 |
| 1995-96 | 925 | 0.2 | 13.7 | 9,920 | Feb 18 | 6,760 |
| 1996-97 | 370 | 0.1 | 30.2 | 21,890 | Dec 09 | 3,130 |
| 1997-98 | 1,070 | 0.1 | 22.4 | 16,220 | Feb 07 | 6,630 |
| 1998-99 | 127 | 0.1 | 7.2 | 5,240 | Nov 28 | 2,820 |
| 1999-00 | 291 | 0.1 | 28.3 | 20,520 | Feb 12 | 3,040 |
| 2000-01 | 408 | 0.1 | 22.1 | 16,030 | Jan 11 | 2,280 |
| 2001-02 | 282 | 0 | 29.6 | 21,371 | Dec 20 | 2,556 |
| 2002-03 | 941 | 0.2 | 33.7 | 24,370 | Dec 16 | 4,040 |
| 2003-04 | 552 | 0.1 | 29 | 21,158 | Apr 01 | 3,410 |
| 2004-05 | 3,430 | 0.1 | 76.9 | 55,700 | Oct 20 | 10,700 |
| 2005-06 | 402 | 0.1 | 17.2 | 12,460 | Jan 02 | 5,535 |

M Data missing
* Record incomplete
E Estimate
N.D. Not determined
** Record not computed
+ Less than 0.05 acre feet or less than 0.05 cfs, but greater than 0

# RUNOFF – STREAM GAGING STATION PEAK FLOW

## DALTON WASH at Merced Avenue
## STATION NO. F274B-R

| Season | Daily CFS | | | Total Runoff (Acre-feet) | Peak Flow | |
|---|---|---|---|---|---|---|
| | Maximum | Minimum | Mean | | Date | CFS |
| 2006-07 | 248 | 0 | 21.6 | 15,660 | Feb 11 | 2,524 |
| 2007-08 | 683 | 0.1 | 9.8 | 7,124 | Jan 05 | 7,406 |
| 2008-09 | 489 | 0.3 | 12.5 | 9,080 | Feb 05 | 5,020 |
| 2009-10 | 544 | 0.4 | 21.4 | 15,470 | Jan 18 | 5,170 |
| 2010-11 | 1,280 | 0.26 | 37.8 | 27,340 | Dec 22 | 7,770 |
| 2011-12 | 353 | 0.03 | 9.21 | 6,680 | Apr 13 | 5,120 |
| 2012-13 | 105 | 0.14 | 4.01 | 2,910 | Nov 30 | 817 |
| 2013-14 | 384 | 0.07 | 3.18 | 2,300 | Feb 28 | 3,300 |
| 2014-15 | 276 | 0.02 | 40 | 28,880 | Dec 12 | 5,120 |
| 2015-16 | 487 | 0 | 41.3 | 30,020 | Nov 03 | 5,270 |
| 2016-17 | 639 | 0 | 57.1 | 41,330 | Jan 20 | 7,330 |
| 2017-18 | 340 | 0.03 | 17.2 | 12,430 | Jan 09 | 4,570 |
| 2018-19 | 686 | 0.06 | 19.1 | 13,810 | Oct 12 | 5,210 |
| 2019-20 | 527 | 0.08 | 7.14 | 5,170 | Dec 04 | 3,910 |

M Data missing
* Record incomplete
E Estimate
N.D. Not determined
** Record not computed
+ Less than 0.05 acre feet or less than 0.05 cfs, but greater than 0

# RUNOFF – STREAM GAGING STATION PEAK FLOW

## EATON WASH at Loftus Drive.
## STATION NO. F318-R

| Season | Daily CFS | | | Total Runoff (Acre-feet) | Peak Flow | |
|---|---|---|---|---|---|---|
| | Maximum | Minimum | Mean | | Date | CFS |
| 1956-57 | 201 | 0 | 0 | 2,400 | Feb 23 | 1,760 |
| 1957-58 | 368 | 0.1 | 0.1 | 7,460 | Feb 19 | 2,700 |
| 1958-59 | 245 | 0.1 | 0.1 | 2,850 | Jan 06 | 3,480 |
| 1959-60 | 186 | + | + | 2,420 | Jan 12 | 1,090 |
| 1960-61 | 123 | 0.1 | 0.1 | 1,590 | Nov 26 | 1,200 |
| 1961-62 | 598 | 0.1 | 0.1 | 6,880 | Feb 11 | 1,950 |
| 1962-63 | 311 | 0.3 | 0.3 | 2,980 | Feb 09 | 1,230 |
| 1963-64 | 227 | 0.1 | 0.1 | 3,050 | Nov 20 | 2,360 |
| 1964-65 | 254 | 0.2 | 0.2 | 3,760 | Apr 09 | 2,150 |
| 1965-66 | 605 | 0.3 | 0.3 | 8,990 | Dec 29 | 2,290 |
| 1966-67 | 548 | 0.3 | 0.3 | 8,670 | Jan 24 | 2,100 |
| 1967-68 | 318 | 0.3 | 0.3 | 4,040 | Mar 08 | 2,390 |
| 1968-69 | 1,860 | 0.3 | 0.3 | M | | M |
| 1969-70 | M | M | M | M | | M |
| 1970-71 | M | M | M | M | | M |
| 1971-72 | M | M | M | M | | M |
| 1972-73 | M | M | M | M | | M |
| 1973-74 | 592 | 0.3 | 0.3 | 4,870 | Jan 07 | 1,530 |
| 1974-75 | 480 | 0.5 | 0.5 | 4,870 | Dec 04 | 3,000 |
| 1975-76 | 275 | 0.4 | 0.4 | 3,980 | Sep 11 | 2,660 |
| 1976-77 | 206 | 0.4 | 0.4 | 3,650 | Oct 23 | 1,820 |
| 1977-78 | 914 | 0.4 | 0.4 | 21,425 | Feb 10 | 5,810 |
| 1978-79 | 335 | 0.3 | 0.3 | 7,156 | Feb 21 | 2,630 |
| 1979-80 | 1,460 | 0.1 | 0.1 | 27,991 | Feb 16 | 5,240 |
| 1980-81 | 203 | 0.3 | 0.3 | 3,937 | Mar 19 | 1,630 |
| 1981-82 | 377 | 0.4 | 0.4 | 5,453 | Mar 17 | 3,060 |
| 1982-83 | 1,570 | 0.5 | 0.5 | 28,952 | | N.D. |
| 1983-84 | 191 | 0.4 | 0.4 | 3,307 | Dec 25 | 1,930 |
| 1984-85 | 199 | 0.4 | 0.4 | 4,258 | Dec 19 | 2,460 |
| 1985-86 | 313 | 0.4 | 0.4 | 4,827 | Jan 31 | 1,730 |
| 1986-87 | 178 | 0.1 | 0.1 | 1,782 | Oct 02 | 1,400 |
| 1987-88 | 317 | 0 | 0 | 3,048 | Jan 17 | 4,950 |
| 1988-89 | 172 | 0.1 | 0.1 | 2,134 | Dec 15 | 1,150 |

M Data missing
* Record incomplete
E Estimate
N.D. Not determined
** Record not computed
\+ Less than 0.05 acre feet or less than 0.05 cfs, but greater than 0

# RUNOFF – STREAM GAGING STATION PEAK FLOW

## EATON WASH at Loftus Drive.
## STATION NO. F318-R

| Season | Daily CFS | | | Total Runoff (Acre-feet) | Peak Flow | |
|---|---|---|---|---|---|---|
| | Maximum | Minimum | Mean | | Date | CFS |
| 1989-90 | 383 | 0.1 | 0.1 | 2,289 | Apr 17 | 1,310 |
| 1990-91 | 331 | 0 | 0 | 3,948 | Feb 28 | 1,850 |
| 1991-92 | 757 | 0 | 0 | 10,304 | Feb 12 | 3,900 |
| 1992-93 | 664 | 0 | 0 | 21,580 | Dec 07 | 5,090 |
| 1993-94 | 159 | 0 | 0 | 2,122 | Mar 24 | 2,580 |
| 1994-95 | 954 | 0 | 0 | 14,500 | Mar 11 | 5,330 |
| 1995-96 | 551 | 0.1 | 0.1 | 5,734 | Jan 31 | 5,090 |
| 1996-97 | 236 | 0.1 | 0.1 | 4,630 | Jan 12 | 1,010 |
| 1997-98 | 1,070 | 0.1 | 0.1 | 14,050 | Feb 23 | 4,650 |
| 1998-99 | 136 | 0.2 | 0.2 | 1,990 | Nov 28 | 1,430 |
| 1999-00 | 247 | 0.1 | 0.1 | 3,720 | Feb 21 | 2,490 |
| 2000-01 | 352 | 0.2 | 0.2 | 4,680 | Jan 11 | 1,760 |
| 2001-02 | 236 | 0.2 | 2.3 | 1,685 | Nov 24 | 4,059 |
| 2002-03 | 558 | 0.1 | 7.4 | 5,353 | Mar 15 | 3,030 |
| 2003-04 | 411 | 0.4 | 4.9 | 3,580 | Feb 26 | 3,840 |
| 2004-05 | 1,420 | 0 | 38.2 | 27,600 | Jan 10 | 5,450 |
| 2005-06 | 258 | 0.1 | 6.4 | 4,600 | Jan 02 | 2,977 |
| 2006-07 | 96 | 0.2 | 1.7 | 1,248 | Feb 11 | 1,023 |
| 2007-08 | 373 | 0.1 | 6.9 | 5,009 | Jan 04 | 2,977 |
| 2008-09 | 230 | 0 | 4.3 | 3,110 | Feb 05 | 2,420 |
| 2009-10 | 337 | 0.1 | 8.8 | 6,350 | Jan 18 | 2,980 |
| 2010-11 | 557 | 0.07 | 12.4 | 8,950 | Dec 22 | 2,980 |
| 2011-12 | 233 | 0.11 | 3.48 | 2,530 | Apr 13 | 2,170 |
| 2012-13 | 105 | 0.38 | 2.64 | 1,910 | Oct 11 | 1,210 |
| 2013-14 | 318 | 0.45 | 2.33 | 1,690 | Feb 28 | 1,630 |
| 2014-15 | 220 | 0.12 | 3.24 | 2,350 | Dec 12 | 2,910 |
| 2015-16 | 321 | 0.12 | 3.82 | 2,780 | Jan 05 | 2,920 |
| 2016-17 | 408 | 0.24 | 9.19 | 6,650 | Feb 17 | 3,030 |
| 2017-18 | 90 | 0.08 | 2.67 | 1,930 | Mar 15 | 1,670 |
| 2018-19 | 528 | 0 | 9.68 | 7,010 | Feb 02 | 2,960 |
| 2019-20 | 272 | 0.33 | 5.63 | 4,080 | Apr 06 | 3,770 |

M Data missing
* Record incomplete
E Estimate
N.D. Not determined
** Record not computed
\+ Less than 0.05 acre feet or less than 0.05 cfs, but greater than 0

# RUNOFF – STREAM GAGING STATION PEAK FLOW

## EATON WASH below Eaton Wash Dam
## STATION NO. F271-R

| Season | Daily CFS | | | Total Runoff (Acre-feet) | Peak Flow | |
|---|---|---|---|---|---|---|
| | Maximum | Minimum | Mean | | Date | CFS |
| 1940-41 | 211 | 0 | 9.4 | 6,091 | Feb 20 | 256 |
| 1941-42 | N.D. | | | | | |
| 1942-43 | 663 | 0 | 11.2 | 6,399 | Jan 23 | 1,080 |
| 1943-44 | 161 | 0 | 5.5 | 1,967 | Mar 14 | 268 |
| 1944-45 | 17 | 0 | 0.1 | 101 | Feb 02 | 26 |
| 1945-46 | 43 | 0 | 0.4 | 265 | Dec 22 | 121 |
| 1946-47 | 63 | 0 | 0.7 | 507 | Dec 26 | 86 |
| 1947-48 | 2 | 0 | 0 | 6 | Dec 04 | 9 |
| 1948-49 | 0 | 0 | 0 | 1 | Dec 17 | 0 |
| 1949-50 | 14 | 0 | 0.1 | 70 | | |
| 1950-51 | 2 | 0 | 0 | 8 | | |
| 1951-52 | 166 | 0 | 2.5 | 1,827 | | |
| 1952-53 | N.D. | | | | | |
| 1953-54 | 40 | 0 | 0.3 | 199 | | |
| 1954-55 | N.D. | | | | | |
| 1955-56 | 41 | 0 | 0.2 | 150 | | |
| 1956-57 | 2 | 0 | 0 | 13 | | |
| 1957-58 | 136 | 0 | 2.9 | 2,035 | Feb 04 | 146 |
| 1958-59 | 29 | 0 | 0.2 | 158 | Feb 16 | 164 |
| 1959-60 | N.D. | | | | | |
| 1960-61 | N.D. | | | | | |
| 1961-62 | 204 | 0 | 1.9 | 1,299 | | |
| 1962-63 | 9 | 0 | 0 | 17 | | |
| 1963-64 | 8 | 0 | 0 | 36 | | |
| 1964-65 | 35 | 0 | 0.5 | 329 | | |
| 1965-66 | 173 | 0 | 5.1 | 3,651 | | |
| 1966-67 | 169 | 0 | 2.6 | 1,908 | | |
| 1967-68 | N.D. | | | | | |
| 1968-69 | N.D. | | | | | |
| 1969-70 | N.D. | | | | | |
| 1970-71 | N.D. | | | | | |
| 1971-72 | N.D. | | | | | |
| 1972-73 | N.D. | | | | | |

M Data missing
* Record incomplete
E Estimate
N.D. Not determined
** Record not computed
\+ Less than 0.05 acre feet or less than 0.05 cfs, but greater than 0

# RUNOFF – STREAM GAGING STATION PEAK FLOW

## EATON WASH below Eaton Wash Dam
## STATION NO. F271-R

| Season | Daily CFS | | | Total Runoff (Acre-feet) | Peak Flow | |
|---|---|---|---|---|---|---|
| | Maximum | Minimum | Mean | | Date | CFS |
| 1973-74 | N.D. | | | | | |
| 1974-75 | 27 | 0 | 0.6 | 405 | Mar 15 | 28 |
| 1975-76 | 27 | 0 | 0.6 | 425 | Mar 16 | 80 |
| 1976-77 | 22 | 0 | 0.4 | 315 | | 22 |
| 1977-78 | 206 | 0 | 5.3 | 3,456 | Mar 04 | 867 |
| 1978-79 | 34 | 0 | 3.4 | 2,446 | Nov 21 | 226 |
| 1979-80M | N.D. | | | | | |
| 1980-81 | 13 | 0 | 0.9 | 671 | | |
| 1981-82 | 29 | 0 | 2.1 | 1,524 | Apr 05 | 112 |
| 1982-83 | 804 | 0 | 26.1 | 18,918 | Mar 02 | 1,210 |
| 1983-84 | 45 | 0 | 2.7 | 1,927 | Oct 20 | 43 |
| 1984-85 | 27 | 0 | 1 | 698 | Jan 05 | 18 |
| 1985-86 | 42 | 0 | 2.6 | 1,933 | | |
| 1986-87 | NO RECORD | | | | | |
| 1987-88 | 21 | 0 | 0.9 | 651 | Apr 25 | 29 |
| 1988-89 | 27 | 0 | 0.3 | 345 | | |
| 1989-90 | 10 | 0 | 1.3 | 85 | | |
| 1990-91 | 60 | 0 | 2.1 | 1,568 | Mar 22 | 57 |
| 1991-92 | 274 | 0 | 8.4 | 6,132 | Feb 11 | 642 |
| 1992-93 | 441 | 0 | 20 | 14,503 | Jan 07 | 822 |
| 1993-94* | 16 | 0 | 1.1 | 692 | | N.D. |
| 1994-95 | 176 | 0 | 10.3 | 7,469 | Jan 10 | 429 |
| 1995-96* | 201 | 0 | 2.9 | 2,095 | Feb 21 | 298 |
| 1996-97 | 30 | 0 | 1.7 | 1,263 | Jan 27 | 83 |
| 1997-98 | 252 | 0 | 8.8 | 6,364 | | N.D. |
| 1998-99 | 9 | 0 | 0.2 | 142 | Jun 02 | 43 |
| 1999-00* | 67 | 0 | 1 | 711 | Feb 24 | 180 |
| 2000-01 | 32 | 0 | 1.1 | 795 | Apr 16 | 206 |
| 2001-02 | 8 | 0 | 0.2 | 117 | Dec 12 | 32 |
| 2002-03 | 17 | 0 | 0.7 | 518 | Mar 03 | 97 |
| 2003-04 | 17 | 0 | 0.4 | 300 | Aug 02 | 38 |
| 2004-05 | 156 | 0 | 15.4 | 11,200 | Oct 21 | 310 |
| 2005-06 | 30 | 0 | 2 | 1,480 | Oct 17 | 153 |

M Data missing
* Record incomplete
E Estimate
N.D. Not determined
** Record not computed
+ Less than 0.05 acre feet or less than 0.05 cfs, but greater than 0

# RUNOFF – STREAM GAGING STATION PEAK FLOW

## EATON WASH below Eaton Wash Dam
## STATION NO. F271-R

| Season | Daily CFS | | | Total Runoff (Acre-feet) | Peak Flow | |
|---|---|---|---|---|---|---|
| | Maximum | Minimum | Mean | | Date | CFS |
| 2006-07 | 5 | 0.1 | 1.3 | 16 | Mar 15 | 45 |
| 2007-08 | 61 | 0 | 2.7 | 1,936 | Dec 04 | 657 |
| 2008-09 | 30 | 0 | 0.5 | 368 | Feb 11 | 179 |
| 2009-10 | 132 | 0 | 3.1 | 2,280 | Jan 26 | 305 |
| 2010-11 | 145 | 0 | 6.31 | 4,570 | Apr 20 | 356 |
| 2011-12 | 10 | 0 | 0.077 | 56 | Apr 18 | 646 |
| 2012-13 | 2 | 0 | 0.057 | 41 | Oct 11 | 41 |
| 2013-14 | 20.8 | 0 | 0.12 | 84 | Mar 11 | 97.3 |
| 2014-15 | 17.1 | 0 | 0.19 | 136 | Dec 02 | 86.6 |
| 2015-16 | 6.55 | 0 | 0.06 | 44 | Apr 07 | 363 |
| 2016-17 | 55.3 | 0 | 1 | 718 | Apr 04 | 1,070 |
| 2017-18 | 9.35 | 0 | 0.046 | 33 | Apr 26 | 198 |
| 2018-19 | 82.3 | 0 | 5.12 | 3710 | Mar 05 | 166 |
| 2019-20 | 39 | 0 | 1.01 | 735 | Mar 12 | 90 |

M Data missing
* Record incomplete
E Estimate
N.D. Not determined
** Record not computed
\+ Less than 0.05 acre feet or less than 0.05 cfs, but greater than 0

# RUNOFF – STREAM GAGING STATION PEAK FLOW

**FISH CREEK above mouth of canyon.**
**STATION NO. U7-R**

| Season | Daily CFS | | | Total Runoff (Acre-feet) | Peak Flow | |
|---|---|---|---|---|---|---|
| | Maximum | Minimum | Mean | | Date | CFS |
| 1917-18 | 193 | 0.1 | 4.1 | 2,960 | Mar 10 | 330 |
| 1918-19 | 10 | 0 | 0.9 | 648 | Feb 11 | 21 |
| 1919-20 | 83 | + | 3 | 2,160 | Mar 02 | 255 |
| 1920-21 | 120 | 0 | 2.3 | 1,670 | Mar 13 | 286 |
| 1921-22 | 290 | 0.1 | 12.4 | 8,980 | Feb 09 | 505 |
| 1922-23 | 64 | 0.1 | 2.1 | 1,510 | Dec 12 | 186 |
| 1923-24 | 14 | 0 | 0.5 | 344 | Mar 26 | 58 |
| 1924-25 | 132 | 0 | 1.7 | 1,230 | Apr 04 | N.D. |
| 1925-26 | 410 | 0.1 | 7.2 | 5,170 | Apr 07 | N.D. |
| 1926-27 | 482 | 0.4 | 7 | 5,070 | Feb 16 | 945 |
| 1927-28 | 30 | N.D. | 1.2 | 860 | Feb 04 | 97 |
| 1928-29 | 41 | 0 | 1.4 | 1,040 | Mar 10 | 71 |
| 1929-30 | 42 | 0 | 1.5 | 1,070 | Jan 15 | 72 |
| 1930-31 | 26 | N.D. | 1.2 | 888 | Apr 26 | 70 |
| 1931-32 | 213 | N.D. | 4.9 | 3,560 | Dec 28 | 415 |
| 1932-33 | 167 | N.D. | 1.8 | 1,340 | Jan 19 | 299 |
| 1933-34 | 360 | N.D. | 3.4 | 2,440 | Jan 01 | 640 |
| 1934-35 | 150 | N.D. | 4.2 | 3,080 | Apr 08 | 420 |
| 1935-36 | 80 | 0.3 | 4.5 | 3,280 | Feb 02 | 676 |
| 1936-37 | 142 | 0.4 | 9.3 | 6,770 | Dec 30 | 252 |
| 1937-38 | 752 | 1 | 13.2 | 9,520 | Mar 02 | 2,100 |
| 1938-39 | 50 | 0.2 | 2.4 | 1,750 | Dec 19 | 172 |
| 1939-40 | 43 | 0.1 | 2.2 | 1,570 | Jan 08 | 225 |
| 1940-41 | 255 | 0.1 | 12.9 | 9,340 | Mar 04 | 443 |
| 1941-42 | 23 | 0.1 | 1.4 | 1,030 | Dec 10 | 44 |
| 1942-43 | 874 | 0.1 | 14.8 | 10,720 | Jan 23 | 2,100 |
| 1943-44 | 325 | 0.5 | 5.8 | 4,200 | Feb 22 | 680 |
| 1944-45 | 106 | 0.2 | 3.6 | 2,580 | Nov 11 | 400 |
| 1945-46 | 156 | 0.1 | 3.2 | 2,310 | Dec 23 | 540 |
| 1946-47 | 140 | 0.1 | 4 | 2,910 | Dec 26 | 400 |
| 1947-48 | 9 | N.D. | 0.7 | 536 | Apr 28 | 28 |
| 1948-49 | 18 | N.D. | 0.8 | 610 | Jan 20 | 35 |
| 1949-50 | 37 | 0 | 1.2 | 888 | Dec 18 | 157 |

M Data missing
* Record incomplete
E Estimate
N.D. Not determined
** Record not computed
\+ Less than 0.05 acre feet or less than 0.05 cfs, but greater than 0

# RUNOFF – STREAM GAGING STATION PEAK FLOW

**FISH CREEK above mouth of canyon.**
**STATION NO. U7-R**

| Season | Daily CFS | | | Total Runoff (Acre-feet) | Peak Flow | |
|---|---|---|---|---|---|---|
| | Maximum | Minimum | Mean | | Date | CFS |
| 1950-51 | 6 | 0 | 0.3 | 237 | Apr 28 | 16 |
| 1951-52 | 348 | 0 | 8.3 | 6,060 | Jan 16 | 1,360 |
| 1952-53 | 18 | 0 | 1.1 | 813 | Dec 01 | 252 |
| 1953-54 | 110 | 0 | 2.1 | 1,510 | Jan 25 | 376 |
| 1954-55 | 15 | 0 | 0.8 | 567 | Jan 18 | 39 |
| 1955-56 | 155 | 0 | 1.5 | 1,100 | Jan 26 | 544 |
| 1956-57 | 33 | 0 | 0.9 | 674 | Jan 13 | 108 |
| 1957-58 | 212 | 0 | 7.8 | 5,680 | Apr 03 | 608 |
| 1958-59 | 200 | 0.1 | 2.2 | 1,590 | Dec 06 | 2,000E |
| 1959-60 | 16 | 0 | 1.1 | 794 | Apr 27 | 84 |
| 1960-61 | 23 | 0 | 0.6 | 443 | Nov 12 | 230 |
| 1961-62 | 472 | 0 | 6.2 | 4,480 | Feb 11 | 770 |
| 1962-63 | 71 | 0 | 1.3 | 922 | Feb 09 | 346 |
| 1963-64 | 48 | 0 | 0.9 | 1,107 | Jan 21 | 178 |
| 1964-65 | 48 | 0 | 1.3 | 930 | Apr 09 | 163 |
| 1965-66 | 523 | 0 | 8.6 | 6,200 | Dec 29 | 1,670 |
| 1966-67 | 688 | 0.6 | 13.5 | 9,740 | Dec 06 | 2,250 |
| 1967-68 | 44 | 0.4 | 2.3 | 1,640 | Nov 19 | 282 |
| 1968-69 | 5,540 | 0.7 | 55.2 | 39,980 | Jan 25 | 13,000 |
| 1969-70 | 99 | 0.8 | 4.2 | 3,010 | Feb 28 | 898 |
| 1970-71 | 93 | 0.6 | 3.3 | 2,400 | Nov 29 | 259 |
| 1971-72 | 23 | 0.1 | 1 | 742 | Dec 24 | 62 |
| 1972-73 | 480 | 0.2 | 7.4 | 5,390 | Feb 11 | 1,600 |
| 1973-74 | 234 | 0.4 | 4.4 | 3,210 | Jan 07 | 376 |
| 1974-75 | 30 | 0.2 | 2.5 | 1,803 | Dec 04 | 56 |
| 1975-76 | 41 | 0.1 | 1.5 | 1,050 | Mar 01 | 143 |
| 1976-77 | 45 | 0 | 1 | 760 | | N.D. |
| 1977-78 | 386 | 0.1 | 15.5 | 11,242 | Feb 10 | 1,340 |
| 1978-79 | 35 | 0.2 | 4.4 | 3,164 | Dec 05 | 78 |
| 1979-80 | 448 | 0.4 | 0.5 | 10,806 | Feb 16 | 1,590 |
| 1980-81 | 44 | 0.2 | 1.7 | 1,264 | Jan 29 | 190 |
| 1981-82 | 13 | 0.1 | 2 | 1,424 | Jan 20 | 26 |
| 1982-83 | 575 | 0.4 | 18.7 | 13,552 | Mar 01 | 1,230 |

M Data missing
* Record incomplete
E Estimate
N.D. Not determined
** Record not computed
\+ Less than 0.05 acre feet or less than 0.05 cfs, but greater than 0

# RUNOFF – STREAM GAGING STATION PEAK FLOW

**FISH CREEK above mouth of canyon.**
**STATION NO. U7-R**

| Season | Daily CFS | | | Total Runoff (Acre-feet) | Peak Flow | |
|---|---|---|---|---|---|---|
| | Maximum | Minimum | Mean | | Date | CFS |
| 1983-84 | 35 | 0 | 2 | 1,487 | Dec 25 | 108 |
| 1984-85 | 29 | 0.1 | 17.6 | 1,100 | | N.D. |
| 1985-86 | * | * | * | * | | * |
| 1986-87 | 14 | 0 | 1.6 | 1,156 | | N.D. |
| 1987-88 | 49 | 0 | 1.5 | 1,082 | Jan 17 | 115 |
| 1988-89 | 81 | 0 | 21.1 | 1,219 | Feb 04 | 226 |
| 1989-90 | 35 | 0 | 0.6 | 466 | Feb 16 | 176 |
| 1990-91 | 87 | 0 | 2.5 | 1,837 | Mar 01 | 429 |
| 1991-92 | 318 | 0 | 10.3 | 7,481 | Feb 12 | 1,030 |
| 1992-93 | 422 | 0.3 | 20.2 | 14,640 | Feb 19 | 2,370 |
| 1993-94 | 13 | 0 | 1.2 | 843 | Feb 20 | 31 |
| 1994-95 | 248 | 0.2 | 10.5 | 7,620 | Mar 05 | 768 |
| 1995-96 | 295 | 0.1 | 5.2 | 3,797 | Feb 21 | 540 |
| 1996-97 | 125 | 0.2 | 4.9 | 3,520 | Dec 22 | 339 |
| 1997-98 | 500 | 0.1 | 10.9 | 7,860 | Mar 03 | 35 |
| 1998-99 | 2 | 0.2 | 1.3 | 935 | Mar 30 | 2 |
| 1999-00 | 17 | 0.6 | 1.7 | 1,220E | | N.D. |
| 2000-01 | 25 | 0 | 1.2 | 881 | Apr 16 | 98 |
| 2001-02 | 13 | 0 | 0.6 | 419 | Jan 27 | 43 |
| 2002-03 | 102 | 0 | 1.8 | 1,319 | Mar 16 | 291 |
| 2003-04 | 92 | 0 | 1.5 | 1,034 | Feb 26 | 548 |
| 2004-05 | 1,240 | 0 | 26.5 | 19,200 | Jan 09 | 1,750 |
| 2005-06 | 55 | 1.5 | 4.5 | 3,230 | Jan 02 | 336 |
| 2006-07 | 10 | 0.1 | 1.7 | 1,249 | Feb 27 | 23 |
| 2007-08 | 121 | 0.1 | 4.8 | 3,477 | Jan 05 | 548 |
| 2008-09 | 25 | 0.04 | 2.1 | 1,530 | Feb 07 | 77 |
| 2009-10 | 57 | 0.04 | 5.6 | 4,050 | Dec 12 | 182 |
| 2010-11 | 50 | 0.97 | 3.17 | 2,300 | Dec 18 | 50 |
| 2011-12 | 19 | 1.31 | 3.28 | 2,380 | Apr 13 | 19 |
| 2012-13 | 15 | 1.97 | 3.33 | 2,410 | Jul 01 | 18.6 |
| 2013-14 | 25.1 | 1.05 | 2.19 | 1,590 | Feb 28 | 25.1 |
| 2014-15 | 19.7 | 0.5 | 1.29 | 932 | Dec 12 | 19.7 |
| 2015-16 * | 26.3 | 1.05 | 1.29 | 938 | Jan 04 | 26.3 |

M Data missing
* Record incomplete
E Estimate
N.D. Not determined
** Record not computed
+ Less than 0.05 acre feet or less than 0.05 cfs, but greater than 0

# RUNOFF – STREAM GAGING STATION PEAK FLOW

**FISH CREEK above mouth of canyon.**
**STATION NO. U7-R**

| Season | Daily CFS | | | Total Runoff (Acre-feet) | Peak Flow | |
|---|---|---|---|---|---|---|
| | Maximum | Minimum | Mean | | Date | CFS |
| 2016-17 | 88.5 | 0.19 | 2.76 | 2,000 | Feb 16 | 88.5 |
| 2017-18 | 16.5 | 0 | 0.77 | 557 | Jan 10 | 24.7 |
| 2018-19 | 56.8 | 0 | 1.91 | 1,380 | Nov 23 | 69.1 |
| 2019-20 | 41.5 | 0 | 1.06 | 766 | Dec 22 | 57 |

M Data missing
* Record incomplete
E Estimate
N.D. Not determined
** Record not computed
+ Less than 0.05 acre feet or less than 0.05 cfs, but greater than 0

# RUNOFF – STREAM GAGING STATION PEAK FLOW

## LITTLE ROCK CREEK above Little Rock Dam.
## STATION NO. L1-R

| Season | Daily CFS | | | Total Runoff (Acre-feet) | Peak Flow | |
|---|---|---|---|---|---|---|
| | Maximum | Minimum | Mean | | Date | CFS |
| 1930-31 | 195 | 0 | 5 | 3,610 | Apr 26 | 430 |
| 1931-32 | 830 | 0 | * | 16,730* | Feb 08 | 2,200 |
| 1932-33 | 56 | 0 | 5.8 | 4,180 | Mar 09 | 66 |
| 1933-34 | 455 | 0 | 5.2 | 3,770 | | N.D. |
| 1934-35 | 716 | 0 | 24.4 | 17,640 | Feb 05 | 925 |
| 1935-36 | 127 | 0 | 4.6 | 3,320 | Feb 23 | 261 |
| 1936-37 | 679 | 0 | 30.3 | 21,950 | Feb 06 | 1,550 |
| 1937-38 | N.D. | 0 | N.D. | N.D. | Mar 02 | 17,000 |
| 1938-39 | NO RECORDS | | | | | |
| 1939-40 | 183 | 0 | 9.6 | 7,000 | Jan 08 | 555 |
| 1940-41 | 1,730 | 0 | 71.3 | 51,620 | Feb 20 | 2,240 |
| 1941-42 | 55 | + | 7.1 | 5,140 | Apr 14 | 92 |
| 1942-43 | 2,730.0E | 0 | 49.5 | 35,870 | Jan 23 | 5,700 |
| 1943-44 | 736 | 0.8 | 49.6 | 35,940 | Feb 22 | 902 |
| 1944-45 | 323 | 0.1 | 12.8 | 9,250 | Nov 11 | 1,080 |
| 1945-46 | 604 | 0 | 16.7 | 12,150 | Dec 21 | 1,100 |
| 1946-47 | 1,740 | 0 | 21.9 | 15,840 | Dec 26 | 3,180 |
| 1947-48 | 62 | 0 | 3.4 | 2,450 | Apr 29 | 122 |
| 1948-49 | 33 | 0 | 4.4 | 3,170 | Apr 14 | 37 |
| 1949-50 | 114 | 0 | 3.4 | 2,470 | Feb 06 | 212 |
| 1950-51 | 5 | 0 | 0.6 | 432 | May 04 | 5 |
| 1951-52 | 311 | 0 | 31.6 | 22,890 | Dec 30 | 502 |
| 1952-53 | 33 | 0 | 4.2 | 3,020 | Jan 09 | 36 |
| 1953-54 | 328 | 0 | 11.6 | 8,430 | Jan 25 | 655 |
| 1954-55 | 116 | + | 10.1 | 7,310 | Nov 11 | 236 |
| 1955-56 | 424 | 0 | 7.5 | 5,470 | Jan 26 | 1,050 |
| 1956-57 | 399 | 0 | 6.3 | 4,560 | Jan 13 | 1,040 |
| 1957-58 | 521 | 0 | 40.7 | 29,500 | Dec 15 | 1,070 |
| 1958-59 | 163 | 0 | 5.7 | 4,150 | Feb 16 | 598 |
| 1959-60 | 15 | 0 | 2.4 | 1,750 | Jan 26 | 17 |
| 1960-61 | 25 | 0 | 1.8 | 1,290 | Nov 06 | 37 |
| 1961-62 | 2,060 | 0 | 25.8 | 18,640 | Feb 11 | 3,180 |
| 1962-63 | 112 | 0 | 3 | 2,200 | Feb 10 | 314 |

M Data missing
* Record incomplete
E Estimate
N.D. Not determined
** Record not computed
+ Less than 0.05 acre feet or less than 0.05 cfs, but greater than 0

# RUNOFF – STREAM GAGING STATION PEAK FLOW

## LITTLE ROCK CREEK above Little Rock Dam.
## STATION NO. L1-R

| Season | Daily CFS | | | Total Runoff | Peak Flow | |
|---|---|---|---|---|---|---|
| | Maximum | Minimum | Mean | (Acre-feet) | Date | CFS |
| 1963-64 | 38 | 0 | 3.8 | 2,800 | Apr 01 | 49 |
| 1964-65 | 115 | 0 | 7.1 | 5,150 | Apr 19 | 155 |
| 1965-66 | 1,700 | 0 | 33.9 | 24,500 | Dec 29 | 5,240 |
| 1966-67 | 1,330 | 0 | 29.2 | 21,230 | Dec 06 | 1,970 |
| 1967-68 | 264 | + | 11.6 | 8,390 | Nov 21 | 444 |
| 1968-69 | 1,810 | + | 57.2 | 41,430 | Jan 25 | 5,900 |
| 1969-70 | 175 | 0 | 9.5 | 6,850 | Feb 10 | 287 |
| 1970-71 | 453 | 0 | 10.6 | 7,700 | Nov 29 | 1,490 |
| 1971-72 | 382 | 0 | 6 | 4,320 | Dec 24 | 801 |
| 1972-73 | 556 | 0 | 16.1 | 11,680 | Feb 11 | 1,880 |
| 1973-74 | 70 | 0 | 10.4 | 7,540 | Mar 02 | 87 |
| 1974-75 | 124 | 0 | 7.8 | 5,640 | Mar 08 | 230 |
| 1975-76 | 270 | 0 | 7.6 | 5,530 | Feb 08 | 643 |
| 1976-77 | 74 | 0 | 7.3 | 5,296 | May 08 | 181 |
| 1977-78 | * | * | * | * | Feb 10 | * |
| 1978-79 | 249 | 0.5 | 25.6 | 18,562 | Mar 27 | 367 |
| 1979-80 | 1,705 | 0 | 45.8 | 32,580 | Feb 19 | 3,998 |
| 1980-81 | 44 | 0 | 5.9 | 4,726 | Mar 20 | 59 |
| 1981-82 | 575 | 0 | 18.3 | 13,243 | Apr 11 | 1,132 |
| 1982-83 | 2,413 | 0 | 66.5 | 48,136 | Mar 01 | 3,482 |
| 1983-84 | 244 | 0 | 7.1 | 5,124 | Dec 25 | 539 |
| 1984-85 | 36 | 0 | 8 | 5,764 | Dec 27 | 45 |
| 1985-86 | 515 | 0 | 17.3 | 12,510 | Jan 30 | 1,162 |
| 1986-87 | 64 | 0 | 2.5 | 1,818 | Mar 06 | 87 |
| 1987-88 | 205 | 0 | 25.1 | 18,286 | | N.D. |
| 1988-89 | 47 | 0 | 6.3 | 4,701 | Feb 09 | 61 |
| 1989-90 | * | * | * | * | Jan 23 | 41 |
| 1990-91 | 369 | 0 | 8.6 | 8,094 | Mar 01 | 839 |
| 1991-92 | * | * | * | * | | * |
| 1992-93 | * | * | * | * | | * |
| 1993-94 | 47 | 0 | N.D. | * | | N.D. |
| 1994-95 | 795 | 0 | 44.9 | 32,480 | Jan 10 | 2,000 |
| 1995-96 | 638 | 0 | 8.9 | 6,474 | Feb 21 | 1,100 |

M Data missing
* Record incomplete
E Estimate
N.D. Not determined
** Record not computed
+ Less than 0.05 acre feet or less than 0.05 cfs, but greater than 0

# RUNOFF – STREAM GAGING STATION PEAK FLOW

**LITTLE ROCK CREEK above Little Rock Dam.**
**STATION NO. L1-R**

| Season | Daily CFS | | | Total Runoff (Acre-feet) | Peak Flow | |
|---|---|---|---|---|---|---|
| | Maximum | Minimum | Mean | | Date | CFS |
| 1996-97 | 207 | 0 | 7.3 | 5,260 | Jan 26 | 264 |
| 1997-98 | 1,610 | 0 | 52.3 | 37,890 | Feb 23 | 3,470 |
| 1998-99 | 23 | 0 | 3.8 | 2,720 | Feb 10 | 27 |
| 1999-00 | 168 | 0 | 6.9 | 5,000 | Feb 23 | 519 |
| 2000-01 | 154 | 0 | 14.9 | 10,760 | Mar 06 | 219 |
| 2001-02 | 3 | 0 | 0.6 | 305 | Jan 29 | 4 |
| 2002-03 | 0 | 0 | 13.1 | 0 | Feb 12 | 3,720 |
| 2003-04 | 173 | 0 | 4.7 | 3,370 | Feb 26 | 473 |
| 2004-05 | 2,440 | 0 | 85.1 | 61,480 | Jan 09 | 5,040 |
| 2005-06 | 330 | 0 | 17 | 8,620 | Feb 28 | 786 |
| 2006-07 | 8 | 0 | 3.2 | 1,604 | Feb 01 | 9 |
| 2007-08 | 578 | 0 | 14.8 | 10,709 | Jan 27 | 1,427 |
| 2008-09 | 58 | 0 | 4.8 | 3,440 | Feb 06 | 72 |
| 2009-10 | 282 | 0 | 16.6 | 12,030 | Feb 06 | 551 |
| 2010-11 | 1,030 | 0 | 31.7 | 22,930 | Dec 20 | 2,180 |
| 2011-12 | 35 | 0 | 4.5 | 3,270 | Apr 18 | 40 |
| 2012-13 | 30 | 0 | 1.56 | 1,130 | Jan 26 | 34 |
| 2013-14 | 23.4 | 0 | 0.94 | 684 | Feb 28 | 214 |
| 2014-15 | 23.4 | 0 | 2.02 | 1,470 | Dec 12 | 74.4 |
| 2015-16 | 18.3 | 0 | 2.03 | 1,470 | Feb 18 | 46 |
| 2016-17 | 71.5 | 0 | 6.59 | 4,770 | Feb 18 | 177 |
| 2017-18 | 145 | 0 | 2.87 | 2,080 | Mar 22 | 264 |
| 2018-19 | 667 | 0 | 25.9 | 18,750 | Feb 14 | 2380 |
| 2019-20 | 180 | 0 | 18.7 | 13,580 | Apr 08 | 211 |

M Data missing
* Record incomplete
E Estimate
N.D. Not determined
** Record not computed
\+ Less than 0.05 acre feet or less than 0.05 cfs, but greater than 0

# RUNOFF – STREAM GAGING STATION PEAK FLOW

**LIVE OAK CREEK below Live Oak Dam.**
**STATION NO. F356-R**

| Season | Daily CFS | | | Total Runoff (Acre-feet) | Peak Flow | |
|---|---|---|---|---|---|---|
| | Maximum | Minimum | Mean | | Date | CFS |
| 1963-64 | N.D. | | | | | |
| 1964-65 | 3 | 0 | 0 | 14 | Jun 24 | 78 |
| 1965-66 | 6 | 0 | 0.3 | 209 | Mar 01 | 6 |
| 1966-67 | 44 | 0 | 0.9 | 671 | Dec 06 | 194 |
| 1967-68 | N.D. | | | | | |
| 1968-69 | N.D. | | | | | |
| 1969-70 | N.D. | | | | | |
| 1970-71 | N.D. | | | | | |
| 1971-72 | N.D. | | | | | |
| 1972-73 | N.D. | | | | | |
| 1973-74 | N.D. | | | | | |
| 1974-75 | 5 | 0 | 0.1 | 78 | Apr 08 | 5 |
| 1975-76 | 5 | 0 | 0 | 27 | Apr 26 | 6 |
| 1976-77 | 2 | 0 | 0 | 31 | Aug 17 | 4 |
| 1977-78 | 73 | 0 | 2.1 | 1,517 | Mar 04 | 120 |
| 1978-79 | 4 | 0 | 0.9 | 656 | Mar 30 | 5 |
| 1979-80 | 84 | 0 | 2.6 | 1,907 | Feb 17 | 105 |
| 1980-81 | 3 | 0 | 0.3 | 219 | Mar 03 | 4 |
| 1981-82 | 20 | 0 | 0.6 | 417 | Mar 18 | 21 |
| 1982-83 | 45 | 0 | 0 | 1,780 | | |
| 1983-84 | 2 | 0 | 0.6 | 450 | Dec 05 | 3 |
| 1984-85 | 4 | 0 | 0.2 | 163 | | |
| 1985-86 | 2 | 0 | 0.3 | 196 | Mar 25 | 2 |
| 1986-87 | 1 | 0 | 0 | 38 | | |
| 1987-88 | 6 | 0 | 0 | 69 | | |
| 1988-89 | 5 | 0 | 0.1 | 94 | Feb 14 | 8 |
| 1989-90 | 2 | 0 | 0.1 | 42 | May 28 | 3 |
| 1990-91 | 4 | 0 | 0.3 | 200 | Mar 04 | 5 |
| 1991-92 | 18 | 0 | 0.4 | 273 | Feb 13 | 36 |
| 1992-93 | 48 | 0 | 2.4 | 1,706 | Feb 22 | 80 |
| 1993-94 | 6 | 0 | 0.3 | 200 | May 10 | 6 |
| 1994-95 | 30 | 0 | 1.5 | 1,058 | Mar 06 | 103 |
| 1995-96 | 24 | 0 | 0.5 | 393 | Feb 21 | 82 |

M Data missing
* Record incomplete
E Estimate
N.D. Not determined
** Record not computed
\+ Less than 0.05 acre feet or less than 0.05 cfs, but greater than 0

# RUNOFF – STREAM GAGING STATION PEAK FLOW

**LIVE OAK CREEK below Live Oak Dam.**
**STATION NO. F356-R**

| Season | Daily CFS | | | Total Runoff (Acre-feet) | Peak Flow | |
|---|---|---|---|---|---|---|
| | Maximum | Minimum | Mean | | Date | CFS |
| 1996-97 | 7 | 0 | 0.5 | 349 | Dec 17 | 25 |
| 1997-98 | 51* | 0* | 1.07* | 773.87* | Feb 24 | 65 |
| 1998-99 | 9 | 0 | 0.1 | 104 | Dec 08 | 30 |
| 1999-00 | 1.1* | 0* | 0.11* | 77.85* | Jun 20 | 25 |
| 2000-01 | 20 | 0 | 0.2 | 120 | Jul 10 | 61 |
| 2001-02 | 0 | 0 | 0 | 2 | May 21 | 15 |
| 2002-03 | 5 | 0 | 0.7 | 49 | Nov 19 | 19 |
| 2003-04 | 14 | 0 | 0.3 | 230 | Mar 01 | 16 |
| 2004-05 | 156 | 0 | 4 | 2,920 | Jan 09 | 210 |
| 2005-06 | 15 | 0.1 | 1.1 | 812 | Oct 15 | 36 |
| 2006-07 | 4 | 0.1 | 1.7 | 994 | May 01 | 34 |
| 2007-08 | 4 | 0 | 0.9 | 632 | Oct 23 | 35 |
| 2008-09 | 8 | 0 | 0.4 | 314 | Feb 10 | 9 |
| 2009-10 | 14 | 0 | 0.49 | 352 | Apr 27 | 16 |
| 2010-11 | 14 | 0 | 1.08 | 781 | Mar 28 | 18 |
| 2011-12 | 4 | 0 | 1.55 | 1,130 | Apr 26 | 50 |
| 2012-13 | 1 | 0 | 0.21 | 150 | May 26 | 1 |
| 2013-14 | 0.2 | 0 | 0.001 | 0.5 | Jun 10 | 2.26 |
| 2014-15 | 0.64 | 0 | 0.018 | 13 | Feb 23 | 1.17 |
| 2015-16 | 1.03 | 0 | 0.006 | 4.2 | Apr 19 | 5.8 |
| 2016-17 | 13.4 | 0 | 0.65 | 471 | Apr 12 | 188 |
| 2017-18 | 1.28 | 0 | 0.046 | 33 | Apr 10 | 3.35 |
| 2018-19 | 103 | 0 | 1.58 | 1140 | Apr 16 | 264 |
| 2019-20 | 10.5 | 0 | 0.12 | 84 | Apr 21 | 10.5 |

M Data missing
* Record incomplete
E Estimate
N.D. Not determined
** Record not computed
+ Less than 0.05 acre feet or less than 0.05 cfs, but greater than 0

# RUNOFF – STREAM GAGING STATION PEAK FLOW

## LOS ANGELES RIVER below Wardlow River Road.
## STATION NO. F319-R

| Season | Daily CFS | | | Total Runoff | Peak Flow | |
|---|---|---|---|---|---|---|
| | Maximum | Minimum | Mean | (Acre-feet) | Date | CFS |
| 1928-29 | N.D. | N.D. | N.D. | 9,340E | Mar 10 | 2,870E |
| 1929-30 | 1,270 | 0.9 | 17 | 12,310 | Mar 15 | 1,670 |
| 1930-31 | 1,390 | 0 | 19.9 | 14,400 | Feb 03 | 3,700 |
| 1931-32 | 7,130 | 0.8 | 70.2 | 50,960 | Feb 09 | 8,380 |
| 1932-33 | 3,310 | 0.3 | 31.6 | 22,890 | Jan 19 | 8,710 |
| 1933-34 | 19,900 | 0 | 93.7 | 67,860 | Jan 01 | 37,500 |
| 1934-35 | 2,930 | 1.6 | 55.9 | 40,470 | Apr 08 | 11,000 |
| 1935-36 | 1,630 | 2.3 | 28.3 | 20,470 | Feb 12 | 10,400 |
| 1936-37 | 6,800 | 3.3 | 126 | 91,110 | Feb 14 | 20,500 |
| 1937-38 | 50,000 | 1 | 564 | 408,000 | Mar 02 | 99,000E |
| 1938-39 | 6,220 | 3.5 | 114 | 82,750 | Sep 25 | 17,300 |
| 1939-40 | 2,830E | 15 | 90.8 | 65,930 | Feb 02 | 8,440 |
| 1940-41 | 11,120 | 18 | 510 | 369,500 | Mar 04 | 18,170 |
| 1941-42 | 3,180 | 31 | 129 | 93,390 | Dec 10 | 10,800 |
| 1942-43 | 18,100 | 28 | 366 | 264,900 | Jan 23 | 37,900 |
| 1943-44 | 17,190 | 38 | 299 | 217,400 | Feb 22 | 34,000 |
| 1944-45 | 3,020 | 33 | 138 | 100,200 | Nov 12 | 11,600 |
| 1945-46 | 6,440 | 30 | 127 | 91,790 | Dec 22 | 12,800 |
| 1946-47 | 5,750 | 18 | 146 | 106,000 | Dec 26 | 18,810 |
| 1947-48 | 1,540 | 19 | 72.8 | 52,820 | Mar 24 | 9,310 |
| 1948-49 | 1,790 | 13 | 61.3 | 44,350 | Dec 17 | 5,520 |
| 1949-50 | 2,360 | 6.3 | 58.3 | 42,180 | Feb 06 | 9,090 |
| 1950-51 | 1,610 | 5.6 | 50.6 | 36,600 | Jan 29 | 9,040 |
| 1951-52 | 16,310 | 3.8 | 292 | 212,200 | Jan 16 | 47,800 |
| 1952-53 | 2,932 | 1.9 | 61.4 | 44,490 | Nov 15 | 21,100 |
| 1953-54 | 8,120 | 2.5 | 97.8 | 70,790 | Feb 13 | 34,760 |
| 1954-55 | 4,180 | 2.2 | 83 | 60,120 | Jan 18 | 17,750 |
| 1955-56 | 12,700 | 7 | 133 | 96,810 | Jan 26 | 40,500 |
| 1956-57 | 4,550 | 5.5 | 67.3 | 48,710 | Feb 23 | 23,000 |
| 1957-58 | 10,400 | 6.4 | 264 | 191,200 | Feb 19 | 43,800 |
| 1958-59 | 6,340 | 7.2 | 68.2 | 49,390 | Jan 06 | 31,000 |
| 1959-60 | 3,420 | 3.7 | 67.6 | 49,100 | Jan 12 | 21,700 |

M Data missing
* Record incomplete
E Estimate
N.D. Not determined
** Record not computed
\+ Less than 0.05 acre feet or less than 0.05 cfs, but greater than 0

# RUNOFF – STREAM GAGING STATION PEAK FLOW

## LOS ANGELES RIVER below Wardlow River Road.
## STATION NO. F319-R

| Season | Daily CFS | | | Total Runoff (Acre-feet) | Peak Flow | |
|---|---|---|---|---|---|---|
| | Maximum | Minimum | Mean | | Date | CFS |
| 1960-61 | 2,860 | 1.3 | 44.2 | 32,000 | Jan 26 | 9,450 |
| 1961-62 | 14,800 | 0.6 | 245 | 177,400 | Feb 12 | 42,200 |
| 1962-63 | 5,480 | 1.2 | 75.6 | 54,700 | Feb 09 | 31,400 |
| 1963-64 | 4,150 | 5.3 | 64.8 | 47,020 | Jan 22 | 16,000 |
| 1964-65 | 5,150 | 4.1 | 106 | 76,680 | Apr 09 | 30,100 |
| 1965-66 | 22,500 | 3 | 342 | 247,900 | Dec 29 | 61,500 |
| 1966-67 | 12,400 | 9.9 | 237 | 171,900 | Nov 07 | 43,700 |
| 1967-68 | 13,600 | 18 | 173 | 125,800 | Mar 08 | 48,900 |
| 1968-69 | 55,000 | 16 | 1,150.00 | 832,000 | Jan 25 | 102,000 |
| 1969-70 | 5,300 | 22 | 128 | 92,070 | Feb 28 | 5,300 |
| 1970-71 | 20,600 | 20 | 201* | 145,300* | Nov 29 | 65,100 |
| 1971-72 | 8,550 | 17 | 106 | 77,560 | Dec 24 | 28,700 |
| 1972-73 | 16,170 | 20 | 253 | 183,300 | Feb 11 | 50,800 |
| 1973-74 | 17,200 | 17 | 190 | 137,800 | Jan 07 | 42,800 |
| 1974-75 | 11,200 | 13 | 159 | 115,000 | Dec 04 | 64,470 |
| 1975-76 | 4,660 | 11.5 | 102 | 72,670 | Feb 09 | 16,020 |
| 1976-77 | 7,130 | 5.3 | 140.4 | 101,700 | Jan 03 | 29,528 |
| 1977-78 | 42,323 | 11 | 923 | 668,337 | Feb 10 | 94,800 |
| 1978-79 | 13,000 | 33 | 379.2 | 274,500 | Mar 27 | 50,900 |
| 1979-80 | 33,437 | 39 | 887.9 | 544,632 | Feb 16 | 128,700 |
| 1980-81 | 6,550 | 27 | 173.2 | 125,893 | Jan 29 | 33,800 |
| 1981-82 | 11,400 | 32 | 246.2 | 178,227 | Apr 01 | 26,800 |
| 1982-83 | 52,000 | 38 | 1,047.00 | 758,465 | Mar 01 | 81,800 |
| 1983-84 | 6,530 | 41 | 166.8 | 120,740 | Dec 25 | 22,300 |
| 1984-85 | 6,370 | 34 | 1,970.00 | 118,440 | Dec 19 | 23,500 |
| 1985-86 | 13,600 | 51.4 | 338 | 244,741 | Feb 15 | 54,400 |
| 1986-87 | 4,050 | 92.6 | 164 | 118,510 | Nov 18 | 15,500 |
| 1987-88 | 8,230 | 85 | 242.8 | 176,277 | Dec 04 | 48,900 |
| 1988-89 | 3,740 | 101 | 195 | 141,249 | Dec 16 | 16,900 |
| 1989-90 | 12,100 | 115 | 196 | 141,594 | Feb 17 | 25,600 |
| 1990-91 | 10,700 | 108 | 310 | 224,410 | Feb 28 | 42,400 |
| 1991-92 | 23,800 | 110 | 668 | 484,849 | Feb 12 | 66,400 |

M Data missing
* Record incomplete
E Estimate
N.D. Not determined
** Record not computed
+ Less than 0.05 acre feet or less than 0.05 cfs, but greater than 0

# RUNOFF – STREAM GAGING STATION PEAK FLOW

## LOS ANGELES RIVER below Wardlow River Road.
## STATION NO. F319-R

| Season | Daily CFS | | | Total Runoff (Acre-feet) | Peak Flow | |
|---|---|---|---|---|---|---|
| | Maximum | Minimum | Mean | | Date | CFS |
| 1992-93 | 35,000 | 123 | 1,549.00 | 1,122,000 | Feb 08 | 86,000 |
| 1993-94 | 4,090 | 113 | 259 | 187,400 | Mar 24 | 19,700 |
| 1994-95 | 43,900 | 92.5 | 1,022.00 | 740,000 | Mar 11 | 113,000 |
| 1995-96 | 15,100 | 96.8 | 261 | 189,200 | Feb 21 | 35,400 |
| 1996-97 | 7,390 | 91 | 299 | 216,300 | Dec 09 | 28,600 |
| 1997-98 | * | * | * | * | | * |
| 1998-99 | M | * | * | | | M |
| 1999-00 | 477* | 164.0* | 203.0* | 24,560* | | N.D. |
| 2000-01 | 12,700 | 116 | 405 | 293,500 | Jan 11 | 54,400 |
| 2001-02 | 3,838 | 105.1 | 185.8 | 131,061 | Nov 24 | 28,837 |
| 2002-03 | 19,959 | 68.4 | 317 | 229,041 | Feb 12 | 58,000 |
| 2003-04 | 15,433 | 86.2 | 196 | 142,369 | Feb 26 | 61,300 |
| 2004-05 | 44,900 | 76 | 1,274.00 | 922,000 | Jan 09 | 71,500 |
| 2005-06 | 7,860 | 110 | 276 | 199,500 | Jan 02 | 39,328 |
| 2006-07 | 3,460 | 105 | 151.2 | 109,493 | Sep 22 | 11,301 |
| 2007-08 | 11,000 | 112 | 284.7 | 206,678 | Jan 05 | 57,783 |
| 2008-09 | 6,420 | 110 | 207 | 149,700 | Dec 15 | 30,200 |
| 2009-10 | 14,400 | 115 | 334 | 241,700 | Feb 06 | 56,800 |
| 2010-11 | 16,100 | 92.7 | 429 | 310,500 | Mar 20 | 36,800 |
| 2011-12 | 6,180 | 109 | 308 | 223,300 | Nov 20 | 31,600 |
| 2012-13 | 4,570 | 102 | 327 | 236,900 | Mar 08 | 18,100 |
| 2013-14 | 9,750 | 97.5 | 214 | 154,700 | Jun 10 | 31,200 |
| 2014-15 | 8,230 | 106 | 248 | 179,500 | Sep 15 | 30,000 |
| 2015-16 | 7,190 | 110 | 244 | 177,200 | Jan 05 | 31,200 |
| 2016-17 | 17,100 | 112 | 464 | 335,800 | Jan 22 | 63,900 |
| 2017-18 | 9,300 | 112 | 218 | 157,800 | Jan 09 | 21,300 |
| 2018-19 | 15,400 | 56.4 | 458 | 331,400 | Feb 02 | 70,900 |
| 2019-20 | 12,400 | 47.2 | 266 | 192,800 | Dec 26 | 44,000 |

M Data missing
* Record incomplete
E Estimate
N.D. Not determined
** Record not computed
+ Less than 0.05 acre feet or less than 0.05 cfs, but greater than 0

# RUNOFF – STREAM GAGING STATION PEAK FLOW

## LOS ANGELES RIVER at Tujunga Avenue.
## STATION NO. F300-R

| Season | Daily CFS | | | Total Runoff | Peak Flow | |
|---|---|---|---|---|---|---|
| | Maximum | Minimum | Mean | (Acre-feet) | Date | CFS |
| 1950-51 | 181 | 2.6 | 12.3 | 8,910 | Jan 29 | 598 |
| 1951-52 | 5,360 | 3.1 | 101 | 73,040 | Jan 15 | 13,200 |
| 1952-53 | 851 | 6.5 | 27.1 | 19,610 | Dec 01 | 2,900 |
| 1953-54 | 1,360 | 4.6 | 27.2 | 19,690 | Feb 13 | 5,190 |
| 1954-55 | 842 | 5.7 | 30.4 | 22,000 | Jan 10 | 4,560 |
| 1955-56 | 3,890 | 5.7 | 35.1 | 25,490 | Jan 16 | 6,800 |
| 1956-57 | 1,300 | 4.5 | 27.2 | 19,700 | Jan 13 | 6,060 |
| 1957-58 | 3,530 | 3.8 | 100 | 72,710 | Apr 03 | 10,800 |
| 1958-59 | 2,080 | 4.8 | 29.2 | 21,180 | Jan 06 | 12,800 |
| 1959-60 | 1,040 | 4 | 28 | 20,650 | Jan 12 | 6,900 |
| 1960-61 | 1,010 | 3.2 | 18.3 | 13,260 | Nov 05 | 6,600 |
| 1961-62 | 6,170 | 2.6 | 97.7 | 70,690 | Feb 12 | 21,000 |
| 1962-63 | 2,200 | 4 | 34.1 | 24,690 | Feb 09 | 8,700 |
| 1963-64 | 1,440 | 3.6 | 35.4 | 25,730 | Jan 22 | 7,910 |
| 1964-65 | 2,020 | 5 | 50.4 | 36,490 | Apr 09 | 7,840 |
| 1965-66 | 8,990 | 8.2 | 126 | 91,340 | Dec 29 | 20,500 |
| 1966-67 | 5,860 | 5.2 | 83.3 | 60,320 | Nov 07 | 21,000 |
| 1967-68 | 5,720 | 5.5 | 66.8 | 48,500 | Mar 08 | 18,300 |
| 1968-69 | 19,100 | 4.8 | 355 | 256,800 | Jan 25 | 30,800 |
| 1969-70 | 2,450 | 6.4 | 55.4 | 40,080 | Mar 04 | 11,600 |
| 1970-71 | 9,170 | 7 | 95.4 | 69,090 | Nov 29 | 25,900 |
| 1971-72 | 2,800 | 7.8 | 38 | 27,520 | Dec 27 | 11,000 |
| 1972-73 | 6,470 | 5.5 | 101 | 73,100 | Jan 18 | 17,900 |
| 1973-74 | 7,650 | 5 | 73 | 52,830 | Jan 07 | 16,100 |
| 1974-75 | 3,570 | 5 | 57.1 | 41,310 | Dec 04 | 16,740 |
| 1975-76 | 2,440 | 3.7 | 35.5 | 25,200 | Feb 09 | 9,680 |
| 1976-77 | 2,920 | 1.5 | 50.9 | 36,850 | Jan 03 | 15,300 |
| 1977-78 | 19,200 | 0.8 | 454.6 | 329,106 | Feb 10 | 30,100 |
| 1978-79 | 5,210 | 5.5 | 136 | 98,301 | Mar 27 | 22,500 |
| 1979-80 | 9,440 | 8.4 | 284.9 | 202,020 | Feb 16 | 27,625 |
| 1980-81 | 2,600 | 10 | 77.7 | 56,220 | Jan 29 | 17,940 |
| 1981-82 | 3,610 | 5 | 72.7 | 52,648 | Mar 17 | 17,800 |
| 1982-83 | 19,580 | 5.7 | 416.8 | 301,711 | Mar 01 | 27,625 |

M Data missing
* Record incomplete
E Estimate
N.D. Not determined
** Record not computed
\+ Less than 0.05 acre feet or less than 0.05 cfs, but greater than 0

# RUNOFF – STREAM GAGING STATION PEAK FLOW

## LOS ANGELES RIVER at Tujunga Avenue.
## STATION NO. F300-R

| Season | Daily CFS | | | Total Runoff (Acre-feet) | Peak Flow | |
|---|---|---|---|---|---|---|
| | Maximum | Minimum | Mean | | Date | CFS |
| 1983-84 | NO RECORD | | | | | |
| 1984-85 | 1,820 | 8.1 | 47.4 | 34,312 | Dec 18 | 6,740 |
| 1985-86 | 3,060 | 20 | 126 | 91,248 | Jan 31 | 16,700 |
| 1986-87 | * | * | * | * | | * |
| 1987-88 | 3,850 | 31.7 | 164.4 | 118,911 | Oct 22 | 24,300 |
| 1988-89 | 1,460 | 59.8 | 103.4 | 74,960 | Dec 24 | 5,140 |
| 1989-90 | 2,910 | 55.6 | 93.5 | 67,699 | Feb 17 | 7,296 |
| 1990-91 | 3,130 | 14.4 | 113.7 | 82,553 | Feb 27 | 13,500 |
| 1991-92 | 10,800 | 33.7 | 239 | 173,398 | Feb 11 | 22,300 |
| 1992-93 | 10,600 | 51.9 | 416 | 301,300 | Feb 07 | 25,700 |
| 1993-94 | 2,390 | 54.7 | 133 | 96,020 | | N.D. |
| 1994-95 | 10,800 | 53.7 | 252 | 167,800 | Mar 10 | 35,000 |
| 1995-96 | 3,110 | 51 | 117 | 84,630 | Feb 21 | 13,000 |
| 1996-97 | 2,590 | 53 | 156 | 112,700 | Dec 09 | 12,300 |
| 1997-98 | 11,900 | 63 | 420 | 304,200 | Feb 23 | 30,500 |
| 1998-99 | 1,200 | 35 | 85.1 | 61,630 | Jan 31 | 9,320 |
| 1999-00 | 1,200 | 35 | 85.1 | 61,630 | Feb 23 | 9,320 |
| 2000-01 | 2,790 | 47 | 134 | 97,450 | Jan 11 | 17,200 |
| 2001-02 | 1,489 | 26.6 | 90.5 | 65,515 | Nov 24 | 12,815 |
| 2002-03 | 10,976 | 43.3 | 187 | 135,474 | Feb 12 | 25,000 |
| 2003-04 | 3,712 | 42.1 | 110 | 80,740 | Feb 26 | 16,400 |
| 2004-05 | 15,800 | 35 | 582 | 421,000 | Jan 09 | 25,300 |
| 2005-06 | 3,540 | 45 | 157 | 113,700 | Jan 02 | 15,647 |
| 2006-07 | 3,720 | 48.4 | 93.3 | 67,538 | Sep 22 | 21,748 |
| 2007-08 | 1,050 | 124 | 146.9 | 106,660 | Jan 04 | 14,945 |
| 2008-09 | 2,200 | 31.9 | 94.3 | 68,300 | Dec 15 | 10,400 |
| 2009-10 | 4,500 | 42.8 | 163 | 117,700 | Feb 06 | 20,500 |
| 2010-11 | 10,600 | 42.9 | 240 | 173,700 | Mar 20 | 29,300 |
| 2011-12 | 2,540 | 25.5 | 107 | 77,700 | Apr 13 | 18,800 |
| 2012-13 | 1,790 | 32 | 108 | 78,400 | Mar 08 | 8,670 |
| 2013-14 | 5,500 | 29.9 | 82.2 | 59,510 | Feb 28 | 17,100 |
| 2014-15 | 3,100 | 22.3 | 94.7 | 68,560 | Dec 12 | 11,900 |
| 2015-16 | 2,040 | 15.6 | 75.5 | 54,800 | Mar 06 | 13,000 |

M Data missing
* Record incomplete
E Estimate
N.D. Not determined
** Record not computed
+ Less than 0.05 acre feet or less than 0.05 cfs, but greater than 0

# RUNOFF – STREAM GAGING STATION PEAK FLOW

## LOS ANGELES RIVER at Tujunga Avenue.
## STATION NO. F300-R

| Season | Daily CFS | | | Total Runoff (Acre-feet) | Peak Flow | |
|---|---|---|---|---|---|---|
| | Maximum | Minimum | Mean | | Date | CFS |
| 2016-17 | 6,350 | 33.5 | 144 | 104,300 | Feb 17 | 23,700 |
| 2017-18 | 3,750 | 32.4 | 108 | 78,470 | Jan 09 | 10,300 |
| 2018-19 | 4,700 | 27.2 | 194 | 140,100 | Feb 02 | 22,100 |
| 2019-20 | 2,710 | 7.99 | 89.1 | 64,710 | Apr 06 | 17,600 |

M Data missing
* Record incomplete
E Estimate
N.D. Not determined
** Record not computed
+ Less than 0.05 acre feet or less than 0.05 cfs, but greater than 0

# RUNOFF – STREAM GAGING STATION PEAK FLOW

## LOS ANGELES RIVER above Arroyo Seco
## STATION NO. F57C-R

| Season | Daily CFS | | | Total Runoff | Peak Flow | |
|---|---|---|---|---|---|---|
| | Maximum | Minimum | Mean | (Acre-feet) | Date | CFS |
| 1930-31 | 927 | 0 | 5.5 | 3,950 | Feb 04 | 4,540 |
| 1931-32 | 2,520 | 0 | 21 | 15,240 | Feb 08 | 3,020 |
| 1932-33 | 2,330 | 0 | 14.7 | 10,640 | Jan 19 | 5,780 |
| 1933-34 | 5,990 | 0 | 41.2 | 29,810 | Jan 01 | 22,000 |
| 1934-35 | 568 | 0.1 | 17.3 | 12,550 | Apr 08 | 2,400E |
| 1935-36 | 322 | 0.4 | 7.9 | 5,770 | Mar 30 | 2,540 |
| 1936-37 | 1,670 | 0.4 | 33.8 | 24,470 | Feb 06 | 2,410E |
| 1937-38 | 27,900 | 0.6 | 183 | 132,600 | Mar 02 | 68,000E |
| 1938-39 | 1,950 | 3.8 | 58.5 | 42,360 | Jan 05 | 3,710 |
| 1939-40 | 2,070 | 6 | 54.5 | 39,590 | Jan 08 | 8,900 |
| 1940-41 | 6,700 | 4.2 | 228 | 165,000 | Feb 20 | 11,900 |
| 1941-42 | 1,170 | 22 | 75.7 | 54,800 | Dec 10 | 5,260 |
| 1942-43 | 7,120 | 15 | 172 | 124,400 | Jan 23 | 23,900 |
| 1943-44 | 8,020 | 25 | 151 | 109,800 | Feb 22 | 14,600 |
| 1944-45 | 1,160 | 6.5 | 51.1 | 36,990 | Feb 02 | 4,900 |
| 1945-46 | 1,880 | 3.4 | 49.6 | 35,880 | Dec 22 | 5,240 |
| 1946-47 | 896 | 1.6 | 43.3 | 31,330 | Dec 25 | 5,320 |
| 1947-48 | 498 | 3.6 | 20.5 | 14,890 | Mar 24 | 4,900 |
| 1948-49 | 451 | 4.2 | 24.3 | 17,600 | Dec 17 | 1,530 |
| 1949-50 | 804 | 0.3 | 14.9 | 10,760 | Feb 06 | 2,840 |
| 1950-51 | 487 | 0.5 | 10.8 | 7,840 | Jan 11 | 3,600 |
| 1951-52 | 8,130 | 0.5 | 149 | 108,000 | Jan 16 | 25,300 |
| 1952-53 | 1,370 | 0.6 | 25.5 | 18,480 | Dec 20 | 7,270 |
| 1953-54 | 2,570 | 0.2 | 29 | 21,000 | Feb 13 | 9,580 |
| 1954-55 | 1,510 | 0.2 | 25.2 | 18,270 | Jan 18 | 6,850 |
| 1955-56 | 7,290 | 0.6 | 49.4 | 35,890 | Jan 26 | 15,300 |
| 1956-57 | 2,390 | 0.2 | 34.4 | 24,890 | Feb 23 | 22,200 |
| 1957-58 | 4,650 | 0.4 | 126 | 91,020 | Feb 19 | 19,700 |
| 1958-59 | 3,790 | 0.2 | 27.6 | 20,230 | Jan 06 | 17,200 |
| 1959-60 | 1,420 | + | 23.3 | 16,910 | Jan 12 | 8,960 |
| 1960-61 | 1,690 | + | 16.6 | 12,000 | Nov 05 | 7,890 |
| 1961-62 | 8,510 | + | 120 | 86,910 | Feb 12 | 32,500 |
| 1962-63 | 3,750 | + | 32.4 | 23,440 | Feb 09 | 18,100 |

M Data missing
* Record incomplete
E Estimate
N.D. Not determined
** Record not computed
\+ Less than 0.05 acre feet or less than 0.05 cfs, but greater than 0

# RUNOFF – STREAM GAGING STATION PEAK FLOW

## LOS ANGELES RIVER above Arroyo Seco
## STATION NO. F57C-R

| Season | Daily CFS | | | Total Runoff | Peak Flow | |
|---|---|---|---|---|---|---|
| | Maximum | Minimum | Mean | (Acre-feet) | Date | CFS |
| 1963-64 | 1,950 | + | 27.9 | 20,320 | Jan 22 | 12,200 |
| 1964-65 | 2,880 | + | 49.1 | 35,580 | Apr 09 | 12,500 |
| 1965-66 | 12,600 | 0.1 | 149 | 107,500 | Dec 29 | 32,000 |
| 1966-67 | 7,720 | 0.4 | 115 | 82,210 | Nov 07 | 32,100 |
| 1967-68 | 4,780 | 3.4 | 82.2 | 59,710 | Mar 08 | 30,900 |
| 1968-69 | 23,400 | 4 | 425 | 307,400 | Jan 25 | 41,800 |
| 1969-70 | 2,760 | 6.9 | 65.6 | 47,520 | Mar 04 | 17,000 |
| 1970-71 | 12,900 | 7.4 | 129 | 93,310 | Nov 29 | 41,500 |
| 1971-72 | 4,830 | 5.4 | 64.3 | 46,690 | Dec 27 | 15,900 |
| 1972-73 | 9,190 | 6.7 | 157 | 114,000 | Jan 18 | 28,230 |
| 1973-74 | 12,480 | 5.8 | 123 | 88,900 | Jan 07 | 24,540 |
| 1974-75 | 5,750 | 4.2 | 88.6 | 64,120 | Dec 04 | 27,570 |
| 1975-76 | 3,230 | 2.7 | 54.7 | 39,720 | Feb 09 | 13,900 |
| 1976-77 | 4,710 | 1.6 | 91.2 | 66,020 | Jan 03 | 23,300 |
| 1977-78 | 22,700 | 5.4 | 506.5 | 366,663 | Feb 10 | 52,700 |
| 1978-79 | 6,240 | 18.8 | 192 | 139,101 | Mar 27 | 25,800 |
| 1979-80 | 16,800 | 11 | 428.6 | 303,340 | Feb 16 | 52,200 |
| 1980-81 | 3,340 | 14.9 | 104.9 | 75,932 | Jan 29 | 28,200 |
| 1981-82 | 5,870 | 11 | 137.4 | 99,441 | Mar 14 | 22,800 |
| 1982-83 | 25,100 | 22.2 | 560.4 | 405,695 | Jan 27 | 44,500 |
| 1983-84 | 4,030 | 23 | 96.2 | 69,861 | Dec 25 | 17,000 |
| 1984-85 | 3,380 | 30 | 98.3 | 71,160 | Dec 19 | 9,270 |
| 1985-86 | 5,110 | 59 | 214.2 | 155,103 | Jan 31 | 25,400 |
| 1986-87 | 2,090 | 70.2 | 101.5 | 73,480 | Nov 17 | 13,000 |
| 1987-88 | No Record | | | | | |
| 1988-89 | No Record | | | | | |
| 1989-90 | No Record | | | | | |
| 1990-91 | No Record | | | | | |
| 1991-92 | 20,200 | 3.7 | 463 | 320,800 | Feb 12 | 45,700 |
| 1992-93 | * | * | * | * | | * |
| 1993-94 | * | * | * | * | | * |
| 1994-95 | 19,900 | 114 | * | * | Mar 10 | 44,900 |
| 1995-96 | * | * | * | * | | * |

M Data missing
* Record incomplete
E Estimate
N.D. Not determined
** Record not computed
+ Less than 0.05 acre feet or less than 0.05 cfs, but greater than 0

# RUNOFF – STREAM GAGING STATION PEAK FLOW

## LOS ANGELES RIVER above Arroyo Seco
## STATION NO. F57C-R

| Season | Daily CFS | | | Total Runoff (Acre-feet) | Peak Flow | |
|---|---|---|---|---|---|---|
| | Maximum | Minimum | Mean | | Date | CFS |
| 1996-97 | 3,760 | 86 | 213 | 154,100 | Dec 09 | 17,900 |
| 1997-98 | 13,900 | 88 | 479 | 346,700 | Feb 23 | 37,800 |
| 1998-99 | 1,520 | 85 | 159 | 113,900 | Jan 31 | 11,600 |
| 1999-00 | 4,370 | 82 | 196 | 142,200 | Feb 23 | 25,200 |
| 2000-01 | 8,010 | 102 | 261 | 188,900 | Jan 11 | 37,500 |
| 2001-02 | 2,543 | 65.1 | 166.7 | 120,659 | Nov 24 | 20,272 |
| 2002-03 | 13,050 | 87.3 | 257 | 185,887 | Feb 12 | 32,900 |
| 2003-04 | 6,564 | 90.2 | 187 | 135,871 | Feb 26 | 28,100 |
| 2004-05 | 17,500 | 73 | 691 | 500,000 | Feb 20 | 35,800 |
| 2005-06 | 5,820 | 66 | 217 | 156,800 | Jan 02 | 25,329 |
| 2006-07 | 2,500 | 82 | 131.9 | 95,501 | Sep 22 | 7,956 |
| 2007-08 | 6,830 | 57.3 | 243.4 | 176,715 | Jan 04 | 27,092 |
| 2008-09 | 3,380 | 32.8 | 140 | 101,200 | Feb 05 | 21,500 |
| 2009-10 | 5,890 | 68.6 | 215 | 155,700 | Feb 06 | 32,500 |
| 2010-11 | 11,500 | 75.5 | 243 | 176,100 | Mar 20 | 28,600 |
| 2011-12 | 2,680 | 46.1 | 150 | 108,900 | Apr 13 | 22,200 |
| 2012-13 | 2,350 | 68.2 | 133 | 96,370 | Mar 08 | 11,500 |
| 2013-14 | 6,130 | 69.8 | 140 | 101,400 | Feb 28 | 6,810 |
| 2014-15 | 5,760 | 59.2 | 166 | 119,900 | Sep 15 | 30,700 |
| 2015-16 | 3,250 | 60.5 | 135 | 98,130 | Mar 06 | 22,100 |
| 2016-17 | 7,840 | 0 | 227 | 164,200 | Feb 17 | 33,600 |
| 2017-18 | 4,120 | 39.8 | 131 | 94,830 | Jan 09 | 11,400 |
| 2018-19 | 5,590 | 47.7 | 253 | 183,100 | Feb 02 | 34,500 |
| 2019-20 | 3,900 | 22.3 | 128 | 93,150 | Apr 06 | 21,100 |

M Data missing
* Record incomplete
E Estimate
N.D. Not determined
** Record not computed
+ Less than 0.05 acre feet or less than 0.05 cfs, but greater than 0

# RUNOFF – STREAM GAGING STATION PEAK FLOW

**MALIBU CREEK below Cold Creek.**
**STATION NO. F130-R**

| Season | Daily CFS | | | Total Runoff (Acre-feet) | Peak Flow | |
|---|---|---|---|---|---|---|
| | Maximum | Minimum | Mean | | Date | CFS |
| 1930-31 | * | * | * | 1,920* | Feb 04 | 723 |
| 1931-32 | 1,770 | + | 20.2 | 14,670 | Feb 09 | 3,100 |
| 1932-33 | 1,100 | 0.1 | 12.7 | 9,190 | Jan 19 | 4,460 |
| 1933-34 | 3,160 | 0.1 | 17.1 | 12,370 | Jan 01 | 9,650 |
| 1934-35 | 511 | + | 8.6 | 6,220 | | N.D. |
| 1935-36 | 92 | 0 | 3.2 | 2,310 | Feb 23 | 147 |
| 1936-37 | 1,680 | 0 | 33.1 | 23,940 | Feb 14 | 2,760 |
| 1937-38 | 5,090E | 0.2 | 47.1 | 34,100 | Mar 02 | 10,000E |
| 1938-39 | 139 | 0 | 6.4 | 4,630 | Dec 20 | 331 |
| 1939-40 | 335 | + | 8.4 | 6,100 | Feb 02 | 690 |
| 1940-41 | 2,200 | 0.1 | 101 | 73,220 | Feb 20 | 3,620 |
| 1941-42 | 32 | 0.1 | 2.5 | 1,820 | Dec 28 | 140 |
| 1942-43 | 5,370 | 0.1 | 65.8 | 47,600 | Jan 22 | 12,200 |
| 1943-44 | 3,400 | 0.7 | 41.6 | 30,170 | Feb 22 | 7,700 |
| 1944-45 | 210 | 0.2 | 5.8 | 4,240 | Feb 02 | 516 |
| 1945-46 | 267 | 0.1 | 5.2 | 3,800 | Mar 30 | 506 |
| 1946-47 | 142 | 0.1 | 5.3 | 3,820 | Nov 13 | 980 |
| 1947-48 | 15 | + | 0.2 | 177 | Mar 24 | 113 |
| 1948-49 | 1 | + | 0.1 | 90 | May 18 | 1 |
| 1949-50 | 64 | 0 | 0.7 | 477 | Feb 06 | 674 |
| 1950-51 | 0 | 0 | 0.1 | 56 | Jan 11 | 3 |
| 1951-52 | 6,720 | 0 | 80.2 | 58,200 | Mar 15 | 13,600 |
| 1952-53 | 81 | + | 4 | 2,940 | Nov 15 | 322 |
| 1953-54 | 655 | 0.1 | 6.9 | 4,990 | Feb 13 | 2,250 |
| 1954-55 | 16 | 0.1 | 1 | 758 | Jan 18 | 45 |
| 1955-56 | 1,260 | 0.1 | 6.5 | 4,680 | Jan 26 | 3,600 |
| 1956-57 | 12 | + | 0.6 | 444 | Feb 23 | 46 |
| 1957-58 | 1,630 | + | 43.7 | 31,660 | Apr 03 | 4,260 |
| 1958-59 | 114 | 0.1 | 2.1 | 1,510 | Jan 06 | 3,180 |
| 1959-60 | 17 | + | 0.7 | 504 | Apr 27 | 84 |
| 1960-61 | 2 | + | 0.1 | 99 | Jan 26 | 8 |
| 1961-62 | 3,920 | + | 36.3 | 26,150 | Feb 10 | 7,060 |
| 1962-63 | 24 | + | 1 | 701 | Mar 16 | 104 |

M Data missing
* Record incomplete
E Estimate
N.D. Not determined
** Record not computed
+ Less than 0.05 acre feet or less than 0.05 cfs, but greater than 0

# RUNOFF – STREAM GAGING STATION PEAK FLOW

**MALIBU CREEK below Cold Creek.**
**STATION NO. F130-R**

| Season | Daily CFS | | | Total Runoff (Acre-feet) | Peak Flow | |
|---|---|---|---|---|---|---|
| | Maximum | Minimum | Mean | | Date | CFS |
| 1963-64 | 17 | + | 0.5 | 384 | Jan 22 | 65 |
| 1964-65 | 148 | + | 2.2 | 1,560 | Apr 09 | 521 |
| 1965-66 | 7,060 | 0.2 | 51.8 | 37,520 | Dec 29 | 20,600 |
| 1966-67 | 2,710 | 0.9 | 35.5 | 25,700 | Jan 24 | 10,200 |
| 1967-68 | 1,350 | 1 | 18.5 | 13,430 | Mar 08 | 3,830 |
| 1968-69 | 24,200 | 1.4 | 166 | 119,900 | Jan 25 | 33,800 |
| 1969-70 | 368 | 0.5 | 9.9 | 7,200 | Mar 04 | 1,150 |
| 1970-71 | 1,480 | 1.2 | 23.7 | 17,300 | Dec 19 | 7,390 |
| 1971-72 | 582 | 0.9 | 6 | 4,340 | Dec 27 | 2,120 |
| 1972-73 | 3,340 | 0.8 | 35.1 | 25,400 | Feb 11 | 7,480 |
| 1973-74 | 2,240 | 2.7 | 22 | 15,910 | Jan 07 | 5,100 |
| 1974-75 | 519 | 2.3 | 15.2 | 11,020 | Dec 04 | 2,670 |
| 1975-76 | 163 | 1.1 | 5.4 | 3,910 | Feb 09 | 339 |
| 1976-77 | 315 | 1.1 | 6.9 | 4,980 | Jan 07 | 597 |
| 1977-78 | 7,620 | 1.7 | 112.4 | 80,990 | Mar 04 | 19,400 |
| 1978-79 | 1,220 | 2.3 | 46.4 | 33,408 | Mar 27 | 4,420 |
| 1979-80 | * | * | * | * | Feb 16 | * |
| 1980-81 | 357 | 1.7 | 13.5 | 9,832 | Mar 05 | 910 |
| 1981-82 | 400 | 2.2 | 13.9 | 10,031 | Mar 17 | 676 |
| 1982-83 | 7,720 | 2.7 | 121.8 | 88,148 | Mar 01 | 24,200 |
| 1983-84 | 758 | 2.5 | 24.1 | 17,411 | Dec 25 | 1,840 |
| 1984-85 | 588 | 0.9 | 16.6 | 12,002 | Dec 19 | 880 |
| 1985-86 | 1,480 | 1.4 | 39.3 | 27,881 | Feb 15 | 5,880 |
| 1986-87 | 216 | 0.5 | 8.6 | 6,236 | Nov 18 | 653 |
| 1987-88 | 559 | 0.6 | 24 | 17,337 | Feb 28 | 1,680 |
| 1988-89 | 257 | 1.6 | 12.3 | 8,876 | Feb 09 | 441 |
| 1989-90 | * | * | * | * | | * |
| 1990-91 | 982 | 0.8 | 20.5 | 14,872 | Mar 19 | 3,150 |
| 1991-92 | 5,850 | 2 | 92.7 | 67,330 | Feb 10 | 23,300 |
| 1992-93 | * | * | * | * | | * |
| 1993-94 | 880 | 0.9 | 16.7 | 11,090 | Feb 20 | 2,450 |
| 1994-95 | 4,530 | 3.1 | 97.8 | 68,700 | Mar 11 | 15,700 |
| 1995-96 | 637 | 1.5 | 12.9 | 9,395 | Feb 21 | 1,220 |

M Data missing
* Record incomplete
E Estimate
N.D. Not determined
** Record not computed
+ Less than 0.05 acre feet or less than 0.05 cfs, but greater than 0

# RUNOFF – STREAM GAGING STATION PEAK FLOW

**MALIBU CREEK below Cold Creek.**
**STATION NO. F130-R**

| Season | Daily CFS | | | Total Runoff (Acre-feet) | Peak Flow | |
|---|---|---|---|---|---|---|
| | Maximum | Minimum | Mean | | Date | CFS |
| 1996-97 | 807 | 3.2 | 43.1 | 31,180 | Dec 09 | 1,800 |
| 1997-98 | 4,020 | 2.4 | 113 | 81,700 | Feb 07 | 19,100 |
| 1998-99 | 134 | 2.8 | 10.3 | 7,430 | Apr 11 | 761 |
| 1999-00 | 701 | 1.4 | 22.6 | 16,440 | Feb 23 | 2,380 |
| 2000-01 | 3,950 | 0.6 | 53.8 | 38,920 | Mar 06 | 10,900 |
| 2001-02 | 93 | 0.9 | 10.6 | 7,670 | Nov 24 | 413 |
| 2002-03 | 1,979 | 1.9 | 25.9 | 18,761 | Feb 12 | 5,410 |
| 2003-04 | 1,470 | 1.2 | 13 | 9,442 | Feb 26 | 5,130 |
| 2004-05 | 7,330 | 1.3 | | 103,000 | Jan 09 | 12,700 |
| 2005-06 | 845 | 3.1 | 31.9 | 23,120 | Jan 02 | 2,586 |
| 2006-07 | 80 | 0.7 | 10.1 | 7,309 | Feb 22 | 189 |
| 2007-08 | 1,940 | 0.9 | 32.4 | 23,510 | Jan 27 | 3,851 |
| 2008-09 | 521 | 0.8 | 13.4 | 9,710 | Feb 16 | 1,350 |
| 2009-10 | 816 | 1.97 | 27 | 19,530 | Jan 20 | 2,970 |
| 2010-11 | 2,010 | 1.94 | 40.8 | 29,530 | Mar 20 | 6,490 |
| 2011-12 | 320 | 0.86 | 11.9 | 8,660 | Apr 13 | 1,030 |
| 2012-13 | 148 | 0.95 | 8.14 | 5,890 | Jan 24 | 296 |
| 2013-14 | 646 | 0.9 | 7.07 | 5,120 | Feb 28 | 1,550 |
| 2014-15 | 554 | 1.26 | 9.36 | 6,780 | Dec 12 | 2,130 |
| 2015-16 | 174 | 0.68 | 6.51 | 4,720 | Jan 05 | 496 |
| 2016-17 | 3,180 | 1.41 | 45.7 | 33,090 | Feb 17 | 16,900 |
| 2017-18 | 219 | 1.16 | 7.14 | 5,170 | Mar 21 | 775 |
| 2018-19 | 1,590 | 1.75 | 53.1 | 38,420 | Feb 02 | 7,940 |
| 2019-20 | 680 | 2.29 | 23.5 | 17,040 | Dec 26 | 2,300 |

M Data missing
* Record incomplete
E Estimate
N.D. Not determined
** Record not computed
+ Less than 0.05 acre feet or less than 0.05 cfs, but greater than 0

# RUNOFF – STREAM GAGING STATION PEAK FLOW

**MESCAL CREEK at mouth of canyon.**
**STATION NO. F395-R**

| Season | Daily CFS | | | Total Runoff (Acre-feet) | Peak Flow | |
|---|---|---|---|---|---|---|
| | Maximum | Minimum | Mean | | Date | CFS |
| 1982-83* | 72 | 0 | 5.2 | 3,795 | Mar 01 | 120 |
| 1983-84 | 17 | 0 | 2.6 | 1,905 | Dec 25 | 35 |
| 1984-85 | 2 | 0 | 0.2 | 140 | Dec 27 | 8 |
| 1985-86 | 41 | 0 | 1.1 | 794 | Feb 15 | 115 |
| 1986-87 | 2 | 0 | 0.1 | 39 | Mar 07 | 8 |
| 1987-88 | 5 | 0 | 0.4 | 325 | | |
| 1988-89 | 4 | 0 | 0.2 | 121 | Mar 04 | 16 |
| 1989-90* | 4 | 0 | 0.1 | 27 | | |
| 1990-91 | 21 | 0 | 8.4 | 512 | | |
| 1991-92* | 60 | 0 | 2.1 | 1,235 | | |
| 1992-93* | 153 | 0 | 11.4 | 4,538 | | |
| 1993-94 | NO RECORD | | | | | |
| 1994-95 | 69 | 0 | 3 | 2,184 | Mar 05 | 132 |
| 1995-96* | 14 | 0 | 0.5 | 369 | Apr 08 | 127 |
| 1996-97 | 17 | 0 | 0.4 | 264 | Jan 26 | 40 |
| 1997-98 | 71 | 0 | 4.2 | 3,050 | Feb 23 | 174 |
| 1998-99 | 1 | 0 | 0.1 | 104 | Jul 14 | 3 |
| 1999-00* | 2 | 0 | 0.2 | 124 | Feb 21 | 4 |
| 2000-01 | 14 | 0 | 1.3 | 952 | May 21 | 15 |
| 2001-02 | 1 | 0 | 0 | 1 | Nov 24 | 8 |
| 2002-03 | 0 | 0 | 0.2 | 0 | Sep 03 | 247 |
| 2003-04 | 4 | 0 | 0.1 | 75 | Dec 25 | 23 |
| 2004-05 | 209 | 0 | 8.3 | 5,980 | Jan 09 | 370 |
| 2005-06 | 11 | 0.1 | 1.7 | 1,130 | Dec 31 | 121 |
| 2006-07 | 0 | 0 | 0.1 | 10 | Oct 01 | 0 |
| 2007-08 | 138 | 0 | 8.9 | 6,430 | Apr 03 | 139 |
| 2008-09 | 8 | 0 | 0.9 | 655 | Jan 27 | 27 |
| 2009-10 | 24 | 0 | 1.96 | 1,420 | Apr 06 | 28 |
| 2010-11 | 241 | 0 | 14 | 10,110 | Dec 12 | 261 |
| 2011-12 | 6 | 0 | 1.2 | 869 | Dec 07 | 6 |
| 2012-13 | 1 | 0 | 0.09 | 65 | Nov 08 | 4 |
| 2013-14 | 9.14 | 0 | 0.25 | 181 | Feb 28 | 36.8 |
| 2014-15 | 5.28 | 0 | 0.21 | 150 | Jul 19 | 25.6 |

M Data missing
* Record incomplete
E Estimate
N.D. Not determined
** Record not computed
+ Less than 0.05 acre feet or less than 0.05 cfs, but greater than 0

# RUNOFF – STREAM GAGING STATION PEAK FLOW

**MESCAL CREEK at mouth of canyon.**
**STATION NO. F395-R**

| Season | Daily CFS | | | Total Runoff (Acre-feet) | Peak Flow | |
|---|---|---|---|---|---|---|
| | Maximum | Minimum | Mean | | Date | CFS |
| 2015-16 | 6.01 | 0 | 0.14 | 103 | Feb 17 | 14.1 |
| 2016-17 | 14.6 | 0 | 1.14 | 826 | Jan 24 | 36.8 |
| 2017-18 | 1.09 | 0 | 0.051 | 37 | Mar 22 | 5.33 |
| 2018-19 | 82 | 0 | 2.36 | 1710 | Feb 14 | 140 |
| 2019-20 | 9.3 | 0 | 1.76 | 1280 | Mar 12 | 16 |

M Data missing
* Record incomplete
E Estimate
N.D. Not determined
** Record not computed
+ Less than 0.05 acre feet or less than 0.05 cfs, but greater than 0

# RUNOFF – STREAM GAGING STATION PEAK FLOW

**MINT CANYON CREEK at Sierra Highway.**
**STATION NO. F328B-R**

| Season | Daily CFS | | | Total Runoff (Acre-feet) | Peak Flow | |
|---|---|---|---|---|---|---|
| | Maximum | Minimum | Mean | | Date | CFS |
| 2003-04 | 9 | 0 | 0 | 51 | Feb 26 | 20 |
| 2004-05 | 229 | 0 | 2.7 | 1,930 | Jan 09 | 550 |
| 2005-06 | 13 | 0 | 0.2 | 97 | Jan 02 | 155 |
| 2006-07 | 0 | 0 | 0.1 | 1 | Feb 19 | 10 |
| 2007-08 | 31 | 0 | 0.2 | 131 | Feb 17 | 150 |
| 2008-09 | 6 | 0 | 0.6 | 40 | Dec 15 | 43 |
| 2009-10 | 12 | 0 | 0.11 | 82 | Jan 18 | 148 |
| 2010-11 | 30 | 0 | 0.13 | 97 | Mar 20 | 268 |
| 2011-12 | 11 | 0 | 0.043 | 31 | Apr 13 | 249 |
| 2012-13 | 0 | 0 | 0 | 0.01 | Oct 11 | 0.29 |
| 2013-14 | 7.71 | 0 | 0.029 | 21 | Feb 28 | 155 |
| 2014-15 | 96.8 | 0 | 0.98 | 711 | Sep 15 | 352 |
| 2015-16 | 102 | 0 | 1.01 | 734 | Jan 05 | 598 |
| 2016-17 | 252 | 0 | 4.11 | 2,980 | Feb 11 | 777 |
| 2017-18 | 1.95 | 0 | 0.013 | 9 | Mar 22 | 34.1 |
| 2018-19 | 20.7 | 0 | 0.21 | 152 | Feb 02 | 483 |
| 2019-20 | 18.8 | 0 | 0.11 | 78 | Apr 06 | 187 |

M Data missing
* Record incomplete
E Estimate
N.D. Not determined
** Record not computed
+ Less than 0.05 acre feet or less than 0.05 cfs, but greater than 0

# RUNOFF – STREAM GAGING STATION PEAK FLOW

## MONTEBELLO STORM DRAIN above Rio Hondo.
## STATION NO. F181-R

| Season | Daily CFS | | | Total Runoff (Acre-feet) | Peak Flow | |
|---|---|---|---|---|---|---|
| | Maximum | Minimum | Mean | | Date | CFS |
| 1931-32 | * | 0 | * | 1,120* | Jan 31 | 531 |
| 1932-33 | 125 | 0 | 0.8 | 529 | Jan 19 | 713 |
| 1933-34 | 391 | 0 | 2.6 | 1,910 | Jan 01 | 1,360 |
| 1934-35 | 114 | 0 | 2.3 | 1,650 | Jan 05 | 1,140 |
| 1935-36 | 55 | 0 | 1.2 | 889 | Feb 14 | 374 |
| 1936-37 | NO RECORD | | | | | |
| 1937-38 | N.D. | N.D. | N.D. | N.D. | Mar 02 | 1,400E |
| 1938-39 | 147 | 0 | 1.4 | 981 | Sep 25 | 688 |
| 1939-40 | 77 | 0.1 | 1.2 | 885 | Feb 01 | 729 |
| 1940-41 | 204 | 0.1 | 5.6 | 4,090 | Mar 03 | 936 |
| 1941-42 | 102 | 0.1 | 1.3 | 962 | Dec 10 | 521 |
| 1942-43 | 300E | 0.1 | 3.6 | 2,580 | | N.D. |
| 1943-44 | 323E | 0.1 | 3.3 | 2,390 | Feb 22 | 1,040 |
| 1944-45 | 64 | 0.1E | 0.8 | 768 | Nov 11 | 506 |
| 1945-46 | 92 | 0 | 1.2 | 865 | Dec 22 | 384 |
| 1946-47 | 144 | 0.1 | 1.9 | 1,350 | Nov 13 | 1,240 |
| 1947-48 | 86 | 0.1 | 1.3 | 913 | Dec 05 | 1,220 |
| 1948-49 | 41 | 0.1 | 1.2 | 861 | Dec 17 | 347 |
| 1949-50 | 95 | 0.1 | 1.7 | 1,240 | Jan 08 | 790 |
| 1950-51 | 50 | 0.1 | 1.2 | 888 | Jan 10 | 333 |
| 1951-52 | 302 | 0.1 | 4.6 | 3,330 | Mar 07 | 1,010 |
| 1952-53 | 97 | 0.1 | 2 | 1,430 | Nov 15 | 770 |
| 1953-54 | 232 | 0.1 | 3 | 2,190 | Feb 13 | 1,010 |
| 1954-55 | * | * | * | 1,210* | Jan 18 | 759 |
| 1955-56 | 463 | + | 2.9 | 2,110 | Jan 26 | 856 |
| 1956-57 | 65 | + | 1.6 | 1,120 | Feb 28 | 570 |
| 1957-58 | 199 | + | 4.5 | 3,250 | Feb 19 | 865 |
| 1958-59 | 109 | 0.1 | 1.7 | 1,230 | Jan 06 | 869 |
| 1959-60 | 96 | 0.1 | 2.1 | 1,530 | Jan 12 | 784 |
| 1960-61 | 65 | 0.1 | 1.2 | 884 | Nov 26 | 478 |
| 1961-62 | 225 | 0.1 | 4.6 | 3,370 | Feb 12 | 783 |
| 1962-63 | 129 | 0.3 | 2.1 | 1,530 | Mar 16 | 851 |
| 1963-64 | 77 | 0.2 | 1.8 | 1,280 | Nov 19 | 553 |

M Data missing
* Record incomplete
E Estimate
N.D. Not determined
** Record not computed
+ Less than 0.05 acre feet or less than 0.05 cfs, but greater than 0

# RUNOFF – STREAM GAGING STATION PEAK FLOW

## MONTEBELLO STORM DRAIN above Rio Hondo.
## STATION NO. F181-R

| Season | Daily CFS | | | Total Runoff | Peak Flow | |
|---|---|---|---|---|---|---|
| | Maximum | Minimum | Mean | (Acre-feet) | Date | CFS |
| 1964-65 | 124 | + | 2.7 | 1,970 | Apr 09 | 844 |
| 1965-66 | 281 | 0.1 | 4.4 | 3,200 | Dec 29 | 904 |
| 1966-67 | 288 | 0.2 | 4.9 | 3,560 | Jan 24 | 1,060 |
| 1967-68 | 198 | 0.2 | 2.9 | 2,130 | Mar 08 | 923 |
| 1968-69 | 424 | 0.2 | 8.5 | 6,165 | Jan 25 | 1,600E |
| 1969-70 | 135 | + | 2.4 | 1,740 | Feb 10 | 792 |
| 1970-71 | 169 | + | 2.8 | 2,000 | Nov 29 | 833 |
| 1971-72 | 142 | 0.2 | 1.6 | 1,160 | Dec 24 | 637 |
| 1972-73 | 140 | 0.1 | 3.8 | 2,740 | Feb 27 | 811 |
| 1973-74 | 128 | + | 1.4 | 988 | Jan 07 | 546 |
| 1974-75 | 61 | + | 1 | 748 | Dec 04 | 608 |
| 1975-76 | 39 | + | 0.8 | 603 | Sep 11 | 240 |
| 1976-77 | 36 | 0 | 0.7 | 490 | May 08 | 226 |
| 1977-78 | 318 | 0 | 4.2 | 3,050 | Jan 16 | 991 |
| 1978-79 | 107 | 0 | 1.7 | 1,239 | Mar 27 | 619 |
| 1979-80 | 809 | 0 | 9.6 | 6,759 | | N.D. |
| 1980-81 | 53 | 0 | 0.7 | 515 | Mar 02 | 293 |
| 1981-82 | 62 | 0 | 1 | 728 | Nov 28 | 341 |
| 1982-83 | 630 | 0 | 6 | 4,319 | Mar 01 | 1,620 |
| 1983-84 | 32 | 0 | 6 | 455 | Oct 01 | 506 |
| 1984-85 | 44 | 0 | 0.9 | 644 | Dec 19 | 469 |
| 1985-86 | 78 | 0 | 1.4 | 1,327 | Feb 14 | 676 |
| 1986-87 | 39 | 0 | 0.5 | 391 | Oct 02 | 520 |
| 1987-88 | 81 | 0 | 1.1 | 775 | Jan 17 | 493 |
| 1988-89 | 30 | 0.1 | 1 | 726 | Dec 21 | 255 |
| 1989-90 | 110 | 0.1 | 1.1 | 767 | Feb 17 | 500 |
| 1990-91 | 75 | 0 | 1.3 | 907 | Feb 27 | 486 |
| 1991-92 | 183 | 0.1 | 2.2 | 1,565 | Feb 12 | 1,020 |
| 1992-93 | 204 | 0 | 4.6 | 3,364 | Dec 07 | 1,040 |
| 1993-94 | 48 | 0 | 0.7 | 536 | Mar 19 | 542 |
| 1994-95 | 131 | 0 | 4 | 2,896 | Jan 10 | 1,340 |
| 1995-96 | 134 | 0 | 1.1 | 792 | Feb 20 | 899 |
| 1996-97 | 35 | 0 | 1 | 745 | Jan 15 | 290 |

M Data missing
* Record incomplete
E Estimate
N.D. Not determined
** Record not computed
\+ Less than 0.05 acre feet or less than 0.05 cfs, but greater than 0

# RUNOFF – STREAM GAGING STATION PEAK FLOW

## MONTEBELLO STORM DRAIN above Rio Hondo.
## STATION NO. F181-R

| Season | Daily CFS | | | Total Runoff (Acre-feet) | Peak Flow | |
|---|---|---|---|---|---|---|
| | Maximum | Minimum | Mean | | Date | CFS |
| 1997-98 | 60 | + | 1.7 | 1,230 | Feb 06 | 658 |
| 1998-99 | 26 | 0 | 0.5 | 358 | Nov 28 | 214 |
| 1999-00 | 124 | 0.1 | 1.8 | 1,270 | Feb 23 | 254 |
| 2000-01 | 66 | + | 1.5 | 1,060 | Jan 12 | 641 |
| 2001-02 | 30 | 0 | 0.4 | 298 | Nov 24 | 472 |
| 2002-03 | 129 | 0 | 1.4 | 1,037 | Feb 12 | 644 |
| 2003-04 | 65 | 0 | 0.9 | 643 | Feb 25 | 663 |
| 2004-05 | 82 | 0.1 | 1 | 720 | Jan 09 | 190 |
| 2005-06 | 43 | 0.2 | 0.6 | 423 | Feb 07 | 56 |
| 2006-07 | 1 | 0.2 | 0.2 | 146 | Apr 20 | 17 |
| 2007-08 | 15 | 0.2 | 0.3 | 208 | Jan 05 | 126 |
| 2008-09 | 2 | 0 | 0.2 | 160 | Feb 05 | 22 |
| 2009-10 | 31 | 0 | 0.82 | 595 | Apr 11 | 45 |
| 2010-11 | 67 | 0.09 | 0.87 | 633 | Jan 30 | 194 |
| 2011-12 | 2 | 0.09 | 0.17 | 124 | Mar 17 | 24 |
| 2012-13 | 22 | 0.58 | 1.48 | 1,070 | Oct 11 | 35 |
| 2013-14 | 6.58 | 0 | 0.61 | 442 | Feb 28 | 28.5 |
| 2014-15 | 12.5 | 0 | 0.5 | 366 | Dec 12 | 25.1 |
| 2015-16 | 0.77 | 0 | 0.29 | 212 | Apr 04 | 0.77 |
| 2016-17 | 41.2 | 0 | 0.87 | 628 | Jan 22 | 57.5 |
| 2017-18 | 0 | 0 | 0 | 0 | Oct 01 | 0 |
| 2018-19 | 36 | 0 | 1.14 | 827 | Feb 02 | 519 |
| 2019-20 | 1.29 | 0 | 0.42 | 305 | Nov 24 | 8.34 |

M Data missing
* Record incomplete
E Estimate
N.D. Not determined
** Record not computed
\+ Less than 0.05 acre feet or less than 0.05 cfs, but greater than 0

# RUNOFF – STREAM GAGING STATION PEAK FLOW

**PACOIMA CREEK below Pacoima Dam.**
**STATION NO. F118C-R**

| Season | Daily CFS | | | Total Runoff (Acre-feet) | Peak Flow | |
|---|---|---|---|---|---|---|
| | Maximum | Minimum | Mean | | Date | CFS |
| 2011-12 | 76 | 0 | 4.43 | 2,440 | May 08 | 296 |
| 2012-13 | 53 | 0 | 0.59 | 428 | Apr 30 | 247 |
| 2013-14 | 84.4 | 0 | 0.76 | 549 | Oct 24 | 416 |
| 2014-15 | 9.0 | 0 | 0.043 | 31 | Apr 28 | 355 |
| 2015-16 | 98.4 | 0 | 2.23 | 1,620 | Nov 18 | 1,040 |
| 2016-17 | 166.0 | 0 | 11 | 7,980 | Apr 25 | 842 |
| 2017-18 | 76.8 | 0 | 2.67 | 1,930 | Apr 19 | 312 |
| 2018-19 | 410.0 | 0 | 22.5 | 16,270 | Feb 06 | 590 |
| 2019-20 | 78.5 | 0 | 6.21 | 4,510 | Nov 07 | 275 |

M Data missing
* Record incomplete
E Estimate
N.D. Not determined
** Record not computed
+ Less than 0.05 acre feet or less than 0.05 cfs, but greater than 0

# RUNOFF – STREAM GAGING STATION PEAK FLOW

## PACOIMA DIVERSION at Branford Street.
## STATION NO. F305-R

| Season | Daily CFS | | | Total Runoff (Acre-feet) | Peak Flow | |
|---|---|---|---|---|---|---|
| | Maximum | Minimum | Mean | | Date | CFS |
| 1953-54 | 116 | 0 | 1.4 | 976 | Feb 13 | 508 |
| 1954-55 | 53 | 0 | 1.2 | 872 | May 07 | 450 |
| 1955-56 | 194 | 0 | 1.6 | 1,123 | Jan 26 | 622 |
| 1956-57 | 57 | 0 | 1.2 | 842 | Jan 13 | 580 |
| 1957-58 | 326 | 0 | 8.9 | 6,390 | Feb 04 | 1,380 |
| 1958-59 | 163 | 0 | 1 | 691 | Jan 06 | 2,800 |
| 1959-60 | 46 | 0 | 1 | 690 | Jan 11 | 666 |
| 1960-61 | 86 | 0 | 1.3 | 910 | Nov 05 | 988 |
| 1961-62 | 104 | 0 | 1.4 | 988 | Feb 11 | 2,960 |
| 1962-63 | 78 | 0 | 1.2 | 883 | Apr 25 | 988 |
| 1963-64 | 150 | 0 | 1.5 | 1,116 | Jan 22 | 2,550 |
| 1964-65 | 62 | 0 | 1.7 | 1,206 | Apr 09 | 946 |
| 1965-66 | 614 | 0 | 8.6 | 6,144 | Nov 17 | 4,800 |
| 1966-67 | 312 | 0 | 6.3 | 4,562 | Jan 22 | 3,140 |
| 1967-68 | N.D. | | | | | |
| 1968-69 | N.D. | | | | | |
| 1969-70 | N.D. | | | | | |
| 1970-71 | N.D. | | | | | |
| 1971-72 | N.D. | | | | | |
| 1972-73 | N.D. | | | | | |
| 1973-74 | N.D. | | | | | |
| 1974-75 | 136 | 0.6 | 4.1 | 2,960 | Mar 06 | 1,590 |
| 1975-76 | 107 | 0.7 | 2.8 | 2,039 | Sep 05 | 2,580 |
| 1976-77 | 135 | 0.5 | 2.7 | 1,978 | Jan 03 | 2,860 |
| 1977-78 | 3,200 | 0.6 | 704.1 | 42,306 | Mar 04 | 3,730 |
| 1978-79 | 214 | 0.7 | 6.4 | 4,629 | Mar 28 | 4,090 |
| 1979-80 | 1,180 | 0.6 | 8.3 | 17,148 | | |
| 1980-81 | 162 | 0 | 3 | 2,146 | Jan 29 | 3,790 |
| 1981-82 | 250 | 0.2 | 3.7 | 2,709 | Mar 17 | 4,660 |
| 1982-83 | 4,280 | 0 | 60.8 | 44,045 | Mar 01 | 10,900 |
| 1983-84 | 69 | 0 | 2.6 | 1,921 | Oct 04 | 896 |
| 1984-85 | 65 | 0.1 | 1.5 | 1,104 | Dec 18 | 1,270 |
| 1985-86 | 134 | 0 | 3.2 | 2,280 | Jan 31 | 2,230 |

M Data missing
* Record incomplete
E Estimate
N.D. Not determined
** Record not computed
\+ Less than 0.05 acre feet or less than 0.05 cfs, but greater than 0

# RUNOFF – STREAM GAGING STATION PEAK FLOW

## PACOIMA DIVERSION at Branford Street.
## STATION NO. F305-R

| Season | Daily CFS | | | Total Runoff | Peak Flow | |
|---|---|---|---|---|---|---|
| | Maximum | Minimum | Mean | (Acre-feet) | Date | CFS |
| 1986-87 | 141 | 0 | 2.9 | 2,119 | Nov 17 | 2,260 |
| 1987-88 | 388 | 0.2 | 4.9 | 3,593 | Oct 22 | 7,470 |
| 1988-89 | 772 | 0.7 | 3.6 | 2,639 | Nov 14 | 740 |
| 1989-90 | 78 | 0.8 | 2.8 | 2,051 | Feb 04 | 1,050 |
| 1990-91 | M | M | M | M | | M |
| 1991-92 | 1,130 | 0.7 | 16.8 | 12,188 | Feb 04 | 9,700 |
| 1992-93 | 1,420 | 0.5 | 55.3 | 40,071 | Dec 07 | 6,470 |
| 1993-94 | 154 | 0.7 | 4.9 | 3,531 | Dec 11 | 3,190 |
| 1994-95 | 1,250 | 0 | 18.8 | 13,621 | Mar 10 | 7,250 |
| 1995-96 | 364 | 0.4 | 5.5 | 4,021 | Feb 21 | 3,700 |
| 1996-97 | 225 | 1.3 | 7 | 5,052 | Dec 22 | 4,700 |
| 1997-98 | 1,460 | 1 | 34.5 | 25,007 | Feb 07 | 13,600 |
| 1998-99 | 108 | 1.8 | 6.4 | 4,622 | Oct 29 | 3,350 |
| 1999-00* | 169 | 2.3 | 6.1 | 4,390 | Feb 20 | 3,740 |
| 2000-01 | 305 | 1.3 | 7 | 5,030 | Jan 11 | 6,130 |
| 2001-02 | 167 | 0.9 | 3.2 | 2,316 | Nov 24 | 5,895 |
| 2002-03 | 704 | 0.7 | 7.9 | 5,706 | Dec 16 | 6,060 |
| 2003-04 | 215 | 0.2 | 2.9 | 2,100 | Feb 26 | 2,260 |
| 2004-05 | 3,440 | 0.1 | 57.1 | 41,400 | Jan 09 | 10,100 |
| 2005-06 | 100 | 0.9 | 4.2 | 3,020 | Apr 01 | 1,560 |
| 2006-07 | 120 | 0.9 | 3.4 | 2,462 | Sep 22 | 2,186 |
| 2007-08 | 345 | 0.9 | 7.4 | 5,390 | Jan 04 | 2,082 |
| 2008-09 | 225 | 0 | 3.7 | 2,710 | Nov 26 | 2,620 |
| 2009-10 | 410 | 0.53 | 8.1 | 5,870 | Jan 20 | 4,510 |
| 2010-11 | 908 | 0.69 | 20.1 | 14,580 | Mar 20 | 8,970 |
| 2011-12 | 220 | 0.22 | 3.6 | 2,610 | Apr 13 | 6,630 |
| 2012-13 | 59 | 0.14 | 1.8 | 1,300 | Mar 08 | 1,270 |
| 2013-14 | 258 | 0 | 1.69 | 1,220 | Feb 28 | 1,690 |
| 2014-15 | 160 | 0 | 1.95 | 1,410 | Dec 12 | 1,690 |
| 2015-16 | 92 | 0 | 1.76 | 1,270 | Jan 05 | 1,690 |
| 2016-17 | 45 | 0.03 | 1.3 | 874 | Feb 03 | 424 |
| 2017-18 | 123 | 0 | 1.86 | 1,350 | Mar 22 | 1,290 |
| 2018-19 | 468 | 0.1 | 12.9 | 9,350 | Dec 06 | 1,710 |

M Data missing
* Record incomplete
E Estimate
N.D. Not determined
** Record not computed
+ Less than 0.05 acre feet or less than 0.05 cfs, but greater than 0

# RUNOFF – STREAM GAGING STATION PEAK FLOW

## PACOIMA DIVERSION at Branford Street.
## STATION NO. F305-R

| Season | Daily CFS | | | Total Runoff (Acre-feet) | Peak Flow | |
|---|---|---|---|---|---|---|
| | Maximum | Minimum | Mean | | Date | CFS |
| 2019-20 | 205 | 0 | 4.23 | 3,070 | Dec 26 | 1,720 |

M Data missing
* Record incomplete
E Estimate
N.D. Not determined
** Record not computed
+ Less than 0.05 acre feet or less than 0.05 cfs, but greater than 0

# RUNOFF – STREAM GAGING STATION PEAK FLOW

## PALLETT CREEK at Valyermo Highway.
## STATION NO. F122-R

| Season | Daily CFS | | | Total Runoff (Acre-feet) | Peak Flow | |
|---|---|---|---|---|---|---|
| | Maximum | Minimum | Mean | | Date | CFS |
| 1961-62 | 92 | 0 | 0.4 | 311 | Feb 11 | 259 |
| 1962-63 | 1 | 0 | 0.3 | 190 | Feb 09 | 3 |
| 1963-64 | 0 | 0 | 0 | 0 | | 0 |
| 1964-65 | 0 | 0 | + | 1 | Aug 12 | 16 |
| 1965-66 | 53 | 0 | 1.5 | 1,110 | Dec 29 | 176 |
| 1966-67 | 4 | 0.3 | 0.8 | 618 | Dec 06 | 7 |
| 1967-68 | 5 | 0.3 | 0.8 | 615 | Nov 21 | 10 |
| 1968-69 | 770 | 0.3 | 7.8 | 5,640 | Feb 25 | 1,480 |
| 1969-70 | 37 | 0.6 | 1.2 | 846 | Feb 28 | 161 |
| 1970-71 | 183 | 0.1 | 1 | 744 | Nov 29 | 839 |
| 1971-72 | 56 | 0.1 | 0.6 | 452 | Dec 25 | 282 |
| 1972-73 | 7 | + | 0.2 | 156 | Feb 11 | 24 |
| 1973-74 | 1 | 0.1 | 0.3 | 213 | Dec 11 | 1 |
| 1974-75 | 2 | 0 | 0.2 | 140 | Dec 04 | 10 |
| 1975-76 | 3 | 0 | 0.1 | 87 | Sep 24 | 51 |
| 1976-77 | 3 | 0 | 0.1 | 39 | May 08 | 10 |
| 1977-78 | 1,220 | 0 | 33.4 | 24,170 | Feb 10 | 1,630 |
| 1978-79 | 156 | 0.6 | 5.9 | 4,312 | Mar 29 | 191 |
| 1979-80 | 210 | 0 | 7.6 | 5,487 | Feb 16 | 1,470 |
| 1980-81 | 16 | 0 | 1.7 | 1,193 | Mar 01 | 60 |
| 1981-82 | 13 | 0 | 0.6 | 423 | Apr 11 | 49 |
| 1982-83 | 454 | 0 | 11.9 | 8,626 | Mar 01 | 831 |
| 1983-84 | 15 | 0.2 | 1.8 | 1,282 | Jul 30 | 147 |
| 1984-85 | 12 | 0 | 0.4 | 292 | Dec 27 | 14 |
| 1985-86 | 37 | 0 | 0.9 | 622 | Jan 30 | 124 |
| 1986-87 | 2 | 0 | 0.4 | 264 | Feb 25 | 3 |
| 1987-88 | 22 | 0 | 0.3 | 245 | | N.D. |
| 1988-89 | 1 | 0 | 0.1 | 105 | Dec 16 | 1 |
| 1989-90 | 0 | 0 | 0 | 0 | | 0 |
| 1990-91 | 0 | 0 | 0 | 0 | | 0 |
| 1991-92 | 240 | 0 | 4.9 | 3,570 | Feb 12 | 670 |
| 1992-93 | 498 | 0.4 | 15.2 | 10,980 | Feb 24 | 621 |
| 1993-94 | 2 | 0.2 | 1 | 645 | | N.D. |

M Data missing
* Record incomplete
E Estimate
N.D. Not determined
** Record not computed
\+ Less than 0.05 acre feet or less than 0.05 cfs, but greater than 0

# RUNOFF – STREAM GAGING STATION PEAK FLOW

**PALLETT CREEK at Valyermo Highway.**
**STATION NO. F122-R**

| Season | Daily CFS | | | Total Runoff (Acre-feet) | Peak Flow | |
|---|---|---|---|---|---|---|
| | Maximum | Minimum | Mean | | Date | CFS |
| 1994-95 | 133 | 0 | 6.8 | 4,934 | Mar 11 | 579 |
| 1995-96 | 2 | 0 | 0.7 | 534 | Jul 24 | 14 |
| 1996-97 | 0 | 0 | 0.1 | 90 | Feb 08 | 0 |
| 1997-98 | 47 | 0 | 5.1 | 3,680 | Feb 23 | 231 |
| 1998-99 | 3 | 0.1 | 0.9 | 655 | Nov 28 | 6 |
| 1999-00 | 9 | 0 | 0.2 | 115 | Feb 20 | 76 |
| 2000-01 | 4 | 0 | 0.7 | 513 | Jan 02 | 45 |
| 2001-02 | 1 | 0 | 0.3 | 223 | Nov 12 | 1 |
| 2002-03 | 0 | 0 | 0.2 | 0 | Feb 12 | 65 |
| 2003-04 | 3 | 0 | 0.2 | 126 | Feb 26 | 15 |
| 2004-05 | 300 | 0 | 12.7 | 9,160 | Jan 09 | 1,330 |
| 2005-06 | 20 | 1.4 | 2.5 | 1,700 | Feb 28 | 50 |
| 2006-07 | 2 | 0.1 | 1.3 | 682 | Oct 05 | 2 |
| 2007-08 | 115 | 0 | 1.6 | 1,186 | Jan 27 | 207 |
| 2008-09 | 5 | + | 0.8 | 580 | Oct 06 | 5 |
| 2009-10 | 9 | 0 | 1.3 | 954 | Jan 21 | 27 |
| 2010-11 | 249 | 1.24 | 5.48 | 3,960 | Dec 22 | 402 |
| 2011-12 | 44 | 0 | 1.37 | 997 | Sep 09 | 487 |
| 2012-13 | 5 | 0 | 0.028 | 20 | Oct 11 | 12 |
| 2013-14 | 109 | 0 | 0.48 | 347 | Feb 28 | 337 |
| 2014-15 | 3 | 0 | 0.009 | 7 | Jul 30 | 59 |
| 2015-16 | 0 | 0 | 0 | 0 | Oct 01 | 0 |
| 2016-17 | 60 | 0 | 0.25 | 182 | Feb 17 | 246 |
| 2017-18 | 0 | 0 | 0 | 0 | Oct 01 | 0 |
| 2018-19 | 221 | 0 | 2.11 | 1,530 | Feb 14 | 572 |
| 2019-20 | 100 | 0.08 | 1.75 | 1,270 | Apr 07 | 225 |

M Data missing
* Record incomplete
E Estimate
N.D. Not determined
** Record not computed
\+ Less than 0.05 acre feet or less than 0.05 cfs, but greater than 0

# RUNOFF – STREAM GAGING STATION PEAK FLOW

## RIO HONDO above Stuart and Gray Road.
## STATION NO. F45B-R

| Season | Daily CFS | | | Total Runoff (Acre-feet) | Peak Flow | |
|---|---|---|---|---|---|---|
| | Maximum | Minimum | Mean | | Date | CFS |
| 1927-28 | * | 0 | * | 269* | Mar 06 | 4* |
| 1928-29 | 248 | 0 | 3.4 | 2,460 | Apr 04 | 912 |
| 1929-30 | 285 | 0 | 2.8 | 2,000 | Mar 15 | 743 |
| 1930-31 | 335 | 0 | 2.6 | 1,900 | Feb 04 | 841 |
| 1931-32 | 3,440 | 0 | 27.4 | 19,920 | Feb 09 | 4,610 |
| 1932-33 | 971 | 0 | 6.2 | 4,450 | Jan 19 | 2,730 |
| 1933-34 | 5,810 | 0 | 23.5 | 17,030 | Jan 01 | 16,000 |
| 1934-35 | 667 | 0 | 8.3 | 6,000 | Apr 08 | 3,450 |
| 1935-36 | 472 | 0 | 5.8 | 4,220 | Feb 12 | 3,160 |
| 1936-37 | 1,460 | 0 | 37.1 | 26,870 | Feb 14 | 4,800 |
| 1937-38 | 12,700 | 0 | 238 | 172,100 | Mar 03 | 24,400E |
| 1938-39 | 910 | 0 | 13.2 | 9,540 | Dec 18 | 5,260 |
| 1939-40 | 442 | 0 | 6.7 | 4,850 | Jan 08 | 1,930 |
| 1940-41 | 3,690 | 0 | 129 | 93,260 | Mar 04 | 6,420 |
| 1941-42 | 564 | 0 | 9.3 | 6,730 | Dec 10 | 4,240 |
| 1942-43 | 4,660 | 0 | 57.9 | 41,910 | Jan 23 | 11,800 |
| 1943-44 | 2,570E | 0 | 36.9 | 26,820 | Feb 22 | 6,670 |
| 1944-45 | 492 | 0 | 11.7 | 8,460 | Nov 11 | 4,500 |
| 1945-46 | 1,130 | 0 | 15.6 | 11,280 | Dec 22 | 4,270 |
| 1946-47 | 923 | 0 | 22.1 | 16,030 | Nov 13 | 5,950 |
| 1947-48 | 425 | 0 | 4.8 | 3,510 | Mar 24 | 2,880 |
| 1948-49 | 268 | 0 | 2.1 | 1,490 | Jan 20 | 713 |
| 1949-50 | 402 | 0 | 3.9 | 2,840 | Jan 08 | 1,790 |
| 1950-51 | 135 | 0 | 1.1 | 781 | Jan 29 | 1,080 |
| 1951-52 | 2,430 | 0 | 35.9 | 26,040 | Jan 16 | 9,040 |
| 1952-53 | 571 | 0 | 4.8 | 3,450 | Nov 15 | 4,600 |
| 1953-54 | 1,780 | 0 | 14.9 | 10,760 | Feb 13 | 8,860 |
| 1954-55 | 753 | 0 | 11.1 | 8,000 | Jan 18 | 4,160 |
| 1955-56 | 4,910 | 0 | 20 | 14,540 | Jan 26 | 11,600 |
| 1956-57 | 967 | 0 | 6.4 | 4,640 | Feb 23 | 6,560 |
| 1957-58 | 2,230 | 0 | 41.8 | 30,260 | Feb 19 | 10,800 |
| 1958-59 | 915 | 0 | 5.4 | 3,900 | Jan 06 | 11,000 |

M Data missing
* Record incomplete
E Estimate
N.D. Not determined
** Record not computed
+ Less than 0.05 acre feet or less than 0.05 cfs, but greater than 0

# RUNOFF – STREAM GAGING STATION PEAK FLOW

## RIO HONDO above Stuart and Gray Road.
## STATION NO. F45B-R

| Season | Daily CFS | | | Total Runoff (Acre-feet) | Peak Flow | |
|---|---|---|---|---|---|---|
| | Maximum | Minimum | Mean | | Date | CFS |
| 1959-60 | 219 | 0 | 3.3 | 2,370 | Jan 12 | 3,030 |
| 1960-61 | 115 | 0 | 1.2 | 831 | Nov 26 | 2,090 |
| 1961-62 | 2,080 | 0 | 31.4 | 22,780 | Feb 19 | 7,100 |
| 1962-63 | 620 | 0 | 4.5 | 3,280 | Feb 09 | 4,240 |
| 1963-64 | 190 | 0 | 2.4 | 1,730 | Jan 22 | 2,060 |
| 1964-65 | 1,130 | 0 | 7.3 | 5,310 | Apr 09 | 8,780 |
| 1965-66 | 4,810 | + | 95.8 | 69,390 | Dec 29 | 19,000 |
| 1966-67 | 5,210 | + | 26.6 | 21,530 | Jan 24 | 20,100 |
| 1967-68 | 4,300 | + | 25.3 | 18,360 | Mar 08 | 17,900 |
| 1968-69 | 23,100 | + | 424 | 307,100 | Jan 25 | 46,900 |
| 1969-70 | 964 | + | 10 | 7,220 | Feb 28 | 7,540 |
| 1970-71 | 2,430 | + | 13.1 | 9,520 | Nov 29 | 9,350 |
| 1971-72 | 2,420 | + | 6 | 4,409 | Dec 24 | 11,400 |
| 1972-73 | 2,550 | + | 21.9 | 15,860 | Feb 11 | 15,180 |
| 1973-74 | 3,360 | + | 15.4 | 11,180 | Jan 07 | 11,710 |
| 1974-75 | 303 | + | 9.5 | 6,910 | Dec 04 | 13,250 |
| 1975-76 | 920 | + | 9.4 | 6,660 | Sep 11 | 9,820 |
| 1976-77 | 619 | 0 | 6.9 | 5,020 | Oct 23 | 2,890 |
| 1977-78 | 13,800 | + | 270 | 195,463 | Mar 01 | 32,000 |
| 1978-79 | 4,600 | 0.5 | 46.5 | 33,662 | Mar 27 | 25,600 |
| 1979-80 | 16,000 | 0.5 | 313.4 | 221,877 | Feb 16 | 48,100 |
| 1980-81 | 2,050 | 0 | 13.2 | 9,539 | Mar 01 | 13,500 |
| 1981-82 | 4,410 | 0 | 28.7 | 20,768 | Nov 28 | 17,100 |
| 1982-83 | 20,600 | 0 | 236.5 | 172,592 | Mar 01 | 38,400 |
| 1983-84 | 2,600 | 0 | 17.2 | 12,502 | Oct 01 | 9,480 |
| 1984-85 | 1,400 | 0 | 14.1 | 10,216 | Feb 09 | 7,130 |
| 1985-86 | 4,500 | 0 | * | * | Feb 15 | 19,400 |
| 1986-87 | 1,730 | 0.1 | 8.6 | 6,256 | Jan 04 | 10,000 |
| 1987-88 | 2,660 | 0 | 16.7 | 12,111 | Jan 17 | 11,300 |
| 1988-89 | 1,280 | 0.1 | 12.4 | 8,967 | Dec 21 | 6,050 |
| 1989-90 | 5,030 | 0.1 | 16.9 | 12,222 | Feb 17 | 17,500 |
| 1990-91 | 3,880 | 0 | 34.1 | 24,720 | Feb 27 | 19,600 |

M Data missing
* Record incomplete
E Estimate
N.D. Not determined
** Record not computed
+ Less than 0.05 acre feet or less than 0.05 cfs, but greater than 0

# RUNOFF – STREAM GAGING STATION PEAK FLOW

**RIO HONDO above Stuart and Gray Road.**
**STATION NO. F45B-R**

| Season | Daily CFS | | | Total Runoff | Peak Flow | |
|---|---|---|---|---|---|---|
| | Maximum | Minimum | Mean | (Acre-feet) | Date | CFS |
| 1991-92 | 6,930 | 0.1 | 56.7 | 41,160 | Feb 12 | 32,000 |
| 1992-93 | 11,200 | 0 | 386 | 279,400 | Feb 18 | 32,800 |
| 1993-94 | 260 | 0 | 10 | 7,222 | Mar 19 | 4,240 |
| 1994-95 | 10,500 | 0.1 | 164 | 119,100 | Jan 10 | 37,400 |
| 1995-96 | 6,320 | 0 | 40.3 | 29,240 | Feb 20 | 20,200 |
| 1996-97 | 3,420 | 0.1 | 30.7 | 22,230 | Jan 25 | 13,300 |
| 1997-98 | 9,700 | 0 | 178 | 129,200 | Feb 08 | 34,700 |
| 1998-99 | 417 | 0 | 3.9 | 2,850 | Nov 08 | 2,360 |
| 1999-00 | 2,960 | + | * | * | Feb 23 | 14,600 |
| 2000-01 | Under | Construct | since | May 2000. | | |
| 2001-02 | * | * | * | * | Mar 17 | 421 |
| 2002-03 | 4,490 | 0 | 49.9 | 36,130 | Sep 29 | 52 |
| 2003-04 | 4,756 | 0 | 20 | 14,410 | Feb 26 | 25,100 |
| 2004-05 | 22,400 | 0 | 424 | 307,000 | Jan 09 | 41,600 |
| 2005-06 | 2,140 | 0 | 9.7 | 7,010 | Jan 02 | 4,280 |
| 2006-07 | 262 | 0 | 1.5 | 1,066 | Sep 22 | 1,348 |
| 2007-08 | 2,750 | 0 | 25 | 18,162 | Jan 05 | 6,780 |
| 2008-09 | 598 | + | 6.8 | 4,930 | Dec 15 | 1,910 |
| 2009-10 | 4,030 | 0 | 30.5 | 22,060 | Feb 06 | 7,600 |
| 2010-11 | 7,150 | 0 | 72.3 | 52,310 | Dec 20 | 28,800 |
| 2011-12 | 1,930 | 0 | 10.6 | 7,670 | Oct 05 | 8,600 |
| 2012-13 | 339 | 0 | 4.01 | 2,910 | Oct 11 | 2,260 |
| 2013-14 | 277 | 0 | 2.06 | 1,490 | Feb 28 | 1,460 |
| 2014-15 | 241 | 0 | 2.66 | 1,920 | Dec 02 | 3,030 |
| 2015-16 | 83 | 0 | 0.34 | 244 | Jan 05 | 516 |
| 2016-17 | 14,100 | 0 | 62 | 44,880 | Feb 17 | 16,800 |
| 2017-18 | 716 | 0 | 2.55 | 1,850 | Jan 09 | 4,080 |
| 2018-19 | 4,520 | 0.01 | 27.8 | 20,160 | Feb 14 | 10,300 |
| 2019-20 | 2,370 | 0 | 9.22 | 6,690 | Dec 26 | 11,000 |

M Data missing
* Record incomplete
E Estimate
N.D. Not determined
** Record not computed
+ Less than 0.05 acre feet or less than 0.05 cfs, but greater than 0

# RUNOFF – STREAM GAGING STATION PEAK FLOW

## RIO HONDO below Lower Azusa Avenue.
## STATION NO. F192B-R

| Season | Daily CFS | | | Total Runoff | Peak Flow | |
|---|---|---|---|---|---|---|
| | Maximum | Minimum | Mean | (Acre-feet) | Date | CFS |
| 1931-32 | * | * | * | 12,710* | | N.D. |
| 1932-33 | 937 | 0 | 5.2 | 3,800 | Jan 20 | 5,160 |
| 1933-34 | 2,700 | 0 | 11.2 | 8,110 | Jan 01 | 5,860 |
| 1934-35 | 324 | 0 | 11.3 | 8,160 | Apr 08 | 604 |
| 1935-36 | 114 | 0 | 4.7 | 3,400 | Feb 11 | 391 |
| 1936-37 | 904 | 0 | 38.6 | 27,960 | Feb 20 | 1,030 |
| 1937-38 | 10,500 | 0 | 241 | 174,300 | Mar 02 | 31,000 |
| 1938-39 | 191 | 0 | 2.2 | 1,570 | Jan 05 | 680 |
| 1939-40 | 224 | 0 | 5 | 3,640 | Jan 07 | 288 |
| 1940-41 | 2,220 | 0 | 113 | 81,450 | Mar 04 | 4,000 |
| 1941-42 | 214 | 0.1 | 2.7 | 1,980 | Dec 10 | 254 |
| 1942-43 | 1,300 | 0 | 14.7 | 10,680 | Jan 23 | 3,500 |
| 1943-44 | 502 | 0.3 | 15.9 | 11,600 | Feb 22 | 1,080 |
| 1944-45 | 112 | 0.1 | 1.9 | 1,380 | Nov 11 | 1,060 |
| 1945-46 | 267 | 0 | 18 | 13,030 | Dec 23 | 483 |
| 1946-47 | 279 | 0 | 11.8 | 8,560 | Nov 27 | 283 |
| 1947-48 | 570 | 0 | 7.2 | 5,250 | Jun 07 | 584 |
| 1948-49 | 5 | 0 | 0.1 | 71 | Feb 27 | 50 |
| 1949-50 | 24 | 0 | 0.3 | 203 | Dec 18 | 124 |
| 1950-51 | 24 | 0 | 0.3 | 234 | Jan 11 | 636 |
| 1951-52 | 753 | 0 | 8.7 | 6,340 | Jan 16 | 2,180 |
| 1952-53 | 785 | 0 | 9 | 6,550 | Nov 15 | 944 |
| 1953-54 | 654 | 0 | 14.9 | 10,800 | Feb 13 | 1,740 |
| 1954-55 | 184 | 0 | 2 | 1,460 | Jan 18 | 2,340 |
| 1955-56 | 1,020 | 0 | 4 | 2,940 | Jan 26 | 3,030 |
| 1956-57 | 390 | 0 | 5.9 | 4,280 | Feb 23 | 2,270 |
| 1957-58 | 735 | 0 | 32.6 | 23,610* | Feb 19 | 1,530 |
| 1958-59 | 218 | 0 | 1.8 | 1,290* | Jan 06 | 1,530 |
| 1959-60 | 30 | 0 | 0.4 | 303 | Jan 12 | 185 |
| 1960-61 | 16 | 0 | 0.2 | 131 | Nov 05 | 132 |
| 1961-62 | 630 | 0 | 13.1 | 9,460 | Feb 12 | 856 |
| 1962-63 | 28 | 0 | 0.3 | 221 | Mar 16 | 182 |
| 1963-64 | 22 | 0 | 0.3 | 187 | Jan 21 | 296 |

M Data missing
* Record incomplete
E Estimate
N.D. Not determined
** Record not computed
+ Less than 0.05 acre feet or less than 0.05 cfs, but greater than 0

# RUNOFF – STREAM GAGING STATION PEAK FLOW

**RIO HONDO below Lower Azusa Avenue.**
**STATION NO. F192B-R**

| Season | Daily CFS | | | Total Runoff | Peak Flow | |
|---|---|---|---|---|---|---|
| | Maximum | Minimum | Mean | (Acre-feet) | Date | CFS |
| 1964-65 | 32 | 0 | 0.5 | 340 | Apr 09 | 397 |
| 1965-66 | 261 | 0 | 7.7 | 5,570 | Nov 24 | 1,440 |
| 1966-67 | 175 | 0 | 14.7 | 10,620 | Jan 22 | 438 |
| 1967-68 | 61 | 0 | 0.8 | 576 | Mar 08 | 714 |
| 1968-69 | 4,380 | 0 | 100 | 72,550 | Jan 25 | 10,600 |
| 1969-70 | 251 | 0 | 5 | 3,580 | Mar 04 | 1,160 |
| 1970-71 | 95 | 0 | 4.2 | 3,060 | Nov 29 | 446 |
| 1971-72 | 5 | 0 | 0.3 | 210 | Dec 24 | 266 |
| 1972-73 | 270 | 0 | 14.5 | 10,520 | Feb 27 | 2,390 |
| 1973-74 | 144 | 0 | 5.1 | 3,720 | Jan 07 | 196 |
| 1974-75 | 54 | + | 0.7 | 538 | Dec 04 | 643 |
| 1975-76 | 34 | 0 | 0.5 | 345 | Sep 11 | 635 |
| 1976-77 | 23 | 0 | 0.5 | 393 | May 09 | 230 |
| 1977-78 | 1,910 | 0 | 84.7 | 61,288 | Mar 01 | 3,210 |
| 1978-79 | 163 | 0 | 19.7 | 14,291 | Feb 21 | 311 |
| 1979-80 | 1,490 | 0 | 77.5 | 55,368 | Feb 16 | 3,050 |
| 1980-81 | 237 | 0 | 17.8 | 13,060 | Dec 16 | 3,070 |
| 1981-82 | 196 | 0 | 11.5 | 8,293 | Sep 23 | 342 |
| 1982-83 | 350 | 0 | 66.3 | 48,030 | Apr 18 | 350 |
| 1983-84 | 251 | 0 | 15.5 | 11,194 | Nov 01 | 303 |
| 1984-85 | 13 | 0 | 0.2 | 175 | Nov 08 | 216 |
| 1985-86 | 318 | 0 | 36.7 | 26,570 | Feb 15 | 357 |
| 1986-87 | 25 | 0 | 0.2 | 171 | Jan 04 | 296 |
| 1987-88 | 223 | 0 | 5.9 | 4,290 | Dec 04 | 350 |
| 1988-89 | 13 | 0 | 2.8 | 173 | Dec 15 | 109 |
| 1989-90 | 46 | 0 | 0.4 | 259 | Feb 17 | 236 |
| 1990-91 | 388 | 0 | 11.3 | 7,831 | Aug 01 | 356 |
| 1991-92 | 809 | 0 | 25.4 | 18,429 | Feb 13 | 3,860 |
| 1992-93 | 1,010 | 0 | 65.6 | 47,470 | Feb 19 | 3,190 |
| 1993-94 | 47 | 0 | 2.4 | 1,748 | Dec 14 | 272 |
| 1994-95 | 803 | 0 | 33.8 | 24,500 | Mar 11 | 3,210 |
| 1995-96 | 665 | 0 | 29.1 | 21,100 | Feb 21 | 1,400 |
| 1996-97 | 250 | 0 | 15.8 | 11,400 | Jan 26 | 634 |

M Data missing
* Record incomplete
E Estimate
N.D. Not determined
** Record not computed
\+ Less than 0.05 acre feet or less than 0.05 cfs, but greater than 0

# RUNOFF – STREAM GAGING STATION PEAK FLOW

**RIO HONDO below Lower Azusa Avenue.**
**STATION NO. F192B-R**

| Season | Daily CFS | | | Total Runoff (Acre-feet) | Peak Flow | |
|---|---|---|---|---|---|---|
| | Maximum | Minimum | Mean | | Date | CFS |
| 1997-98 | 1,270 | 0 | 35.4 | 25,610 | Feb 07 | 3,670 |
| 1998-99 | 125 | 0 | 3.2 | 2,290 | Nov 08 | 348 |
| 1999-00 | 33 | 0 | 0.6 | 455 | Apr 17 | 348 |
| 2000-01 | 37 | 0 | 0.5 | 391 | Jan 11 | 318 |
| 2001-02 | 104 | 0 | 2.6 | 1,794 | Nov 24 | 1,035 |
| 2002-03 | 81 | 0 | 1.4 | 981 | Dec 16 | 565 |
| 2003-04 | 62 | 0 | 1.5 | 1,121 | Feb 26 | 437 |
| 2004-05 | 1,310 | 0 | 88 | 63,700 | Feb 19 | 4,350 |
| 2005-06 | 212 | 0 | 9.2 | 6,660 | Oct 17 | 538 |
| 2006-07 | 215 | 0 | 4.1 | 1,869 | Feb 11 | 661 |
| 2007-08 | 203 | 0 | 9.2 | 6,678 | Jan 27 | 1,076 |
| 2008-09 | 281 | 0 | 7.7 | 5,550 | Feb 05 | 462 |
| 2009-10 | 75 | 0 | 3.7 | 2,700 | Feb 06 | 479 |
| 2010-11 | 712 | 0 | 55.6 | 40,260 | Dec 20 | 1,800 |
| 2011-12 | 309 | 0 | 14 | 10,170 | Nov 06 | 565 |
| 2012-13 | 11 | 0 | 0.23 | 168 | Mar 08 | 161 |
| 2013-14 | 30.5 | 0 | 0.2 | 144 | Mar 01 | 222 |
| 2014-15 | 24.6 | 0 | 0.31 | 222 | Dec 12 | 389 |
| 2015-16 | 59.3 | 0 | 0.41 | 300 | Jan 05 | 591 |
| 2016-17 | 299.0 | 0 | 23.2 | 16,790 | Jan 20 | 661 |
| 2017-18 | 5.3 | 0 | 0.059 | 42 | Mar 22 | 66 |
| 2018-19 | 594.0 | 0 | 41.7 | 30,220 | Feb 16 | 775 |
| 2019-20 | 333.0 | 0 | 27.6 | 20,040 | Apr 06 | 454 |

M Data missing
* Record incomplete
E Estimate
N.D. Not determined
** Record not computed
+ Less than 0.05 acre feet or less than 0.05 cfs, but greater than 0

# RUNOFF – STREAM GAGING STATION PEAK FLOW

## RIO HONDO BYPASS CHANNEL above Whittier Narrows
## STATION NO. F313B-R

| Season | Daily CFS | | | Total Runoff (Acre-feet) | Peak Flow | |
|---|---|---|---|---|---|---|
| | Maximum | Minimum | Mean | | Date | CFS |
| 1953-54 | 138 | 0 | 12 | 7,233 | | |
| 1954-55 | 169 | 0 | 19.6 | 9,750 | | |
| 1955-56 | 172 | 0 | 23.5 | 14,984 | | |
| 1956-57 | 168 | 0 | 27.5 | 19,965 | | |
| 1957-58 | 175 | 0 | 18.4 | 13,371 | | |
| 1958-59 | N.D. | | | | | |
| 1959-60 | N.D. | | | | | |
| 1960-61 | N.D. | | | | | |
| 1961-62 | 153 | 0 | 44.3 | 31,825 | | |
| 1962-63 | 137 | 0 | 12.5 | 9,121 | | |
| 1963-64 | N.D. | | | | | |
| 1964-65 | N.D. | | | | | |
| 1965-66 | N.D. | | | | | |
| 1966-67 | N.D. | | | | | |
| 1967-68 | N.D. | | | | | |
| 1968-69 | N.D. | | | | | |
| 1969-70 | N.D. | | | | | |
| 1970-71 | N.D. | | | | | |
| 1971-72 | N.D. | | | | | |
| 1972-73 | N.D. | | | | | |
| 1973-74 | N.D. | | | | | |
| 1974-75 | 145 | 0 | 46.8 | 33,880 | | |
| 1975-76 | 169 | 0 | 27.1 | 19,670 | | |
| 1976-77 | 138 | 0 | 7.8 | 5,641 | Jan 05 | 182 |
| 1977-78 | 165 | 0 | 33.5 | 24,288 | Sep 05 | 188 |
| 1978-79 | 184 | 0 | 63.6 | 46,015 | Aug 04 | 187 |
| 1979-80 | 165 | 0 | 24.1 | 17,524 | Oct 20 | 188 |
| 1980-81 | 134 | 0 | 67.9 | 49,193 | Jan 11 | 185 |
| 1981-82 | 127 | 0 | 31.4 | 22,760 | Oct 01 | 161 |
| 1982-83 | 92 | 0 | 7.9 | 5,750 | Jan 16 | 93 |
| 1983-84 | 85 | 0 | 14.4 | 4,341 | Dec 16 | 110 |
| 1984-85 | 150 | 0 | 52.5 | 38,014 | Mar 27 | 185 |
| 1985-86 | 183 | 0 | 16.5 | 11,946 | Jan 25 | 190 |

M Data missing
* Record incomplete
E Estimate
N.D. Not determined
** Record not computed
\+ Less than 0.05 acre feet or less than 0.05 cfs, but greater than 0

# RUNOFF – STREAM GAGING STATION PEAK FLOW

## RIO HONDO BYPASS CHANNEL above Whittier Narrows
## STATION NO. F313B-R

| Season | Daily CFS | | | Total Runoff (Acre-feet) | Peak Flow | |
|---|---|---|---|---|---|---|
| | Maximum | Minimum | Mean | | Date | CFS |
| 1986-87 | 177 | 0 | 67.3 | 48,539 | Mar 18 | 233 |
| 1987-88 | 178 | 0 | 40.3 | 29,308 | May 24 | 184 |
| 1988-89 | 192 | 0 | 80.4 | 58,223 | Jan 19 | 201 |
| 1989-90 | 193 | 0 | 78.4 | 56,729 | Jan 25 | 271 |
| 1990-91 | 174 | 0 | 27.8 | 20,195 | Oct 01 | 189 |
| 1991-92 | 116 | 0 | 24.3 | 17,613 | Feb 12 | 360 |
| 1992-93 | 165 | 0 | 29.3 | 21,195 | Feb 18 | 355 |
| 1993-94 | 155 | 1.3 | 48.6 | 35,158 | Jan 25 | 203 |
| 1994-95 | 136 | 0 | 15.5 | 11,242 | Jan 10 | 359 |
| 1995-96 | 111 | 0 | 30.6 | 22,232 | Feb 20 | 318 |
| 1996-97* | 184 | 0 | 34.6 | 25,061 | Jun 13 | 200 |
| 1997-98 | 200 | 0 | 31.6 | 22,865 | May 05 | 214 |
| 1998-99 | 122 | 0 | 35.7 | 25,854 | Jan 27 | 216 |
| 1999-00* | 182 | 0 | 51.8 | 37,609 | May 11 | 192 |
| 2000-01 | 159 | 0 | 23.7 | 17,130 | Apr 07 | 178 |
| 2001-02 | 174 | 0 | 68 | 49,259 | Dec 19 | 198 |
| 2002-03 | 227 | 0 | 70.2 | 50,862 | Dec 16 | 288 |
| 2003-04 | 192 | 0 | 36 | 27,686 | Feb 04 | 251 |
| 2004-05 | 192 | 0 | 26.1 | 18,900 | Nov 21 | 240 |
| 2005-06 | 198 | 0 | 51.4 | 37,210 | Mar 17 | 257 |
| 2006-07 | 221 | 0 | 107.7 | 44,840 | Dec 02 | 233 |
| 2007-08 | 149 | 0 | 21.1 | 15,342 | Jul 30 | 182 |
| 2008-09 | 94 | 0 | 6.6 | 4,750 | Feb 05 | 136 |
| 2009-10 | 205 | 0 | 46.8 | 33,870 | Feb 06 | 329 |
| 2010-11 | 201 | 0 | 39.4 | 28,420 | Oct 30 | 237 |
| 2011-12 | 78 | 0 | 19.9 | 14,420 | Feb 15 | 232 |
| 2012-13 | 94 | 0 | 16.7 | 12,120 | Dec 29 | 222 |
| 2013-14 | 59.9 | 0 | 7.05 | 5,110 | Oct 09 | 147 |
| 2014-15 | 8.5 | 0 | 0.76 | 549 | Mar 10 | 13 |
| 2015-16 | 186 | 0 | 22.4 | 16,240 | Dec 19 | 209 |
| 2016-17 | 183 | 0 | 28.3 | 20,480 | Jan 18 | 212 |
| 2017-18 | 204 | 0 | 10.5 | 7,590 | Dec 16 | 207 |
| 2018-19 | 111 | 0 | 6.82 | 4,940 | Feb 14 | 391 |

M Data missing
* Record incomplete
E Estimate
N.D. Not determined
** Record not computed
\+ Less than 0.05 acre feet or less than 0.05 cfs, but greater than 0

# RUNOFF – STREAM GAGING STATION PEAK FLOW

## RIO HONDO BYPASS CHANNEL above Whittier Narrows
## STATION NO. F313B-R

| Season | Daily CFS | | | Total Runoff (Acre-feet) | Peak Flow | |
|---|---|---|---|---|---|---|
| | Maximum | Minimum | Mean | | Date | CFS |
| 2019-20 | 31 | 0 | 5.73 | 4,160 | Dec 26 | 235 |

M Data missing
* Record incomplete
E Estimate
N.D. Not determined
** Record not computed
+ Less than 0.05 acre feet or less than 0.05 cfs, but greater than 0

# RUNOFF – STREAM GAGING STATION PEAK FLOW

## RUBIO DIVERSION CHANNEL below Gooseberry Inlet.
## STATION NO. F338-R

| Season | Daily CFS | | | Total Runoff | Peak Flow | |
|---|---|---|---|---|---|---|
| | Maximum | Minimum | Mean | (Acre-feet) | Date | CFS |
| 1959-60 | 1 | 0 | 0 | 9 | Jan 11 | 9 |
| 1960-61 | 1 | 0 | 0 | 6 | Jan 26 | 5 |
| 1961-62 | 8 | 0 | 0.1 | 62 | Feb 11 | 22 |
| 1962-63 | 3 | 0 | 0 | 20 | Feb 10 | 32 |
| 1963-64 | 1 | 0 | 0 | 14 | Jan 21 | 8 |
| 1964-65 | 1 | 0 | 0 | 30 | Nov 09 | 21 |
| 1965-66 | 18 | 0 | 0.3 | 206 | Dec 29 | 63 |
| 1966-67 | 13 | 0 | 0.2 | 127 | Jan 22 | 43 |
| 1967-68 | 18 | 0 | 0.2 | 112 | Nov 19 | 267 |
| 1968-69 | 254 | 0 | 4.2 | 3,050 | Jan 25 | 880 |
| 1969-70 | 12 | 0 | 0.4 | 272 | Feb 28 | 146 |
| 1970-71 | 36 | 0 | 0.6 | 413 | Nov 29 | 266 |
| 1971-72 | M | M | M | M | | M |
| 1972-73 | 58 | + | 1.5 | 1,098 | Jan 18 | 114 |
| 1973-74 | 23 | + | 2.8 | 1,994 | Nov 18 | 76 |
| 1974-75 | 11 | + | 0.9 | 627 | Mar 06 | 85 |
| 1975-76 | 13 | 0 | 0.6 | 431 | Feb 09 | 88 |
| 1976-77 | 5 | 0 | 0.5 | 384 | May 09 | 47 |
| 1977-78 | 76 | 0 | 3 | 2,141 | Mar 04 | 276 |
| 1978-79 | 5 | 0 | 0.7 | 494 | Mar 28 | 71 |
| 1979-80 | 108 | 0.2 | 8.9 | 6,438 | Feb 19 | 1,400 |
| 1980-81 | 13 | 0.4 | 3.6 | 2,598 | May 02 | 115 |
| 1981-82 | 21 | 0 | 2.1 | 1,519 | Apr 01 | 106 |
| 1982-83 | 150 | 0.2 | 3.1 | 2,391 | | 296 |
| 1983-84 | 17 | 0 | 1 | 740 | Oct 04 | 184 |
| 1984-85 | 10 | 0 | 0.5 | 332 | Jan 18 | 31 |
| 1985-86 | 8 | 0 | 7.8 | 463 | | N.D. |
| 1986-87 | NO RECORD | | | | | |
| 1987-88 | 9 | 0 | 0.7 | 526 | | N.D. |
| 1988-89 | 6 | 0 | 0.9 | 631 | Mar 25 | 6 |
| 1989-90 | 5 | 0 | 0.3 | 232 | | N.D. |
| 1990-91 | 16 | 0 | 0.3 | 249 | Mar 01 | 16 |
| 1991-92 | 45 | 0 | 2.2 | 1,592 | Feb 10 | 191 |

M Data missing
* Record incomplete
E Estimate
N.D. Not determined
** Record not computed
\+ Less than 0.05 acre feet or less than 0.05 cfs, but greater than 0

# RUNOFF – STREAM GAGING STATION PEAK FLOW

## RUBIO DIVERSION CHANNEL below Gooseberry Inlet.
## STATION NO. F338-R

| Season | Daily CFS | | | Total Runoff (Acre-feet) | Peak Flow | |
|---|---|---|---|---|---|---|
| | Maximum | Minimum | Mean | | Date | CFS |
| 1992-93 | * | * | * | * | | * |
| 1993-94 | * | * | * | * | | * |
| 1994-95 | 72 | 0 | 2.8 | 2,056 | Feb 14 | 170 |
| 1995-96 | 41 | 0 | 1.6 | 1,139 | Feb 20 | 131 |
| 1996-97 | 6 | 0 | 0.8 | 601 | Sep 25 | 31 |
| 1997-98 | 10 | 0 | 1.5 | 1,050 | Mar 02 | 106 |
| 1998-99 | 27 | 0 | 1.4 | 1,030 | Mar 15 | 179 |
| 1999-00 | 6 | 0.2 | 0.5 | 360 | Feb 16 | 94 |
| 2000-01 | 37 | 0 | 1.1 | 822 | Jan 11 | 179 |
| 2001-02 | 3 | 0 | 0.4 | 203 | Dec 20 | 89 |
| 2002-03 | 4 | 0 | 0.1 | 93 | Mar 15 | 49 |
| 2003-04 | 6 | 0 | 0.1 | 80 | Feb 26 | 55 |
| 2004-05 | 68 | 0 | 1.5 | 1,100 | Jan 09 | 270 |
| 2005-06 | 34 | 0.2 | 2.4 | 1,730 | Apr 14 | 194 |
| 2006-07 | 12 | 0 | 0.8 | 537 | Apr 20 | 115 |
| 2007-08 | 20 | 0 | 1.3 | 939 | Jan 04 | 226 |
| 2008-09 | 8 | 0 | 0.3 | 186 | Nov 26 | 112 |
| 2009-10 | 11 | 0 | 0.45 | 328 | Feb 06 | 191 |
| 2010-11 | 32 | 0 | 1.08 | 782 | Dec 22 | 149 |
| 2011-12 | 5 | 0 | 0.13 | 95 | Mar 17 | 106 |
| 2012-13 | 2 | 0 | 0.11 | 82 | Oct 11 | 69 |
| 2013-14 | 3.12 | 0 | 0.046 | 33 | Feb 28 | 24.3 |
| 2014-15 | 4.98 | 0 | 0.1 | 74 | Dec 12 | 183 |
| 2015-16 | 3.06 | 0 | 0.085 | 62 | Mar 07 | 49.5 |
| 2016-17 | 8.76 | 0 | 0.36 | 256 | Jan 12 | 87.7 |
| 2017-18 | 6.77 | 0 | 0.1 | 75 | Jan 09 | 79.2 |
| 2018-19 | 15.4 | 0 | 0.46 | 332 | Mar 20 | 489 |
| 2019-20 | 10.5 | 0 | 0.32 | 234 | Apr 06 | 188 |

M Data missing
* Record incomplete
E Estimate
N.D. Not determined
** Record not computed
+ Less than 0.05 acre feet or less than 0.05 cfs, but greater than 0

# RUNOFF – STREAM GAGING STATION PEAK FLOW

## RUBIO WASH at Glendon Way.
## STATION NO. F82C-R

| Season | Daily CFS | | | Total Runoff | Peak Flow | |
|---|---|---|---|---|---|---|
| | Maximum | Minimum | Mean | (Acre-feet) | Date | CFS |
| 1930-31 | 107 | 0 | 1.5 | 1,110 | Feb 03 | 1,690 |
| 1931-32 | 124 | 0 | 2.1 | 1,490 | Nov 27 | 798 |
| 1932-33 | 234 | 0 | 1.5 | 1,110 | Jan 16 | 1,510 |
| 1933-34 | 684 | 0 | 3.6 | 2,580 | Dec 31 | 2,070 |
| 1934-35 | 134 | 0 | 2.4 | 1,770 | Oct 17 | 1,680 |
| 1935-36 | 81 | 0 | 1.8 | 1,280 | Feb 22 | 1,370 |
| 1936-37 | 186 | 0 | 3.9 | 2,800 | Dec 27 | 1,180 |
| 1937-38 | 802 | 0 | 5.8 | 4,180 | Mar 02 | 2,400E |
| 1938-39 | 250 | 0 | 3.3 | 2,370 | Jan 05 | 1,720 |
| 1939-40 | 122 | 0 | 2.4 | 1,270 | Jan 07 | 1,000 |
| 1940-41 | 200 | 0 | 8.1 | 5,890 | Mar 03 | 1,940 |
| 1941-42 | 130 | 0 | 2.1 | 1,530 | Dec 10 | 1,200 |
| 1942-43 | 697 | 0 | 6.2 | 4,520 | Mar 04 | 2,780 |
| 1943-44 | 393 | 0 | 4.4 | 3,190 | Feb 22 | 1,930 |
| 1944-45 | 152 | 0 | 2.1 | 1,540 | Nov 11 | 1,780 |
| 1945-46 | 244 | 0 | 2.5 | 1,840 | Dec 22 | 1,630 |
| 1946-47 | 233 | 0 | 3.2 | 2,300 | Nov 13 | 2,650 |
| 1947-48 | 91 | 0 | 1.5 | 1,080 | Mar 24 | 2,090 |
| 1948-49 | 59 | 0 | 1.5 | 1,080 | Oct 30 | 530 |
| 1949-50 | 161 | 0 | 2.3 | 1,690 | Feb 06 | 1,060 |
| 1950-51 | 80 | 0 | 1.4 | 1,010 | Jan 11 | 2,290 |
| 1951-52 | 335 | 0 | 7.3 | 5,300 | Jan 16 | 3,020 |
| 1952-53 | 133 | 0 | 2 | 1,460 | Nov 15 | 2,200 |
| 1953-54 | 288 | + | 3.4 | 2,490 | Jan 19 | 2,310 |
| 1954-55 | 126 | + | 2.6 | 1,870 | Jan 18 | 1,290 |
| 1955-56 | 639 | 0 | 4 | 2,880 | Jan 26 | 1,970 |
| 1956-57 | 199 | + | 3.2 | 2,290 | Feb 23 | 2,980 |
| 1957-58 | 286 | 0.1 | 7.7 | 5,610 | Feb 19 | 2,740 |
| 1958-59 | 218 | 0.2 | 2.8 | 2,030 | Jan 06 | 2,780 |
| 1959-60 | 135 | 0.2 | 2.5 | 1,820 | Jan 11 | 985 |
| 1960-61 | 117 | 0.2 | 1.8 | 1,270 | Nov 06 | 902 |
| 1961-62 | 281 | 0.1 | 5.7 | 4,120 | Jan 20 | 1,200 |
| 1962-63 | 246 | 0.1 | 2.4 | 1,760 | Feb 09 | 1,180 |

M Data missing
* Record incomplete
E Estimate
N.D. Not determined
** Record not computed
\+ Less than 0.05 acre feet or less than 0.05 cfs, but greater than 0

# RUNOFF – STREAM GAGING STATION PEAK FLOW

## RUBIO WASH at Glendon Way.
## STATION NO. F82C-R

| Season | Daily CFS | | | Total Runoff | Peak Flow | |
|---|---|---|---|---|---|---|
| | Maximum | Minimum | Mean | (Acre-feet) | Date | CFS |
| 1963-64 | 136 | 0.2 | 2.6 | 1,870 | Jan 21 | 1,570 |
| 1964-65 | 164 | 0.1 | 2.8 | 2,030 | Apr 09 | 2,040 |
| 1965-66 | 466 | 0.1 | 6.4 | 4,650 | Nov 24 | 2,300 |
| 1966-67 | 344 | 0.2 | 7.2 | 5,220 | Dec 03 | 2,040 |
| 1967-68 | 343 | 0.2 | 4 | 2,930 | Mar 08 | 2,460 |
| 1968-69 | 712 | 0.2 | 11.4 | 8,220 | Jan 25 | 2,890 |
| 1969-70 | ** | ** | ** | ** | Feb 28 | 2,540 |
| 1970-71 | ** | ** | ** | ** | Nov 29 | 3,700 |
| 1971-72 | ** | ** | ** | ** | Dec 24 | 1,240 |
| 1972-73 | 410 | 0 | 7.0* | 5,041* | Feb 11 | 3,166 |
| 1973-74 | 460 | 0.2 | 5.5 | 3,950 | Jan 07 | 1,985 |
| 1974-75 | 328 | 0.3 | 4.5 | 3,240 | Dec 04 | 3,180 |
| 1975-76 | 373 | 0.2 | 4.1 | 2,920 | Sep 10 | 2,070 |
| 1976-77 | 180 | 0.1 | 4.4 | 3,187 | Oct 23 | 2,610 |
| 1977-78 | 531 | 0 | 12.9 | 9,340 | Feb 10 | * |
| 1978-79 | 176 | 0 | 8.4 | 6,056 | Feb 21 | 2,680 |
| 1979-80 | 781 | 0 | 11.8 | 8,372 | Jan 29 | 4,594 |
| 1980-81 | 205 | 0 | 4.3 | 3,108 | Mar 01 | 1,754 |
| 1981-82 | 186 | 0 | 4 | 2,890 | Mar 17 | 1,650 |
| 1982-83 | 620 | 0.1 | 12.6 | 9,079 | Mar 02 | 4,560 |
| 1983-84 | 165 | 0.1 | 2.8 | 1,976 | Dec 25 | 1,680 |
| 1984-85 | 154 | 0.1 | 3.5 | 2,543 | Dec 19 | 1,610 |
| 1985-86 | 212 | 0.1 | 6.1 | 4,445 | Mar 08 | 2,090 |
| 1986-87 | 153 | 0.2 | 3.6 | 2,580 | Oct 02 | 2,790 |
| 1987-88 | 246 | 0 | 4.3 | 3,113 | Dec 04 | 3,620 |
| 1988-89 | 123 | 0.1 | 2.9 | 2,122 | Dec 15 | 783 |
| 1989-90 | 341 | 0.3 | 4.5 | 3,249 | Jan 16 | 1,560 |
| 1990-91 | 355 | 0 | 4.9 | 3,513 | Mar 01 | 1,840 |
| 1991-92 | 287 | 0 | 5.7 | 4,115 | Feb 12 | 2,540 |
| 1992-93 | 323 | 0 | 7.9 | 5,726 | Jan 14 | 3,660 |
| 1993-94 | 105 | 0 | 2.3 | 1,640 | Mar 24 | 1,970 |
| 1994-95 | 707 | 0 | 9.4 | 6,777 | Mar 11 | 4,610 |
| 1995-96 | 656 | 0 | 7.5 | 5,464 | Jan 31 | 5,010 |

M Data missing
* Record incomplete
E Estimate
N.D. Not determined
** Record not computed
+ Less than 0.05 acre feet or less than 0.05 cfs, but greater than 0

# RUNOFF – STREAM GAGING STATION PEAK FLOW

## RUBIO WASH at Glendon Way.
## STATION NO. F82C-R

| Season | Daily CFS | | | Total Runoff (Acre-feet) | Peak Flow | |
|---|---|---|---|---|---|---|
| | Maximum | Minimum | Mean | | Date | CFS |
| 1996-97 | 156 | 0 | 3.9 | 2,790 | Jan 15 | 1,180 |
| 1997-98 | 438 | 0 | 9.1 | 6,590 | Feb 06 | 4,030 |
| 1998-99 | 79 | 0 | 2.2 | 1,560 | Nov 28 | 2,430 |
| 1999-00 | 218 | 0.1 | 5.6 | 4,030 | Feb 21 | 2,710 |
| 2000-01 | 249 | 0.6 | 5.7 | 4,120 | Jan 11 | 1,670 |
| 2001-02 | 186 | 0.4 | 3 | 2,187 | Nov 24 | 3,553 |
| 2002-03 | 0 | 0 | 7.1 | 0 | Mar 16 | 2,550 |
| 2003-04 | 336 | 0 | 3.9 | 2,811 | Feb 26 | 2,970 |
| 2004-05 | 466 | 0.1 | 11.3 | 8,170 | Oct 20 | 3,470 |
| 2005-06 | 270 | 0.1 | 4.7 | 3,430 | Jan 02 | 2,663 |
| 2006-07 | 65 | 0.1 | 1.5 | 1,100 | Feb 11 | 1,057 |
| 2007-08 | 407 | 0 | 5.1 | 3,717 | Jan 04 | 3,859 |
| 2008-09 | 189 | 0 | 3.5 | 2,560 | Feb 05 | 2,350 |
| 2009-10 | 267 | 0 | 5.4 | 3,900 | Jan 18 | 3,330 |
| 2010-11 | 487 | 0.02 | 7.51 | 5,440 | Dec 22 | 2,660 |
| 2011-12 | 172 | 0.19 | 3.03 | 2,200 | Mar 17 | 2,030 |
| 2012-13 | 65 | 0.05 | 1.54 | 1,120 | Oct 11 | 1,630 |
| 2013-14 | 284 | 0.05 | 1.51 | 1,090 | Feb 28 | 1,440 |
| 2014-15 | 229 | 0 | 2.56 | 1,850 | Dec 12 | 2,900 |
| 2015-16 | 284 | 0 | 2.56 | 1,860 | Jan 05 | 2,600 |
| 2016-17 | 248 | 0 | 4.7 | 3,400 | Dec 23 | 2,130 |
| 2017-18 | 177 | 0 | 1.94 | 1,400 | Jan 09 | 1,390 |
| 2018-19 | 347 | 0 | 5.78 | 4,180 | Feb 02 | 3,740 |
| 2019-20 | 261 | 0 | 3.68 | 2,670 | Apr 06 | 3,180 |

M Data missing
* Record incomplete
E Estimate
N.D. Not determined
** Record not computed
+ Less than 0.05 acre feet or less than 0.05 cfs, but greater than 0

# RUNOFF – STREAM GAGING STATION PEAK FLOW

## SAN DIMAS CREEK below San Dimas Dam.
## STATION NO. F303-R

| Season | Daily CFS | | | Total Runoff (Acre-feet) | Peak Flow | |
|---|---|---|---|---|---|---|
| | Maximum | Minimum | Mean | | Date | CFS |
| 1951-52 | 171 | 0 | 6.4 | 4,661 | Mar 16 | 292 |
| 1952-53 | 6 | 0.1 | 1.5 | 1,116 | Jul 06 | 7 |
| 1953-54 | 61 | 0 | 2.1 | 1,539 | Jan 25 | 161 |
| 1954-55 | 6 | 0 | 0.8 | 563 | Nov 16 | 175 |
| 1955-56 | 40 | 0 | 1.1 | 816 | Jan 26 | 54 |
| 1956-57 | 5 | 0 | 0.6 | 435 | | 5 |
| 1957-58 | 220 | 0 | 9.1 | 6,525 | Apr 03 | 270 |
| 1958-59 | 19 | 0 | 1.8 | 1,261 | Feb 18 | 20 |
| 1959-60 | 6 | 0 | 0.7 | 484 | Aug 25 | 6 |
| 1960-61 | 17 | 0 | 0.4 | 292 | Aug 01 | 20 |
| 1961-62 | 136 | 0 | 3.9 | 2,728 | Dec 03 | 215 |
| 1962-63 | 83 | 0 | 1.5 | 1,104 | Feb 09 | 404 |
| 1963-64 | 24 | 0 | 1 | 752 | | |
| 1964-65 | 49 | 0.1 | 1.7 | 1,196 | Apr 09 | 133 |
| 1965-66 | 242 | 0.1 | 8.8 | 6,332 | Nov 23 | 500 |
| 1966-67 | 516 | 0 | 15.9 | 11,534 | Dec 06 | 1,190 |
| 1967-68 | N.D. | | | | | |
| 1968-69 | N.D. | | | | | |
| 1969-70 | N.D. | | | | | |
| 1970-71 | N.D. | | | | | |
| 1971-72 | N.D. | | | | | |
| 1972-73 | N.D. | | | | | |
| 1973-74 | N.D. | | | | | |
| 1974-75 | 18 | 0.2 | 2.2 | 1,565 | May 13 | 36 |
| 1975-76 | 9 | 0.1 | 1.3 | 926 | Mar 22 | 14 |
| 1976-77 | 26 | 0 | 1.6 | 1,135 | Apr 06 | 58 |
| 1977-78 | 703 | 0 | 0.8 | 18,359 | Mar 04 | 938 |
| 1978-79 | 227 | 0.2 | 0.3 | 7,355 | Mar 28 | 102 |
| 1979-80 | 894 | 0.1 | 0 | 0 | | |
| 1980-81 | 26 | 0.3 | 4.4 | 3,217 | Dec 01 | 27 |
| 1981-82 | 100 | 0.1 | 5.1 | 3,701 | Mar 17 | 201 |
| 1982-83 | 5,840 | 0.4 | 24 | 17,376 | Mar 01 | 883 |
| 1983-84 | 37 | 0.2 | 6 | 4,322 | Feb 28 | 53 |

M Data missing
* Record incomplete
E Estimate
N.D. Not determined
** Record not computed
\+ Less than 0.05 acre feet or less than 0.05 cfs, but greater than 0

# RUNOFF – STREAM GAGING STATION PEAK FLOW

**SAN DIMAS CREEK below San Dimas Dam.**
**STATION NO. F303-R**

| Season | Daily CFS | | | Total Runoff | Peak Flow | |
|---|---|---|---|---|---|---|
| | Maximum | Minimum | Mean | (Acre-feet) | Date | CFS |
| 1984-85 | 48 | 0.4 | 3.5 | 2,561 | Jun 04 | 51 |
| 1985-86 | 56 | 0 | 3.3 | 2,415 | | |
| 1986-87 | 9 | 0 | 0.9 | 616 | Jan 04 | 23 |
| 1987-88 | 31 | 0.4 | 1.7 | 1,253 | | |
| 1988-89 | 99 | 0.1 | 2 | 1,401 | May 10 | 248 |
| 1989-90 | 50 | 0 | 0.5 | 365 | Jun 08 | 198 |
| 1990-91 | 20 | 0.1 | 3.2 | 2,352 | Oct 23 | 229 |
| 1991-92 | 136 | 0 | 5.3 | 3,831 | Mar 24 | 150 |
| 1992-93 | 587 | 0.3 | 33.7 | 24,415 | Jan 18 | 651 |
| 1993-94 | 22 | 0.3 | 3.3 | 2,389 | Oct 27 | 130 |
| 1994-95 | 177 | 0.4 | 14 | 10,127 | Mar 06 | 248 |
| 1995-96 | 73 | 0.5 | 5.7 | 4,111 | Feb 22 | 78 |
| 1996-97 | 100 | 0.2 | 4.1 | 2,977 | Apr 01 | 107 |
| 1997-98 | 271 | 0.4 | 16.3 | 11,837 | Feb 24 | 452 |
| 1998-99 | 64 | 0 | 5.1 | 3,724 | May 20 | 104 |
| 1999-00* | 7 | 0 | 0.6 | 457 | Jun 26 | 36 |
| 2000-01 | 41 | 0 | 2.2 | 1,570 | May 15 | 293 |
| 2001-02 | 23 | 0 | 0.6 | 465 | May 15 | 242 |
| 2002-03 | 152 | 0.1 | 3.3 | 2,371 | Mar 16 | 771 |
| 2003-04 | 40 | 0.2 | 2.2 | 1,610 | Dec 25 | 169 |
| 2004-05 | 1,110 | 0 | 32.9 | 23,700 | Jan 11 | 1,410 |
| 2005-06 | 116 | 0.3 | 7.3 | 5,270 | May 11 | 378 |
| 2006-07 | 12 | 0.3 | 2.2 | 1,558 | Apr 19 | 183 |
| 2007-08 | 98 | 1.1 | 7.4 | 5,380 | Nov 06 | 399 |
| 2008-09 | 60 | 1 | 5.7 | 4,130 | Feb 19 | 67 |
| 2009-10 | 65 | 0 | 7.1 | 5,170 | May 06 | 128 |
| 2010-11 | 251 | 0.81 | 11.9 | 8,630 | Dec 22 | 357 |
| 2011-12 | 16 | 0.49 | 2.08 | 1,510 | May 03 | 61 |
| 2012-13 | 16 | 0.04 | 0.91 | 658 | Apr 09 | 792 |
| 2013-14 | 61.3 | 0 | 0.67 | 486 | Jul 03 | 114 |
| 2014-15 | 26.8 | 0 | 0.48 | 350 | May 18 | 62 |
| 2015-16 | 35.3 | 0 | 0.66 | 478 | Apr 21 | 928 |
| 2016-17 | 117 | 0 | 2.59 | 1,870 | Apr 18 | 127 |

M Data missing
* Record incomplete
E Estimate
N.D. Not determined
** Record not computed
\+ Less than 0.05 acre feet or less than 0.05 cfs, but greater than 0

# RUNOFF – STREAM GAGING STATION PEAK FLOW

**SAN DIMAS CREEK below San Dimas Dam.**
**STATION NO. F303-R**

| Season | Daily CFS | | | Total Runoff (Acre-feet) | Peak Flow | |
|---|---|---|---|---|---|---|
| | Maximum | Minimum | Mean | | Date | CFS |
| 2017-18 | 61 | 0 | 0.41 | 295 | May 03 | 680 |
| 2018-19 | 147 | 0 | 6.6 | 4,780 | May 02 | 430 |
| 2019-20 | 174 | 0 | 4.55 | 3,300 | May 07 | 492 |

M Data missing
* Record incomplete
E Estimate
N.D. Not determined
** Record not computed
+ Less than 0.05 acre feet or less than 0.05 cfs, but greater than 0

# RUNOFF – STREAM GAGING STATION PEAK FLOW

## SAN DIMAS WASH below Puddingstone Diversion.
## STATION NO. F218-R

| Season | Daily CFS | | | Total Runoff (Acre-feet) | Peak Flow | |
|---|---|---|---|---|---|---|
| | Maximum | Minimum | Mean | | Date | CFS |
| 1945-46 | 22 | 0 | 0.3 | 247 | Apr 04 | 42 |
| 1946-47 | 10 | 0 | 0.7 | 484 | Dec 27 | 10 |
| 1947-48 | N.D. | | | | | |
| 1948-49 | N.D. | | | | | |
| 1949-50 | N.D. | | | | | |
| 1950-51 | N.D. | | | | | |
| 1951-52 | 23 | 0 | 1.1 | 781 | Mar 17 | 23 |
| 1952-53 | N.D. | | | | | |
| 1953-54 | 12 | 0 | 0.3 | 244 | Feb 14 | 12 |
| 1954-55 | N.D. | | | | | |
| 1955-56 | 8 | 0 | 0.1 | 93 | Jan 27 | 16 |
| 1956-57 | N.D. | | | | | |
| 1957-58 | 12 | 0 | 1.6 | 1,113 | Mar 28 | 19 |
| 1958-59 | 5 | 0 | 0.1 | 49 | Feb 12 | 7 |
| 1959-60 | N.D. | | | | | |
| 1960-61 | 14 | 0 | 0.1 | 72 | Jul 21 | 15 |
| 1961-62 | 3 | 0 | 0.1 | 51 | Apr 06 | 43 |
| 1962-63 | 10 | 0 | 0.4 | 286 | Oct 25 | 16 |
| 1963-64 | 17 | 0 | 0.1 | 67 | Apr 10 | 46 |
| 1964-65 | 19 | 0 | 0.5 | 334 | May 11 | 35 |
| 1965-66 | 34 | 0 | 4.6 | 3,330 | Jan 04 | 35 |
| 1966-67 | 12 | 0 | 2.9 | 2,098 | Feb 13 | 44 |
| 1967-68 | N.D. | | | | | |
| 1968-69 | N.D. | | | | | |
| 1969-70 | N.D. | | | | | |
| 1970-71 | N.D. | | | | | |
| 1971-72 | N.D. | | | | | |
| 1972-73 | N.D. | | | | | |
| 1973-74 | N.D. | | | | | |
| 1974-75 | 19 | 0 | 1.1 | 786 | Feb 18 | 30 |
| 1975-76 | 10 | 0 | 0.5 | 333 | Mar 01 | 11 |
| 1976-77 | 17 | 0 | 0 | 0 | | |
| 1977-78 | 32 | 0 | 9.1 | 6,621 | Apr 28 | 40 |

M Data missing
* Record incomplete
E Estimate
N.D. Not determined
** Record not computed
\+ Less than 0.05 acre feet or less than 0.05 cfs, but greater than 0

# RUNOFF – STREAM GAGING STATION PEAK FLOW

**SAN DIMAS WASH below Puddingstone Diversion.**
**STATION NO. F218-R**

| Season | Daily CFS | | | Total Runoff (Acre-feet) | Peak Flow | |
|---|---|---|---|---|---|---|
| | Maximum | Minimum | Mean | | Date | CFS |
| 1978-79 | 18 | 0 | 0.2 | 4,827 | Dec 19 | 22 |
| 1979-80 | 27 | 0 | 6.9 | 4,966 | Mar 29 | 28 |
| 1980-81 | 20 | 0 | 2.6 | 1,879 | Feb 04 | 25 |
| 1981-82 | 27 | 0 | 3.4 | 2,446 | Dec 09 | 40 |
| 1982-83 | 35 | 0 | 0.4 | 8,302 | May 12 | 37 |
| 1983-84 | 22 | 0 | 0.1 | 2,884 | | |
| 1984-85 | 21 | 0 | 1.8 | 1,282 | Dec 27 | 22 |
| 1985-86 | 43 | 0 | 1.4 | 995 | Mar 17 | 43 |
| 1986-87 | 7 | 0 | 0.5 | 703 | Jan 05 | 16 |
| 1987-88 | 12 | 0 | 1 | 774 | Jul 05 | 16 |
| 1988-89 | 14 | 0 | 1 | 691 | Feb 04 | 16 |
| 1989-90 | 14 | 0 | 0.2 | 127 | Jun 11 | 20 |
| 1990-91 | 19 | 0 | 2.8 | 2,012 | Mar 06 | 21 |
| 1991-92 | 15 | 0 | 3.3 | 2,375 | Apr 20 | 18 |
| 1992-93 | 19 | 0 | 4.5 | 3,225 | Jan 11 | 27 |
| 1993-94 | 15 | 0 | 2.1 | 1,497 | Feb 22 | 15 |
| 1994-95 | 21 | 0 | 7.7 | 5,554 | Mar 30 | 23 |
| 1995-96 | 34 | 0 | 3.5 | 2,573 | Feb 21 | 40 |
| 1996-97 | 35 | 0 | 2.7 | 1,980 | Jan 28 | 36 |
| 1997-98 | 33 | 0 | 5.5 | 3,960 | Feb 08 | 37 |
| 1998-99 | 25 | 0 | 1.8 | 1,290 | Apr 22 | 30 |
| 1999-00 | 35 | 0 | 0.8 | 553 | Jun 14 | 39 |
| 2000-01 | 27 | 0 | 1.1 | 819 | Jun 03 | 29 |
| 2001-02 | 8 | 0 | 0.1 | 67 | Jun 11 | 17 |
| 2002-03 | 19 | 0 | 0.8 | 554 | Mar 16 | 38 |
| 2003-04 | 23 | 0 | 1.6 | 1,145 | Dec 25 | 28 |
| 2004-05 | 29 | 0 | 6.7 | 4,830 | Nov 02 | 35 |
| 2005-06 | 36 | 0 | 4.5 | 3,240 | Apr 11 | 39 |
| 2006-07 | 8 | 0 | 3.5 | 378 | Apr 10 | 11 |
| 2007-08 | 14 | 0 | 1.4 | 1,049 | Feb 19 | 16 |
| 2008-09 | 16 | 0 | 1.2 | 898 | Feb 10 | 22 |
| 2009-10 | 23 | 0 | 2.2 | 1,570 | Jan 27 | 31 |
| 2010-11 | 18 | 0 | 2.89 | 2,100 | Mar 30 | 19 |

M Data missing
* Record incomplete
E Estimate
N.D. Not determined
** Record not computed
\+ Less than 0.05 acre feet or less than 0.05 cfs, but greater than 0

# RUNOFF – STREAM GAGING STATION PEAK FLOW

**SAN DIMAS WASH below Puddingstone Diversion.**
**STATION NO. F218-R**

| Season | Daily CFS | | | Total Runoff (Acre-feet) | Peak Flow | |
|---|---|---|---|---|---|---|
| | Maximum | Minimum | Mean | | Date | CFS |
| 2011-12 | 9 | 0 | 0.81 | 590 | Mar 13 | 12 |
| 2012-13 | 7 | 0 | 0.14 | 101 | Apr 29 | 7 |
| 2013-14 | 7.64 | 0 | 0.078 | 56 | Jul 30 | 8.55 |
| 2014-15 | 5.72 | 0 | 0.21 | 149 | May 21 | 5.81 |
| 2015-16 | 8.05 | 0 | 0.11 | 80 | May 05 | 8.1 |
| 2016-17 | 26.5 | 0 | 1.52 | 1,100 | Jan 30 | 27 |
| 2017-18 | 5.61 | 0 | 0.09 | 65 | May 07 | 7.2 |
| 2018-19 | 26.8 | 0 | 3.91 | 2,830 | Feb 15 | 28.4 |
| 2019-20 | 11.8 | 0 | 1.4 | 1,020 | May 12 | 12 |

M Data missing
* Record incomplete
E Estimate
N.D. Not determined
** Record not computed
+ Less than 0.05 acre feet or less than 0.05 cfs, but greater than 0

# RUNOFF – STREAM GAGING STATION PEAK FLOW

## SAN GABRIEL RIVER - AZUSA CONDUIT 25 Ft. Weir Below S.G. Dam
## STATION NO. F250-R

| Season | Daily CFS | | | Total Runoff (Acre-feet) | Peak Flow | |
|---|---|---|---|---|---|---|
| | Maximum | Minimum | Mean | | Date | CFS |
| 1934-35 | 116.0* | 26.1* | 81 | 36,610* | | |
| 1935-36 | 109 | 0 | 42.1 | 30,540 | | |
| 1936-37 | 94 | 0 | 27.3 | 19,740 | | |
| 1937-38 | 104 | 0 | 15.4 | 11,160 | | |
| 1938-39 | 103 | 0 | 5.9 | 4,280 | | |
| 1939-40 | 94 | 0 | 47.4 | 34,440 | | |
| 1940-41 | 110 | 0 | 23.8 | 17,220 | | |
| 1941-42 | 92 | 0 | 23.8 | 39,940 | | |
| 1942-43 | 106 | 0 | 44.6 | 32,250 | | |
| 1943-44 | 97 | 0 | 59.3 | 43,050 | | |
| 1944-45 | 142 | 0 | 81.5 | 59,050 | | |
| 1945-46 | 139 | 0 | 66.3 | 47,930 | | |
| 1946-47 | 138 | 0 | 73.2 | 52,990 | | |
| 1947-48 | 60 | 0 | 36.9 | 26,830 | | |
| 1948-49 | 70 | 0 | 25 | 18,120 | | |
| 1949-50 | 82 | 20 | 37.4 | 27,060 | | |
| 1950-51 | 70 | 0 | 11.9 | 8,610 | | |
| 1951-52 | 96 | 0 | 65.3 | 47,400 | | |
| 1952-53 | 89 | 0 | 43.7 | 31,660 | | |
| 1953-54 | 90 | 0 | 38.8 | 28,070 | | |
| 1954-55 | 84 | 30 | 50.6 | 36,610 | | |
| 1955-56 | 86 | 14.7 | 49 | 35,580 | | |
| 1956-57 | 86 | 0 | 36.7 | 26,670 | | |
| 1957-58 | 103 | 0 | 29.7 | 21,500 | | |
| 1958-59 | 90 | 12.3 | 49.2 | 35,620 | | |
| 1959-60 | 50 | 5.1 | 24.6 | 17,840 | | |
| 1960-61 | 45 | 0 | 12.2 | 8,830 | | |
| 1961-62 | 86 | 0 | 57.1 | 41,330 | | |
| 1962-63 | 82 | 0.1 | 33.9 | 24,550 | | |
| 1963-64 | 48 | 8 | 31 | 22,490 | | |
| 1964-65 | 81 | 0.1 | 35.8 | 25,900 | | |
| 1965-66 | 83 | 0 | 35.7 | 25,840 | | |
| 1966-67 | 100 | 0 | 52.7 | 38,130 | | |

M Data missing
* Record incomplete
E Estimate
N.D. Not determined
** Record not computed
+ Less than 0.05 acre feet or less than 0.05 cfs, but greater than 0

# RUNOFF – STREAM GAGING STATION PEAK FLOW

## SAN GABRIEL RIVER - AZUSA CONDUIT 25 Ft. Weir Below S.G. Dam
## STATION NO. F250-R

| Season | Daily CFS | | | Total Runoff (Acre-feet) | Peak Flow | |
|---|---|---|---|---|---|---|
| | Maximum | Minimum | Mean | | Date | CFS |
| 1967-68 | 82 | 15 | 60.4 | 43,810 | | |
| 1968-69 | 32 | 0 | 8.8 | 6,380 | | |
| 1969-70 | M | M | M | M | | |
| 1970-71 | M | M | M | M | | |
| 1971-72 | M | M | M | M | | |
| 1972-73 | M | M | M | M | | |
| 1973-74 | M | M | M | M | | |
| 1974-75 | 78 | 0 | 54.4 | 39,389 | Oct 01 | 78 |
| 1975-76 | 77 | 0.9 | 45.9 | 33,347 | Sep 30 | 145 |
| 1976-77 | M | M | M | M | | |
| 1977-78 | 78 | 0 | 1.5 | 33,240 | | 85 |
| 1978-79 | 105 | 49.1 | 72.2 | 52,249 | Jul 02 | 106 |
| 1979-80 | 101 | 1.5 | 39.8 | 28,882 | Jul 29 | 105 |
| 1980-81 | 99 | 0 | 53.7 | 38,894 | Mar 16 | 105 |
| 1981-82 | 81 | 24.3 | 55.7 | 40,319 | | 82 |
| 1982-83 | 85 | 34.1 | 2.3 | 50,283 | Mar 04 | 98 |
| 1983-84 | 79 | 0 | 1.5 | 33,803 | Feb 06 | 86 |
| 1984-85 | * | * | * | * | | N.D. |
| 1985-86 | 81 | 0 | 56 | 40,696 | | |
| 1986-87 | 45 | 0 | 29.2 | 21,124 | Jan 08 | 47 |
| 1987-88 | 79 | 0.2 | 35.5 | 25,806 | Sep 29 | 52 |
| 1988-89 | 85 | 0 | 46.6 | 33,739 | | |
| 1989-90 | 35 | 0 | 21.9 | 15,863 | Jul 16 | 35 |
| 1990-91 | 79 | 3 | 28.4 | 20,280 | Sep 28 | 79 |
| 1991-92 | 83 | 0 | 52 | 37,764 | Apr 29 | 101 |
| 1992-93 | 84 | 0 | 49.7 | 36,010 | Feb 12 | 97 |
| 1993-94 | 82 | 0 | 58.5 | 42,340 | Oct 25 | 89 |
| 1994-95 | 84 | 0 | 59.9 | 43,350 | Feb 19 | 86 |
| 1995-96 | 77 | 0 | 55.4 | 40,190 | Nov 06 | 90 |
| 1996-97 | 82 | 0 | 59.2 | 42,880 | Jan 26 | 84 |
| 1997-98 | 83 | 0 | 51.3 | 37,140 | Jul 04 | 109 |
| 1998-99 | 139 | 0 | 69.4 | 50,240 | Nov 20 | 142 |
| 1999-00 | 73 | 0 | 38 | 27,610 | Oct 01 | 76 |

M Data missing
* Record incomplete
E Estimate
N.D. Not determined
** Record not computed
+ Less than 0.05 acre feet or less than 0.05 cfs, but greater than 0

# RUNOFF – STREAM GAGING STATION PEAK FLOW

## SAN GABRIEL RIVER - AZUSA CONDUIT 25 Ft. Weir Below S.G. Dam
## STATION NO. F250-R

| Season | Daily CFS | | | Total Runoff (Acre-feet) | Peak Flow | |
|---|---|---|---|---|---|---|
| | Maximum | Minimum | Mean | | Date | CFS |
| 2000-01 | 87 | 0 | 46.5 | 33,640 | Jul 06 | 90 |
| 2001-02 | 55 | 0.1 | 18.1 | 13,134 | Nov 24 | 59 |
| 2002-03 | 86 | 0 | 17.6 | 19,988 | Mar 27 | 94 |
| 2003-04 | 0 | 0 | 26 | 0 | May 12 | 110 |
| 2004-05 | 83 | 0 | 30.7 | 22,200 | Apr 28 | 130 |
| 2005-06 | 124 | 0 | 32.8 | 23,710 | Apr 17 | 127 |
| 2006-07 | 45 | 0.2 | 24.4 | 13,160 | Feb 17 | 71 |
| 2007-08 | 96 | 0 | 24.8 | 17,986 | Sep 29 | 121 |
| 2008-09 | 135 | 0 | 33.9 | 24,510 | Mar 04 | 139 |
| 2009-10 | 79 | 0 | 27.9 | 20,170 | Jul 14 | 139 |
| 2010-11 | 64 | 0.22 | 54.6 | 39,530 | Jan 25 | 70 |
| 2011-12 | 64 | 0 | 42 | 30,510 | Feb 01 | 79 |
| 2012-13 | 30 | 0 | 10.2 | 7,360 | Mar 03 | 30 |
| 2013-14 | 81.1 | 0 | 17.8 | 12,890 | Jul 23 | 116 |
| 2014-15 | 34.9 | 0 | 8.73 | 6,320 | Sep 09 | 41 |
| 2015-16 | 34.7 | 0 | 10 | 7,270 | Mar 29 | 101 |
| 2016-17 | 64.7 | 0 | 26.7 | 19,260 | Mar 14 | 68 |
| 2017-18 | 19.8 | 0 | 1.22 | 886 | Oct 04 | 65 |
| 2018-19 | 64.7 | 0 | 24.4 | 17,660 | Jun 04 | 65 |
| 2019-20 | 70.5 | 0 | 31.2 | 22,640 | Aug 18 | 73 |

M Data missing
* Record incomplete
E Estimate
N.D. Not determined
** Record not computed
+ Less than 0.05 acre feet or less than 0.05 cfs, but greater than 0

# RUNOFF – STREAM GAGING STATION PEAK FLOW

## SAN GABRIEL RIVER - AZUSA CONDUIT 10 Ft. Weir Below S.G. Dam
## STATION NO. F220B-R

| Season | Daily CFS | | | Total Runoff (Acre-feet) | Peak Flow | |
|---|---|---|---|---|---|---|
| | Maximum | Minimum | Mean | | Date | CFS |
| 1932-33 | 92 | 0 | 27.5 | 17,043 | | |
| 1933-34 | 86 | 0 | 27.3 | 19,770 | | |
| 1934-35 | 94 | 6.2 | 64.3 | 46,570 | | |
| 1935-36 | 86 | 9.1 | 40.7 | 29,500 | | |
| 1936-37 | 93 | + | 29 | 21,030 | | |
| 1937-38 | 94 | + | 16.4 | 11,910 | | |
| 1938-39 | 0 | 0 | 0 | 0 | | |
| 1939-40 | 90 | + | 32.7 | 23,760 | | |
| 1940-41 | 89 | + | 23.2 | 16,820 | | |
| 1941-42 | 91 | + | 53 | 38,360 | | |
| 1942-43 | 94 | 0.1 | 36.6 | 26,510 | | |
| 1943-44 | 94 | + | 56.9 | 41,310 | | |
| 1944-45 | 96 | + | 59.2 | 42,910 | | |
| 1945-46 | 92 | + | 55 | 39,820 | | |
| 1946-47 | 92 | 0.1 | 64.7 | 46,900 | | |
| 1947-48 | 60 | + | 34.4 | 24,960 | | |
| 1948-49 | 70 | 0.1 | 24 | 17,380 | | |
| 1949-50 | 82 | 19 | 37.5 | 27,140 | | |
| 1950-51 | 70 | 0 | 11.5 | 8,310 | | |
| 1951-52 | 91 | 0 | 65.2 | 47,300 | | |
| 1952-53 | 89 | + | 43.7 | 31,680 | | |
| 1953-54 | 89 | + | 38.8 | 28,090 | | |
| 1954-55 | 85 | 30 | 50.6 | 36,600 | | |
| 1955-56 | 86 | 14.8 | 49 | 35,580 | | |
| 1956-57 | 86 | 0 | 36.8 | 26,670 | | |
| 1957-58 | 87 | 0 | 27.8 | 20,140 | | |
| 1958-59 | 89 | 12.4 | 49.4 | 35,730 | | |
| 1959-60 | 50 | 5.3 | 24.6 | 17,850 | | |
| 1960-61 | 45 | 0 | 12.2 | 8,820 | | |
| 1961-62 | 86 | 0 | 57.4 | 41,570 | | |
| 1962-63 | 83 | 0 | 33 | 23,930 | | |
| 1963-64 | 48 | 8 | 31 | 22,490 | | |
| 1964-65D | 81 | 0.1 | 35.8 | 25,900 | | |

M Data missing
* Record incomplete
E Estimate
N.D. Not determined
** Record not computed
\+ Less than 0.05 acre feet or less than 0.05 cfs, but greater than 0

# RUNOFF – STREAM GAGING STATION PEAK FLOW

## SAN GABRIEL RIVER - AZUSA CONDUIT 10 Ft. Weir Below S.G. Dam
## STATION NO. F220B-R

| Season | Daily CFS | | | Total Runoff (Acre-feet) | Peak Flow | |
|---|---|---|---|---|---|---|
| | Maximum | Minimum | Mean | | Date | CFS |
| 1965-66D | 83 | 0 | 35.7 | 25,840 | | |
| 1966-67B | 84 | 0 | 41.8 | 30,250 | | |
| 1967-68 | 82 | + | 50.3 | 36,480 | | |
| 1968-69 | 54 | 0 | 1.1 | 777 | | |
| 1969-70 | 61 | 0 | 5.4 | 3,920 | | |
| 1970-71 | 75 | 0 | 42.4 | 30,710 | | |
| 1971-72 | 70 | 0 | 25.6 | 18,590 | | |
| 1972-73 | 76 | 0 | 19 | 13,656 | | |
| 1973-74 | 82 | 0 | 62.2 | 44,943 | | |
| 1974-75 | 78 | 0 | 54.4 | 39,381 | | |
| 1975-76 | 77 | 0.9 | 46.1 | 33,591 | | |
| 1976-77 | 71 | 1.1 | 40.7 | 29,491 | | |
| 1977-78 | N.D. | | | | | |
| 1978-79 | N.D. | | | | | |
| 1979-80 | N.D. | | | | | |
| 1980-81 | N.D. | | | | | |
| 1981-82 | N.D. | | | | | |
| 1982-83* | * | * | * | * | | |
| 1983-84 | N.D. | | | | | |
| 1984-85 | N.D. | | | | | |
| 1985-86 | N.D. | | | | | |
| 1986-87 | N.D. | | | | | |
| 1987-88 | N.D. | | | | | |
| 1988-89 | 845 | 0 | 47 | 34,049 | Dec 06 | 86 |
| 1989-90 | N.D. | | | | | |
| 1990-91 | N.D. | | | | | |
| 1991-92 | N.D. | | | | | |
| 1992-93* | 84* | 12.9* | 63.1* | 14650* | | |
| 1993-94 | N.D. | | | | | |
| 1994-95 | N.D. | | | | | |
| 1995-96 | N.D. | | | | | |
| 1996-97 | N.D. | | | | | |
| 1997-98 | 79 | 0 | 46.8 | 33,850 | Jul 26 | 91 |

M Data missing
* Record incomplete
E Estimate
N.D. Not determined
** Record not computed
+ Less than 0.05 acre feet or less than 0.05 cfs, but greater than 0

# RUNOFF – STREAM GAGING STATION PEAK FLOW

## SAN GABRIEL RIVER - AZUSA CONDUIT 10 Ft. Weir Below S.G. Dam
## STATION NO. F220B-R

| Season | Daily CFS | | | Total Runoff (Acre-feet) | Peak Flow | |
|---|---|---|---|---|---|---|
| | Maximum | Minimum | Mean | | Date | CFS |
| 1998-99 | 74 | 0 | 64.2 | 46,450 | Nov 27 | 85 |
| 1999-00 | 72 | 0 | 38 | 27,600 | Jul 03 | 77 |
| 2000-01 | 73 | 0 | 44.5 | 32,200 | Jul 14 | 76 |
| 2001-02 | 54 | 0.1 | 18.1 | 13,131 | Nov 19 | 55 |
| 2002-03 | 18 | 0 | 0.4 | 321 | Apr 08 | 29 |
| 2003-04 | 44 | 0 | 15 | 10,545 | Nov 25 | 65 |
| 2004-05 | 57 | 0 | 11.4 | 8,250 | Apr 28 | 85 |
| 2005-06 | 60 | 0 | 13.3 | 9,560 | Apr 18 | 80 |
| 2006-07 | 42 | 0.1 | 25.6 | 12,076 | Nov 06 | 42 |
| 2007-08 | 57 | 0 | 12.8 | 9,312 | Jul 03 | 85 |
| 2008-09 | 50 | 0 | 31.1 | 22,510 | Apr 07 | 65 |
| 2009-10 | 49 | 0 | 2.8 | 2,000 | Oct 12 | 50 |
| 2010-11 | 62 | 0 | 42.9 | 31,040 | Jan 25 | 77 |
| 2011-12 | 60 | 0 | 42.8 | 31,050 | Oct 16 | 61 |
| 2012-13 | 27 | 0 | 5.8 | 4,200 | Nov 29 | 27 |
| 2013-14 | 16.3 | 0 | 3.03 | 2,190 | Nov 25 | 38 |
| 2014-15 | 50.5 | 0 | 8.82 | 6,380 | Apr 06 | 55 |
| 2015-16 | 34.6 | 0 | 8.32 | 6,040 | Apr 05 | 45 |
| 2016-17 | 34.0 | 0 | 3.24 | 2,340 | Mar 14 | 45 |
| 2017-18 | 19.3 | 0 | 1.13 | 821 | Sep 29 | 20 |
| 2018-19 | 21.4 | 0 | 10.2 | 7,390 | Jun 04 | 42 |
| 2019-20 | N.D. | N.D | N.D | N.D | N.D | N.D |

M Data missing
* Record incomplete
E Estimate
N.D. Not determined
** Record not computed
+ Less than 0.05 acre feet or less than 0.05 cfs, but greater than 0

# RUNOFF – STREAM GAGING STATION PEAK FLOW

## SAN GABRIEL RIVER above Firestone Avenue.
## STATION NO. F262C-R

| Season | Daily CFS | | | Total Runoff | Peak Flow | |
|---|---|---|---|---|---|---|
| | Maximum | Minimum | Mean | (Acre-feet) | Date | CFS |
| 1934-35 | 718 | 0 | 6.5 | 4,700 | Oct 17 | 5,850 |
| 1935-36 | 414 | 0 | 2.4 | 1,750 | Feb 12 | 3,400 |
| 1936-37 | NO RECORD | | | | | |
| 1937-38 | NO RECORD | | | | | |
| 1938-39 | 325 | 0 | | 2,540* | Sep 25 | 1,380 |
| 1939-40 | 271 | 0 | 2.6 | 1,900 | Jan 08 | 1,150 |
| 1940-41 | 2,390 | 0 | 105 | 75,780 | Mar 04 | 5,630 |
| 1941-42 | 117 | 0 | 18.7 | 13,570 | Dec 10 | 413 |
| 1942-43 | 9,190 | 0 | 257 | 186,400 | Jan 23 | 14,000 |
| 1943-44 | 4,860 | 0 | 110 | 79,930 | Feb 22 | 16,000 |
| 1944-45 | 806 | 0 | 36.1 | 26,110 | Nov 12 | 4,020 |
| 1945-46 | 1,500 | 0 | 22.8 | 16,480 | Dec 23 | 4,370 |
| 1946-47 | 2,880 | 0 | 38.2 | 27,650 | Dec 31 | 3,640 |
| 1947-48 | 0 | 0 | 0 | 0 | | 0 |
| 1948-49 | 0 | 0 | 0 | 0 | | 0 |
| 1949-50 | 0 | 0 | 0 | 0 | | 0 |
| 1950-51 | 0 | 0 | 0 | 0 | | 0 |
| 1951-52 | 3,070 | 0 | 33.4 | 24,250 | Jan 16 | 8,040 |
| 1952-53 | 181 | 0 | 1.4 | 983 | Dec 02 | 1,270 |
| 1953-54 | 688 | 0 | 5.2 | 3,790 | Feb 13 | 4,060 |
| 1954-55 | 317 | 0 | 1.4 | 1,000 | Jan 18 | 1,850 |
| 1955-56 | 4,580 | 0 | 14.3 | 10,360 | Jan 26 | 12,800E |
| 1956-57 | 490 | 0 | 1.9 | 1,390 | Jan 13 | 2,040 |
| 1957-58 | 1,720 | 0 | 31.9 | 23,960 | Apr 07 | 6,300 |
| 1958-59 | 826 | 0 | 4.3 | 3,130 | Jan 06 | 4,060 |
| 1959-60 | 377 | 0 | 2.7 | 1,990 | Jan 12 | 2,210 |
| 1960-61 | 316 | 0 | 0.9 | 678 | Jan 26 | 2,940 |
| 1961-62 | 2,170 | 0 | 23.7 | 17,340 | Feb 11 | 6,470 |
| 1962-63 | 1,190 | 0 | 7.1 | 5,160 | Mar 16 | 4,270 |
| 1963-64 | 707 | 0 | 4.8 | 3,460 | Nov 20 | 4,330 |
| 1964-65 | 1,210 | 0 | 12.4 | 9,010 | Apr 09 | 4,900 |
| 1965-66 | 697 | 0 | 7.8 | 5,620 | Jan 30 | 2,080 |
| 1966-67 | 1,900 | 0 | 32.2 | 23,300 | Jan 23 | 4,320 |

M Data missing
* Record incomplete
E Estimate
N.D. Not determined
** Record not computed
\+ Less than 0.05 acre feet or less than 0.05 cfs, but greater than 0

# RUNOFF – STREAM GAGING STATION PEAK FLOW

## SAN GABRIEL RIVER above Firestone Avenue.
## STATION NO. F262C-R

| Season | Daily CFS | | | Total Runoff (Acre-feet) | Peak Flow | |
|---|---|---|---|---|---|---|
| | Maximum | Minimum | Mean | | Date | CFS |
| 1967-68 | NO RECORD | | | | | |
| 1968-69 | 8,430 | 0 | 273 | 197,600 | Jan 25 | 10,900 |
| 1969-70 | 1,650 | 0 | 16.5 | 11,950 | Mar 04 | 4,510 |
| 1970-71 | 2,160 | 0 | 15.5 | 11,220 | Nov 29 | 4,410 |
| 1971-72 | 1,450 | 0 | 10.2 | 7,400 | Dec 24 | 7,510 |
| 1972-73 | 2,540 | 0 | 28.6 | 20,700 | Feb 11 | 5,680 |
| 1973-74 | 3,650 | 0 | 26.8 | 19,420 | Jan 07 | 5,870 |
| 1974-75 | 1,390 | 0 | 8.4 | 6,110 | Dec 04 | 6,010 |
| 1975-76 | 690 | 0 | 5.9 | 4,160 | Sep 10 | 2,800 |
| 1976-77 | 486 | 0 | 4.4 | 3,171 | Jan 03 | 3,320 |
| 1977-78 | 5,440 | 0 | 224 | 162,158 | Feb 12 | 8,220 |
| 1978-79 | * | * | * | * | | * |
| 1979-80 | 9,290 | 0 | 222.3 | 156,500 | Feb 17 | 10,900 |
| 1980-81 | 219 | 0 | 1.1 | 773 | Mar 02 | 414 |
| 1981-82 | 186 | 0 | 1 | 723 | Mar 17 | 755 |
| 1982-83 | 4,920 | 0 | 95.2 | 68,938 | Mar 01 | 10,400 |
| 1983-84 | 131 | 0 | 1.8 | 1,341 | Nov 25 | 179 |
| 1984-85 | 215 | 0 | 2.4 | 1,771 | Dec 19 | 283 |
| 1985-86 | 528 | 0 | 6.4 | 4,597 | Sep 25 | 4,510 |
| 1986-87 | 585 | 0 | 2.7 | 1,936 | Jan 04 | 3,350 |
| 1987-88 | 76 | 0 | 0.6 | 466 | Apr 21 | 327 |
| 1988-89 | 148 | 0 | 1.1 | 825 | Dec 25 | 1,174 |
| 1989-90 | 32 | 0 | 0.1 | 65 | Feb 17 | 353 |
| 1990-91 | 169 | 0 | 1 | 694 | Mar 27 | 605 |
| 1991-92 | 673 | 0 | 5.3 | 3,840 | Feb 12 | 2,340 |
| 1992-93 | 6,990 | 0 | 276 | 199,500 | Jan 18 | 7,600 |
| 1993-94 | 0 | 0 | 0 | 0 | | - |
| 1994-95 | 1,520 | 0 | 35.6 | 25,760 | Jan 10 | 5,120 |
| 1995-96 | 871 | 0 | 3.8 | 2,727 | Feb 21 | 2,360 |
| 1996-97 | 291 | 0 | 5.1 | 3,710 | Dec 11 | 1,240 |
| 1997-98 | 5,750 | 0 | 168 | 121,400 | Mar 26 | 8,070 |
| 1998-99 | 19 | 0 | 0.2 | 116 | Nov 08 | 78 |
| 1999-00 | 159 | 0 | 1.1 | 788 | Mar 08 | 3,130 |

M Data missing
* Record incomplete
E Estimate
N.D. Not determined
** Record not computed
+ Less than 0.05 acre feet or less than 0.05 cfs, but greater than 0

# RUNOFF – STREAM GAGING STATION PEAK FLOW

## SAN GABRIEL RIVER above Firestone Avenue.
## STATION NO. F262C-R

| Season | Daily CFS | | | Total Runoff (Acre-feet) | Peak Flow | |
|---|---|---|---|---|---|---|
| | Maximum | Minimum | Mean | | Date | CFS |
| 2000-01 | 708 | 0 | 4.8 | 3,480 | Jan 11 | 2,180 |
| 2001-02 | 243 | 0 | 1 | 555 | Nov 24 | 1,756 |
| 2002-03 | 312 | 0 | 1.6 | 1,143 | Feb 12 | 1,430 |
| 2003-04 | 0 | 0 | 0.5 | 0 | Feb 26 | 856 |
| 2004-05 | 5,940 | 0 | 199 | 144,000 | Feb 21 | 7,930 |
| 2005-06 | 969 | 0 | 7.2 | 5,180 | Apr 05 | 2,819 |
| 2006-07 | 101 | 0.5 | 34.2 | 203 | Dec 10 | 488 |
| 2007-08 | 220 | 0 | 1.4 | 1,049 | Jan 27 | 1,251 |
| 2008-09 | 19 | 0 | 0.2 | 116 | Feb 05 | 115 |
| 2009-10 | 411 | 0 | 3.2 | 2,320 | Feb 06 | 1,380 |
| 2010-11 | 383 | 0 | 3.24 | 2,340 | Dec 22 | 1,670 |
| 2011-12 | 39 | 0 | 0.21 | 150 | Oct 05 | 249 |
| 2012-13 | ND | ND | ND | ND | ND | ND |
| 2013-14 | ND | ND | ND | ND | ND | ND |
| 2014-15 | ND | ND | ND | ND | ND | ND |
| 2015-16 | ND | ND | ND | ND | ND | ND |
| 2016-17 | 449 | 0 | 2.65 | 1,920 | Jan 22 | 2,580 |
| 2017-18 | 0 | 0 | 0 | 0 | Oct 24 | 0 |
| 2018-19 | 452 | 0 | 4.79 | 3,470 | Dec 06 | 1,830 |
| 2019-20 | 214 | 0 | 0.64 | 467 | Dec 26 | 1,680 |

M Data missing
* Record incomplete
E Estimate
N.D. Not determined
** Record not computed
\+ Less than 0.05 acre feet or less than 0.05 cfs, but greater than 0

# RUNOFF – STREAM GAGING STATION PEAK FLOW

## SAN GABRIEL RIVER above Spring Street.
## STATION NO. F42B-R

| Season | Daily CFS | | | Total Runoff (Acre-feet) | Peak Flow | |
|---|---|---|---|---|---|---|
| | Maximum | Minimum | Mean | | Date | CFS |
| 1927-28 | 0 | 0 | 0 | 0 | | 0 |
| 1928-29 | 0 | 0 | 0 | 0 | | 0 |
| 1929-30 | 0 | 0 | 0 | 0 | | 0 |
| 1930-31 | 0 | 0 | 0 | 0 | | 0 |
| 1931-32 | 1,270 | 0 | 9 | 6,560 | Feb 09 | 4,490 |
| 1932-33 | 170 | 0 | 1.1 | 809 | Jan 20 | 2,250 |
| 1933-34 | 4,860 | 0 | 17.1 | 12,370 | Jan 01 | 15,000 |
| 1934-35 | 463 | 0 | 3.3 | 2,380 | Oct 17 | 3,390 |
| 1935-36 | 220 | 0 | 1.6 | 1,190 | Feb 12 | 1,910 |
| 1936-37 | 1,850 | 0 | 18.7 | 13,510 | Feb 14 | 4,560 |
| 1937-38 | 14,500 | 0 | 122 | 88,020 | Mar 02 | 27,000E |
| 1938-39 | 265 | 0 | 1.5 | 1,080 | Dec 19 | 956 |
| 1939-40 | 192.0E | 0 | 2 | 1,460 | Feb 03 | 1,400 |
| 1940-41 | 1,710 | 0 | 91 | 65,890 | Mar 13 | 4,830 |
| 1941-42 | 148 | 0 | 15 | 10,830 | Dec 11 | 277 |
| 1942-43 | 9,570 | 0 | 280 | 175,100 | Jan 23 | 14,600 |
| 1943-44 | 5,570 | 0 | 99.4 | 72,200 | Feb 22 | 15,000 |
| 1944-45 | 742 | 0 | 30.8 | 22,280 | Feb 02 | 1,910 |
| 1945-46 | 1,460 | 0 | 17.4 | 12,590 | Dec 23 | 3,300 |
| 1946-47 | 2,520 | 0 | 33.3 | 24,100 | Jan 01 | 2,740 |
| 1947-48 | 0 | 0 | 0 | 0 | | 0 |
| 1948-49 | 0 | 0 | 0 | 0 | | 0 |
| 1949-50 | 0 | 0 | 0 | 0 | | 0 |
| 1950-51 | 0 | 0 | 0 | 0 | | 0 |
| 1951-52 | STATION | OUT | | 21,100E | | 0 |
| 1952-53 | 101 | 0 | 0.3 | 220 | Dec 02 | 301 |
| 1953-54 | 445 | 0 | 2.9 | 2,060 | Feb 13 | 3,520 |
| 1954-55 | 240 | 0 | 1.1 | 820 | Jan 18 | 1,640 |
| 1955-56 | 4,300 | 0 | 12.9 | 9,390 | Jan 26 | 12,500 |
| 1956-57 | 393 | 0 | 1.2 | 896 | Jan 13 | 1,760 |
| 1957-58 | 1,510 | 0 | 31.6 | 22,890 | Apr 07 | 5,220 |
| 1958-59 | 615 | 0 | 3.2 | 2,340 | Jan 06 | 2,940 |

M Data missing
* Record incomplete
E Estimate
N.D. Not determined
** Record not computed
\+ Less than 0.05 acre feet or less than 0.05 cfs, but greater than 0

# RUNOFF – STREAM GAGING STATION PEAK FLOW

## SAN GABRIEL RIVER above Spring Street.
## STATION NO. F42B-R

| Season | Daily CFS | | | Total Runoff (Acre-feet) | Peak Flow | |
|---|---|---|---|---|---|---|
| | Maximum | Minimum | Mean | | Date | CFS |
| 1959-60 | 355 | 0 | 2.6 | 1,860 | Jan 12 | 2,180 |
| 1960-61 | 204 | 0 | 0.6 | 448 | Jan 26 | 1,780 |
| 1961-62 | 2,940 | 0 | 32 | 23,070 | Feb 11 | 7,350 |
| 1962-63 | 1,530 | 0 | 7.3 | 5,290 | Mar 17 | 4,120 |
| 1963-64 | 751 | 0 | 4.4 | 3,160 | Jan 22 | 2,570 |
| 1964-65 | 1,070 | 0 | 12.1 | 8,770 | Apr 09 | 4,540 |
| 1965-66 | 630 | 0 | 10.2 | 7,400 | Feb 06 | 1,950 |
| 1966-67 | 1,190 | 0 | 37.1 | 26,850 | Jan 23 | 4,760 |
| 1967-68 | 847 | + | 9.2 | 6,720 | Nov 21 | 3,280 |
| 1968-69 | 9,350 | + | 286 | 207,300 | Jan 25 | 11,700 |
| 1969-70 | 1,760 | + | 24.2 | 17,520 | Mar 05 | 5,550 |
| 1970-71 | 2,700 | + | 27.1 | 19,610 | Dec 19 | 5,550 |
| 1971-72 | 1,980 | 0.1 | 82.2 | 39,900 | Dec 24 | 8,580 |
| 1972-73 | 2,710 | 10.6 | 70.6 | 51,100 | Jan 16 | 5,680 |
| 1973-74 | 3,730 | 10.6 | 63.9 | 46,220 | Jan 04 | 6,090 |
| 1974-75 | 2,190 | 6.1 | 48.1 | 34,850 | Dec 04 | 7,190 |
| 1975-76 | 660 | 12.6 | 50.5 | 36,640 | Sep 10 | 3,890 |
| 1976-77 | 816 | 20 | 54.7 | 39,600 | Jan 03 | 4,460 |
| 1977-78 | * | * | * | * | | * |
| 1978-79 | * | * | * | * | Jan 31 | * |
| 1979-80 | 8,310 | 19.3 | 252.7 | 179,251 | Feb 14 | 11,000 |
| 1980-81 | * | * | * | * | | * |
| 1981-82 | 433 | 31.4 | 74.5 | 53,942 | Mar 14 | 1,260 |
| 1982-83 | 5,900 | 43.4 | 221 | 159,961 | Mar 01 | 13,400 |
| 1983-84 | 483 | 32.9 | 109 | 78,947 | Nov 01 | 4,470 |
| 1984-85 | 488 | 44.2 | 3.8 | 84,238 | Feb 09 | 1,480 |
| 1985-86 | * | * | * | * | Feb 15 | 3,930 |
| 1986-87 | 1,110 | 32.9 | 113.3 | 82,029 | Jan 04 | 4,990 |
| 1987-88 | 727 | 26 | 108.4 | 78,667 | Dec 04 | 2,220 |
| 1988-89 | 406 | 33.3 | 91 | 65,899 | Dec 25 | 2,080 |
| 1989-90 | 880 | 4.3 | 81 | 58,661 | Feb 17 | 1,610 |
| 1990-91 | 813 | 25.7 | 78.2 | 56,581 | Mar 01 | 1,610 |

M Data missing
* Record incomplete
E Estimate
N.D. Not determined
** Record not computed
+ Less than 0.05 acre feet or less than 0.05 cfs, but greater than 0

# RUNOFF – STREAM GAGING STATION PEAK FLOW

## SAN GABRIEL RIVER above Spring Street.
## STATION NO. F42B-R

| Season | Daily CFS | | | Total Runoff (Acre-feet) | Peak Flow | |
|---|---|---|---|---|---|---|
| | Maximum | Minimum | Mean | | Date | CFS |
| 1991-92 | 2,000 | 28.4 | 107 | 77,647 | Feb 12 | 6,330 |
| 1992-93 | 6,480 | 19.8 | 389 | 269,000 | Feb 19 | 10,100 |
| 1993-94 | * | * | * | * | | * |
| 1994-95 | 3,230 | 33.3 | 173 | 125,400 | Mar 11 | 10,200 |
| 1995-96 | 1,120 | 25.8 | 112 | 81,050 | Feb 20 | 4,330 |
| 1996-97 | 738 | 51 | 143 | 97,910 | Dec 11 | 2,410 |
| 1997-98 | 5,550 | 57 | 276 | 199,900 | Feb 07 | 12,500 |
| 1998-99 | 290 | 52 | 136 | 98,720 | Apr 11 | 1,120 |
| 1999-00 | 414 | 59 | 126 | 91,220 | Mar 08 | 2,240 |
| 2000-01 | 2,010 | 27 | 159 | 115,200 | Jan 11 | 8,480 |
| 2001-02 | 846 | 1.6 | 112 | 80,818 | Nov 24 | 4,065 |
| 2002-03 | 1,626 | 33.4 | 96.1 | 132,238 | Feb 12 | 5,190 |
| 2003-04 | 1,595 | 44.6 | 157 | 114,094 | Feb 26 | 5,780 |
| 2004-05 | 6,230 | 21 | 323 | 234,000 | Feb 20 | 10,100 |
| 2005-06 | 1,170 | 61 | 132 | 95,700 | Sep 11 | 10,772 |
| 2006-07 | 520 | 66.7 | 121 | 87,617 | Feb 13 | 4,611 |
| 2007-08 | 611 | 0 | 132.3 | 96,058 | Sep 10 | 3,156 |
| 2008-09 | 648 | 46.3 | 127 | 91,970 | Dec 10 | 14,700 |
| 2009-10 | 1,380 | 35 | 91.2 | 66,020 | Feb 06 | 5,910 |
| 2010-11 | 1,910 | 1.43 | 95.6 | 69,220 | Dec 20 | 11,200 |
| 2011-12 | 964 | 17.5 | 98.1 | 71,190 | Apr 09 | 2,290 |
| 2012-13 | 352 | 20.3 | 108 | 78,320 | Jun 17 | 1,640 |
| 2013-14 | 479 | 28.8 | 75.6 | 54,710 | Feb 27 | 1,500 |
| 2014-15 | 382 | 0.31 | 72.8 | 52,680 | May 14 | 1,340 |
| 2015-16 | 275 | 5.15 | 30.3 | 21,970 | Jan 05 | 1,090 |
| 2016-17 | 1,370 | 4.89 | 39.3 | 28,450 | Jan 22 | 6,810 |
| 2017-18 | 239 | 0.67 | 12.1 | 8,740 | Jan 09 | 904 |
| 2018-19 | 1,150 | 4.96 | 39.4 | 28,520 | Feb 14 | 3,550 |
| 2019-20 | 650 | 1.82 | 24.4 | 17,680 | Dec 26 | 3,040 |

M Data missing
* Record incomplete
E Estimate
N.D. Not determined
** Record not computed
+ Less than 0.05 acre feet or less than 0.05 cfs, but greater than 0

# RUNOFF – STREAM GAGING STATION PEAK FLOW

## SAN GABRIEL RIVER below San Gabriel River Pkwy.
## STATION NO. F263C-R

| Season | Daily CFS | | | Total Runoff | Peak Flow | |
|---|---|---|---|---|---|---|
| | Maximum | Minimum | Mean | (Acre-feet) | Date | CFS |
| 1928-29 | 93 | 0 | 3.9 | 2,850 | Mar 10 | 397 |
| 1929-30 | 152 | 0 | 4.8 | 3,490 | Jan 11 | 726 |
| 1930-31 | 106 | 0 | 3.4 | 2,490 | Feb 04 | 404 |
| 1931-32 | 1,620 | 0 | 18 | 13,060 | Feb 09 | 3,830 |
| 1932-33 | 286 | 0 | 4.2 | 3,040 | Jan 29 | 1,450 |
| 1933-34 | 5,580 | 0 | 23.4 | 16,950 | Jan 01 | 22,000 |
| 1934-35 | 746 | 0 | 16.8 | 12,190 | Oct 17 | 5,400 |
| 1935-36 | 355 | 0 | 6.3 | 4,590 | Feb 12 | 3,400 |
| 1936-37 | 2,440 | 0 | 47.3 | 34,240* | Feb 14 | 6,970 |
| 1937-38 | 11,400 | 0 | 131 | 94,810 | Mar 02 | 22,700E |
| 1938-39 | 672 | 0 | 34.1 | 24,620 | Sep 25 | 2,110 |
| 1939-40 | 544 | 0 | 27.8 | 20,180 | Feb 01 | 2,110 |
| 1940-41 | 2,700 | 0 | 139 | 100,900 | Mar 04 | 5,830 |
| 1941-42 | 149 | 0 | 39.5 | 28,630 | Dec 10 | 412 |
| 1942-43 | 10,500 | 0 | 289 | 209,600 | Jan 23 | 14,810 |
| 1943-44 | 5,350 | 0 | 144 | 104,200 | Feb 22 | 14,100 |
| 1944-45 | 744 | 0 | 58.7 | 42,520 | Nov 12 | 4,210 |
| 1945-46 | 1,660 | 0 | 47.5 | 34,370 | Dec 23 | 4,660 |
| 1946-47 | 2,810 | 0 | 62.7 | 45,420 | Dec 30 | 3,240 |
| 1947-48 | 48 | 0 | 11.8 | 8,590 | Feb 06 | 84 |
| 1948-49 | 77 | 0 | 8.9 | 6,470 | Jan 20 | 144 |
| 1949-50 | 272 | 0 | 5.7 | 4,130 | Feb 06 | 845 |
| 1950-51 | 16 | 0 | 0.8 | 558 | Jan 30 | 27 |
| 1951-52 | 2,860 | 0 | 70.2 | 50,900 | Jan 16 | 14,000 |
| 1952-53 | 327 | 0 | 19.2 | 13,880 | Dec 02 | 1,450 |
| 1953-54 | 901 | 0 | 15.2 | 10,990 | Feb 13 | 5,450 |
| 1954-55 | 323 | 0 | 12.8 | 9,250 | Jan 18 | 1,590 |
| 1955-56 | 4,030 | 0 | 33.1 | 24,050 | Jan 26 | 12,400 |
| 1956-57 | 558 | 0 | 24.9 | 18,000 | Mar 01 | 3,600 |
| 1957-58 | 2,210 | 0 | 114 | 82,190 | Apr 07 | 6,890 |
| 1958-59 | 777 | 0 | 16.9 | 33,960 | Jan 06 | 3,870 |
| 1959-60 | 449 | 0 | 49.7 | 36,100 | Jan 12 | 2,390 |

M Data missing
* Record incomplete
E Estimate
N.D. Not determined
** Record not computed
\+ Less than 0.05 acre feet or less than 0.05 cfs, but greater than 0

# RUNOFF – STREAM GAGING STATION PEAK FLOW

## SAN GABRIEL RIVER below San Gabriel River Pkwy.
## STATION NO. F263C-R

| Season | Daily CFS | | | Total Runoff | Peak Flow | |
|---|---|---|---|---|---|---|
| | Maximum | Minimum | Mean | (Acre-feet) | Date | CFS |
| 1960-61 | 421 | 0 | 65.9 | 47,700 | Jan 26 | 1,330 |
| 1961-62 | 2,840 | 0 | 142 | 103,100 | Feb 11 | 8,810 |
| 1962-63 | 1,080 | 0 | 58.6 | 42,430 | Mar 17 | 4,320 |
| 1963-64 | 881 | 0 | 63 | 45,700 | Jan 22 | 3,380 |
| 1964-65 | 1,410 | 0 | 107 | 77,270 | Apr 09 | 5,590 |
| 1965-66 | 916 | 0 | 76.4 | 55,320 | Feb 06 | 2,670 |
| 1966-67 | 2,270 | 0.3 | 86.7 | 62,800 | Jan 23 | 5,680 |
| 1967-68 | 222 | 3.2 | 36.2 | 26,240 | Nov 19 | 330 |
| 1968-69 | 10,210 | 15 | 379 | 274,300 | Jan 26 | 11,740 |
| 1969-70 | 1,880 | 13 | 109 | 79,110 | Mar 04 | 5,530 |
| 1970-71 | 2,170 | 2.6 | 75.4 | 54,590 | Dec 21 | 4,610 |
| 1971-72 | 1,900 | 0 | 45.1 | 32,740 | Dec 24 | 6,970 |
| 1972-73 | 2,540 | 0 | 92.6 | 67,020 | Feb 11 | 5,620 |
| 1973-74 | 3,640 | 4 | 83.6 | 60,500 | Jan 04 | 6,170 |
| 1974-75 | 2,050 | 1 | 52.7 | 38,190 | Dec 04 | 7,520 |
| 1975-76 | 1,500 | 0 | 44.4 | 32,000 | | N.D. |
| 1976-77 | 739 | 0 | 23 | 16,670 | Jan 03 | 4,080 |
| 1977-78 | 6,630 | 0 | 353.4 | 256,222 | Mar 01 | 7,650 |
| 1978-79 | 338 | 2.3 | 51 | 36,943 | Jan 15 | 2,052 |
| 1979-80 | 9,140 | 6 | 283.9 | 201,315 | Feb 19 | 10,600 |
| 1980-81 | 336 | 3.8 | 33 | 23,902 | Mar 01 | 577 |
| 1981-82 | 290 | 0 | 32 | 23,162 | Mar 14 | 523 |
| 1982-83 | 4,740 | 7.7 | 163.1 | 118,084 | Mar 01 | 8,650 |
| 1983-84 | 152 | 3.8 | 30.6 | 22,254 | Oct 01 | 414 |
| 1984-85 | 387 | 3.1 | 31.1 | 22,522 | Dec 18 | 750 |
| 1985-86 | 598 | 0.5 | 59.4 | 31,244 | Sep 25 | 3,340 |
| 1986-87 | 1,060 | 0 | 30.3 | 21,994 | Jan 04 | 5,140 |
| 1987-88 | 559 | 0 | 32.7 | 23,684 | Apr 20 | 1,270 |
| 1988-89 | 570 | 0 | 28.9 | 20,899 | Dec 24 | 3,020 |
| 1989-90 | 612 | 0 | 39.6 | 28,677 | Feb 17 | 947 |
| 1990-91 | 787 | 0 | 34.7 | 24,904 | Feb 28 | 1,140 |
| 1991-92 | 1,320 | 0 | 42 | 30,460 | Feb 12 | 3,390 |

M Data missing
* Record incomplete
E Estimate
N.D. Not determined
** Record not computed
\+ Less than 0.05 acre feet or less than 0.05 cfs, but greater than 0

# RUNOFF – STREAM GAGING STATION PEAK FLOW

## SAN GABRIEL RIVER below San Gabriel River Pkwy.
## STATION NO. F263C-R

| Season | Daily CFS | | | Total Runoff (Acre-feet) | Peak Flow | |
|---|---|---|---|---|---|---|
| | Maximum | Minimum | Mean | | Date | CFS |
| 1992-93 | 6,460 | 0 | 377 | 273,200 | Jan 18 | 7,430 |
| 1993-94 | 387 | 0.2 | 35.9 | 26,000 | Jan 25 | 1,520 |
| 1994-95 | 2,470 | 0 | 146 | 105,900 | Mar 11 | 5,070 |
| 1995-96 | 794 | 1.6 | 47.8 | 34,720 | Jan 31 | 1,620 |
| 1996-97 | 1,210 | 0.7 | 73.9 | 53,530 | Dec 09 | 2,040 |
| 1997-98 | 5,450 | 2.4 | 233 | 168,600 | Feb 23 | 7,060 |
| 1998-99 | 350 | 0 | 35.5 | 25,720 | Feb 05 | 621 |
| 1999-00 | 607 | 0.1 | 58.6 | 42,560 | Jun 06 | 2,550 |
| 2000-01 | 1,240 | 0 | 68.3 | 49,420 | Feb 25 | 4,620 |
| 2001-02 | 766 | 0 | 47.3 | 34,260 | Nov 24 | 4,017 |
| 2002-03 | 1,576 | 0 | 45.2 | 32,731 | Feb 12 | 5,360 |
| 2003-04 | 1,259 | 0 | 34 | 24,869 | Feb 26 | 4,080 |
| 2004-05 | 5,800 | 0 | 306 | 222,000 | Feb 21 | 7,090 |
| 2005-06 | 1,280 | 3.7 | 71.7 | 51,940 | Jan 02 | 5,868 |
| 2006-07 | 374 | 0 | 57.7 | 39,685 | Feb 21 | 980 |
| 2007-08 | 510 | 0 | 50.5 | 36,623 | Dec 07 | 2,288 |
| 2008-09 | 767 | 0 | 28.8 | 20,860 | Dec 15 | 1,840 |
| 2009-10 | 528 | 0 | 36.8 | 26,530 | Jan 20 | 1,450 |
| 2010-11 | 1,160 | 0 | 80.2 | 58,060 | Dec 22 | 3,140 |
| 2011-12 | 455 | 0.22 | 26.8 | 19,460 | Oct 05 | 1,290 |
| 2012-13 | 365 | 0 | 8.36 | 6,030 | Jan 24 | 1,750 |
| 2013-14 | 289 | 0 | 3.42 | 2,470 | Feb 27 | 657 |
| 2014-15 | 532 | 0 | 45.7 | 33,080 | Dec 02 | 1,670 |
| 2015-16 | 436 | 0 | 17.8 | 12,920 | Mar 07 | 1,810 |
| 2016-17 | 667 | 0 | 37.4 | 27,100 | Feb 17 | 2,450 |
| 2017-18 | 633 | 0 | 7.01 | 5,080 | Mar 22 | 2,240 |
| 2018-19 | 1,270 | 0 | 46.7 | 33,840 | Feb 02 | 2,350 |
| 2019-20 | 905 | 0 | 24.8 | 18,000 | Apr 10 | 2,770 |

M Data missing
* Record incomplete
E Estimate
N.D. Not determined
** Record not computed
\+ Less than 0.05 acre feet or less than 0.05 cfs, but greater than 0

# RUNOFF – STREAM GAGING STATION PEAK FLOW

## SAN GABRIEL RIVER at Foothill Blvd.
## STATION NO. F190-R

| Season | Daily CFS | | | Total Runoff | Peak Flow | |
|---|---|---|---|---|---|---|
| | Maximum | Minimum | Mean | (Acre-feet) | Date | CFS |
| 1931-32 | N.D. | 0 | N.D. | 76,220* | | N.D. |
| 1932-33 | 2,530 | 0 | 15.7 | 11,400 | Jan 19 | 10,000 |
| 1933-34 | 3,150 | 0 | 20.3 | 14,690 | Jan 01 | 5,550 |
| 1934-35 | 448 | 0 | 81.7 | 59,220 | Apr 08 | 1,080 |
| 1935-36 | 169 | 0 | 21.1 | 15,300 | Feb 02 | 572 |
| 1936-37 | 1,610 | 0 | 162 | 117,400 | Feb 19 | 2,050 |
| 1937-38 | 22,200 | 0 | 387.2 | 280,300* | Mar 02 | 62,000E |
| 1938-39 | 220 | 0 | 15 | 10,850 | Jan 05 | 267 |
| 1939-40 | 388 | 0 | 13.7 | 9,980 | Jun 25 | 400 |
| 1940-41 | 4,090 | 0 | 304 | 220,100 | Mar 04 | 5,280 |
| 1941-42 | 312 | 0 | 5.5 | 3,990 | Apr 20 | 345 |
| 1942-43 | 10,400E | 0 | 318 | 230,200 | Feb 23 | 11,400 |
| 1943-44 | 2,750 | 0 | 163 | 118,300 | Feb 22 | 4,840 |
| 1944-45 | 844 | 0 | 22.9 | 16,620 | Feb 02 | 1,080 |
| 1945-46 | 1,190 | 0 | 58.1 | 42,060 | Dec 23 | 1,670 |
| 1946-47 | 3,000 | 0 | 65.6 | 47,520 | Dec 28 | 3,200 |
| 1947-48 | 1,010 | 0 | 14.3 | 10,370 | Jun 02 | 1,120 |
| 1948-49 | 0 | 0 | 0 | 0 | | 0 |
| 1949-50 | 20 | 0 | 0.1 | 67 | Dec 18 | 192 |
| 1950-51 | 0 | 0 | 0 | 0 | | 0 |
| 1951-52 | 3,860 | 0 | 98.1 | 71,210 | Jan 18 | 4,670 |
| 1952-53 | 1,030 | 0 | 56.9 | 41,180 | Oct 28 | 1,080 |
| 1953-54 | 848 | 0 | 30.3 | 21,920 | Apr 16 | 2,160 |
| 1954-55 | 4 | 0 | + | 38 | Jan 18 | 12 |
| 1955-56 | 215 | 0 | 2 | 1,430 | Jan 26 | 800 |
| 1956-57 | 573 | 0 | 7.4 | 5,320 | Apr 17 | 585 |
| 1957-58 | 2,270 | 0 | 229 | 165,600 | Apr 05 | 2,520 |
| 1958-59 | 380 | 0 | 18.8 | 13,590 | Jan 06 | 3,390 |
| 1959-60 | 13 | 0 | 0.7 | 499 | Apr 27 | 90 |
| 1960-61 | 26 | 0 | 0.2 | 147 | Jan 26 | 48 |
| 1961-62 | 1,750 | 0 | 103 | 74,270 | Feb 12 | 2,260 |
| 1962-63 | 47 | 0 | 0.3 | 237 | Feb 09 | 301 |
| 1963-64 | 13 | 0 | 0.1 | 66 | Jan 22 | 56 |

M Data missing
* Record incomplete
E Estimate
N.D. Not determined
** Record not computed
\+ Less than 0.05 acre feet or less than 0.05 cfs, but greater than 0

# RUNOFF – STREAM GAGING STATION PEAK FLOW

## SAN GABRIEL RIVER at Foothill Blvd.
## STATION NO. F190-R

| Season | Daily CFS | | | Total Runoff | Peak Flow | |
|---|---|---|---|---|---|---|
| | Maximum | Minimum | Mean | (Acre-feet) | Date | CFS |
| 1964-65 | 293 | 0 | 11 | 7,940 | Sep 06 | 881 |
| 1965-66 | 8,680 | 0 | 240 | 173,700 | Nov 23 | 9,420 |
| 1966-67 | 2,080 | 0 | 249 | 180,000 | Dec 06 | 9,830 |
| 1967-68 | 232 | 0 | 33 | 23,940 | Nov 25 | 326 |
| 1968-69 | 22,700 | 0 | 794 | 575,300 | Jan 26 | N.D. |
| 1969-70 | 378 | 0 | 32.9 | 23,810 | Dec 21 | 411 |
| 1970-71 | 1,300 | 0 | 44 | 31,850 | Mar 01 | 1,400 |
| 1971-72 | 254 | 0 | 13.3 | 9,660 | Dec 08 | 254 |
| 1972-73 | 803 | 0 | 129 | 93,260 | Feb 11 | 1,010 |
| 1973-74 | 374 | 0 | 56.2 | 40,640 | Jan 07 | 670 |
| 1974-75 | 256 | 0 | 37.3 | 27,040 | | 256 |
| 1975-76 | 179 | 0 | 27.3 | 19,833 | Mar 01 | 10,002 |
| 1976-77 | 226 | 0 | 24.6 | 17,770 | Oct 14 | 248 |
| 1977-78 | * | * | 664.2 | 480,390 | Mar 04 | 24,300 |
| 1978-79 | 525 | 0 | 153 | 110,800 | Mar 27 | 720 |
| 1979-80 | 8,751 | 0 | 440 | 313,199 | | N.D. |
| 1980-81 | 362 | 0 | 23.8 | 17,247 | Jan 29 | 477 |
| 1981-82 | 573 | 0.1 | 79.8 | 57,237 | Mar 14 | 720 |
| 1982-83 | 12,810 | 0 | 16.1 | 356,249 | Mar 02 | 12,810 |
| 1983-84 | 432 | 1.8 | 50.9 | 36,846 | | N.D. |
| 1984-85 | 396 | 0 | 16.7 | 12,084 | | N.D. |
| 1985-86 | 805 | 0 | 117 | 84,632 | Mar 03 | 805 |
| 1986-87 | 112 | 0 | 31.2 | 22,594 | Mar 06 | 130 |
| 1987-88 | 544 | 0 | 62.3 | 444,868 | Jun 08 | 805 |
| 1988-89 | 464 | 0 | 49.6 | 35,849 | Feb 04 | 1,130 |
| 1989-90 | 145 | 0 | 26.7 | 19,337 | Apr 17 | 155 |
| 1990-91 | 567 | 0 | 74.1 | 52,908 | Jul 27 | 578 |
| 1991-92 | 1,580 | 0 | 200 | 144,865 | Feb 15 | 4,000 |
| 1992-93 | 8,600 | 0 | 598 | 432,600 | Feb 16 | 11,300 |
| 1993-94 | 393 | 0 | 53.4 | 38,660 | Feb 17 | 1,750 |
| 1994-95 | 2,180 | 0 | 278 | 201,100 | Mar 06 | 5,020 |
| 1995-96 | 531 | 0 | 91.7 | 66,560 | Oct 06 | 1,130 |
| 1996-97 | 563 | 0 | 62.3 | 45,100 | Dec 22 | 522 |

M Data missing
* Record incomplete
E Estimate
N.D. Not determined
** Record not computed
+ Less than 0.05 acre feet or less than 0.05 cfs, but greater than 0

# RUNOFF – STREAM GAGING STATION PEAK FLOW

## SAN GABRIEL RIVER at Foothill Blvd.
## STATION NO. F190-R

| Season | Daily CFS | | | Total Runoff (Acre-feet) | Peak Flow | |
|---|---|---|---|---|---|---|
| | Maximum | Minimum | Mean | | Date | CFS |
| 1997-98 | 7,660 | 0 | 319 | 230,900 | Feb 24 | 11,900 |
| 1998-99 | 216 | 0 | 28.2 | 20,420 | Jul 15 | 326 |
| 1999-00 | 272 | 0 | 40.9 | 29,690 | | N.D. |
| 2000-01 | 377 | 0 | 45.9 | 33,220 | Dec 13 | 730 |
| 2001-02 | 350 | 0 | 22 | 15,916 | Oct 31 | 460 |
| 2002-03 | 543 | 0 | 51.3 | 37,111 | Mar 16 | 669 |
| 2003-04 | 0 | 0 | 56 | 0 | Feb 26 | 806 |
| 2004-05 | 15,300 | 0 | 674 | 488,000 | Jan 11 | 18,800 |
| 2005-06 | 613 | 0 | 148 | 107,000 | May 11 | 662 |
| 2006-07 | 71 | 0.2 | 25.8 | 2,963 | Nov 15 | 142 |
| 2007-08 | 550 | 0 | 35.7 | 25,899 | Jul 29 | 1,242 |
| 2008-09 | 339 | 0 | 10.6 | 7,640 | Jul 27 | 731 |
| 2009-10 | 466 | 0 | 99.4 | 71,950 | Apr 14 | 493 |
| 2010-11 | 1,040 | 1.61 | 283 | 205,000 | Feb 26 | 1,650 |
| 2011-12 | 432 | 0 | 32.1 | 23,280 | Nov 29 | 1,720 |
| 2012-13 | 127 | 0 | 7.87 | 5,700 | Nov 06 | 136 |
| 2013-14 | 231 | 0 | 15.9 | 11,540 | Nov 25 | 238 |
| 2014-15 | 7 | 0 | 0.29 | 210 | Dec 17 | 13 |
| 2015-16 | 257 | 0 | 25.1 | 18,250 | Dec 25 | 271 |
| 2016-17 | 413 | 0 | 98.6 | 71,400 | Aug 01 | 422 |
| 2017-18 | 199 | 0 | 31 | 22,470 | Oct 31 | 222 |
| 2018-19 | 705 | 0 | 252 | 182,200 | Feb 28 | 847 |
| 2019-20 | 453 | 0 | 104 | 75,360 | Sep 14 | 501 |

M Data missing
* Record incomplete
E Estimate
N.D. Not determined
** Record not computed
+ Less than 0.05 acre feet or less than 0.05 cfs, but greater than 0

# RUNOFF – STREAM GAGING STATION PEAK FLOW

## SAN GABRIEL RIVER below Santa Fe Dam.
## STATION NO. E281-R

| Season | Daily CFS | | | Total Runoff (Acre-feet) | Peak Flow | |
|---|---|---|---|---|---|---|
| | Maximum | Minimum | Mean | | Date | CFS |
| 1942-43 | 6,700 | 0 | 242 | 175,100 | Jan 23 | 8,000 |
| 1943-44 | 2,550 | 0 | 133 | 96,890 | Feb 22 | 3,480 |
| 1944-45 | 783 | 0 | 14 | 10,140 | Feb 02 | 960 |
| 1945-46 | 1,140 | 0 | 45 | 32,560 | Dec 23 | 1,600 |
| 1946-47 | 2,550 | 0 | 53.3 | 38,600 | Dec 31 | 2,580 |
| 1947-48 | 809 | 0 | 11.2 | 8,120 | Jun 04 | 822 |
| 1948-49 | 0 | 0 | 0 | 0 | | |
| 1949-50 | 0 | 0 | 0 | 0 | | |
| 1950-51 | 0 | 0 | 0 | 0 | | |
| 1951-52 | 838 | 0 | 45.2 | 32,800 | Jan 17 | 861 |
| 1952-53 | 488 | 0 | 23.5 | 16,990 | Oct 30 | 598 |
| 1953-54 | 0 | 0 | 0 | 0 | | |
| 1954-55 | 0 | 0 | 0 | 0 | | |
| 1955-56 | 0 | 0 | 0 | 0 | | |
| 1956-57 | 0 | 0 | 0 | 0 | | |
| 1957-58 | 944 | 0 | 126 | 91,530 | Apr 05 | 1,210 |
| 1958-59 | 342 | 0 | 12.4 | 9,000 | Feb 24 | 606 |
| 1959-60 | 3 | 0 | 0.2 | 15 | Feb 02 | 7 |
| 1960-61 | 0 | 0 | 0 | 0 | | |
| 1961-62 | 437 | 0 | 46.2 | 33,450 | Feb 13 | 728 |
| 1962-63 | 0 | 0 | 0 | 0 | | |
| 1963-64 | 24 | 0.1 | 1 | 754 | | |
| 1964-65 | 0 | 0 | 0 | 0 | | |
| 1965-66 | 6,000 | 0 | 133 | 96,200 | Nov 23 | 11,000 |
| 1966-67 | 597 | 0 | 62.1 | 44,930 | Mar 23 | 614 |
| 1967-68 | 3 | 0 | + | 6 | Nov 29 | 30 |
| 1968-69 | 26,000 | 0 | 540 | 391,200 | Jan 26 | 30,900 |
| 1969-70 | 263 | 0 | 13.3 | 9,600 | Mar 04 | 458 |
| 1970-71 | 116 | 0 | 6.5 | 4,722 | Dec 17 | 116 |
| 1971-72 | 12 | 0 | 0.2 | 182 | Dec 12 | 25 |
| 1972-73 | 310 | 0 | 32.6 | 23,331 | Mar 22 | 340 |
| 1973-74 | 85 | 0 | 1.4 | 1,007 | Apr 15 | 146 |
| 1974-75 | No Data | from 1975 | to 1998 | | | |

M Data missing
* Record incomplete
E Estimate
N.D. Not determined
** Record not computed
\+ Less than 0.05 acre feet or less than 0.05 cfs, but greater than 0

# RUNOFF – STREAM GAGING STATION PEAK FLOW

## SAN GABRIEL RIVER below Santa Fe Dam.
## STATION NO. E281-R

| Season | Daily CFS | | | Total Runoff (Acre-feet) | Peak Flow | |
|---|---|---|---|---|---|---|
| | Maximum | Minimum | Mean | | Date | CFS |
| 1998-99 | 251 | 0 | 7.2 | 5,240 | | N.D. |
| 1999-00 | 61 | 0 | 7.4 | 5,380 | May 12 | 129 |
| 2000-01 | 129 | 0 | 0.8 | 611 | Feb 12 | 306 |
| 2001-02 | 394 | 0 | 3.8 | 2,791 | Nov 24 | 903 |
| 2002-03 | 73 | 0 | 2 | 1,453 | Aug 25 | 185 |
| 2003-04 | 93 | 0 | 1.2 | 896 | Dec 25 | 284 |
| 2004-05 | 14,700 | 0 | 441 | 320,000 | Jan 09 | 26,100 |
| 2005-06 | 409 | 0 | 11 | 7,930 | Nov 09 | 475 |
| 2006-07 | 0 | 0 | 0 | 0 | | |
| 2007-08 | 279 | 0 | 17.2 | 12,457 | Jul 22 | 425 |
| 2008-09 | 209 | 0 | 1.5 | 1,080 | Nov 26 | 544 |
| 2009-10 | 438 | 0 | 22.8 | 16,520 | May 03 | 486 |
| 2010-11 | 592 | 0 | 60.4 | 43,740 | Jul 14 | 702 |
| 2011-12 | 66 | 0 | 0.18 | 130 | Nov 29 | 197 |
| 2012-13 | ND | ND | ND | ND | ND | ND |
| 2013-14 | ND | ND | ND | ND | ND | ND |
| 2014-15 | ND | ND | ND | ND | ND | ND |
| 2015-16 | 59 | 0 | 0.43 | 309 | Jan 05 | 693 |
| 2016-17 | 103 | 0 | 3.58 | 2,580 | Jan 11 | 103 |
| 2017-18 | 10 | 0 | 0.028 | 21 | Jan 09 | 29 |
| 2018-19 | 636 | 0 | 42.7 | 30,910 | Mar 04 | 1,230 |
| 2019-20 | 89 | 0 | 0.82 | 596 | Apr 06 | 118 |

M Data missing
* Record incomplete
E Estimate
N.D. Not determined
** Record not computed
\+ Less than 0.05 acre feet or less than 0.05 cfs, but greater than 0

# RUNOFF – STREAM GAGING STATION PEAK FLOW

## SAN GABRIEL RIVER below Cogswell Dam.
## STATION NO. F209-R

| Season | Daily CFS | | | Total Runoff | Peak Flow | |
|---|---|---|---|---|---|---|
| | Maximum | Minimum | Mean | (Acre-feet) | Date | CFS |
| 1933-34 | 1,758 | 0 | 12.5 | 9,140 | Jan 01 | 4,401 |
| 1934-35 | 594 | 0.1 | 27.5 | 19,701 | Dec 13 | 1,260 |
| 1935-36 | 43 | 0.2 | 9.8 | 7,089 | Feb 17 | 45 |
| 1936-37 | 577 | 0.1 | 46.9 | 33,585 | Feb 14 | 752 |
| 1937-38 | 6,620 | 0.7 | 80.2 | 58,918 | Mar 02 | 25,000 |
| 1938-39 | 683 | 0.4 | 15.7 | 11,359 | Sep 25 | 1,190 |
| 1939-40 | 141 | 0.6 | 13 | 9,374 | Jan 15 | 1,240 |
| 1940-41 | 1,130 | 0.5 | 83.7 | 59,817 | Feb 22 | 1,160 |
| 1941-42 | 76 | 1 | 9.3 | 7,294 | Nov 01 | 90 |
| 1942-43 | 4,775 | 0.6 | 75.8 | 54,927 | Feb 23 | 7,300 |
| 1943-44 | 805 | 2.2 | 52.2 | 37,702 | Dec 28 | 1,210 |
| 1944-45 | 144 | 0.8 | 14.6 | 10,411 | Nov 20 | 157 |
| 1945-46 | 602 | 0.8 | 22.7 | 16,478 | Mar 30 | 814 |
| 1946-47 | 1,110 | 0.1 | 27.9 | 20,245 | Jan 06 | 1,240 |
| 1947-48 | 28 | 0.1 | 4.8 | 3,045 | May 17 | 79 |
| 1948-49 | 12 | 0.1 | 4.5 | 2,775 | Jul 21 | 67 |
| 1949-50 | 13 | 0.1 | 4.9 | 3,552 | Mar 02 | 84 |
| 1950-51 | 11 | 0.2 | 0.8 | 576 | Oct 24 | 52 |
| 1951-52 | 1,240 | 0.1 | 35.4 | 25,874 | Jan 18 | 2,000 |
| 1952-53 | 289 | 0.1 | 17 | 12,479 | Jan 09 | 328 |
| 1953-54 | 144 | 0.1 | 10.5 | 7,552 | Jan 26 | 146 |
| 1954-55 | 36 | 0.1 | 4.4 | 3,193 | Oct 04 | 149 |
| 1955-56 | 16 | 0.1 | 5 | 3,626 | | |
| 1956-57 | 139 | 0.1 | 5.3 | 3,789 | Nov 09 | 260 |
| 1957-58 | 1,170 | 0.1 | 48.3 | 34,531 | Apr 04 | 1,430 |
| 1958-59 | 120 | 0.2 | 8.8 | 6,245 | Feb 16 | 124 |
| 1959-60 | 13 | 0.1 | 2.8 | 2,018 | Jan 29 | 260 |
| 1960-61 | 6 | 0.1 | 0.8 | 579 | Jan 11 | 336 |
| 1961-62 | 1,810 | 0.1 | 34.5 | 23,811 | Feb 11 | 2,370 |
| 1962-63 | N.D. | | | | | |
| 1963-64 | 30 | 0.1 | 3.7 | 2,661 | Jun 24 | 788 |
| 1964-65 | 47 | 0.1 | 5.8 | 4,170 | Apr 09 | 53 |
| 1965-66 | 1,120 | 0.3 | 56.9 | 41,365 | Nov 22 | 2,570 |

M Data missing
* Record incomplete
E Estimate
N.D. Not determined
** Record not computed
\+ Less than 0.05 acre feet or less than 0.05 cfs, but greater than 0

# RUNOFF – STREAM GAGING STATION PEAK FLOW

## SAN GABRIEL RIVER below Cogswell Dam.
## STATION NO. F209-R

| Season | Daily CFS | | | Total Runoff (Acre-feet) | Peak Flow | |
|---|---|---|---|---|---|---|
| | Maximum | Minimum | Mean | | Date | CFS |
| 1966-67 | 1,040 | 0.3 | 45.1 | 32,757 | Dec 06 | 2,460 |
| 1967-68 | N.D. | | | | | |
| 1968-69 | N.D. | | | | | |
| 1969-70 | N.D. | | | | | |
| 1970-71 | N.D. | | | | | |
| 1971-72 | N.D. | | | | | |
| 1972-73 | N.D. | | | | | |
| 1973-74 | N.D. | | | | | |
| 1974-75 | 34 | 2 | 11.5 | 8,299 | Oct 24 | 34 |
| 1975-76 | 33 | 2 | 6.9 | 4,999 | Sep 15 | 33 |
| 1976-77 | 29 | 1.4 | 6.9 | 5,021 | Oct 02 | 29 |
| 1977-78 | 3,550 | 1.9 | 3.9 | 86,060 | Mar 04 | 8,780 |
| 1978-79 | 495 | 2.3 | 33.3 | 24,094 | Mar 27 | 510 |
| 1979-80 | 1,920 | 2.5 | 81.5 | 33,673 | Feb 19 | 2,760 |
| 1980-81 | 235 | 0.4 | 10.6 | 7,704 | Apr 13 | 1,330 |
| 1981-82 | 1,110 | 0.4 | 12.5 | 9,059 | Mar 23 | 3,910 |
| 1982-83 | 3,470 | 5.3 | 3.5 | 78,268 | Mar 02 | 4,680 |
| 1983-84 | 115 | 4.4 | 0.6 | 12,497 | Dec 28 | 190 |
| 1984-85 | 94 | 1.3 | 8.8 | 6,352 | Jan 09 | 102 |
| 1985-86 | 535 | 4.6 | 21.2 | 15,314 | Mar 19 | 1,140 |
| 1986-87 | 62 | 2.8 | 91.3 | 2,807 | Nov 12 | 619 |
| 1987-88 | 202 | 2.3 | 19.7 | 11,249 | Jan 27 | 756 |
| 1988-89 | 39 | 2.1 | 7.5 | 4,681 | Feb 24 | 62 |
| 1989-90 | 7 | 1.4 | 2.4 | 1,718 | | |
| 1990-91 | 390 | 1 | 15.3 | 10,934 | Apr 03 | 417 |
| 1991-92 | 1,770 | 0.1 | 47.5 | 34,449 | Feb 12 | M |
| 1992-93 | 1,360 | 1 | 109 | 79,251 | Jan 14 | 1,550 |
| 1993-94 | 85 | 1 | 14.3 | 10,319 | Dec 02 | 86 |
| 1994-95 | 951 | 0.5 | 56.7 | 41,044 | Jan 10 | 1,740 |
| 1995-96 | 466 | 0.1 | 14.6 | 10,600 | Feb 21 | 938 |
| 1996-97 | 335 | 0.1 | 11.2 | 8,085 | Jan 22 | 651 |
| 1997-98 | 1,760 | 4.7 | 57.2 | 41,406 | Feb 24 | 2,590 |
| 1998-99 | 184 | 2.5 | 17.2 | 12,431 | Dec 01 | 935 |

M Data missing
* Record incomplete
E Estimate
N.D. Not determined
** Record not computed
\+ Less than 0.05 acre feet or less than 0.05 cfs, but greater than 0

# RUNOFF – STREAM GAGING STATION PEAK FLOW

## SAN GABRIEL RIVER below Cogswell Dam.
## STATION NO. F209-R

| Season | Daily CFS | | | Total Runoff (Acre-feet) | Peak Flow | |
|---|---|---|---|---|---|---|
| | Maximum | Minimum | Mean | | Date | CFS |
| 1999-00 | 14 | 0.5 | 7.4 | 5,400 | Feb 20 | 47 |
| 2000-01 | 22 | 7.6 | 14.4 | 10,410 | Feb 13 | 37 |
| 2001-02 | 14 | 0.8 | 5.4 | 3,931 | Nov 13 | 26 |
| 2002-03 | 25 | 0.3 | 11.5 | 8,285 | May 28 | 232 |
| 2003-04 | 34 | 0.8 | 9.3 | 6,783 | Oct 29 | 330 |
| 2004-05 | 3,220 | 1.6 | 134 | 96,800 | Jan 11 | 5,370 |
| 2005-06 | 69 | 12 | 22.4 | 15,130 | May 09 | 69 |
| 2006-07 | 13 | 0.8 | 3.7 | 2,657 | Oct 17 | 17 |
| 2007-08 | 33 | 0.6 | 18.6 | 13,527 | Aug 21 | 104 |
| 2008-09 | 28 | 2.2 | 8.6 | 6,230 | Jun 17 | 2,950 |
| 2009-10 | 411 | 0.4 | 38.6 | 27,930 | Feb 06 | 1,270 |
| 2010-11 | 1,330 | 8.7 | 97.2 | 70,360 | Dec 22 | 1,450 |
| 2011-12 | 209 | 1.07 | 14.2 | 10,190 | Oct 18 | 220 |
| 2012-13 | 10 | 0 | 2.46 | 1,770 | Aug 26 | 2,010 |
| 2013-14 | 3.11 | 0.41 | 1.17 | 842 | May 23 | 11.8 |
| 2014-15 | 3.75 | 0 | 1.71 | 1,230 | Feb 23 | 45.7 |
| 2015-16 | 8.12 | 0 | 2.88 | 2,080 | Apr 27 | 45.1 |
| 2016-17 | 336 | 3.11 | 14.6 | 10,530 | Feb 17 | 1,330 |
| 2017-18 | 7.86 | 0.66 | 5.22 | 3,780 | Oct 18 | 25 |
| 2018-19 | 266 | 0.13 | 25.9 | 18,730 | Feb 04 | 985 |
| 2019-20 | 99 | 0 | 13.7 | 9,670 | Mar 20 | 905 |

M Data missing
* Record incomplete
E Estimate
N.D. Not determined
** Record not computed
\+ Less than 0.05 acre feet or less than 0.05 cfs, but greater than 0

# RUNOFF – STREAM GAGING STATION PEAK FLOW

## SAN GABRIEL RIVER above Whittier Narrow Dam.
## STATION NO. G44B-R

| Season | Daily CFS | | | Total Runoff (Acre-feet) | Peak Flow | |
|---|---|---|---|---|---|---|
| | Maximum | Minimum | Mean | | Date | CFS |
| 1991-92* | 1,080 | 0 | 18.7 | 13,303 | | |
| 1992-93 | 8,940 | 0 | 331 | 239,551 | | |
| 1993-94 | 1,030 | 0 | 19.2 | 13,929 | Mar 24 | 8,650 |
| 1994-95 | 6,130 | 0 | 112 | 80,834 | Jan 10 | 29,600 |
| 1995-96 | 5,280 | 0 | 33.9 | 24,639 | Feb 20 | 19,700 |
| 1996-97 | 2,300 | 0 | 31.7 | 22,917 | Dec 09 | 7,130 |
| 1997-98 | 7,200 | 0 | 107 | 77,632 | Feb 07 | 28,900 |
| 1998-99 | 355 | 0 | 4.3 | 3,136 | Nov 08 | 3,700 |
| 1999-00* | 1,510 | 0 | 23.2 | 16,816 | Feb 23 | 11,700 |
| 2000-01 | 2,360 | 0 | 28.3 | 20,490 | Jan 11 | 9,210 |
| 2001-02 | 1,063 | 0 | 3.5 | 2,563 | Nov 24 | 21,429 |
| 2002-03 | 3,907 | 0 | 48.8 | 35,378 | Dec 16 | 22,100 |
| 2003-04 | 3,475 | 0 | 28 | 20,670 | Feb 26 | 15,600 |
| 2004-05 | 18,200 | 0 | 374 | 271,000 | Jan 09 | 26,900 |
| 2005-06 | 1,470 | 0 | 17.2 | 12,480 | Mar 28 | 10,027 |
| 2006-07 | 592 | 13.4 | 309 | 2,451 | Apr 20 | 4,837 |
| 2007-08 | 3,040 | 0 | 34.7 | 25,223 | Jan 05 | 16,795 |
| 2008-09 | 1,860 | 0 | 26.8 | 19,390 | Feb 05 | 17,000 |
| 2009-10 | 3,380 | 0 | 41.7 | 30,150 | Jan 20 | 19,500 |
| 2010-11 | 4,510 | 0 | 76 | 55,040 | Dec 22 | 22,700 |
| 2011-12 | 1,010 | 0 | 12.7 | 9,190 | Oct 05 | 6,750 |
| 2012-13 | 263 | 0 | 1.53 | 1,110 | Dec 03 | 1,010 |
| 2013-14 | 1,640 | 0 | 5.76 | 4,170 | Feb 28 | 7,320 |
| 2014-15 | 975 | 0 | 10.1 | 7,350 | Dec 02 | 6,750 |
| 2015-16 | 1,420 | 0 | 9.77 | 7,090 | Jan 05 | 7,350 |
| 2016-17 | 5,250 | 0 | 55.4 | 40,100 | Jan 22 | 24,400 |
| 2017-18 | 1,680 | 0 | 8 | 5,790 | Jan 09 | 11,500 |
| 2018-19 | 5,120 | 0 | 48.7 | 35,270 | Feb 14 | 17,300 |
| 2019-20 | 2,640 | 0 | 23.9 | 17,350 | Dec 26 | 11,300 |

M Data missing
* Record incomplete
E Estimate
N.D. Not determined
** Record not computed
+ Less than 0.05 acre feet or less than 0.05 cfs, but greater than 0

# RUNOFF – STREAM GAGING STATION PEAK FLOW

## SAN GABRIEL RIVER below Morris Dam.
## STATION NO. U8-R

| Season | Daily CFS | | | Total Runoff (Acre-feet) | Peak Flow | |
|---|---|---|---|---|---|---|
| | Maximum | Minimum | Mean | | Date | CFS |
| 1895-96 | 134 | 0 | N.D. | N.D. | | |
| 1896-97 | 1,760 | 0 | 95.6 | 69,200 | | N.D. |
| 1897-98 | 1,600 | 0 | 9.6 | 6,920 | | N.D. |
| 1898-99 | 16 | 0 | 0.1 | 74 | | N.D. |
| 1899-00 | 49 | 0 | 0.4 | 272 | | N.D. |
| 1900-01 | 5,170 | 0 | 94.1 | 68,100 | Feb 05 | N.D. |
| 1901-02 | 318 | 0 | 4.3 | 3,100 | | 6,250 |
| 1902-03 | 2,940 | 0 | 104 | 74,900 | | N.D. |
| 1903-04 | 1,070 | 0 | 9.3 | 6,720 | | N.D. |
| 1904-05 | 2,940 | 0 | 172 | 124,000 | | N.D. |
| 1905-06 | 7,950 | 0 | 262 | 190,000 | | N.D. |
| 1906-07 | 6,730 | 0 | 406 | 293,000 | | N.D. |
| 1907-08 | 1,160 | 0 | 46.4 | 33,700 | | N.D. |
| 1908-09 | 7,030 | 0 | 197 | 143,000 | | N.D. |
| 1909-10 | 12,400 | 0 | 137 | 99,100 | Jan 01 | 13,900 |
| 1910-11 | 9,100 | 0 | 321 | 231,000 | Mar 10 | 13,500 |
| 1911-12 | 2,950 | 0 | 55.5 | 40,300 | | N.D. |
| 1912-13 | 1,880 | 0 | 25.6 | 18,600 | | N.D. |
| 1913-14 | 11,800 | 0 | 359 | 260,000 | Feb 20 | 18,100 |
| 1914-15 | 1,110 | 0 | 108 | 77,900 | Jan 29 | 2,770 |
| 1915-16 | 22,300 | 0 | 315 | 228,000 | Jan 18 | 40,000 |
| 1916-17 | 3,900 | 0 | 49.3 | 35,700 | | N.D. |
| 1917-18 | 4,940 | 0 | 123 | 88,600 | Mar 17 | 8,680 |
| 1918-19 | 76 | 0 | 3.2 | 2,290 | Feb 11 | 230 |
| 1919-20 | 2,400 | 0 | 94.6 | 68,700 | Mar 02 | 5,000 |
| 1920-21 | 2,050 | 0 | 40.1 | 29,000 | Mar 14 | 4,000 |
| 1921-22 | 16,000 | 0 | 505 | 365,000 | Dec 19 | 22,300 |
| 1922-23 | 2,250 | 0 | 44 | 31,800 | Dec 13 | 3,670 |
| 1923-24 | 253 | 0 | 3.5 | 2,540 | Mar 26 | 510 |
| 1924-25 | 588 | 0 | 4.2 | 3,030 | Mar 04 | 3,000 |
| 1925-26 | 5,530 | 0 | 113 | 81,700 | Apr 07 | 14,900 |
| 1926-27 | 11,400 | 0 | 123 | 88,900 | Feb 16 | 18,200 |

M Data missing
* Record incomplete
E Estimate
N.D. Not determined
** Record not computed
\+ Less than 0.05 acre feet or less than 0.05 cfs, but greater than 0

# RUNOFF – STREAM GAGING STATION PEAK FLOW

## SAN GABRIEL RIVER below Morris Dam.
## STATION NO. U8-R

| Season | Daily CFS | | | Total Runoff | Peak Flow | |
|---|---|---|---|---|---|---|
| | Maximum | Minimum | Mean | (Acre-feet) | Date | CFS |
| 1927-28 | 672 | 0 | 4.1 | 2,940 | Feb 04 | 1,810 |
| 1928-29 | 411 | 0 | 10 | 7,210 | Mar 10 | 895 |
| 1929-30 | 396 | 0 | 21.5 | 15,600 | Mar 15 | 586 |
| 1930-31 | 601 | 0 | 9.5 | 6,900 | Apr 26 | 1,450 |
| 1931-32 | 5,830 | 0 | 120 | 87,200 | Feb 09 | 7,500 |
| 1932-33 | 1,630 | 0 | 21.9 | 15,900 | Jan 19 | 5,820 |
| 1933-34 | 2,380 | 0 | 30.4 | 22,080 | Jan 01 | 6,120 |
| 1934-35 | 460 | 0 | 102 | 74,080 | Feb 09 | 507 |
| 1935-36 | 224 | 0 | 31.6 | 22,980 | Apr 10 | 455 |
| 1936-37 | 1,770 | 0 | 195 | 141,100 | Feb 20 | 1,950 |
| 1937-38 | 21,660 | 0.1 | 415 | 300,200 | Mar 02 | 65,700 |
| 1938-39 | 316 | 6.5 | 53.5 | 38,680 | | N.D. |
| 1939-40 | 506 | 0 | 50.5 | 36,640 | Jun 24 | 506 |
| 1940-41 | 3,870 | 0 | 317 | 229,300 | Mar 04 | 4,460 |
| 1941-42 | 370 | 2.5 | 13.1 | 9,480 | Apr 20 | 422 |
| 1942-43 | 10,370 | 2 | 334 | 242,000 | Jan 23 | 12,100 |
| 1943-44 | 2,710 | 3.6 | 184 | 133,700 | Feb 22 | 5,170 |
| 1944-45 | 980 | 6.1 | 62.8 | 45,490 | Feb 06 | 988 |
| 1945-46 | 937 | 0.3 | 75.9 | 54,930 | Dec 23 | 980 |
| 1946-47 | 2,930 | 0 | 74.9 | 54,220 | Dec 31 | 2,980 |
| 1947-48 | 1,170 | 0 | 18.1 | 13,170 | Jun 02 | 1,320 |
| 1948-49 | 61 | 0 | 5.7 | 4,140 | Oct 27 | 79 |
| 1949-50 | 8 | 0 | 0.7 | 51 | Jul 31 | 8 |
| 1950-51 | 47 | 0 | 8.6 | 6,220 | Apr 27 | 168 |
| 1951-52 | 3,530 | 0 | 91.1 | 66,120 | | N.D. |
| 1952-53 | 1,190 | 0 | 69.4 | 50,240 | | N.D. |
| 1953-54 | 960 | 0 | 34.6 | 25,030 | Apr 16 | 9,420 |
| 1954-55 | 10 | 0 | 0.1 | 86 | Sep 26 | 10 |
| 1955-56 | 43 | 0 | 0.2 | 176 | Sep 30 | 45 |
| 1956-57 | 650 | 0 | 12.4 | 9,010 | Apr 14 | 656 |
| 1957-58 | 2,470 | 0 | 241 | 174,100 | Apr 05 | 2,780 |
| 1958-59 | 348 | 0 | 11.3 | 8,200 | Feb 24 | 364 |

M Data missing
* Record incomplete
E Estimate
N.D. Not determined
** Record not computed
\+ Less than 0.05 acre feet or less than 0.05 cfs, but greater than 0

# RUNOFF – STREAM GAGING STATION PEAK FLOW

## SAN GABRIEL RIVER below Morris Dam.
## STATION NO. U8-R

| Season | Daily CFS | | | Total Runoff | Peak Flow | |
|---|---|---|---|---|---|---|
| | Maximum | Minimum | Mean | (Acre-feet) | Date | CFS |
| 1959-60 | 0 | 0 | 0 | 0 | | 0 |
| 1960-61 | 8 | 0 | 1.7 | 1,250 | May 06 | 9 |
| 1961-62 | 1,520 | 0 | 102 | 73,590 | Feb 12 | 1,650 |
| 1962-63 | 27 | 0 | 1 | 712 | Sep 04 | 45 |
| 1963-64 | 22 | 0 | 0.2 | 160 | Aug 26 | 50 |
| 1964-65 | 276 | 0 | 10.7 | 981 | Jun 12 | 291 |
| 1965-66 | 7,260 | 0 | 225 | 162,900 | Nov 23 | 8,640 |
| 1966-67 | 3,750 | 0 | 232 | 167,900 | Dec 06 | 5,680 |
| 1967-68 | 236 | 0 | 31.7 | 23,030 | Nov 25 | 326 |
| 1968-69 | 19,300 | 0 | 750 | 543,000 | Feb 25 | 29,850 |
| 1969-70 | 1,060 | 0 | 52.4 | 37,970 | Feb 28 | 1,102 |
| 1970-71 | 434 | 0 | 31.4 | 22,760 | Jan 04 | 439 |
| 1971-72 | 299 | 0 | 15.3 | 11,090 | Dec 08 | 299 |
| 1972-73 | 849 | 0 | 131 | 94,790 | Mar 19 | 918 |
| 1973-74 | 310 | 0 | 60.8 | 44,010 | Nov 07 | 364 |
| 1974-75 | 248 | 0 | 29.7 | 21,500 | | 248 |
| 1975-76 | 191 | 0 | 28.8 | 20,870 | Mar 25 | 178 |
| 1976-77 | 267 | 0 | 21.8 | 15,760 | Oct 13 | 273 |
| 1977-78 | 10,800 | 0 | 630.1 | 456,170 | Mar 04 | 14,100 |
| 1978-79 | 504 | 0 | 149.2 | 108,000 | Apr 22 | 519 |
| 1979-80 | 8,310 | 0 | 473.3 | 337,410 | Feb 19 | 8,720 |
| 1980-81 | 415 | 0 | 37.8 | 27,335 | Dec 11 | 514 |
| 1981-82 | 586 | 0 | 90.2 | 65,284 | Mar 24 | 5,490 |
| 1982-83 | 11,600 | 0 | 15.9 | 352,733 | Mar 02 | 11,900 |
| 1983-84 | 485 | 0 | 2.2 | 48,419 | Oct 13 | 552 |
| 1984-85 | 464 | 0 | 48.5 | 35,100 | Jan 01 | 469 |
| 1985-86 | 831 | 0 | 131 | 94,778 | Feb 25 | 856 |
| 1986-87 | 186 | 0 | 60.8 | 43,995 | Feb 23 | 212 |
| 1987-88 | 253 | 0 | 94.1 | 67,673 | Jun 08 | 793 |
| 1988-89 | 434 | 0.4 | 68 | 49,058 | Jan 05 | 434 |
| 1989-90 | 166 | 0.1 | 64 | 46,101 | Apr 28 | 162 |
| 1990-91 | 785 | 0 | 113 | 80,999 | Jul 28 | 793 |

M Data missing
* Record incomplete
E Estimate
N.D. Not determined
** Record not computed
\+ Less than 0.05 acre feet or less than 0.05 cfs, but greater than 0

# RUNOFF – STREAM GAGING STATION PEAK FLOW

## SAN GABRIEL RIVER below Morris Dam.
## STATION NO. U8-R

| Season | Daily CFS | | | Total Runoff (Acre-feet) | Peak Flow | |
|---|---|---|---|---|---|---|
| | Maximum | Minimum | Mean | | Date | CFS |
| 1991-92 | 1,740 | 0.8 | 206 | 149,508 | Feb 15 | 3,460 |
| 1992-93 | 9,500 | 0 | 655 | 474,300 | Jan 14 | 9,500 |
| 1993-94 | 480 | 0 | 57.8 | 41,860 | Aug 02 | 1,490 |
| 1994-95 | * | * | * | * | | * |
| 1995-96 | 552 | 0.4 | 124 | 89,820 | Sep 25 | 1,220 |
| 1996-97 | 696 | 0.3 | 90.3 | 65,340 | Feb 02 | 1,620 |
| 1997-98 | 7,200 | 0 | 365 | 264,000 | Feb 24 | 10,300 |
| 1998-99 | 250 | 0 | 33.1 | 23,970 | Mar 01 | 3,140 |
| 1999-00 | 316 | 1.2 | 59.1 | 42,940 | May 01 | 834 |
| 2000-01 | 490 | 2 | 65.3 | 47,240 | May 09 | 1,240 |
| 2001-02 | 242 | 2.3 | 65.5 | 47,416 | Oct 31 | 1,183 |
| 2002-03 | 747 | 1.9 | 118 | 85,273 | Nov 14 | 1,070 |
| 2003-04 | 677 | 1.1 | 89 | 64,273 | Oct 06 | 683 |
| 2004-05 | 15,900 | 21 | 748 | 541,000 | Jan 11 | 20,700 |
| 2005-06 | 791 | 1.7 | 215 | 155,600 | May 11 | 868 |
| 2006-07 | 176 | 1.3 | 28.1 | 20,346 | Nov 16 | 176 |
| 2007-08 | 669 | 1.7 | 107.8 | 78,240 | Jul 29 | 2,190 |
| 2008-09 | 659 | 0.7 | 35.2 | 25,480 | Oct 07 | 1,990 |
| 2009-10 | 661 | 0 | 178 | 129,200 | Apr 14 | 1,850 |
| 2010-11 | 1,210 | 3.09 | 341 | 246,600 | Feb 25 | 1,780 |
| 2011-12 | 599 | 1.2 | 48.4 | 35,160 | Nov 29 | 2,330 |
| 2012-13 | 304 | 0 | 30.6 | 22,150 | Oct 15 | 305 |
| 2013-14 | 382 | 0 | 56.9 | 41,230 | Nov 13 | 834 |
| 2014-15 | 87 | 0 | 43.8 | 31,690 | Mar 12 | 982 |
| 2015-16 | 472 | 0 | 55.5 | 40,310 | Dec 23 | 482 |
| 2016-17 | 631 | 0 | 160 | 115,600 | Mar 20 | 1,130 |
| 2017-18 | 272 | 0 | 58.2 | 42,160 | Apr 05 | 800 |
| 2018-19 | 917 | 0 | 309 | 223,800 | Feb 27 | 982 |
| 2019-20 | 576 | 16 | 163 | 118,200 | Apr 01 | 879 |

M Data missing
* Record incomplete
E Estimate
N.D. Not determined
** Record not computed
+ Less than 0.05 acre feet or less than 0.05 cfs, but greater than 0

# RUNOFF – STREAM GAGING STATION PEAK FLOW

## San Gabriel River – West Fork at Toe of Cogswell Dam.
## STATION NO. F251-R

| Season | Daily CFS | | | Total Runoff (Acre-feet) | Peak Flow | |
|---|---|---|---|---|---|---|
| | Maximum | Minimum | Mean | | Date | CFS |
| 1934-35 | 20 | 0 | 4 | 2,890 | May 01 | 20 |
| 1935-36 | 41 | 0.1 | 9.3 | 6,728 | Feb 17 | 41 |
| 1936-37 | N.D. | | | | | |
| 1937-38 | N.D. | | | | | |
| 1938-39 | N.D. | | | | | |
| 1939-40 | N.D. | | | | | |
| 1940-41 | N.D. | | | | | |
| 1941-42 | N.D. | | | | | |
| 1942-43 | N.D. | | | | | |
| 1943-44 | N.D. | | | | | |
| 1944-45 | N.D. | | | | | |
| 1945-46 | N.D. | | | | | |
| 1946-47 | N.D. | | | | | |
| 1947-48 | N.D. | | | | | |
| 1948-49 | N.D. | | | | | |
| 1949-50 | N.D. | | | | | |
| 1950-51 | N.D. | | | | | |
| 1951-52 | N.D. | | | | | |
| 1952-53 | N.D. | | | | | |
| 1953-54 | N.D. | | | | | |
| 1954-55 | N.D. | | | | | |
| 1955-56 | N.D. | | | | | |
| 1956-57 | N.D. | | | | | |
| 1957-58 | N.D. | | | | | |
| 1958-59 | N.D. | | | | | |
| 1959-60 | N.D. | | | | | |
| 1960-61 | N.D. | | | | | |
| 1961-62 | N.D. | | | | | |
| 1962-63 | N.D. | | | | | |
| 1963-64 | N.D. | | | | | |
| 1964-65 | N.D. | | | | | |
| 1965-66 | N.D. | | | | | |
| 1966-67 | N.D. | | | | | |

M Data missing
* Record incomplete
E Estimate
N.D. Not determined
** Record not computed
\+ Less than 0.05 acre feet or less than 0.05 cfs, but greater than 0

# RUNOFF – STREAM GAGING STATION PEAK FLOW

## San Gabriel River – West Fork at Toe of Cogswell Dam.
## STATION NO. F251-R

| Season | Daily CFS | | | Total Runoff (Acre-feet) | Peak Flow | |
|---|---|---|---|---|---|---|
| | Maximum | Minimum | Mean | | Date | CFS |
| 1967-68 | N.D. | | | | | |
| 1968-69 | N.D. | | | | | |
| 1969-70 | N.D. | | | | | |
| 1970-71 | N.D. | | | | | |
| 1971-72 | N.D. | | | | | |
| 1972-73 | N.D. | | | | | |
| 1973-74 | N.D. | | | | | |
| 1974-75 | 5 | 1.8 | 3.6 | 2,614 | VARIOUS | 5 |
| 1975-76 | 4 | 1.8 | 3.2 | 2,326 | Feb 09 | 4 |
| 1976-77 | 5 | 1.8 | 3.1 | 2,228 | | |
| 1977-78 | 17 | 2.2 | 0.2 | 4,131 | Feb 10 | 57 |
| 1978-79 | 7 | 2.5 | 0.1 | 2,801 | Mar 27 | 7 |
| 1979-80 | N.D. | | | | | |
| 1980-81 | 6 | 0 | 1.9 | 1,364 | Oct 01 | 6 |
| 1981-82 | 10 | 0 | 5.1 | 3,683 | | 10 |
| 1982-83 | 14 | 4.2 | 0.3 | 5,635 | Mar 02 | 14 |
| 1983-84 | 8 | 1.5 | 0.2 | 3,383 | Oct 01 | 8 |
| 1984-85 | 5 | 1 | 3.4 | 2,433 | Dec 28 | 5 |
| 1985-86 | 5 | 2.9 | 4 | 2,877 | Feb 15 | 6 |
| 1986-87 | 4 | 2.2 | 31.8 | 1,927 | Oct 01 | 4 |
| 1987-88 | 4 | 1.8 | 35.5 | 2,142 | May 23 | 4 |
| 1988-89 | 3 | 1.7 | 2 | 1,449 | Oct 01 | 3 |
| 1989-90 | 3 | 1 | 1.9 | 1,344 | May 19 | 3 |
| 1990-91 | 5 | 0 | 0.7 | 510 | Mar 01 | 5 |
| 1991-92 | 5 | 0 | 0.8 | 570 | Apr 08 | 5 |
| 1992-93 | 22 | 0.2 | 11 | 7,996 | Jan 18 | 23 |
| 1993-94 | 11 | 0.2 | 3.1 | 2,243 | Oct 01 | 11 |
| 1994-95 | 4 | 0 | 0.7 | 502 | Aug 15 | 11 |
| 1995-96 | 2 | 0 | 0.1 | 66 | Feb 21 | 6 |
| 1996-97 | 13 | 0 | 5.5 | 4,006 | Apr 21 | 13 |
| 1997-98 | 31 | 2.4 | 16.1 | 11,655 | Feb 23 | 39 |
| 1998-99 | 22 | 1.3 | 9.5 | 6,897 | Oct 01 | 22 |
| 1999-00 | 12 | 0 | 4.3 | 3,102 | Apr 18 | 12 |

M Data missing
* Record incomplete
E Estimate
N.D. Not determined
** Record not computed
\+ Less than 0.05 acre feet or less than 0.05 cfs, but greater than 0

# RUNOFF – STREAM GAGING STATION PEAK FLOW

## San Gabriel River – West Fork at Toe of Cogswell Dam.
## STATION NO. F251-R

| Season | Daily CFS | | | Total Runoff (Acre-feet) | Peak Flow | |
|---|---|---|---|---|---|---|
| | Maximum | Minimum | Mean | | Date | CFS |
| 2000-01 | 14 | 1.8 | 7.6 | 5,520 | Apr 07 | 14 |
| 2001-02 | 8 | 0 | 2.9 | 2,070 | Nov 25 | 8 |
| 2002-03 | 14 | 0.3 | 5.8 | 4,190 | Mar 24 | 14 |
| 2003-04 | 6 | 0.5 | 3.1 | 2,262 | Mar 02 | 10 |
| 2004-05 | 34 | 1 | 18.6 | 13,500 | Jan 10 | 35 |
| 2005-06 | 29 | 7.5 | 17.7 | 12,850 | May 01 | 29 |
| 2006-07 | 10 | 0 | 3 | 2,154 | Oct 01 | 10 |
| 2007-08 | 121 | 0.1 | *4.8* | *3,477* | Jan 08 | 37 |
| 2008-09 | 9 | 0.2 | *2.2* | *1,560* | Sep 05 | 33 |
| 2009-10 | 29 | 0.01 | *12.1* | *8,770* | Jul 08 | 30 |
| 2010-11 | *22* | *3.2* | *10.7* | *7,730* | May 04 | 22 |
| 2011-12 | 8 | 0.78 | 390 | 2,830 | May 10 | 8 |
| 2012-13 | 5.52 | 0.01 | 1.49 | 1,080 | May 30 | 6 |
| 2013-14 | 2.17 | 0.42 | 1.22 | 883 | Oct 01 | 6.75 |
| 2014-15 | 1.99 | 0.75 | 1.5 | 1,080 | Jan 26 | 1.99 |
| 2015-16 | 5.58 | 0.62 | 2.43 | 1,770 | Aug 17 | 5.77 |
| 2016-17 | 12.3 | 0.62 | 7.62 | 5,520 | Apr 30 | 12.5 |
| 2017-18 | 6.75 | 0.27 | 3.64 | 2,630 | Oct 01 | 6.75 |
| 2018-19 | 21.9 | 0 | 11.1 | 8,010 | Dec 18 | 22.1 |
| 2019-20 | 28.1 | 3.48 | 11.4 | 8,030 | Jan 26 | 28.1 |

M Data missing
* Record incomplete
E Estimate
N.D. Not determined
** Record not computed
\+ Less than 0.05 acre feet or less than 0.05 cfs, but greater than 0

# RUNOFF – STREAM GAGING STATION PEAK FLOW

## SAN JOSE CHANNEL above Workman Mill Road.
## STATION NO. F312B-R

| Season | Daily CFS | | | Total Runoff | Peak Flow | |
|---|---|---|---|---|---|---|
| | Maximum | Minimum | Mean | (Acre-feet) | Date | CFS |
| 1955-56 | 1,830 | 0 | 5.6 | 4,070 | Jan 26 | 5,180 |
| 1956-57 | 190 | 0 | 1.1 | 795 | Mar 01 | 1,410 |
| 1957-58 | 1,210 | 0 | 19.4 | 14,060 | Apr 07 | 3,990 |
| 1958-59 | 487 | 0 | 4.4 | 3,210 | Jan 06 | 2,720 |
| 1959-60 | 253 | 0 | 4.7 | 3,430 | Apr 27 | 1,380 |
| 1960-61 | 103 | 0 | 0.6 | 403 | Jan 26 | 429 |
| 1961-62 | 1,220 | 0 | 13.2 | 9,540 | Feb 11 | 3,800 |
| 1962-63 | 581 | 0 | 7.6 | 5,530 | Mar 16 | 1,940 |
| 1963-64 | 483 | + | 6.8 | 4,900 | Jan 22 | 1,250 |
| 1964-65 | 1,080 | 0 | 14 | 10,110 | Apr 09 | 4,540 |
| 1965-66 | 1,640 | + | 21.1 | 15,290 | Dec 29 | 5,220 |
| 1966-67 | 2,290 | 2.8 | 36.3 | 26,260 | Jan 24 | 10,200 |
| 1967-68 | 2,180 | 6.4 | 24.6 | 17,870 | Mar 08 | 10,100 |
| 1968-69 | 4,370 | 9.3 | 73.2 | 52,980 | Feb 25 | 9,710 |
| 1969-70 | 898 | 8 | 28.7 | 20,490 | Mar 04 | 3,930 |
| 1970-71 | 1,180 | 5 | 22.4 | 16,190 | Dec 21 | 4,400 |
| 1971-72 | 988 | 3.9 | 17.4 | 12,650 | Dec 24 | 3,720 |
| 1972-73 | 1,820 | 7 | 38.4 | 27,830 | Feb 13 | 6,440 |
| 1973-74 | 1,970 | 8 | 33.3 | 24,060 | Jan 04 | 4,900 |
| 1974-75 | 1,260 | 5.2 | 64.4 | 46,650 | Dec 04 | 9,620 |
| 1975-76 | 1,200 | 5 | 25.6 | 18,310 | Sep 10 | 5,000 |
| 1976-77 | 816 | 3 | 23.2 | 16,820 | Aug 17 | 3,580 |
| 1977-78 | 2,740 | 5 | 74 | 53,613 | Mar 04 | 11,100 |
| 1978-79 | 2,420 | 5.6 | 43.9 | 31,812 | Jan 31 | 7,330 |
| 1979-80 | 3,150 | 6.3 | 81.4 | 57,830 | Feb 18 | 13,000 |
| 1980-81 | 1,240 | 12.6 | 96.2 | 69,674 | Mar 01 | 4,810 |
| 1981-82 | 1,140 | 8.6 | 34.1 | 24,673 | Mar 14 | 5,790 |
| 1982-83 | 2,720 | 11.8 | 65.8 | 47,646 | Feb 27 | 19,200 |
| 1983-84 | 1,050 | 8.6 | 28.3 | 20,538 | Oct 01 | 5,060 |
| 1984-85 | 927 | 8.6 | 38.6 | 27,929 | Dec 18 | 5,330 |
| 1985-86 | 1,850 | 10.2 | 51.8 | 37,499 | Feb 15 | 7,250 |
| 1986-87 | 1,900 | 7.8 | 38.4 | 27,787 | Jan 04 | 6,980 |
| 1987-88 | 1,700 | 6.3 | 35.3 | 25,633 | Jan 17 | 7,850 |

M Data missing
* Record incomplete
E Estimate
N.D. Not determined
** Record not computed
\+ Less than 0.05 acre feet or less than 0.05 cfs, but greater than 0

# RUNOFF – STREAM GAGING STATION PEAK FLOW

## SAN JOSE CHANNEL above Workman Mill Road.
## STATION NO. F312B-R

| Season | Daily CFS | | | Total Runoff (Acre-feet) | Peak Flow | |
|---|---|---|---|---|---|---|
| | Maximum | Minimum | Mean | | Date | CFS |
| 1988-89 | 1,100 | 7.4 | 59.2 | 42,258 | Dec 21 | 4,800 |
| 1989-90 | 3,060 | 7.8 | 80.6 | 58,322 | Feb 17 | 7,700 |
| 1990-91 | 1,960 | 7.1 | 68 | 48,938 | Mar 01 | 7,270 |
| 1991-92 | 2,370 | 7.3 | 83 | 60,221 | Feb 11 | 16,800 |
| 1992-93 | 4,370* | 7.0* | * | * | Jan 07 | 20,200 |
| 1993-94 | * | * | * | * | | * |
| 1994-95 | 2,480 | 22.7 | 105 | 75,660 | Jan 10 | 11,400 |
| 1995-96 | 1,630 | 0 | 44.4 | 32,260 | Feb 20 | 10,100 |
| 1996-97 | 868 | 1.8 | 40.4 | 29,240 | Jan 25 | 4,440 |
| 1997-98 | 1,760 | 11 | 70.7 | 51,170 | Feb 07 | 14,500 |
| 1998-99 | 314 | 3.4 | 26.1 | 18,980 | Nov 28 | 2,150 |
| 1999-00 | 1,220 | 6.9 | 81.1 | 58,900 | Apr 18 | 6,480 |
| 2000-01 | 3,320E | 6.9* | 83.5E | 60,440E | | N.D. |
| 2001-02 | 1,025 | 8.9 | 74.3 | 53,897 | Nov 24 | 11,784 |
| 2002-03 | 1,983 | 8 | 61.7 | 44,691 | Dec 16 | 9,720 |
| 2003-04 | 1,843 | 1.9 | 53 | 38,388 | Feb 26 | 7,980 |
| 2004-05 | 2,390 | 9.2 | 114 | 82,700 | Feb 19 | 10,500 |
| 2005-06 | 1,480 | 12 | 104 | 75,240 | Jan 02 | 9,293 |
| 2006-07 | 565 | 9.4 | 71.3 | 51,638 | Apr 20 | 3,230 |
| 2007-08 | 1,120 | 4 | 46.7 | 33,891 | Jan 05 | 5,833 |
| 2008-09 | 1,020 | 7.2 | 36.5 | 26,430 | Feb 05 | 11,200 |
| 2009-10 | 2,510 | 4.7 | 97.6 | 70,660 | Jan 18 | 15,100 |
| 2010-11 | 2,860 | 3.54 | 103 | 74,490 | Dec 22 | 12,900 |
| 2011-12 | 665 | 5.95 | 30.8 | 22,380 | Mar 17 | 4,330 |
| 2012-13 | 377 | 4.74 | 22.6 | 16,350 | Mar 08 | 2,160 |
| 2013-14 | 1,100 | 2.96 | 17.8 | 12,890 | Feb 28 | 3,420 |
| 2014-15 | 712 | 2.49 | 25.6 | 18,510 | Jul 19 | 4,850 |
| 2015-16 | 594 | 5.33 | 23.5 | 17,060 | Jan 06 | 3,920 |
| 2016-17 | 2,170 | 6.43 | 47 | 34,040 | Jan 22 | 12,600 |
| 2017-18 | 908 | 1.59 | 16.1 | 11,620 | Jan 09 | 3,090 |
| 2018-19 | 1,830 | 2 | 39.3 | 28,430 | Feb 14 | 6,430 |
| 2019-20 | 1,010 | 0 | 27.8 | 20,200 | Dec 26 | 4,540 |

M Data missing
* Record incomplete
E Estimate
N.D. Not determined
** Record not computed
+ Less than 0.05 acre feet or less than 0.05 cfs, but greater than 0

# RUNOFF – STREAM GAGING STATION PEAK FLOW

**SANTA ANITA CREEK below Santa Anita Dam.**
**STATION NO. F119C-R**

| Season | Daily CFS | | | Total Runoff | Peak Flow | |
|---|---|---|---|---|---|---|
| | Maximum | Minimum | Mean | (Acre-feet) | Date | CFS |
| 1935-36 | 52 | 0.1 | 3.5 | 2,530 | N.D. | N.D. |
| 1936-37 | 140 | 0.1 | 11.3 | 7,918 | Feb 15 | 141 |
| 1937-38 | 56 | 0 | 6.6 | 1,856 | | |
| 1938-39 | N.D. | | | | N.D. | N.D. |
| 1939-40 | N.D. | | | | N.D. | N.D. |
| 1940-41 | N.D. | | | | N.D. | N.D. |
| 1941-42 | N.D. | | | | N.D. | N.D. |
| 1942-43 | N.D. | | | | N.D. | N.D. |
| 1943-44 | N.D. | | | | N.D. | N.D. |
| 1944-45 | N.D. | | | | N.D. | N.D. |
| 1945-46 | N.D. | | | | N.D. | N.D. |
| 1946-47 | N.D. | | | | N.D. | N.D. |
| 1947-48 | N.D. | | | | N.D. | N.D. |
| 1948-49 | N.D. | | | | N.D. | N.D. |
| 1949-50 | 24 | 0 | 1.8 | 1,312 | N.D. | N.D. |
| 1950-51 | 5 | 0 | 0.7 | 498 | N.D. | N.D. |
| 1951-52 | 345 | 0.5 | 11.4 | 8,293 | N.D. | N.D. |
| 1952-53 | 37 | 0.8 | 2.4 | 1,728 | N.D. | N.D. |
| 1953-54 | 145 | 0 | 4.8 | 3,412 | N.D. | N.D. |
| 1954-55 | 27 | 0 | 2 | 1,437 | N.D. | N.D. |
| 1955-56 | 113 | 0.3 | 3 | 2,196 | Jan 29 | 120 |
| 1956-57 | 15 | 0.1 | 2 | 1,432 | Jan 13 | 15 |
| 1957-58 | 249 | 0.6 | 16.3 | 11,706 | N.D. | N.D. |
| 1958-59 | 38 | 0 | 2.9 | 2,030 | Feb 16 | 46 |
| 1959-60 | 25 | 0.1 | 1.6 | 1,143 | Aug 01 | 114 |
| 1960-61 | 19 | 0 | 0.6 | 405 | Jan 28 | 19 |
| 1961-62 | 265 | 0 | 7.7 | 5,358 | Feb 11 | 1,350 |
| 1962-63 | 36 | 0 | 2.6 | 1,847 | Feb 09 | 257 |
| 1963-64 | 31 | 0 | 1.6 | 1,151 | Feb 11 | 289 |
| 1964-65 | 45 | 0 | 2.8 | 1,992 | Apr 16 | 289 |
| 1965-66 | N.D. | | | | N.D. | N.D. |
| 1966-67 | N.D. | | | | N.D. | N.D. |
| 1967-68 | N.D. | | | | N.D. | N.D. |

M Data missing
* Record incomplete
E Estimate
N.D. Not determined
** Record not computed
\+ Less than 0.05 acre feet or less than 0.05 cfs, but greater than 0

# RUNOFF – STREAM GAGING STATION PEAK FLOW

**SANTA ANITA CREEK below Santa Anita Dam.**
**STATION NO. F119C-R**

| Season | Daily CFS | | | Total Runoff (Acre-feet) | Peak Flow | |
|---|---|---|---|---|---|---|
| | Maximum | Minimum | Mean | | Date | CFS |
| 1968-69 | N.D. | | | | N.D. | N.D. |
| 1969-70 | N.D. | | | | N.D. | N.D. |
| 1970-71 | N.D. | | | | N.D. | N.D. |
| 1971-72 | N.D. | | | | N.D. | N.D. |
| 1972-73 | N.D. | | | | N.D. | N.D. |
| 1973-74 | N.D. | | | | N.D. | N.D. |
| 1974-75 | 36 | 0.2 | 3.7 | 2,648 | May 13 | 109 |
| 1975-76 | 34 | 0.2 | 2 | 1,469 | Sep 27 | 9 |
| 1976-77 | 31 | 0.2 | 1.7 | 1,207 | Sep 19 | 264 |
| 1977-78 | 727 | 0 | 30 | 21,712 | N.D. | N.D. |
| 1978-79 | 47 | 0.2 | 8.5 | 6,184 | Jul 30 | 135 |
| 1979-80 | 600 | 0 | 25.5 | 18,435 | N.D. | N.D. |
| 1980-81 | 28 | 0.2 | 3.1 | 2,212 | Jun 15 | 24 |
| 1981-82 | 123 | 0.2 | 5 | 3,653 | Mar 17 | 141 |
| 1982-83 | 795 | 0.2 | 29.5 | 21,302 | Mar 02 | 1,189 |
| 1983-84 | 34 | 0.2 | 5 | 3,587 | Mar 22 | 157 |
| 1984-85 | 25 | 0.2 | 3.1 | 2,273 | Feb 14 | 29 |
| 1985-86 | 32 | 0.2 | 6.4 | 4,653 | Apr 29 | 232 |
| 1986-87 | N.D. | | | | N.D. | N.D. |
| 1987-88 | 37 | 0 | 3.3 | 2,395 | N.D. | N.D. |
| 1988-89 | 28 | 0 | 2.1 | 1,439 | Dec 20 | 28 |
| 1989-90 | 24 | 0 | 1 | 710 | N.D. | N.D. |
| 1990-91 | 103 | 0 | 3.2 | 2,353 | Mar 01 | 103 |
| 1991-92 | 459 | 0 | 13.3 | 9,640 | Feb 11 | 592 |
| 1992-93* | 16 | 0 | 3.1 | 929 | N.D. | N.D. |
| 1993-94 | 22 | 0 | 2 | 1,419 | May 26 | 146 |
| 1994-95 | 237 | 0 | 16.8 | 12,190 | Jan 11 | 408 |
| 1995-96 | 219 | 0 | 6.1 | 4,427 | Feb 21 | 310 |
| 1996-97 | 75 | 0 | 6.8 | 4,900 | Oct 30 | 146 |
| 1997-98 | 155 | 0 | 14.5 | 10,510 | May 13 | 155 |
| 1998-99* | 20 | 0 | 2.7 | 1,920 | N.D. | N.D. |
| 1999-00 | 50 | 0 | 2.8 | 2,050 | Feb 21 | 135 |
| 2000-01 | 97 | 0 | 2.9 | 2,090 | Jun 28 | 298 |

M Data missing
* Record incomplete
E Estimate
N.D. Not determined
** Record not computed
\+ Less than 0.05 acre feet or less than 0.05 cfs, but greater than 0

# RUNOFF – STREAM GAGING STATION PEAK FLOW

**SANTA ANITA CREEK below Santa Anita Dam.**
**STATION NO. F119C-R**

| Season | Daily CFS | | | Total Runoff (Acre-feet) | Peak Flow | |
|---|---|---|---|---|---|---|
| | Maximum | Minimum | Mean | | Date | CFS |
| 2001-02 | 23 | 0 | 2.1 | 1,392 | Oct 25 | 136 |
| 2002-03 | 0 | 0 | 3.4 | 0 | Mar 16 | 143 |
| 2003-04 | 69 | 0 | 2.1 | 1,523 | Dec 05 | 300 |
| 2004-05 | 1,330 | 0 | 37 | 26,800 | Jan 11 | 1,250 |
| 2005-06 | 53 | 0 | 6 | 4,370 | May 25 | 222 |
| 2006-07 | 24 | + | 1.9 | 1,239 | Mar 29 | 204 |
| 2007-08 | 165 | 0.3 | 7.9 | 5,680 | Jan 06 | 239 |
| 2008-09 | 35 | 0.8 | 4 | 2,930 | Feb 09 | 205 |
| 2009-10 | 47 | + | 6.3 | 4,550 | Feb 06 | 174 |
| 2010-11 | 192 | 0.01 | 12.3 | 8,910 | Dec 19 | 427 |
| 2011-12 | 47 | 0 | 2.95 | 2,140 | Apr 03 | 73 |
| 2012-13 | 46 | 0 | 0.77 | 560 | Jan 24 | 358 |
| 2013-14 | 13.2 | 0 | 0.61 | 445 | Feb 25 | 31.4 |
| 2014-15 | 17.6 | 0 | 0.64 | 466 | Dec 29 | 52.4 |
| 2015-16 | 20.3 | 0 | 0.7 | 505 | Jan 06 | 66.7 |
| 2016-17 | 70.8 | 0 | 3.79 | 2,740 | Jan 22 | 114 |
| 2017-18 | 18.8 | 0 | 0.93 | 672 | Mar 20 | 34.4 |
| 2018-19 | 120 | 0 | 7.92 | 5,730 | Jan 17 | 440 |
| 2019-20 | 34.3 | 0 | 4.97 | 3,610 | Apr 08 | 40.2 |

M Data missing
* Record incomplete
E Estimate
N.D. Not determined
** Record not computed
\+ Less than 0.05 acre feet or less than 0.05 cfs, but greater than 0

# RUNOFF – STREAM GAGING STATION PEAK FLOW

## SANTA ANITA WASH below Foothill Blvd.
## STATION NO. F260C-R

| Season | Daily CFS | | | Total Runoff (Acre-feet) | Peak Flow | |
|---|---|---|---|---|---|---|
| | Maximum | Minimum | Mean | | Date | CFS |
| 1935-36 | 0 | 0 | 0 | | | |
| 1936-37 | 140 | 0 | 10 | 6,448 | Feb 15 | 174 |
| 1937-38 | 468 | 0 | 3.4 | 2,330 | | |
| 1938-39 | 46 | 0 | 2 | 1,471 | Jan 05 | 128 |
| 1939-40 | 58 | 0 | 1.6 | 1,062 | Jan 08 | 248 |
| 1940-41 | 262 | 0 | 18.1 | 12,931 | Mar 04 | 482 |
| 1941-42 | 26 | 0 | 1 | 693 | Dec 29 | 65 |
| 1942-43 | 2,130 | 0 | 30 | 21,674 | Jan 23 | 3,800 |
| 1943-44 | 395 | 0 | 8.7 | 6,139 | Feb 22 | 747 |
| 1944-45 | 92 | 0 | 2.3 | 1,540 | Jun 25 | 225 |
| 1945-46 | 182 | 0 | 2 | 1,480 | Dec 23 | 350 |
| 1946-47 | 144 | 0 | 3.4 | 2,489 | Dec 29 | 289 |
| 1947-48 | N.D. | | | | | |
| 1948-49 | N.D. | | | | | |
| 1949-50 | N.D. | | | | | |
| 1950-51 | N.D. | | | | | |
| 1951-52 | N.D. | | | | | |
| 1952-53 | N.D. | | | | | |
| 1953-54 | N.D. | | | | | |
| 1954-55 | N.D. | | | | | |
| 1955-56 | N.D. | | | | | |
| 1956-57 | N.D. | | | | | |
| 1957-58 | 254 | 0 | 8.9 | 6,317 | | |
| 1958-59 | 66 | 0 | 0.7 | 475 | Jan 06 | 1,000 |
| 1959-60 | 10 | 0 | 0.2 | 161 | Jan 11 | 194 |
| 1960-61 | 10 | 0 | 0.1 | 96 | Nov 05 | 257 |
| 1961-62 | 584 | 0 | 7.3 | 4,983 | Feb 11 | 1,440 |
| 1962-63 | 43 | 0 | 0.6 | 408 | Feb 09 | 257 |
| 1963-64 | 32 | 0 | 0.6 | 423 | Jan 22 | 335 |
| 1964-65 | 27 | 0 | 0.6 | 447 | Apr 16 | 267 |
| 1965-66 | 481 | 0 | 10.5 | 7,589 | Dec 29 | 1,260 |
| 1966-67 | 489 | 0 | 14.8 | 10,772 | Dec 06 | 914 |
| 1967-68 | N.D. | | | | | |

M Data missing
* Record incomplete
E Estimate
N.D. Not determined
** Record not computed
+ Less than 0.05 acre feet or less than 0.05 cfs, but greater than 0

# RUNOFF – STREAM GAGING STATION PEAK FLOW

## SANTA ANITA WASH below Foothill Blvd.
## STATION NO. F260C-R

| Season | Daily CFS | | | Total Runoff (Acre-feet) | Peak Flow | |
|---|---|---|---|---|---|---|
| | Maximum | Minimum | Mean | | Date | CFS |
| 1968-69 | N.D. | | | | | |
| 1969-70 | N.D. | | | | | |
| 1970-71 | N.D. | | | | | |
| 1971-72 | N.D. | | | | | |
| 1972-73 | N.D. | | | | | |
| 1973-74 | N.D. | | | | | |
| 1974-75 | 43 | 0 | 0.5 | 379 | Dec 04 | 477 |
| 1975-76 | 54 | 0 | 0.8 | 584 | Feb 09 | 209 |
| 1976-77 | 36 | 0 | 0.6 | 415 | Oct 23 | 437 |
| 1977-78 | 937 | 0 | 41.6 | 30,147 | Feb 10 | 2,030 |
| 1978-79 | 29 | 0 | 2.3 | 1,686 | Feb 21 | 335 |
| 1979-80 | N.D. | | | | | |
| 1980-81 | 40 | 0 | 0.9 | 652 | Mar 19 | 411 |
| 1981-82 | 100 | 0 | 2.8 | 2,019 | Mar 17 | 346 |
| 1982-83 | 773 | 0 | 30.2 | 21,840 | Mar 02 | 1,340 |
| 1983-84 | 62 | 0 | 5.7 | 4,151 | Nov 01 | 398 |
| 1984-85 | 110 | 0 | 4.5 | 3,283 | Dec 19 | 378 |
| 1985-86 | 913 | 0 | 0 | 0 | | |
| 1986-87 | 64 | 0 | 2 | 1,415 | Jan 04 | 424 |
| 1987-88 | 41 | 0 | 1.3 | 939 | Jan 17 | 975 |
| 1988-89 | 22 | 0 | 1 | 674 | Dec 16 | 91 |
| 1989-90 | 28 | 0 | 0.7 | 537 | Feb 17 | 189 |
| 1990-91 | 53 | 0 | 0.8 | 570 | Feb 28 | 323 |
| 1991-92 | 593 | 0 | 27.7 | 20,116 | Feb 12 | 1,110 |
| 1992-93 | 572 | 0 | 33.8 | 24,439 | Jan 18 | 905 |
| 1993-94 | 59 | 0 | 5.8 | 4,192 | Feb 17 | 175 |
| 1994-95 | 215 | 0 | 15.7 | 11,369 | Mar 10 | 517 |
| 1995-96 | 236 | 0 | 9.4 | 5,846 | | |
| 1996-97 | 86 | 0 | 4.8 | 3,455 | Jan 26 | 252 |
| 1997-98 | 429 | 0 | 11.6 | 8,367 | | N.D. |
| 1998-99 | 3 | 0 | 0.1 | 49 | Jan 26 | 76 |
| 1999-00 | 63 | 0 | 1.7 | 1,258 | Feb 21 | 479 |
| 2000-01 | 89 | 0 | 1.3 | 930 | Jun 28 | 264 |

M Data missing
* Record incomplete
E Estimate
N.D. Not determined
** Record not computed
\+ Less than 0.05 acre feet or less than 0.05 cfs, but greater than 0

# RUNOFF – STREAM GAGING STATION PEAK FLOW

## SANTA ANITA WASH below Foothill Blvd.
## STATION NO. F260C-R

| Season | Daily CFS | | | Total Runoff (Acre-feet) | Peak Flow | |
|---|---|---|---|---|---|---|
| | Maximum | Minimum | Mean | | Date | CFS |
| 2001-02 | 2 | 0 | 0.6 | 426 | Nov 24 | 22 |
| 2002-03 | 4 | 0 | 0.1 | 10 | Mar 15 | 195 |
| 2003-04 | 64 | 0 | 0.8 | 566 | Feb 26 | 331 |
| 2004-05 | 1,210 | 0 | 23.6 | 17,100 | Jan 10 | 1,740 |
| 2005-06 | 30 | 0 | 1.3 | 971 | Jan 02 | 422 |
| 2006-07 | 5 | 0.2 | 0.5 | 394 | Feb 27 | 122 |
| 2007-08 | 88 | 0 | 1.9 | 1,355 | Jan 04 | 553 |
| 2008-09 | 31 | 0 | 0.8 | 618 | Feb 16 | 286 |
| 2009-10 | 58 | 0 | 1.5 | 1,050 | Feb 06 | 450 |
| 2010-11 | 158 | 0 | 6.1 | 4,410 | Dec 22 | 663 |
| 2011-12 | 13 | 0 | 0.49 | 355 | Apr 13 | 306 |
| 2012-13 | 7 | 0 | 0.22 | 158 | Oct 11 | 180 |
| 2013-14 | 14.9 | 0 | 0.094 | 68 | Feb 28 | 171 |
| 2014-15 | 9.8 | 0 | 0.17 | 121 | Dec 12 | 581 |
| 2015-16 | 23.8 | 0 | 0.19 | 135 | Jan 05 | 532 |
| 2016-17 | 33.6 | 0 | 0.96 | 695 | Feb 17 | 472 |
| 2017-18 | 8.3 | 0 | 0.095 | 68 | Mar 22 | 118 |
| 2018-19 | 106.0 | 0 | 2.34 | 1,690 | Jan 17 | 397 |
| 2019-20 | 19.4 | 0 | 0.36 | 260 | Apr 06 | 422 |

M Data missing
* Record incomplete
E Estimate
N.D. Not determined
** Record not computed
\+ Less than 0.05 acre feet or less than 0.05 cfs, but greater than 0

# RUNOFF – STREAM GAGING STATION PEAK FLOW

## SANTA CLARA RIVER at Old Road Bridge.
## STATION NO. F92C-R

| Season | Daily CFS | | | Total Runoff | Peak Flow | |
|---|---|---|---|---|---|---|
| | Maximum | Minimum | Mean | (Acre-feet) | Date | CFS |
| 1930-31 | 291 | 0.1 | 2.6 | 1,890 | Feb 07 | 2,310 |
| 1931-32 | 739 | 0.1 | 5.9 | 4,280 | Feb 09 | 2,090 |
| 1932-33 | 90 | 0 | 0.7 | 488 | Jan 19 | 618 |
| 1933-34 | 448 | + | 2.2 | 1,600 | Jan 01 | 3,870 |
| 1934-35 | 82 | + | 1.5 | 1,090 | Jan 05 | 608 |
| 1935-36 | 113 | 0 | 2.2 | 1,590 | Feb 23 | 833 |
| 1936-37 | 471 | 0 | 6.7 | 4,850 | Dec 27 | 3,410 |
| 1937-38 | 6,370 | + | 37.2 | 26,900 | Mar 02 | 24,000E |
| 1938-39 | 435E | + | 14.4 | 10,410 | Dec 15 | 4,620 |
| 1939-40 | 79 | 0.3 | 2.2 | 1,570 | Feb 01 | 676 |
| 1940-41 | 3,450 | 0.3 | 57.1 | 41,320 | Mar 04 | 5,050 |
| 1941-42 | 167 | 0.6 | 32.3 | 23,400 | Dec 28 | 443 |
| 1942-43 | 5,420 | 1.4 | 65.2 | 47,170 | Jan 23 | 15,000 |
| 1943-44 | 9,360 | 2 | 68.6 | 49,770 | Feb 22 | 22,200 |
| 1944-45 | 110 | 2.2 | 15.3 | 11,050 | Feb 02 | 317 |
| 1945-46 | 194 | 0.4 | 8.9 | 6,440 | Mar 30 | 500 |
| 1946-47 | 371 | 1 | 15.4 | 11,150 | Dec 26 | 1,620 |
| 1947-48 | 33.0E | 0.8 | 3.1 | 2,270 | Mar 24 | 350E |
| 1948-49 | 5 | 0.4 | 1.8 | 1,300 | Mar 11 | 10 |
| 1949-50 | 5 | 0.1 | 1.2 | 888 | Feb 06 | 9 |
| 1950-51 | 2 | + | 0.3 | 217 | Jan 29 | 6 |
| 1951-52 | 1,620 | + | 23.1 | 16,760 | Jan 16 | 7,600 |
| 1952-53 | 43 | 0.1 | 0.8 | 592 | Dec 01 | N.D. |
| 1953-54 | 104 | + | 1.6 | 1,160 | Jan 19 | 626 |
| 1954-55 | 96 | + | 0.8 | 612 | Jan 18 | 746 |
| 1955-56 | 184 | + | 1.4 | 1,000 | Jan 26 | 344 |
| 1956-57 | 195 | 0 | 1.4 | 1,020 | Feb 28 | 1,920 |
| 1957-58 | 1,440 | 0 | 14.7 | 10,620 | Apr 03 | 3,850 |
| 1958-59 | 215 | 0 | 1.3 | 940 | Jan 06 | 1,410 |
| 1959-60 | 12 | 0 | 0.4 | 288 | Apr 27 | 151 |
| 1960-61 | 58 | 0 | 0.7 | 533 | Nov 05 | 830 |
| 1961-62 | 1,690 | 0 | 14.5 | 10,470 | Feb 12 | 4,250 |
| 1962-63 | 105 | 0 | 1.3 | 965 | Mar 16 | 1,470 |

M Data missing
* Record incomplete
E Estimate
N.D. Not determined
** Record not computed
\+ Less than 0.05 acre feet or less than 0.05 cfs, but greater than 0

# RUNOFF – STREAM GAGING STATION PEAK FLOW

## SANTA CLARA RIVER at Old Road Bridge.
## STATION NO. F92C-R

| Season | Daily CFS | | | Total Runoff (Acre-feet) | Peak Flow | |
|---|---|---|---|---|---|---|
| | Maximum | Minimum | Mean | | Date | CFS |
| 1963-64 | 85 | 0 | 1.1 | 780 | Jan 22 | 860 |
| 1964-65 | 240 | 0 | 2.1 | 1,550 | Apr 08 | 1,260 |
| 1965-66 | 3,200 | 0 | 22 | 15,990 | Dec 29 | 11,600 |
| 1966-67 | 820 | + | 9.8 | 7,100 | Jan 24 | 3,000 |
| 1967-68 | 475 | 0 | 4.2 | 3,070 | Jan 24 | 2,810 |
| 1968-69 | N.D. | 0.2 | ** | 30,170E | Feb 25 | 31,800E |
| 1969-70 | 164 | 1 | 13.3 | 9,610 | Mar 01 | 900 |
| 1970-71 | 1,830 | 0.5 | 15.1 | 10,930 | Nov 29 | 8,150 |
| 1971-72 | 442 | 0.5 | 9.2 | 6,640 | Dec 27 | 2,200 |
| 1972-73 | 1,470 | 0.4 | 13 | 9,450 | Feb 11 | 4,760 |
| 1973-74 | 984 | 1 | 9.1 | 6,600 | Jan 07 | 2,440 |
| 1974-75 | 187 | 0.9 | 5.4 | 3,910 | Dec 04 | 1,120 |
| 1975-76 | 138 | + | 3.7 | 2,710 | Sep 10 | 999 |
| 1976-77 | 273 | + | 3.8 | 2,750 | May 08 | 2,510 |
| 1977-78 | * | * | * | * | Feb 10 | * |
| 1978-79 | 605 | 1 | 16 | 11,617 | Mar 28 | 3,370 |
| 1979-80 | * | * | * | * | | * |
| 1980-81 | NO RECORD | | | | | |
| 1981-82 | NO RECORD | | | | | |
| 1982-83 | 5,214 | 0.8 | 113.8 | 83,154 | Mar 01 | 14,925 |
| 1983-84 | * | * | * | * | | * |
| 1984-85 | 295 | 1 | 18.8 | 13,558 | Dec 19 | 1,820 |
| 1985-86 | 492 | 7.5 | 24.7 | 17,896 | Feb 14 | 1,050 |
| 1986-87 | 71 | 5.2 | 14.3 | 10,197 | Nov 18 | 444 |
| 1987-88 | 485 | 0 | 16.5 | 11,981 | Dec 04 | 1,450 |
| 1988-89 | 145 | 3.7 | 11.9 | 8,535 | Dec 16 | 876 |
| 1989-90 | 18 | 4.9 | 12.2 | 8,864 | Feb 17 | 523 |
| 1990-91 | 604 | 2.4 | 13.9 | 10,058 | Mar 01 | 2,750 |
| 1991-92 | * | * | * | * | | * |
| 1992-93 | * | * | * | * | | * |
| 1993-94 | * | * | * | * | | * |
| 1994-95 | * | * | * | * | | * |
| 1995-96 | * | * | * | * | | * |

M Data missing
* Record incomplete
E Estimate
N.D. Not determined
** Record not computed
+ Less than 0.05 acre feet or less than 0.05 cfs, but greater than 0

# RUNOFF – STREAM GAGING STATION PEAK FLOW

## SANTA CLARA RIVER at Old Road Bridge.
## STATION NO. F92C-R

| Season | Daily CFS | | | Total Runoff (Acre-feet) | Peak Flow | |
|---|---|---|---|---|---|---|
| | Maximum | Minimum | Mean | | Date | CFS |
| 1996-97 | 181 | 1.9 | 8.6 | 6,190 | Dec 22 | 2,000 |
| 1997-98 | 7,080 | 1.3 | 89.2 | 53,800 | Feb 23 | 19,000 |
| 1998-99 | 136 | 4.3 | 15.7 | 11,330 | Jan 31 | 1,610 |
| 1999-00 | 1,300 | 3 | 18.7 | 13,600 | Feb 23 | 8,770 |
| 2000-01 | 27 | 2.6 | 7.8 | 5,620 | Jan 24 | 30 |
| 2001-02 | 17 | 2.2 | 5.2 | 2,350 | Feb 17 | 38 |
| 2002-03 | 0 | 0 | 13.1 | 0 | Feb 12 | 7,290 |
| 2003-04 | 990 | 0.4 | 6.8 | 4,940 | Feb 26 | 5,900 |
| 2004-05 | 7,580 | 0.7 | 125 | 90,270 | Jan 09 | 20,900 |
| 2005-06 | 117 | 1.4 | 7 | 4,420 | Jan 02 | 707 |
| 2006-07 | 16 | 1.6 | 4.8 | 3,489 | Mar 21 | 217 |
| 2007-08 | 192 | 1.3 | 7.6 | 5,526 | Jan 27 | 560 |
| 2008-09 | 27 | 1.2 | 3.4 | 2,480 | Feb 16 | 168 |
| 2009-10 | 6 | 1.3 | 2.9 | 2,140 | Jan 20 | 55 |
| 2010-11 | 171 | 1.92 | 7.06 | 5,110 | Mar 31 | 1,690 |
| 2011-12 | 10 | 1.45 | 4.04 | 2,940 | Apr 18 | 42 |
| 2012-13 | 4 | 1.42 | 2.19 | 1,580 | Jan 02 | 4 |
| 2013-14 | 448 | 1.1 | 4.65 | 3,140 | Nov 21 | 793 |
| 2014-15 | | | | | | |
| 2015-16 | 201 | 0 | 4.63 | 3,360 | Jan 06 | 205 |
| 2016-17 | 1,160 | 0.1 | 17.5 | 12,640 | Feb 17 | 1,610 |
| 2017-18 | N.D. | N.D. | N.D. | N.D. | N.D. | N.D. |
| 2018-19* | 960 | 0.1 | 20.3 | 14,710 | Feb 03 | 960 |
| 2019-20* | 500 | 2 | 13 | 8,720 | Dec 26 | 500 |

M Data missing
* Record incomplete
E Estimate
N.D. Not determined
** Record not computed
+ Less than 0.05 acre feet or less than 0.05 cfs, but greater than 0

# RUNOFF – STREAM GAGING STATION PEAK FLOW

## SANTA ANITA WASH at Longden Avenue.
## STATION NO. F193B-R

| Season | Daily CFS | | | Total Runoff | Peak Flow | |
|---|---|---|---|---|---|---|
| | Maximum | Minimum | Mean | (Acre-feet) | Date | CFS |
| 1959-60 | 55 | + | 0.6 | 465 | Apr 27 | 534 |
| 1960-61 | 33 | 0 | 0.3 | 216 | Nov 12 | 314 |
| 1961-62 | 693 | 0 | 8.2 | 5,910 | Feb 11 | 1,780 |
| 1962-63 | 101 | 0 | 1 | 709 | Feb 09 | 621 |
| 1963-64 | 47 | 0 | 0.9 | 650 | Nov 20 | 581 |
| 1964-65 | 63 | 0 | 1.4 | 985 | Apr 09 | 518 |
| 1965-66 | 541 | + | 12 | 8,730 | Dec 29 | 1,380 |
| 1966-67 | 613 | + | 16 | 11,570 | Dec 06 | 1,180 |
| 1967-68 | 111 | + | 1.7 | 1,230 | Nov 19 | 816 |
| 1968-69 | 2,760 | + | 46.9 | 33,930 | Jan 25 | 6,850 |
| 1969-70 | 150 | + | 3.2 | 2,300 | Mar 02 | 1,290 |
| 1970-71 | 350 | + | 3.4 | 2,440 | Dec 21 | 590 |
| 1971-72 | 71 | 0 | 0.4 | 320 | Dec 24 | 324 |
| 1972-73 | 595 | 0 | 5.9 | 4,270 | Feb 27 | 1,630 |
| 1973-74 | 158 | + | 2.9 | 2,090 | Jan 07 | 518 |
| 1974-75 | 95 | 0 | 1.2 | 875 | Dec 04 | 943 |
| 1975-76 | 82 | 0 | 1.5 | 1,060 | Sep 11 | 766 |
| 1976-77 | 46 | 0 | 1 | 752 | Oct 23 | 694 |
| 1977-78 | 877 | 0 | 35.5 | 25,720 | Feb 10 | 2,350 |
| 1978-79 | 1,160 | 0.1 | 12.4 | 8,978 | Feb 21 | 1,730 |
| 1979-80 | 1,690 | 0.1 | 72.1 | 51,148 | Jan 29 | 2,090 |
| 1980-81 | 121 | 0 | 1.3 | 963 | Jan 29 | 1,100 |
| 1981-82 | 176 | 0 | 3.4 | 2,485 | Mar 17 | 1,060 |
| 1982-83 | 958 | 0 | 79.5 | 57,533 | Mar 02 | 2,240 |
| 1983-84 | 143 | 0.1 | 8.9 | 6,453 | Nov 01 | 656 |
| 1984-85 | 93 | 0 | 3 | 2,142 | Dec 19 | 517 |
| 1985-86 | 104 | 0.2 | 6.9 | 4,987 | Feb 14 | 379 |
| 1986-87 | 27 | 0 | 0.6 | 454 | Oct 02 | 858 |
| 1987-88 | 82 | 0 | 1.6 | 1,156 | Jan 17 | 858 |
| 1988-89 | 42 | 0 | 1 | 717 | Dec 16 | 180 |
| 1989-90 | 77 | 0 | 0.8 | 617 | Jan 13 | 463 |
| 1990-91 | 104 | 0 | 2.2 | 1,602 | Mar 01 | 490 |
| 1991-92 | 498 | 0 | 19.2 | 13,964 | Feb 12 | 1,320 |

M Data missing
* Record incomplete
E Estimate
N.D. Not determined
** Record not computed
+ Less than 0.05 acre feet or less than 0.05 cfs, but greater than 0

# RUNOFF – STREAM GAGING STATION PEAK FLOW

## SANTA ANITA WASH at Longden Avenue.
## STATION NO. F193B-R

| Season | Daily CFS | | | Total Runoff (Acre-feet) | Peak Flow | |
|---|---|---|---|---|---|---|
| | Maximum | Minimum | Mean | | Date | CFS |
| 1992-93 | 552 | 0 | 35.7 | 25,860 | Jan 18 | 1,370 |
| 1993-94 | 354 | 0 | 2.2 | 1,623 | Apr 27 | 404 |
| 1994-95 | 375 | 0 | 19.2 | 13,920 | Jan 10 | 1,070 |
| 1995-96 | 299 | 0 | 4.5 | 3,257 | Jan 31 | 1,550 |
| 1996-97 | 89 | + | 5.7 | 4,110 | Jan 26 | 443 |
| 1997-98 | 910 | + | 22.1 | 16,010 | Feb 06 | 883 |
| 1998-99 | 34 | 0 | 1 | 717 | Jan 26 | 230 |
| 1999-00 | 71 | + | 2.1 | 1,510 | Feb 21 | 581 |
| 2000-01 | 86 | + | 2.9 | 2,110 | Jan 11 | 430 |
| 2001-02 | 44 | 0 | 1.1 | 813 | Nov 24 | 611 |
| 2002-03 | 114 | 0 | 2.7 | 1,922 | Feb 13 | 741 |
| 2003-04 | 138 | 0 | 1.7 | 1,260 | Feb 26 | 664 |
| 2004-05 | 1,650 | 0 | 42.8 | 31,000 | Jan 10 | 2,610 |
| 2005-06 | 242 | 0 | 4.2 | 3,040 | Jan 02 | 840 |
| 2006-07 | 32 | 0 | 0.9 | 645 | Feb 11 | 289 |
| 2007-08 | 230 | 0 | 15.5 | 11,220 | Jan 04 | 1,250 |
| 2008-09 | 66 | 0 | 2 | 1,420 | Feb 16 | 656 |
| 2009-10 | 190 | 0 | 4.6 | 3,350 | Jan 18 | 742 |
| 2010-11 | 381 | 0.4 | 13.6 | 9,880 | Dec 22 | 996 |
| 2011-12 | 33 | 0 | 1.52 | 1,100 | Mar 17 | 538 |
| 2012-13 | 25 | 0 | 1.02 | 737 | Mar 08 | 256 |
| 2013-14 | 70.3 | 0 | 0.59 | 425 | Feb 28 | 411 |
| 2014-15 | 43.0 | 0 | 0.86 | 621 | Dec 12 | 799 |
| 2015-16 | 70.6 | 0 | 0.71 | 515 | Jan 05 | 840 |
| 2016-17 | 100.0 | 0 | 2.71 | 1,960 | Feb 17 | 909 |
| 2017-18 | 49.5 | 0 | 0.7 | 508 | Jan 09 | 318 |
| 2018-19 | 211.0 | 0 | 7.36 | 5,330 | Feb 02 | 790 |
| 2019-20 | 66.0 | 0 | 2.14 | 1,560 | Apr 06 | 1,030 |

M Data missing
* Record incomplete
E Estimate
N.D. Not determined
** Record not computed
\+ Less than 0.05 acre feet or less than 0.05 cfs, but greater than 0

# RUNOFF – STREAM GAGING STATION PEAK FLOW

## SANTA CLARA RIVER At Capra Road Railroad Crossing
## STATION NO. F93C-R

| Season | Daily CFS | | | Total Runoff (Acre-feet) | Peak Flow | |
|---|---|---|---|---|---|---|
| | Maximum | Minimum | Mean | | Date | CFS |
| 2013-14 | 51 | 0 | 0.3 | 214 | Feb 28 | 288 |
| 2014-15 | 16 | 0 | 0.09 | 65 | Jul 30 | 330 |
| 2015-16 | 6 | 0 | 0.03 | 22 | Jan 06 | 36 |
| 2016-17 | 909 | 0 | 14.6 | 10,550 | Jan 21 | 2,980 |
| 2017-18 | 0 | 0 | 0 | 0 | Jan 09 | 1 |
| 2018-19 | 79 | 0 | 4.29 | 3,100 | Feb 17 | 83 |
| 2019-20 | 43 | 0 | 1.54 | 1,120 | Apr 07 | 46 |

M Data missing
* Record incomplete
E Estimate
N.D. Not determined
** Record not computed
+ Less than 0.05 acre feet or less than 0.05 cfs, but greater than 0

# RUNOFF – STREAM GAGING STATION PEAK FLOW

## SANTA FE DIVERSION CHANNEL below Santa Fe Dam.
## STATION NO. F280-R

| Season | Daily CFS | | | Total Runoff (Acre-feet) | Peak Flow | |
|---|---|---|---|---|---|---|
| | Maximum | Minimum | Mean | | Date | CFS |
| 1943-44 | 253 | 0 | 20.9 | 15,180 | May 18 | 253 |
| 1944-45 | 0 | 0 | 0 | 0 | | 0 |
| 1945-46 | 479 | 0 | 31.2 | 22,610 | Sep 13 | 484 |
| 1946-47 | 446 | 0 | 16.8 | 12,200 | Nov 27 | 484 |
| 1947-48 | 786 | 0 | 10.9 | 7,880 | Jun 04 | 800 |
| 1948-49 | 0 | 0 | 0 | 0 | | 0 |
| 1949-50 | 0 | 0 | 0 | 0 | | 0 |
| 1950-51 | 0 | 0 | 0 | 0 | | 0 |
| 1951-52 | 381 | 0 | 3.2 | 2,280 | Mar 16 | 732 |
| 1952-53 | 819 | 0 | 10.7 | 7,720 | Nov 03 | 839 |
| 1953-54 | 750 | 0 | 11.5 | 8,350 | May 07 | 752 |
| 1954-55 | 0 | 0 | 0 | 0 | | 0 |
| 1955-56 | 0 | 0 | 0 | 0 | | 0 |
| 1956-57 | 452 | 0 | 4.7 | 3,400 | Apr 16 | 455 |
| 1957-58 | 621 | 0 | 27 | 19,530 | Apr 04 | 635 |
| 1958-59 | 0 | 0 | 0 | 0 | | 0 |
| 1959-60 | 0 | 0 | 0 | 0 | | 0 |
| 1960-61 | 0 | 0 | 0 | 0 | | 0 |
| 1961-62 | 547 | 0 | 12.7 | 9,190 | Feb 12 | 819 |
| 1962-63 | 0 | 0 | 0 | 0 | | 0 |
| 1963-64 | 0 | 0 | 0 | 0 | | 0 |
| 1964-65 | + | 0 | + | + | Sep 08 | 1 |
| 1965-66 | 348 | 0 | 10.4 | 7,540 | Jan 07 | 425 |
| 1966-67 | 227 | 0 | 21.3 | 15,470 | Dec 18 | 236 |
| 1967-68 | 1 | 0 | + | 33 | Nov 20 | 1 |
| 1968-69 | 268 | 0 | 33.6 | 24,340 | Apr 15 | 290 |
| 1969-70 | 55 | 0 | 1.9 | 1,360 | Mar 03 | 202 |
| 1970-71 | 90 | 0 | 3.4 | 2,430 | Dec 24 | 92 |
| 1971-72 | 95 | 0 | 1 | 697 | Jan 19 | 116 |
| 1972-73 | 222 | 0 | 13 | 9,410 | Feb 21 | 280 |
| 1973-74 | 233 | 0 | 6.4 | 4,650 | Apr 16 | 241 |
| 1974-75 | 24 | 0 | 0.6 | 466 | Apr 22 | 27 |
| 1975-76 | 0 | 0 | 0 | 0 | | 0 |

M Data missing
* Record incomplete
E Estimate
N.D. Not determined
** Record not computed
\+ Less than 0.05 acre feet or less than 0.05 cfs, but greater than 0

# RUNOFF – STREAM GAGING STATION PEAK FLOW

## SANTA FE DIVERSION CHANNEL below Santa Fe Dam.
## STATION NO. F280-R

| Season | Daily CFS | | | Total Runoff (Acre-feet) | Peak Flow | |
|---|---|---|---|---|---|---|
| | Maximum | Minimum | Mean | | Date | CFS |
| 1976-77 | 24 | 0 | 2 | 1,439 | Aug 17 | 52 |
| 1977-78 | * | * | 56.2 | 40,699 | Apr 21 | 432 |
| 1978-79 | 148 | 0 | 16.7 | 12,113 | May 01 | 195 |
| 1979-80 | 388 | 0 | 48.3 | 34,730 | Mar 02 | 440 |
| 1980-81 | 370 | 0 | 19.8 | 14,360 | Nov 20 | 384 |
| 1981-82 | 268 | 0 | 18 | 13,050 | Jun 17 | 284 |
| 1982-83 | 365 | 0 | 49.9 | 36,043 | Jul 13 | 400 |
| 1983-84 | 382 | 0 | 23.1 | 16,768 | Oct 14 | 453 |
| 1984-85 | 32 | 0 | 0.4 | 278 | Dec 19 | 57 |
| 1985-86 | 378 | 0 | 40.2 | 29,110 | Feb 27 | 391 |
| 1986-87 | 5 | 0 | 1.9 | 115 | Nov 18 | 7 |
| 1987-88 | 424 | 0 | 11.5 | 8,362 | Jun 09 | 429 |
| 1988-89 | 7 | 0 | 0.4 | 302 | May 11 | 11 |
| 1989-90 | 0 | 0 | 0 | 0 | | 0 |
| 1990-91 | 547 | 0 | 23.5 | 16,782 | Jul 31 | 566 |
| 1991-92 | 428 | 0 | 50.2 | 36,405 | Feb 04 | 450 |
| 1992-93 | 193 | 0 | 42 | 30,370 | Aug 09 | 215 |
| 1993-94 | 72 | 0 | 2.1 | 1,511 | Jul 29 | 129 |
| 1994-95 | 410 | 0 | 23.5 | 17,050 | Dec 04 | 414 |
| 1995-96 | 385 | 0 | 35.8 | 25,988 | Oct 05 | 397 |
| 1996 97 | 393 | 0 | 19.6 | 14,220 | Jul 22 | 407 |
| 1997-98 | 452 | 0 | 23.5 | 17,010 | May 19 | 467 |
| 1998-99 | 113 | 0 | 2.2 | 1,570 | Feb 10 | 225 |
| 1999-00 | 0 | 0 | 0 | 0 | | 0 |
| 2000-01 | 16 | 0 | 0.7 | 470 | Jan 08 | 179 |
| 2001-02 | 17 | 0 | 0.3 | 217 | Jan 16 | 22 |
| 2002-03 | 208 | 0 | 2.2 | 1,562 | Aug 12 | 326 |
| 2003-04 | 52 | 0 | 0.8 | 605 | Oct 09 | 56 |
| 2004-05 | 520 | 0 | 46 | 33,300 | Mar 09 | 540 |
| 2005-06 | 258 | 0 | 9.5 | 6,860 | Apr 27 | 280 |
| 2006-07 | | | | | | |
| 2007-08 | 251 | 0 | 7.5 | 5,447 | Sep 11 | 448 |
| 2008-09 | 328 | 0 | 8.3 | 6,030 | Oct 22 | 447 |

M Data missing
* Record incomplete
E Estimate
N.D. Not determined
** Record not computed
+ Less than 0.05 acre feet or less than 0.05 cfs, but greater than 0

# RUNOFF – STREAM GAGING STATION PEAK FLOW

## SANTA FE DIVERSION CHANNEL below Santa Fe Dam.
## STATION NO. F280-R

| Season | Daily CFS | | | Total Runoff (Acre-feet) | Peak Flow | |
|---|---|---|---|---|---|---|
| | Maximum | Minimum | Mean | | Date | CFS |
| 2009-10 | 88 | 0 | 1.98 | 1,430 | Sep 20 | 119 |
| 2010-11 | 326 | 0 | 41.2 | 29,860 | Apr 13 | 382 |
| 2011-12 | 312 | 0 | 11 | 7,950 | Nov 29 | 427 |
| 2012-13 | 3,535 | 0 | 0.25 | 184 | Nov 03 | 42 |
| 2013-14 | 0 | 0 | 0 | 0 | May 13 | 0 |
| 2014-15 | 0 | 0 | 0 | 0 | Feb 24 | 0 |
| 2015-16 | 88 | 0 | 1.1 | 801 | Dec 28 | 112 |
| 2016-17 | 377 | 0 | 25.7 | 18,590 | Aug 01 | 433 |
| 2017-18 | 0 | 0 | 0 | 0 | Oct 01 | 0 |
| 2018-19 | 312 | 0 | 38.8 | 28,080 | Jun 08 | 417 |
| 2019-20 | 326 | 0 | 37.3 | 27,080 | Sep 20 | 358 |

M Data missing
* Record incomplete
E Estimate
N.D. Not determined
** Record not computed
+ Less than 0.05 acre feet or less than 0.05 cfs, but greater than 0

# RUNOFF – STREAM GAGING STATION PEAK FLOW

## SANTIAGO CANYON CREEK above Little Rock Creek.
## STATION NO. F125-R

| Season | Daily CFS | | | Total Runoff | Peak Flow | |
|---|---|---|---|---|---|---|
| | Maximum | Minimum | Mean | (Acre-feet) | Date | CFS |
| 1953-54 | 24 | 0 | 0.9 | 631 | Jan 25 | 44 |
| 1954-55 | 13 | 0 | 0.8 | 602 | Feb 17 | 16 |
| 1955-56 | 41 | 0 | 0.6 | 406 | Jan 26 | 87 |
| 1956-57 | 7 | 0 | 0.3 | 199 | Jan 13 | 15 |
| 1957-58 | 58 | 0 | 3.2 | 2,280 | Apr 03 | 107 |
| 1958 59 | 10 | 0 | 0.5 | 386 | Feb 16 | 21 |
| 1959-60 | 1 | 0 | 0.1 | 75 | Feb 02 | 2 |
| 1960-61 | + | 0 | + | + | Aug 05 | 1 |
| 1961-62 | 118 | 0 | 1.3 | 945 | Feb 11 | 199 |
| 1962-63 | 1 | 0 | + | 19 | Apr 21 | 1 |
| 1963-64 | 0 | 0 | + | 10 | Apr 02 | 1 |
| 1964-65 | 4 | 0 | 0.1 | 87 | Apr 20 | 4 |
| 1965-66 | 78 | 0 | 1.3 | 926 | Dec 29 | 269 |
| 1966-67 | 38 | 0 | 1.4 | 982 | Dec 06 | 66 |
| 1967-68 | 10 | 0 | 0.5 | 380 | Nov 21 | 17 |
| 1968-69 | 345 | 0 | 5.8 | 4,170 | Jan 25 | 1,140 |
| 1969-70 | 14 | 0 | 0.6 | 455 | Mar 01 | 21 |
| 1970-71 | 7 | 0 | 0.4 | 290 | Nov 29 | 22 |
| 1971-72 | 3 | 0 | 0.1 | 75 | Dec 24 | 5 |
| 1972-73 | 72 | 0 | 0.9 | 640 | Feb 11 | 175 |
| 1973-74 | 4 | 0 | 0.2 | 144 | Jan 17 | 6 |
| 1974-75 | 4 | 0 | 0.2 | 121 | Mar 06 | 6 |
| 1975-76 | 14 | 0 | 0.1 | 55 | Sep 24 | 1,060 |
| 1976-77 | 6 | 0 | 0.1 | 83 | May 09 | 9 |
| 1977-78 | * | * | * | * | Feb 09 | * |
| 1978-79 | 23 | 0 | 1.4 | 986 | Mar 28 | 303 |
| 1979-80 | 67 | 0 | 3.1 | 2,227 | Feb 16 | 193 |
| 1980-81 | 3 | 0 | 0.2 | 158 | | N.D. |
| 1981-82 | 30 | 0 | 0.8 | 602 | | N.D. |
| 1982-83 | 152 | 0 | 5.6 | 4,022 | Mar 01 | 280 |
| 1983-84 | 11 | 0 | 1 | 711 | Dec 25 | 26 |
| 1984-85 | 40 | 0 | 0.5 | 347 | Dec 19 | 103 |
| 1985-86 | 14 | 0 | 0.5 | 337 | Jan 30 | 24 |

M Data missing
* Record incomplete
E Estimate
N.D. Not determined
** Record not computed
+ Less than 0.05 acre feet or less than 0.05 cfs, but greater than 0

# RUNOFF – STREAM GAGING STATION PEAK FLOW

**SANTIAGO CANYON CREEK above Little Rock Creek.**
**STATION NO. F125-R**

| Season | Daily CFS | | | Total Runoff (Acre-feet) | Peak Flow | |
|---|---|---|---|---|---|---|
| | Maximum | Minimum | Mean | | Date | CFS |
| 1986-87 | 1 | 0 | + | 11 | Mar 07 | 1 |
| 1987-88 | 17 | 0 | 3.3 | 204 | | N.D. |
| 1988-89 | 11 | 0 | 2.9 | 165 | Feb 09 | 86 |
| 1989-90 | 0 | 0 | 0 | 0 | | 0 |
| 1990-91 | 20 | 0 | 0.2 | 109 | | N.D. |
| 1991-92 | 51 | 0 | 0.9 | 627 | Feb 12 | 97 |
| 1992-93 | 177 | 0 | 5.9 | 4,266 | Feb 19 | 235 |
| 1993-94 | 2 | 0 | 0.3 | 248 | Feb 14 | 2 |
| 1994-95 | 77 | 0 | 1.9 | 1,379 | Mar 11 | 90 |
| 1995-96 | 56 | 0 | 0.5 | 335 | Mar 05 | 75 |
| 1996-97 | 12 | 0 | 0.2 | 120 | Jan 26 | 19 |
| 1997-98 | 121 | 0 | 4.2 | 3,050 | Feb 23 | 317 |
| 1998-99 | 3 | 0 | 0.3 | 246 | Jul 13 | 5 |
| 1999-00 | 6 | 0 | 0.1 | 98 | Apr 18 | 7 |
| 2000-01 | 23 | 0 | 0.6 | 454 | Mar 06 | 37 |
| 2001-02 | N.D. | | | | | |
| 2002-03 | 0 | 0 | 0.3 | 0 | Feb 12 | 52 |
| 2003-04 | 6 | 0 | 0.1 | 32 | Feb 26 | 21 |
| 2004-05 | 236 | 0 | 6.2 | 4,440 | Feb 21 | 470 |
| 2005-06 | 64 | 0 | 2.1 | 1,420 | Feb 28 | 95 |
| 2006-07 | | | | | | |
| 2007-08 | 94 | 0 | 2.7 | 1,961 | Feb 14 | 109 |
| 2008-09 | 6 | 0 | 0.1 | 87 | Nov 27 | 32 |
| 2009-10 | 62 | 0 | 2.7 | 1,990 | Feb 06 | 110 |
| 2010-11 | 99 | 0 | 30.1 | 21,780 | Jan 29 | 110 |
| 2011-12 | 7 | 0 | 0.51 | 367 | Feb 17 | 12 |
| 2012-13 | 1 | 0 | 0.094 | 68 | Mar 08 | 1 |
| 2013-14 | 22.8 | 0 | 0.2 | 142 | Mar 01 | 37.6 |
| 2014-15 | 0 | 0 | 0 | 0 | Oct 01 | 0 |
| 2015-16 | 0 | 0 | 0 | 0 | Oct 01 | 0 |
| 2016-17 | 85.5 | 0 | 2.08 | 1510 | Feb 17 | 129 |
| 2017-18 | 0 | 0 | 0 | 0 | Oct 01 | 0 |
| 2018-19 | 62.5 | 0 | 1.39 | 1000 | Feb 14 | 153 |

M Data missing
* Record incomplete
E Estimate
N.D. Not determined
** Record not computed
\+ Less than 0.05 acre feet or less than 0.05 cfs, but greater than 0

# RUNOFF – STREAM GAGING STATION PEAK FLOW

**SANTIAGO CANYON CREEK above Little Rock Creek.**
**STATION NO. F125-R**

| Season | Daily CFS | | | Total Runoff (Acre-feet) | Peak Flow | |
|---|---|---|---|---|---|---|
| | Maximum | Minimum | Mean | | Date | CFS |
| 2019-20 | 20.9 | 0 | 0.77 | 562 | Apr 10 | 27.7 |

M Data missing
* Record incomplete
E Estimate
N.D. Not determined
** Record not computed
+ Less than 0.05 acre feet or less than 0.05 cfs, but greater than 0

# RUNOFF – STREAM GAGING STATION PEAK FLOW

**SAWPIT CREEK below Sawpit Dam.**
**STATION NO. F278-R**

| Season | Daily CFS | | | Total Runoff (Acre-feet) | Peak Flow | |
|---|---|---|---|---|---|---|
| | Maximum | Minimum | Mean | | Date | CFS |
| 1941-42 | 1 | 0 | 0.1 | 30 | Mar 13 | 3 |
| 1942-43 | 186 | 0 | 4 | 2,860 | Jan 23 | 284 |
| 1943-44 | 50 | 0 | 1 | 667 | Feb 22 | 67 |
| 1944-45 | N.D. | | | | | |
| 1945-46 | 21 | 0 | 0.2 | 169 | Dec 23 | 36 |
| 1946-47 | 18 | 0 | 0.5 | 329 | Dec 26 | 26 |
| 1947-48 | N.D. | | | | | |
| 1948-49 | N.D. | | | | | |
| 1949-50 | N.D. | | | | | |
| 1950-51 | N.D. | | | | | |
| 1951-52 | N.D. | | | | | |
| 1952-53 | N.D. | | | | | |
| 1953-54 | N.D. | | | | | |
| 1954-55 | N.D. | | | | | |
| 1955-56 | N.D. | | | | | |
| 1956-57 | N.D. | | | | | |
| 1957-58 | N.D. | | | | | |
| 1958-59 | N.D. | | | | | |
| 1959-60 | N.D. | | | | | |
| 1960-61 | N.D. | | | | | |
| 1961-62 | N.D. | | | | | |
| 1962-63 | N.D. | | | | | |
| 1963-64 | N.D. | | | | | |
| 1964-65 | N.D. | | | | | |
| 1965-66 | N.D. | | | | | |
| 1966-67 | N.D. | | | | | |
| 1967-68 | N.D. | | | | | |
| 1968-69 | N.D. | | | | | |
| 1969-70 | N.D. | | | | | |
| 1970-71 | N.D. | | | | | |
| 1971-72 | N.D. | | | | | |
| 1972-73 | N.D. | | | | | |
| 1973-74 | N.D. | | | | | |

M Data missing
* Record incomplete
E Estimate
N.D. Not determined
** Record not computed
+ Less than 0.05 acre feet or less than 0.05 cfs, but greater than 0

# RUNOFF – STREAM GAGING STATION PEAK FLOW

**SAWPIT CREEK below Sawpit Dam.**
**STATION NO. F278-R**

| Season | Daily CFS | | | Total Runoff (Acre-feet) | Peak Flow | |
|---|---|---|---|---|---|---|
| | Maximum | Minimum | Mean | | Date | CFS |
| 1974-75 | 6 | 0.5 | 1.3 | 921 | Oct 04 | 9 |
| 1975-76 | 6 | 0.2 | 0.9 | 646 | Sep 11 | 20 |
| 1976-77 | 6 | 0.2 | 0.8 | 603 | Oct 22 | 36 |
| 1977-78 | 88 | 0.2 | 6.5 | 4,717 | Mar 04 | 132 |
| 1978-79 | 10 | 0 | 2.8 | 1,985 | Oct 02 | 55 |
| 1979-80 | 110 | 0 | 4.8 | 3,485 | Feb 06 | 216 |
| 1980-81 | 5 | 0 | 1.4 | 1,046 | Mar 19 | 9 |
| 1981-82 | 39 | 0.4 | 1.8 | 1,307 | Apr 26 | 72 |
| 1982-83 | 89 | 0 | 6.2 | 4,486 | Mar 01 | 269 |
| 1983-84 | 15 | 0 | 1.8 | 1,269 | May 07 | 63 |
| 1984-85 | 7 | 0.5 | 1.3 | 936 | Dec 19 | 14 |
| 1985-86 | 10 | 0 | 1.7 | 1,204 | Mar 08 | 13 |
| 1986-87 | N.D. | | | | | |
| 1987-88 | 4 | 0.4 | 1.7 | 1,193 | | |
| 1988-89 | 10 | 0.2 | 1 | 740 | | |
| 1989-90 | 6 | 0 | 0.8 | 545 | | |
| 1990-91 | 34 | 0 | 1.5 | 1,089 | | |
| 1991-92 | 44 | 0.4 | 2.6 | 1,910 | Feb 11 | 59 |
| 1992-93 | 77 | 1.1 | 8.8 | 6,393 | Feb 08 | 93 |
| 1993-94 | 4 | 1.4 | 2.1 | 1,555 | Jun 22 | 30 |
| 1994-95 | 80 | 1.5 | 4.9 | 3,552 | Mar 05 | 85 |
| 1995-96 | 32 | 0.1 | 3.1 | 2,247 | Feb 22 | 35 |
| 1996-97 | 11 | 1.5 | 2.7 | 1,952 | Jan 26 | 14 |
| 1997-98 | 89 | 1.7 | 4.2 | 3,039 | Feb 24 | 143 |
| 1998-99 | 3 | 0.7 | 2.2 | 1,580 | Jun 02 | 50 |
| 1999-00* | 4 | 0.7 | 1.7 | 1,262 | May 03 | 6 |
| 2000-01 | 8.1E | 0.45E | 1.47E | 1060E | Feb 13 | 15 |
| 2001-02 | 2 | 0.1 | 1 | 695 | Jan 27 | 8 |
| 2002-03 | 10 | 0.3 | 1.4 | 983 | Feb 12 | 28 |
| 2003-04 | 13 | 0.3 | 1 | 360 | Feb 26 | 45 |
| 2004-05 | 184 | 0.1 | 5.6 | 4,030 | Jan 09 | 260 |
| 2005-06 | 9 | 1.2 | 2.1 | 1,510 | Jan 02 | 22 |
| 2006-07 | 2 | 0.6 | 1.2 | 881 | Feb 27 | 3 |

M Data missing
* Record incomplete
E Estimate
N.D. Not determined
** Record not computed
\+ Less than 0.05 acre feet or less than 0.05 cfs, but greater than 0

# RUNOFF – STREAM GAGING STATION PEAK FLOW

**SAWPIT CREEK below Sawpit Dam.**
**STATION NO. F278-R**

| Season | Daily CFS | | | Total Runoff (Acre-feet) | Peak Flow | |
|---|---|---|---|---|---|---|
| | Maximum | Minimum | Mean | | Date | CFS |
| 2007-08 | 21 | 0.7 | 1.6 | 1,180 | Jan 05 | 161 |
| 2008-09 | 4 | 0.6 | 1.1 | 827 | Nov 25 | 7 |
| 2009-10 | 4 | 0.67 | 1.23 | 890 | Dec 12 | 11 |
| 2010-11 | 41 | 0.68 | 2.08 | 1,500 | Dec 20 | 226 |
| 2011-12 | 4 | 0.91 | 1.61 | 1,170 | Apr 04 | 11 |
| 2012-13 | 4 | 0.46 | 1.79 | 1,290 | Dec 08 | 8 |
| 2013-14 | 6.1 | 0.27 | 1.2 | 870 | Feb 28 | 10 |
| 2014-15 | 3.0 | 0.35 | 0.85 | 616 | May 14 | 5 |
| 2015-16 | 8.0 | 0.72 | 1.32 | 959 | Jan 05 | 20 |
| 2016-17 | 8.4 | 0.7 | 1.52 | 1,100 | Feb 17 | 30.5 |
| 2017-18 | 2.5 | 0.24 | 1.03 | 742 | Jan 09 | 3.1 |
| 2018-19 | 29.0 | 0.24 | 1.51 | 1,090 | Jan 17 | 165 |
| 2019-20 | 6.3 | 0.41 | 0.98 | 713 | Apr 06 | 21 |

M Data missing
* Record incomplete
E Estimate
N.D. Not determined
** Record not computed
\+ Less than 0.05 acre feet or less than 0.05 cfs, but greater than 0

# RUNOFF – STREAM GAGING STATION PEAK FLOW

## SAWPIT WASH below Live Oak Avenue.
## STATION NO. F194B-R

| Season | Daily CFS | | | Total Runoff (Acre-feet) | Peak Flow | |
|---|---|---|---|---|---|---|
| | Maximum | Minimum | Mean | | Date | CFS |
| 1960-61 | 50 | + | * | 263* | Jan 26 | 420 |
| 1961-62 | 573 | + | 16.6 | 11,980 | Feb 11 | 1,300 |
| 1962-63 | 137 | + | 1.6 | 1,180 | Feb 09 | 690 |
| 1963-64 | 83 | + | 1.6 | 1,190 | Jan 22 | 682 |
| 1964-65 | 95 | + | 2.1 | 1,500 | Apr 09 | 1,290 |
| 1965-66 | 243 | + | 7.3 | 9,240 | Dec 29 | 1,470 |
| 1966-67 | 298 | + | 22 | 16,020 | Dec 03 | 1,120 |
| 1967-68 | 130 | + | 2.1 | 1,520 | Nov 19 | 1,870 |
| 1968-69 | 1,270 | + | 53.7 | 38,870 | Jan 25 | 3,960 |
| 1969-70 | 773 | 0 | 6.7 | 4,830 | Feb 28 | 2,800 |
| 1970-71 | 196 | + | 5.8 | 4,190 | Nov 29 | 1,350 |
| 1971-72 | 142 | 0.1 | 2 | 1,450 | Dec 24 | 519 |
| 1972-73 | 381 | 0 | 16.8 | 12,130 | Feb 27 | 2,860 |
| 1973-74 | 265 | 0.1 | 9 | 6,490 | Jan 07 | 652 |
| 1974-75 | 180 | + | 2.8 | 2,010 | Dec 04 | 2,140 |
| 1975-76 | 101 | 0.1 | 1.8 | 1,310 | Sep 11 | 1,790 |
| 1976-77 | 118 | 0.1 | 3.8 | 2,732 | Oct 23 | 1,090 |
| 1977-78 | * | * | * | * | Feb 10 | * |
| 1978-79 | 160 | 0.2 | 20.3 | 14,687 | Feb 21 | 1,280 |
| 1979-80 | 886 | 0.2 | 50.2 | 35,952 | Feb 16 | 3,940 |
| 1980-81 | 376 | 0 | 23.1 | 16,742 | Jan 29 | 900 |
| 1981-82 | 257 | 0.1 | 18.1 | 13,029 | Mar 17 | 1,560 |
| 1982-83 | 530 | 0.1 | 56.4 | 40,867 | Mar 01 | 2,890 |
| 1983-84 | 294 | 0 | 20.4 | 14,767 | Oct 01 | 1,210 |
| 1984-85 | 122 | 0 | 2.6 | 1,873 | Dec 19 | 801 |
| 1985-86 | * | * | * | * | | * |
| 1986-87 | 99 | 0.1 | 1.2 | 857 | Oct 02 | 1,070 |
| 1987-88 | 385 | 0 | 12.9 | 9,344 | Dec 04 | 1,630 |
| 1988-89 | 76 | 0 | 1.6 | 1,167 | Dec 16 | 555 |
| 1989-90 | 147 | 0 | 1.3 | 909 | Jan 13 | 707 |
| 1990-91 | 331 | 0 | 17.3 | 12,646 | Aug 08 | 375 |
| 1991-92 | 325 | 0 | 36.8 | 26,730 | Feb 11 | 1,710 |
| 1992-93 | 352 | 0 | 42.4 | 30,690 | Jan 14 | 4,160 |

M Data missing
* Record incomplete
E Estimate
N.D. Not determined
** Record not computed
+ Less than 0.05 acre feet or less than 0.05 cfs, but greater than 0

# RUNOFF – STREAM GAGING STATION PEAK FLOW

**SAWPIT WASH below Live Oak Avenue.**
**STATION NO. F194B-R**

| Season | Daily CFS | | | Total Runoff (Acre-feet) | Peak Flow | |
|---|---|---|---|---|---|---|
| | Maximum | Minimum | Mean | | Date | CFS |
| 1993-94 | 72 | 0 | 3.7 | 2,671 | Mar 19 | 1,160 |
| 1994-95 | 495 | 0.1 | 29.2 | 21,160 | Jan 10 | 1,940 |
| 1995-96 | 530 | 0.2 | 44.1 | 32,020 | Jan 31 | 3,580 |
| 1996-97 | 393 | 0.1 | 22.6 | 16,350 | Jan 26 | 1,130 |
| 1997-98 | 452 | 0.2 | 32.6 | 23,570 | Feb 06 | 2,960 |
| 1998-99 | 142 | 0.2 | 3.5 | 2,500 | Jan 26 | 543 |
| 1999-00 | 127 | 0.1 | 4.1 | 2,960 | Apr 17 | 1,110 |
| 2000-01 | 187 | 0.1 | 3.4 | 2,440 | Jan 02 | 2,200 |
| 2001-02 | 122 | 0 | 1 | 710 | Nov 24 | 2,087 |
| 2002-03 | 293 | 0 | 6.1 | 4,382 | Mar 15 | 1,730 |
| 2003-04 | 236 | 0 | 2.9 | 2,118 | Feb 26 | 1,810 |
| 2004-05 | 478 | 0 | 44.3 | 32,000 | Feb 19 | 3,930 |
| 2005-06 | 221 | 0 | 12.5 | 9,040 | Apr 14 | 2,507 |
| 2006-07 | 71 | 0.1 | 1.4 | 1,014 | Feb 11 | 900 |
| 2007-08 | 321 | 0.1 | 11.1 | 8,031 | Jan 04 | 3,980 |
| 2008-09 | 327 | + | 10.1 | 7,300 | Feb 05 | 2,320 |
| 2009-10 | 135 | 0.1 | 5.4 | 3,890 | Feb 06 | 1,900 |
| 2010-11 | 344 | 0.1 | 50.4 | 36,470 | Dec 22 | 3,770 |
| 2011-12 | 337 | 0.06 | 13.5 | 9,770 | Mar 17 | 1,720 |
| 2012-13 | 33 | 0.03 | 0.81 | 585 | Mar 08 | 502 |
| 2013-14 | 141 | 0.04 | 0.93 | 674 | Feb 28 | 1,360 |
| 2014-15 | 114 | 0.01 | 1.51 | 1,090 | Dec 12 | 2,410 |
| 2015-16 | 225 | 0 | 2.76 | 2,010 | Jan 05 | 2,060 |
| 2016-17 | 356 | 0 | 25.9 | 18,720 | Feb 17 | 3,480 |
| 2017-18 | 1 | 0.04 | 0.22 | 162 | May 21 | 1 |
| 2018-19 | 348 | 0.04 | 42.8 | 30,990 | Feb 02 | 2,060 |
| 2019-20 | 325 | 0.15 | 39 | 28,350 | Apr 06 | 2,970 |

M Data missing
* Record incomplete
E Estimate
N.D. Not determined
** Record not computed
\+ Less than 0.05 acre feet or less than 0.05 cfs, but greater than 0

# RUNOFF – STREAM GAGING STATION PEAK FLOW

**THOMPSON CREEK below Thompson Creek Dam.**
**STATION NO. F32-R**

| Season | Daily CFS | | | Total Runoff (Acre-feet) | Peak Flow | |
|---|---|---|---|---|---|---|
| | Maximum | Minimum | Mean | | Date | CFS |
| 1945-46 | N.D. | | | | | |
| 1946-47 | N.D. | | | | | |
| 1947-48 | N.D. | | | | | |
| 1948-49 | N.D. | | | | | |
| 1949-50 | N.D. | | | | | |
| 1950-51 | N.D. | | | | | |
| 1951-52 | 5 | 0 | 0 | 33 | Mar 17 | 5 |
| 1952-53 | N.D. | | | | | |
| 1953-54 | N.D. | | | | | |
| 1954-55 | N.D. | | | | | |
| 1955-56 | N.D. | | | | | |
| 1956-57 | N.D. | | | | | |
| 1957-58 | 7 | 0 | 0.3 | 219 | Apr 05 | 9 |
| 1958-59 | N.D. | | | | | |
| 1959-60 | N.D. | | | | | |
| 1960-61 | N.D. | | | | | |
| 1961-62 | N.D. | | | | | |
| 1962-63 | N.D. | | | | | |
| 1963-64 | N.D. | | | | | |
| 1964-65 | N.D. | | | | | |
| 1965-66 | N.D. | | | | | |
| 1966-67 | 23 | 0 | 0.4 | 305 | Dec 06 | 130 |
| 1967-68 | N.D. | | | | | |
| 1968-69 | N.D. | | | | | |
| 1969-70 | N.D. | | | | | |
| 1970-71 | N.D. | | | | | |
| 1971-72 | N.D. | | | | | |
| 1972-73 | N.D. | | | | | |
| 1973-74 | N.D. | | | | | |
| 1974-75 | N.D. | | | | | |
| 1975-76 | N.D. | | | | | |
| 1976-77 | N.D. | | | | | |
| 1977-78 | 136 | 0 | 1.4 | 1,038 | Mar 02 | 170 |

M Data missing
* Record incomplete
E Estimate
N.D. Not determined
** Record not computed
\+ Less than 0.05 acre feet or less than 0.05 cfs, but greater than 0

# RUNOFF – STREAM GAGING STATION PEAK FLOW

**THOMPSON CREEK below Thompson Creek Dam.**
**STATION NO. F32-R**

| Season | Daily CFS | | | Total Runoff | Peak Flow | |
|---|---|---|---|---|---|---|
| | Maximum | Minimum | Mean | (Acre-feet) | Date | CFS |
| 1978-79 | 4 | 0 | 0.1 | 46 | May 04 | 8 |
| 1979-80 | 219 | 0 | 2.2 | 1,592 | Feb 17 | 333 |
| 1980-81 | N.D. | | | | | |
| 1981-82 | 4 | 0 | 0 | 18 | Feb 18 | 8 |
| 1982-83 | 77 | 0 | 0.8 | 581 | Mar 02 | 83 |
| 1983-84 | 3 | 0 | 0 | 11 | Dec 28 | 12 |
| 1984-85 | N.D. | | | | | |
| 1985-86 | 10 | 0 | 0.1 | 59 | Mar 16 | 17 |
| 1986-87 | N.D. | | | | | |
| 1987-88 | 1 | 0 | 0 | 2 | Jan 17 | 1 |
| 1988-89 | 0 | 0 | 0 | 2 | Feb 04 | 1 |
| 1989-90 | 37 | 0 | 0 | 0 | Apr 04 | 57 |
| 1990-91 | 2 | 0 | 0 | 34 | Mar 02 | 3 |
| 1991-92 | 2 | 0 | 0.1 | 67 | Feb 10 | 6 |
| 1992-93 | 55 | 0 | 1.9 | 1,323 | Feb 08 | 113 |
| 1993-94 | 4 | 0 | 0 | 8 | Nov 01 | 7 |
| 1994-95 | 26 | 0 | 0.4 | 299 | Mar 06 | 63 |
| 1995-96 | 33 | 0 | 0.6 | 456 | Feb 21 | 35 |
| 1996-97 | 11 | 0 | 0.1 | 50 | Jan 29 | 55 |
| 1997-98 | 74 | 0 | 0.7 | 522 | Feb 23 | 158 |
| 1998-99 | 0 | 0 | 0 | 14 | Jul 14 | 0 |
| 1999-00 | 0 | 0 | 0 | 19 | Apr 18 | 1 |
| 2000-01 | 1 | 0 | 0 | 4 | Jan 16 | 10 |
| 2001-02 | 1 | 0 | 0 | 24 | Nov 20 | 1 |
| 2002-03 | 14 | 0 | 1 | 71 | Mar 16 | 18 |
| 2003-04 | 38 | 0 | 0.1 | 268 | Mar 16 | 13 |
| 2004-05 | 84 | 0 | 2.3 | 1,640 | Feb 21 | 140 |
| 2005-06 | 0 | 0 | 0 | 0 | Feb 28 | 0 |
| 2006-07 | N.D. | | | | | |
| 2007-08 | 8 | 0 | 0.1 | 84 | Jan 30 | 16 |
| 2008-09 | 0 | 0 | + | 3 | Feb 18 | 1 |
| 2009-10 | 0 | 0 | 0.1 | 9 | Jan 18 | 1 |
| 2010-11 | 40 | 0 | 0.11 | 79 | Dec 22 | 75 |

M Data missing
* Record incomplete
E Estimate
N.D. Not determined
** Record not computed
\+ Less than 0.05 acre feet or less than 0.05 cfs, but greater than 0

# RUNOFF – STREAM GAGING STATION PEAK FLOW

**THOMPSON CREEK below Thompson Creek Dam.**
**STATION NO. F32-R**

| Season | Daily CFS | | | Total Runoff (Acre-feet) | Peak Flow | |
|---|---|---|---|---|---|---|
| | Maximum | Minimum | Mean | | Date | CFS |
| 2011-12 | 0 | 0 | 0 | 0 | Mar 17 | 0 |
| 2012-13 | 0 | 0 | 0 | 0 | N.D | 0 |
| 2013-14 | 0 | 0 | 0 | 0 | N.D | 0 |
| 2014-15 | 0 | 0 | 0.005 | 3 | Dec 03 | 0 |
| 2015-16 | 0 | 0 | 0.008 | 6 | Jan 06 | 1 |
| 2016-17 | 0.29 | 0 | 0.008 | 6 | Dec 23 | 1 |
| 2017-18 | 0.00 | 0 | 0 | 0 | Oct 01 | 0 |
| 2018-19 | 0.46 | 0 | 0.037 | 27 | Apr 16 | 21 |
| 2019-20 | N.D. | N.D. | N.D. | N.D. | N.D | N.D. |

M Data missing
* Record incomplete
E Estimate
N.D. Not determined
** Record not computed
+ Less than 0.05 acre feet or less than 0.05 cfs, but greater than 0

# RUNOFF – STREAM GAGING STATION PEAK FLOW

**TOPANGA CREEK above mouth of canyon.**
**STATION NO. F54C-R**

| Season | Daily CFS | | | Total Runoff (Acre-feet) | Peak Flow | |
|---|---|---|---|---|---|---|
| | Maximum | Minimum | Mean | | Date | CFS |
| 1930-31 | 186 | + | 1 | 705 | Feb 14 | 386 |
| 1931-32 | 409 | + | 4.9 | 3,590 | Feb 08 | 1,250 |
| 1932-33 | 542 | + | 3.1 | 2,240 | Jan 19 | 1,430 |
| 1933-34 | 1,590 | 0 | 8.9 | 6,420 | Dec 31 | 4,510 |
| 1934-35 | 130 | + | 1.9 | 1,360 | Jan 05 | 1,200 |
| 1935-36 | 77 | + | 2 | 1,490 | Feb 22 | 528 |
| 1936-37 | 413 | + | 9.1 | 6,620 | Mar 15 | 1,130 |
| 1937-38 | 3,270 | + | 21.2 | 15,310 | Mar 02 | 9,300E |
| 1938-39 | NO RECORD | | | | | |
| 1939-40 | 183 | + | 2.9 | 2,080 | Feb 01 | 1,280 |
| 1940-41 | 1,100.0E | + | 26.2 | 18,940 | Feb 20 | 8,700E |
| 1941-42 | 47 | + | 0.8 | 540 | Dec 28 | 385 |
| 1942-43 | 1,100.0E | + | 12 | 8,720 | Jan 22 | 2,200 |
| 1943-44 | 1,100.0E | 0.1 | 9.6 | 6,970 | Feb 22 | 5,070 |
| 1944-45 | 176 | 0.1 | 1.5 | 1,090 | Feb 02 | 964 |
| 1945-46 | 182 | + | 1.9 | 1,390 | Dec 23 | 905 |
| 1946-47 | 86 | + | 1.4 | 994 | Nov 20 | 567 |
| 1947-48 | 23 | 0 | 0.2 | 168 | Mar 24 | 276 |
| 1948-49 | 5 | + | 0.1 | 99 | Dec 26 | 63 |
| 1949-50 | 35 | + | 0.5 | 379 | Dec 18 | 275 |
| 1950-51 | 2 | + | 0.1 | 74 | Jan 11 | 21 |
| 1951-52 | 1,990 | 0 | 23.3 | 16,900 | Jan 15 | 6,050 |
| 1952-53 | 52 | + | 1 | 725 | Dec 01 | 702 |
| 1953-54 | 396 | 0 | 2.5 | 1,820 | Feb 13 | 2,090 |
| 1954-55 | 33 | + | 0.5 | 354 | Jan 18 | 151 |
| 1955-56 | 337 | + | 1.4 | 1,030 | Jan 26 | 1,540 |
| 1956-57 | 69 | + | 0.5 | 374 | Feb 23 | 655 |
| 1957-58 | 599 | + | 10.4 | 7,460 | Apr 03 | 3,950 |
| 1958-59 | 141 | + | 1.1 | 785 | Jan 06 | 1,510 |
| 1959-60 | 76 | + | 0.6 | 422 | Apr 27 | 539 |
| 1960-61 | 8 | + | 0.1 | 58 | Jan 26 | 28 |
| 1961-62 | 1,150 | + | 10.7 | 7,720 | Feb 10 | 2,790 |
| 1962-63 | 66 | + | 0.6 | 454 | Feb 09 | 569 |

M Data missing
* Record incomplete
E Estimate
N.D. Not determined
** Record not computed
\+ Less than 0.05 acre feet or less than 0.05 cfs, but greater than 0

# RUNOFF – STREAM GAGING STATION PEAK FLOW

**TOPANGA CREEK above mouth of canyon.**
**STATION NO. F54C-R**

| Season | Daily CFS | | | Total Runoff (Acre-feet) | Peak Flow | |
|---|---|---|---|---|---|---|
| | Maximum | Minimum | Mean | | Date | CFS |
| 1963-64 | 17 | + | 0.2 | 178 | Jan 21 | 196 |
| 1964-65 | 148 | + | 1.2 | 886 | Apr 09 | 716 |
| 1965-66 | 1,120 | + | 10 | 7,270 | Dec 29 | 3,500 |
| 1966-67 | 569 | 0.1 | 7 | 5,070 | Jan 24 | 2,280 |
| 1967-68 | 186 | 0.1 | 2.2 | 1,570 | Mar 08 | 567 |
| 1968-69 | 4,920 | 0.1 | 40.6 | 29,400 | Jan 25 | 12,200 |
| 1969-70 | 84 | 0 | 1.2 | 902 | Mar 04 | 844 |
| 1970-71 | 720 | + | 6.3 | 4,560 | Jan 29 | 3,020 |
| 1971-72 | 110 | 0.2 | 1.1 | 809 | Dec 27 | 588 |
| 1972-73 | 1,140 | 0.1 | 8.6 | 6,250 | Feb 11 | 3,840 |
| 1973-74 | 1,060 | 0.1 | 5.7 | 4,110 | Jan 07 | 2,060 |
| 1974-75 | 286 | 0.1 | 3 | 2,200 | Mar 06 | 1,670 |
| 1975-76 | 24 | + | 0.3 | 214 | Feb 09 | 72 |
| 1976-77 | 30 | + | 0.6 | 405 | Jan 03 | 219 |
| 1977-78 | 2,676 | 0.1 | 32.4 | 23,480 | Mar 04 | 10,127 |
| 1978-79 | 425 | 0.2 | 7.2* | 5,180 | Mar 27 | 2,490 |
| 1979-80 | 3,919 | 0.2 | 33.2 | 23,236 | Feb 16 | 20,200 |
| 1980-81 | 90 | 0.1 | 1.8 | 1,279 | Mar 02 | 219 |
| 1981-82 | 144 | 0.2 | 1.5 | 1,066 | Mar 17 | 650 |
| 1982-83 | 2,274 | 0.2 | 277 | 19,241 | Jan 27 | 10,200 |
| 1983-84 | 203 | 0.2 | 2.2 | 1,445 | Dec 25 | 2,612 |
| 1984-85 | 26 | 0.2 | 1.3 | 943 | Dec 26 | 56 |
| 1985-86 | 823 | 0.2 | 10 | 7,211 | Feb 14 | 5,135 |
| 1986-87 | * | * | * | * | | * |
| 1987-88 | * | * | * | * | | * |
| 1988-89 | 10 | 0.1 | 0.4 | 283 | Dec 21 | 32 |
| 1989-90 | * | * | * | * | | * |
| 1990-91 | Discont | Feb-90 | Restored | 10/97. | | |
| 1996-97 | 80 | 0.5 | 3 | 2,140 | Dec 09 | 229 |
| 1997-98 | 494 | 0.7 | 24.4 | 17,640 | Feb 23 | 2,470 |
| 1998-99 | 19 | 0.5 | 1.2 | 839 | Apr 11 | 93 |
| 1999-00 | 133 | 0.3 | 2.8 | 2,030 | Feb 23 | 1,050 |
| 2000-01 | 257 | 0.5 | 7.6 | 5,520 | Jan 11 | 2,820 |

M Data missing
* Record incomplete
E Estimate
N.D. Not determined
** Record not computed
+ Less than 0.05 acre feet or less than 0.05 cfs, but greater than 0

# RUNOFF – STREAM GAGING STATION PEAK FLOW

**TOPANGA CREEK above mouth of canyon.**
**STATION NO. F54C-R**

| Season | Daily CFS | | | Total Runoff (Acre-feet) | Peak Flow | |
|---|---|---|---|---|---|---|
| | Maximum | Minimum | Mean | | Date | CFS |
| 2001-02 | 35 | 0 | 1.4 | 1,049 | Nov 24 | 195 |
| 2002-03 | 552 | 0.2 | 5.4 | 3,918 | Feb 12 | 1,660 |
| 2003-04 | 649 | 0.2 | 4.4 | 3,184 | Feb 26 | 3,780 |
| 2004-05 | 2,000 | 1 | 54.9 | 39,700 | Dec 28 | 3,980 |
| 2005-06 | 86 | 1.3 | 4.1 | 2,990 | Jan 02 | 481 |
| 2006-07 | 5 | 0.4 | 1.3 | 937 | Jan 28 | 8 |
| 2007-08 | 8,810 | 0 | 149.4 | 108,444 | Jan 05 | 8,813 |
| 2008-09 | 101 | 0.2 | 1.2 | 880 | Feb 16 | 1,040 |
| 2009-10 | 344 | 0 | 3.2 | 2,320 | Feb 06 | 3,370 |
| 2010-11 | 512 | 0.38 | 5.04 | 3,650 | Mar 20 | 6,240 |
| 2011-12 | 37 | 0.31 | 0.87 | 628 | Mar 25 | 283 |
| 2012-13 | 5 | 0 | 0.76 | 552 | Dec 24 | 10 |
| 2013-14 | 87.2 | 0.08 | 0.63 | 453 | Feb 28 | 316 |
| 2014-15 | 37.4 | 0 | 0.98 | 710 | Dec 12 | 167 |
| 2015-16 | 50.6 | 0 | 0.82 | 598 | Jan 05 | 236 |
| 2016-17 | 58.9 | 0 | 3.7 | 2,680 | Dec 23 | 400 |
| 2017-18 | 0.3 | 0 | 0.1 | 73 | Mar 01 | 0 |
| 2018-19 | 210.0 | 0.01 | 1.25 | 907 | Jan 17 | 1,110 |
| 2019-20 | 35.0 | 0 | 0.45 | 325 | Apr 06 | 354 |

M Data missing
* Record incomplete
E Estimate
N.D. Not determined
** Record not computed
\+ Less than 0.05 acre feet or less than 0.05 cfs, but greater than 0

# RUNOFF – STREAM GAGING STATION PEAK FLOW

## VERDUGO WASH at Estelle Avenue.
## STATION NO. F252-R

| Season | Daily CFS | | | Total Runoff (Acre-feet) | Peak Flow | |
|---|---|---|---|---|---|---|
| | Maximum | Minimum | Mean | | Date | CFS |
| 1928-29 | 15 | 0 | * | 140* | Apr 04 | 56* |
| 1929-30 | 14 | 0 | 0.4 | 274 | May 03 | 80 |
| 1930-31 | 8 | + | 0.2 | 145 | Apr 26 | 46 |
| 1931-32 | 39 | 0.1 | 1 | 713 | Feb 09 | 145 |
| 1932-33 | 42 | 0.1 | 0.4 | 295 | Jan 19 | 391 |
| 1933-34 | NO RECORD | | | | | |
| 1934-35 | 85* | 0 | * | 620 | Jan 05 | 1,020* |
| 1935-36 | 33 | 0 | 0.6 | 463 | Mar 30 | 1,100* |
| 1936-37 | * | 0 | * | 1,560 | Dec 27 | 768 |
| 1937-38 | 1,500 | 0 | 7.5 | 5,450 | Mar 02 | 4,400E |
| 1938-39 | 78 | 0 | 2 | 1,420 | Jan 05 | 520 |
| 1939-40 | 60 | + | 2 | 1,430 | Jan 08 | 533 |
| 1940-41 | 357 | + | 10.2 | 7,370 | Feb 19 | 1,120 |
| 1941-42 | 81 | 0.8 | 3 | 2,160 | Dec 10 | 440 |
| 1942-43 | 1,020 | 0.3 | 12 | 8,690 | Jan 23 | 3,570 |
| 1943-44 | 998 | 0.2 | 7 | 5,040 | Feb 22 | 3,160 |
| 1944-45 | 181 | 0.6 | 2.8 | 2,010 | Feb 02 | 1,520 |
| 1945-46 | 135 | 0.3 | 2.7 | 1,930 | Dec 22 | 816 |
| 1946-47 | 234 | 0 | 2.7 | 1,940 | Dec 25 | 1,860 |
| 1947-48 | 41 | 0 | 0.5 | 382 | Mar 24 | 573 |
| 1948-49 | 35 | 0 | 0.6 | 433 | Dec 16 | 202 |
| 1949-50 | 69 | 0 | 0.9 | 638 | Feb 06 | 467 |
| 1950-51 | 41 | 0 | 0.5 | 383 | Jan 11 | 960 |
| 1951-52 | 422 | 0 | 7.8 | 5,630 | Jan 16 | 2,920 |
| 1952-53 | 100 | 0 | 1.3 | 968 | Nov 15 | 1,520 |
| 1953-54 | 227 | 0 | 2.7 | 1,920 | Feb 13 | 1,300 |
| 1954-55 | 134 | 0 | 2 | 1,480 | Jan 18 | 784 |
| 1955-56 | 550 | 0 | 2.5 | 1,840 | Jan 26 | 1,940 |
| 1956-57 | 184 | 0 | 1.9 | 1,400 | Feb 23 | 2,960 |
| 1957-58 | 236 | 0 | 5.2 | 3,770 | Feb 19 | 1,700 |
| 1958-59 | 232 | 0 | 2 | 1,440 | Feb 16 | 2,080 |
| 1959-60 | 56 | 0 | 1.2 | 862 | Jan 11 | 533 |

M Data missing
* Record incomplete
E Estimate
N.D. Not determined
** Record not computed
+ Less than 0.05 acre feet or less than 0.05 cfs, but greater than 0

# RUNOFF – STREAM GAGING STATION PEAK FLOW

## VERDUGO WASH at Estelle Avenue.
## STATION NO. F252-R

| Season | Daily CFS | | | Total Runoff (Acre-feet) | Peak Flow | |
|---|---|---|---|---|---|---|
| | Maximum | Minimum | Mean | | Date | CFS |
| 1960-61 | 98 | + | 0.9 | 667 | Nov 05 | 676 |
| 1961-62 | 592 | 0 | 6.8 | 4,830 | Feb 12 | 1,880 |
| 1962-63 | 370 | + | 2 | 1,460 | Feb 09 | 2,180 |
| 1963-64 | 192 | 0 | 2.1 | 1,510 | Jan 21 | 1,640 |
| 1964-65 | 249 | + | 3.8 | 2,780 | Apr 08 | 1,480 |
| 1965-66 | 1,030 | 0.1 | 12.2 | 8,830 | Dec 29 | 3,480 |
| 1966-67 | 422 | 0.5 | 10.4 | 7,530 | Jan 22 | 3,230 |
| 1967-68 | 606 | 0.2 | 9.3 | 6,730 | Mar 08 | 3,460 |
| 1968-69 | 1,850 | 1.8 | 36.1 | 26,120 | Jan 25 | 5,050 |
| 1969-70 | 261 | 2 | 8.4 | 6,090 | Feb 28 | 2,500 |
| 1970-71 | 931 | 1.8 | 10.6 | 7,690 | Nov 29 | 5,330 |
| 1971-72 | 476 | 1.2 | 14.8 | 4,570 | Dec 24 | 1,960 |
| 1972-73 | 897 | 1 | 12.8 | 9,280 | Jan 18 | 4,010 |
| 1973-74 | 671 | 1.8 | 10.2 | 7,380 | Jan 07 | 2,390 |
| 1974-75 | 373 | 0.7 | 7.7 | 5,590 | Dec 04 | 3,390 |
| 1975-76 | 180 | 0.5 | 6.4 | 4,560 | Mar 01 | 1,190 |
| 1976-77 | 210 | 0.3 | 6 | 4,318 | Jan 03 | 2,100 |
| 1977-78 | 1,700 | + | 34.2 | 24,739 | Feb 10 | 9,820 |
| 1978-79 | * | * | * | * | Mar 27 | * |
| 1979-80 | 440 | 1.2 | 18.1 | 13,000 | Feb 16 | 6,420 |
| 1980-81 | 266 | 1.5 | 12 | 8,706 | Jan 29 | 2,870 |
| 1981-82 | 333 | 1 | 12.5 | 9,083 | Apr 01 | 1,960 |
| 1982-83 | 1,260 | 2 | 37 | 26,750 | Mar 01 | 6,714 |
| 1983-84 | NO RECORD | | | | | |
| 1984-85 | 279 | 1 | 9.2 | 6,686 | Dec 19 | 2,430 |
| 1985-86 | 437 | 1.2 | 12.1 | 8,737 | Mar 08 | 1,620 |
| 1986-87 | 158 | 1.5 | 5 | 3,635 | | N.D. |
| 1987-88 | 688 | 2.3 | 19.3 | 14,042 | Feb 01 | 4,150 |
| 1988-89 | 301 | 0.3 | 9.1 | 6,262 | Dec 16 | 1,700 |
| 1989-90 | 474 | + | 5.7 | 4,120 | Feb 17 | 1,820 |
| 1990-91 | 544 | 0.2 | 11.1 | 8,017 | | N.D. |
| 1991-92 | 636 | 0 | 20.1 | 14,621 | Feb 10 | 4,110 |

M Data missing
* Record incomplete
E Estimate
N.D. Not determined
** Record not computed
+ Less than 0.05 acre feet or less than 0.05 cfs, but greater than 0

# RUNOFF – STREAM GAGING STATION PEAK FLOW

## VERDUGO WASH at Estelle Avenue.
## STATION NO. F252-R

| Season | Daily CFS | | | Total Runoff (Acre-feet) | Peak Flow | |
|---|---|---|---|---|---|---|
| | Maximum | Minimum | Mean | | Date | CFS |
| 1992-93 | 733 | 1.7 | 32.5 | 23,520 | Jun 05 | 4,320 |
| 1993-94 | 265 | 0 | 10.4 | 7,543 | Nov 30 | 2,220 |
| 1994-95 | 1,710 | 1 | 46.5 | 33,700 | Jan 10 | 4,460 |
| 1995-96 | 1,260 | 0.8 | 18.6 | 13,520 | Feb 21 | 3,460 |
| 1996-97 | 1,140 | 1.9 | 23.3 | 16,860 | Dec 22 | 3,010 |
| 1997-98 | 966 | 3.9 | 22.3 | 16,150 | Feb 07 | 5,550 |
| 1998-99 | 117 | 3.6 | 10 | 7,250 | Nov 28 | 1,390 |
| 1999-00 | 289 | 2.9 | 11.7 | 8,470 | Feb 16 | 2,700 |
| 2000-01 | 258 | 3.1 | 10.9 | 7,870 | Jan 10 | 1,040 |
| 2001-02 | 265 | 0.3 | 10.5 | 7,545 | Nov 24 | 4,328 |
| 2002-03 | 524 | 0.1 | 11.5 | 8,341 | Mar 15 | 2,960 |
| 2003-04 | 0 | 0 | 7.4 | 0 | Feb 26 | 2,840 |
| 2004-05 | 1,350 | 5.4 | 51.2 | 37,100 | Feb 21 | 4,940 |
| 2005-06 | 547 | 8.1 | 19.5 | 14,120 | Jan 02 | 3,902 |
| 2006-07 | 139 | 5.4 | 11 | 7,943 | Feb 27 | 1,001 |
| 2007-08 | 483 | 0.9 | 13.7 | 9,916 | Jan 04 | 5,700 |
| 2008-09 | 252 | + | 6.6 | 4,760 | Feb 05 | 5,080 |
| 2009-10 | 1,630 | 0 | 19.7 | 14,300 | Feb 06 | 8,030 |
| 2010-11 | 661 | 0.2 | 28.2 | 20,420 | Dec 20 | 2,300 |
| 2011-12 | 239 | 0.61 | 6.52 | 4,730 | Mar 17 | 2,320 |
| 2012-13 | 54 | 0.63 | 3.53 | 2,550 | Oct 11 | 1,650 |
| 2013-14 | 370 | 0.38 | 4.16 | 3,010 | Feb 28 | 2,190 |
| 2014-15 | 352 | 0 | 5.63 | 4,070 | Jul 19 | 1,920 |
| 2015-16 | 299 | 0.2 | 4.92 | 3,560 | Mar 06 | 2,140 |
| 2016-17 | 305 | 0.18 | 6.21 | 4,500 | Feb 17 | 1,720 |
| 2017-18 | 355 | 0.58 | 4.51 | 3,270 | Mar 15 | 1,980 |
| 2018-19 | 635 | 0.35 | 16.8 | 12,200 | Feb 02 | 5,350 |
| 2019-20 | 349 | 0 | 8.5 | 6,170 | Apr 06 | 2,710 |

M Data missing
* Record incomplete
E Estimate
N.D. Not determined
** Record not computed
\+ Less than 0.05 acre feet or less than 0.05 cfs, but greater than 0

# RUNOFF – STREAM GAGING STATION PEAK FLOW

**WALNUT CREEK above Puente Avenue.**
**STATION NO. F304-R**

| Season | Daily CFS | | | Total Runoff (Acre-feet) | Peak Flow | |
|---|---|---|---|---|---|---|
| | Maximum | Minimum | Mean | | Date | CFS |
| 1952-53 | 47 | 0 | 0.4 | 292 | Dec 01 | 713 |
| 1953-54 | 297 | 0 | 34.9 | 25,290 | Feb 13 | 1,500 |
| 1954-55 | 337 | 0 | 29.9 | 21,640 | Jan 18 | 732 |
| 1955-56 | 1,120 | 0 | 68.5 | 49,730 | Jan 26 | 3,450 |
| 1956-57 | 361 | 0 | 71.2 | 51,530 | Feb 28 | 2,200 |
| 1957-58 | 494 | 0 | 11.7 | 8,490 | Apr 07 | 2,510 |
| 1958-59 | 279 | 0 | 2.2 | 1,610 | Jan 06 | 2,480 |
| 1959-60 | 163 | 0 | 1.8 | 1,300 | Jan 12 | 1,160 |
| 1960-61 | 272 | 0 | 12.4 | 9,010 | Jan 26 | 411 |
| 1961-62 | 431 | * | * | 4,800 | Feb 11 | 2,090 |
| 1962-63 | 267 | + | 4.6 | 3,360 | Mar 16 | 1,410 |
| 1963-64 | 232 | + | 3.9 | 2,860 | Jan 22 | 1,280 |
| 1964-65 | 435 | 0.2 | 16.1 | 11,640 | Apr 09 | 3,250 |
| 1965-66 | 646 | 0.2 | 11 | 7,920 | Dec 29 | 2,060 |
| 1966-67 | 685 | 0.1 | 20.8 | 15,060 | Jan 24 | 3,360 |
| 1967-68 | 647 | + | 23.3 | 16,880 | Mar 08 | 3,390 |
| 1968-69 | 1,830 | + | 68.4 | 49,490 | Feb 25 | 4,960 |
| 1969-70 | 278 | + | 4.5 | 3,250 | Mar 01 | 2,210 |
| 1970-71 | 384 | 0 | 9.4 | 6,810 | Dec 21 | 1,630 |
| 1971-72 | 546 | 0 | 4.1 | 3,070 | Dec 24 | 2,650 |
| 1972-73 | 591 | 0 | 9.5 | 6,920 | Jan 16 | 2,730 |
| 1973-74 | 749 | 0.1 | 9.2 | 6,670 | Jan 07 | 2,020 |
| 1974-75 | 551 | + | 7.1 | 5,170 | Dec 04 | 4,200 |
| 1975-76 | 255 | + | 3.9 | 2,800 | Sep 10 | 1,200 |
| 1976-77 | 295 | 0 | 5.4 | 3,939 | May 09 | 1,920 |
| 1977-78 | 1,970 | 0 | 65 | 47,085 | Mar 04 | 7,820 |
| 1978-79 | 714 | 0 | 17.4 | 12,619 | Mar 27 | 3,020 |
| 1979-80 | 2,490 | 0 | 54.5 | 38,432 | Feb 16 | 6,280 |
| 1980-81 | 468 | 0 | 4.7 | 3,406 | Mar 01 | 1,840 |
| 1981-82 | 724 | 0 | 11.1 | 8,030 | Mar 14 | 2,800 |
| 1982-83 | 1,570 | 0 | 45.2 | 32,750 | Feb 27 | 5,850 |
| 1983-84 | 424 | 0 | 5.7 | 4,138 | Oct 01 | 2,340 |
| 1984-85 | 276 | 0 | 8.2 | 5,917 | Nov 13 | 2,230 |

M Data missing
* Record incomplete
E Estimate
N.D. Not determined
** Record not computed
+ Less than 0.05 acre feet or less than 0.05 cfs, but greater than 0

# RUNOFF – STREAM GAGING STATION PEAK FLOW

**WALNUT CREEK above Puente Avenue.**
**STATION NO. F304-R**

| Season | Daily CFS | | | Total Runoff (Acre-feet) | Peak Flow | |
|---|---|---|---|---|---|---|
| | Maximum | Minimum | Mean | | Date | CFS |
| 1985-86 | 532 | 0 | 13.2 | 9,537 | Mar 08 | 3,580 |
| 1986-87 | 693 | 0 | 5.4 | 3,976 | Oct 02 | 2,653 |
| 1987-88 | 454 | 0 | 7.3 | 5,355 | Oct 22 | 3,288 |
| 1988-89 | 157 | 0 | 2.3 | 1,626 | Mar 25 | 869 |
| 1989-90 | 44 | 0 | 2.9 | 2,066 | May 28 | 2,006 |
| 1990-91 | 724 | + | 11.1 | 7,924 | Mar 26 | 3,386 |
| 1991-92 | 1,090 | 0 | 28.1 | 20,383 | Feb 12 | 6,400 |
| 1992-93 | 1,470 | 0 | 68.9 | 49,850 | Jan 07 | 5,700 |
| 1993-94 | 249 | 0 | 6.6 | 4,807 | Apr 26 | 2,690 |
| 1994-95 | 900 | 0 | 24.8 | 17,970 | Jan 10 | 5,040 |
| 1995-96 | 1,200 | 0 | 17 | 12,338 | Jan 31 | 5,400 |
| 1996-97 | 453 | + | 12.9 | 9,360 | Jan 26 | 2,810 |
| 1997-98 | 1,310 | + | 39 | 28,250 | Feb 07 | 5,670 |
| 1998-99 | 159 | 0 | 6.3 | 4,590 | Nov 28 | 1,400 |
| 1999-00 | 381 | 0 | 11 | 8,010 | Feb 23 | 3,130 |
| 2000-01 | 620 | 0 | 12.1 | 8,760 | Jan 11 | 2,430 |
| 2001-02 | 320 | 0 | 2.8 | 2,001 | Nov 24 | 5,196 |
| 2002-03 | 810 | 0.1 | 15 | 10,841 | Mar 15 | 3,990 |
| 2003-04 | 568 | 0.2 | 8.3 | 6,007 | Feb 25 | 2,350 |
| 2004-05 | 1,370 | 0.2 | 58.9 | 42,600 | Oct 20 | 4,720 |
| 2005-06 | 391 | 1.1 | 19.4 | 14,070 | Jan 02 | 2,867 |
| 2006-07 | 198 | 0 | 13.7 | 9,924 | Apr 20 | 1,921 |
| 2007-08 | 536 | 0 | 15.3 | 11,071 | Jan 05 | 3,964 |
| 2008-09 | 418 | 0 | 10.4 | 7,530 | Feb 05 | 4,580 |
| 2009-10 | 797 | + | 19 | 13,740 | Jan 20 | 4,160 |
| 2010-11 | 1,550 | + | 23.7 | 17,190 | Dec 22 | 4,600 |
| 2011-12 | 226 | 0 | 3.63 | 2,630 | Oct 05 | 1,630 |
| 2012-13 | 115 | 0.01 | 2.73 | 1,970 | Mar 08 | 926 |
| 2013-14 | 432 | 0 | 2.63 | 1,900 | Feb 28 | 2,430 |
| 2014-15 | 234 | 0.02 | 3.88 | 2,810 | Jul 19 | 3,030 |
| 2015-16 | 258 | 0.02 | 3.91 | 2,840 | Mar 07 | 2,170 |
| 2016-17 | 915 | 0 | 17 | 12,290 | Jan 22 | 3,560 |
| 2017-18 | 456 | 0.03 | 2.93 | 2,120 | Jan 09 | 2,550 |

M Data missing
* Record incomplete
E Estimate
N.D. Not determined
** Record not computed
\+ Less than 0.05 acre feet or less than 0.05 cfs, but greater than 0

# RUNOFF – STREAM GAGING STATION PEAK FLOW

**WALNUT CREEK above Puente Avenue.**
**STATION NO. F304-R**

| Season | Daily CFS | | | Total Runoff (Acre-feet) | Peak Flow | |
|---|---|---|---|---|---|---|
| | Maximum | Minimum | Mean | | Date | CFS |
| 2018-19 | 1090 | 0.05 | 17.5 | 12,690 | Feb 14 | 3,100 |
| 2019-20 | 556 | 0.12 | 10.2 | 7,410 | Mar 12 | 2,440 |

M Data missing
* Record incomplete
E Estimate
N.D. Not determined
** Record not computed
+ Less than 0.05 acre feet or less than 0.05 cfs, but greater than 0

# RUNOFF – STREAM GAGING STATION PEAK FLOW

**WALNUT CREEK below Puddingstone Dam.**
**STATION NO. F40-R**

| Season | Daily CFS | | | Total Runoff (Acre-feet) | Peak Flow | |
|---|---|---|---|---|---|---|
| | Maximum | Minimum | Mean | | Date | CFS |
| 1932-33 | 1 | 0 | 0.1 | 17 | Jan 29 | 33 |
| 1933-34 | 3 | 0 | 0.3 | 40 | Sep 17 | + |
| 1934-35 | 1 | 0 | 0.1 | 44 | Oct 17 | 4 |
| 1935-36 | 1 | 0 | 0.1 | 36 | Feb 12 | 13 |
| 1936-37 | 6 | 0 | 0.4 | 197 | Feb 06 | 18 |
| 1937-38 | 99 | 0.1 | 6.6 | 4,820 | Mar 07 | 104 |
| 1938-39 | 23 | 0.1 | 1.8 | 1,337 | Oct 30 | 25 |
| 1939-40 | 1 | 0.1 | 0.2 | 145 | Jan 07 | 7 |
| 1940-41 | 16 | 0.1 | 2.5 | 1,790 | Feb 19 | 25 |
| 1941-42 | 44 | 0.1 | 2.3 | 1,641 | Dec 03 | 91 |
| 1942-43 | 141 | 0.1 | 4.2 | 3,063 | Mar 04 | 287 |
| 1943-44 | 51 | 0.1 | 1.5 | 1,120 | Mar 02 | 51 |
| 1944-45 | 6 | 0.1 | 0.6 | 393 | Feb 02 | 10 |
| 1945-46 | 30 | 0.1 | 3.9 | 2,834 | Aug 31 | 37 |
| 1946-47 | 4 | 0.1 | 0.2 | 129 | Nov 12 | 6 |
| 1947-48 | 1 | 0 | 0.1 | 32 | Jul 13 | 7 |
| 1948-49 | 1 | 0 | 0.1 | 21 | Jul 22 | 3 |
| 1949-50 | 2 | 0 | 0 | 28 | Dec 18 | 4 |
| 1950-51 | 0 | 0 | 0 | 11 | Dec 14 | 3 |
| 1951-52 | 3 | 0 | 0.1 | 108 | Jan 16 | 12 |
| 1952-53 | 3 | 0 | 0.2 | 136 | Apr 20 | 4 |
| 1953-54 | 362 | 0 | 42.2 | 30,645 | Sep 23 | 392 |
| 1954-55 | 366 | 0 | 32.4 | 23,299 | Dec 12 | 404 |
| 1955-56 | 396 | 0.1 | 70.1 | 50,798 | Sep 30 | 389 |
| 1956-57 | 381 | 0.1 | 74.2 | 53,783 | Apr 26 | 414 |
| 1957-58 | 5 | 0 | 0.4 | 314 | Apr 07 | 16 |
| 1958-59 | 3 | 0 | 0.1 | 60 | Jan 06 | 11 |
| 1959-60 | 1 | 0 | 0.1 | 42 | Jan 12 | 3 |
| 1960-61 | 291 | 0 | 13 | 9,456 | Nov 16 | 294 |
| 1961-62 | 2 | 0 | 0.1 | 49 | | |
| 1962-63 | 21 | 0 | 0.7 | 482 | Nov 28 | 21 |
| 1963-64 | 0 | 0 | 0 | 20 | Feb 19 | 8 |
| 1964-65 | 309 | 0 | 10.4 | 7,431 | Mar 20 | 310 |

M Data missing
* Record incomplete
E Estimate
N.D. Not determined
** Record not computed
\+ Less than 0.05 acre feet or less than 0.05 cfs, but greater than 0

# RUNOFF – STREAM GAGING STATION PEAK FLOW

**WALNUT CREEK below Puddingstone Dam.**
**STATION NO. F40-R**

| Season | Daily CFS | | | Total Runoff (Acre-feet) | Peak Flow | |
|---|---|---|---|---|---|---|
| | Maximum | Minimum | Mean | | Date | CFS |
| 1965-66 | 110 | 0 | 4.2 | 3,120 | Dec 13 | 112 |
| 1966-67 | 157 | 0 | 13.9 | 10,036 | May 05 | 159 |
| 1967-68 | N.D. | | | | | |
| 1968-69 | N.D. | | | | | |
| 1969-70 | N.D. | | | | | |
| 1970-71 | N.D. | | | | | |
| 1971-72 | N.D. | | | | | |
| 1972-73 | N.D. | | | | | |
| 1973-74 | N.D. | | | | | |
| 1974-75 | 94 | 0 | 0 | 0 | Apr 11 | 450 |
| 1975-76 | 2 | 0 | 0 | 65 | May 24 | 20 |
| 1976-77 | 15 | 0 | 0.3 | 214 | May 18 | 31 |
| 1977-78 | 1,080 | 0 | 34.4 | 24,888 | Mar 06 | 1,115 |
| 1978-79 | 38 | 0.2 | 5.7 | 4,121 | Mar 09 | 80 |
| 1979-80 | 1,070 | 0.2 | 28.1 | 20,376 | Feb 18 | 1,070 |
| 1980-81 | 32 | 0.1 | 0.7 | 515 | Mar 01 | 34 |
| 1981-82 | 474 | 0.1 | 3.6 | 2,591 | Mar 18 | 573 |
| 1982-83 | 550 | 0.1 | 21 | 15,239 | Mar 01 | 622 |
| 1983-84 | 64 | 0.1 | 2.8 | 2,049 | Feb 04 | 255 |
| 1984-85 | 205 | 0.1 | 1.2 | 874 | Jan 13 | 216 |
| 1985-86 | 219 | 0.1 | 4.4 | 3,151 | Mar 16 | 298 |
| 1986-87 | 151 | 0 | 2.6 | 1,113 | Jan 14 | 159 |
| 1987-88 | 107 | 0.1 | 2.8 | 2,049 | | 107 |
| 1988-89 | 44 | 0.1 | 2.5 | 1,842 | Feb 10 | 48 |
| 1989-90 | 84 | 0.1 | 1.3 | 891 | Feb 21 | 161 |
| 1990-91 | 361 | 0.1 | 3.8 | 2,775 | Mar 27 | 700 |
| 1991-92 | 492 | 0.1 | 5.3 | 3,829 | Feb 12 | 580 |
| 1992-93 | 608 | 0.1 | 39 | 28,252 | Feb 19 | 863 |
| 1993-94 | 42 | 0.1 | 1.6 | 1,137 | Dec 16 | 43 |
| 1994-95 | 779 | 0.1 | 13.7 | 9,926 | Mar 06 | 834 |
| 1995-96 | 290 | 0.2 | 4.5 | 3,255 | Feb 20 | 652 |
| 1996-97 | 105 | 0.3 | 5.5 | 3,957 | Dec 30 | 114 |
| 1997-98 | 312 | 0.3 | 18.9 | 13,657 | May 28 | 818 |

M Data missing
* Record incomplete
E Estimate
N.D. Not determined
** Record not computed
\+ Less than 0.05 acre feet or less than 0.05 cfs, but greater than 0

# RUNOFF – STREAM GAGING STATION PEAK FLOW

**WALNUT CREEK below Puddingstone Dam.**
**STATION NO. F40-R**

| Season | Daily CFS | | | Total Runoff (Acre-feet) | Peak Flow | |
|---|---|---|---|---|---|---|
| | Maximum | Minimum | Mean | | Date | CFS |
| 1998-99 | 36 | 0.2 | 1.3 | 964 | Oct 01 | 126 |
| 1999-00 | 131 | 0.3 | 2.5 | 1,809 | Feb 22 | 230 |
| 2000-01 | 202 | 0.2 | 4 | 2,930 | Mar 03 | 569 |
| 2001-02 | 20 | 0.4 | 0.9 | 646 | Jan 04 | 22 |
| 2002-03 | 275 | 0.3 | 4.9 | 3,563 | Mar 16 | 292 |
| 2003-04 | 57 | 0.6 | 2.1 | 1,550 | Dec 01 | 83 |
| 2004-05 | 792 | 0 | 24.8 | 17,900 | Jan 11 | 1,010 |
| 2005-06 | 109 | 0.4 | 3.8 | 2,780 | Apr 06 | 112 |
| 2006-07 | 1 | 0 | 0.6 | 367 | Apr 25 | 32 |
| 2007-08 | 158 | 0 | 5.2 | 3,749 | Jan 28 | 235 |
| 2008-09 | 299 | 0 | 2.8 | 2,000 | Feb 07 | 365 |
| 2009-10 | 191 | 0 | 4.2 | 3,030 | Feb 08 | 202 |
| 2010-11 | 937 | 0 | 13.2 | 9,540 | Dec 22 | 970 |
| 2011-12 | 62 | 0 | 0.84 | 613 | Oct 25 | 894 |
| 2012-13 | 5 | 0 | 0.048 | 35 | Oct 23 | 786 |
| 2013-14 | 5 | 0 | 0.082 | 59 | Oct 29 | 473 |
| 2014-15 | 2 | 0 | 0.054 | 39 | Nov 06 | 255 |
| 2015-16 | 20 | 0 | 0.35 | 257 | Oct 28 | 48 |
| 2016-17 | 313 | 0.27 | 6.91 | 5,000 | Feb 16 | 685 |
| 2017-18 | 36 | 0.2 | 0.75 | 541 | Oct 11 | 498 |
| 2018-19 | 444 | 0.25 | 6.67 | 4,790 | Apr 16 | 633 |
| 2019-20 | 141 | 0 | 3.1 | 2,250 | Apr 21 | 396 |

M Data missing
* Record incomplete
E Estimate
N.D. Not determined
** Record not computed
\+ Less than 0.05 acre feet or less than 0.05 cfs, but greater than 0

# APPENDIX E

## HYDROLOGIC REPORT 2019 – 2020

**RESERVOIRS - YEARLY RESERVOIR OPERATION SUMMARY**

## RESERVOIRS - YEARLY RESERVOIR OPERATION SUMMARY

### Big Dalton Dam

| Season | Inflow Annual (AF) | Daily Mean Inflow | | Outflow Annual (AF) | Peak Inflow | |
|---|---|---|---|---|---|---|
| | | Max-Day (CFS) | Min-Day (CFS) | | Date | Q (CFS) |
| 1929-30 | 52 | 3 | 0 | 52 | | N.D. |
| 1930-31 | 41 | 2 | 0 | 41 | Apr 26 | 3 |
| 1931-32 | 690 | 54 | 0 | 688 | Feb 09 | 86 |
| 1932-33 | 79 | 5 | 0 | 81 | Jan 20 | 12 |
| 1933-34 | 448 | 93 | 0 | 448 | Jan 01 | 227 |
| 1934-35 | 593 | 21 | 0 | 575 | Apr 08 | 49 |
| 1935-36 | 360 | 12 | 0 | 370 | Feb 11 | 72 |
| 1936-37 | 1,879 | 51 | 0 | 1,868 | Feb 06 | 98 |
| 1937-38 | 3,271 | 415 | 0 | 3,192 | Mar 02 | 1,320 |
| 1938-39 | 280 | 4 | 0 | 288 | Jan 05 | 26 |
| 1939-40 | 232 | 4 | 0 | 236 | Jan 08 | 29 |
| 1940-41 | 2,767 | 56 | + | 2,748 | Mar 04 | 88 |
| 1941-42 | 209 | 2 | 0 | 233 | Mar 14 | 6 |
| 1942-43 | 3,143 | 160 | 0 | 3,110 | Jan 23 | 595 |
| 1943-44 | 1,087 | 109 | + | 1,085 | Feb 22 | 226 |
| 1944-45 | 734 | 19 | 0 | 729 | Nov 11 | 47 |
| 1945-46 | 525 | 40 | 0 | 509 | Dec 23 | 148 |
| 1946-47 | 492 | 16 | 0 | 512 | Nov 20 | 56 |
| 1947-48 | 58 | 1 | 0 | 8 | Apr 28 | 10 |
| 1948-49 | 94 | 1 | 0 | 113 | Dec 17 | 3 |
| 1949-50 | 142 | 2 | 0 | 130 | Feb 06 | 4 |
| 1950-51 | 27 | 2 | + | 14 | Jan 11 | 5 |
| 1951-52 | 1,626 | 73 | 0 | 1,577 | Jan 16 | 154 |
| 1952-53 | 120 | 1 | + | 68 | Dec 01 | 5 |
| 1953-54 | 346 | 13 | 0 | 359 | Jan 25 | 53 |
| 1954-55 | 87 | 1 | + | 5 | Jan 18 | 2 |
| 1955-56 | 190 | 14 | + | 213 | Jan 26 | 56 |
| 1956-57 | 76 | 1 | + | 27 | Jan 13 | 2 |
| 1957-58 | 2,104 | 97 | 0 | 2,052 | Apr 03 | 169 |
| 1958-59 | 160 | 6 | + | 133 | Feb 16 | 26 |
| 1959-60 | 54 | 1 | + | 11 | Apr 27 | 5 |
| 1960-61 | 187 | 18 | 0 | 1,510 | Nov 05 | 462 |
| 1961-62 | 1,222 | 63 | 0 | 933 | Dec 02 | 1,130 |
| 1962-63 | 248 | 20 | 0 | 159 | Feb 09 | 92 |
| 1963-64 | 165 | 3 | 0 | 300 | Mar 22 | 30 |
| 1964-65 | 380 | 18 | 0 | 15 | Apr 09 | 73 |
| 1965-66 | 2,210 | 113 | 0 | 2,013 | Nov 22 | 489 |

N.D. Not determined

R.I. Records incomplete

\+ Less than 0.05 acre feet or less than 0.05 cfs, but greater than 0

## RESERVOIRS - YEARLY RESERVOIR OPERATION SUMMARY

### Big Dalton Dam

| Season | Inflow Annual (AF) | Daily Mean Inflow | | Outflow Annual (AF) | Peak Inflow | |
|---|---|---|---|---|---|---|
| | | Max-Day (CFS) | Min-Day (CFS) | | Date | Q (CFS) |
| 1966-67 | 4,787 | 292 | 0 | 4,790 | Dec 06 | 685 |
| 1967-68 | 771 | 15 | 0 | 681 | Nov 19 | 56 |
| 1968-69 | 13,251 | 1,210 | 0 | 12,995 | Jan 25 | 1,540 |
| 1969-70 | 728 | 15 | 0 | 610 | Feb 28 | 91 |
| 1970-71 | 856 | 22 | 0 | 1,100 | Dec 21 | 38 |
| 1971-72 | 217 | 10 | + | | Dec 27 | 11 |
| 1972-73 | 1,386 | 100 | + | 1,046 | Feb 11 | 163 |
| 1973-74 | 860 | 43 | 0 | 1,030 | Jan 07 | 68 |
| 1974-75 | 379 | 4 | 0 | 211 | Mar 06 | 8 |
| 1975-76 | 237 | 6 | 0 | 467 | Mar 01 | 17 |
| 1976-77 | 171 | 3 | 0 | 20 | Jan 03 | 14 |
| 1977-78 | 6,182 | 232 | 0 | 6,234 | Mar 04 | 500 |
| 1978-79 | R.I. | | | | | N.D. |
| 1979-80 | R.I. | | | | | N.D. |
| 1980-81 | 349 | 5 | 0 | 364 | Jan 29 | 29 |
| 1981-82 | 1,018 | 50 | 0 | 923 | Mar 17 | 53 |
| 1982-83 | 5,562 | 240 | 0 | 5,532 | Mar 01 | 350 |
| 1983-84 | 703 | 8 | 0 | 704 | Dec 25 | 16 |
| 1984-85 | 611 | 10 | 0 | 585 | Dec 19 | 16 |
| 1985-86 | 886 | 20 | 0 | 865 | Mar 16 | 26 |
| 1986-87 | 203 | N.D. | 0 | 196 | Jan 04 | N.D. |
| 1987-88 | 342 | 7 | 0 | 324 | Jan 17 | 17 |
| 1988-89 | 382 | 13 | 0 | 340 | Feb 04 | 31 |
| 1989-90 | 112 | 3 | 0 | 90 | Feb 17 | 8 |
| 1990-91 | 470 | 26 | 0 | 453 | Mar 27 | 62 |
| 1991-92 | 1,259 | 37 | 0 | 1,243 | Feb 12 | 121 |
| 1992-93 | 7,102 | 322 | 0 | 7,146 | Jan 18 | 385 |
| 1993-94 | 369 | 3 | 0 | 300 | Feb 07 | 4 |
| 1994-95 | 3,839 | 73 | 0 | 3,820 | Jan 10 | 127 |
| 1995-96 | 1,247 | 54 | 0 | 1,215 | Feb 20 | 96 |
| 1996-97 | 1,127 | 8 | 0 | 1,108 | | N.D. |
| 1997-98 | 4,703 | 213 | 0 | 4,642 | Feb 23 | 344 |
| 1998-99 | | | | | | N.D. |
| 1999-00 | 718 | 8 | 0 | 241 | Feb 23 | 72 |
| 2000-01 | 354 | 6 | 0 | 321 | Feb 13 | 8 |
| 2001-02 | 9 | 1 | 0 | 27 | Nov 24 | 3 |
| 2002-03 | 1,780 | 52 | 0 | 566 | Apr 14 | 168 |

N.D. Not determined

R.I. Records incomplete

\+ Less than 0.05 acre feet or less than 0.05 cfs, but greater than 0

## RESERVOIRS - YEARLY RESERVOIR OPERATION SUMMARY

### Big Dalton Dam

| Season | Inflow Annual (AF) | Daily Mean Inflow | | Outflow Annual (AF) | Peak Inflow | |
|---|---|---|---|---|---|---|
| | | Max-Day (CFS) | Min-Day (CFS) | | Date | Q (CFS) |
| 2003-04 | 502 | 25 | 0 | 626 | Feb 26 | 110 |
| 2004-05 | 8,060 | 494 | 0 | 7,350 | Jan 09 | 935 |
| 2005-06 | 1,670 | 60 | 0 | 1,380 | Apr 05 | 92 |
| 2006-07 | 648 | 9 | 0 | 823 | Mar 23 | 13 |
| 2007-08 | 705 | 40 | 0 | 496 | Jan 28 | 79 |
| 2008-09 | 594 | 7 | 0 | 601 | Feb 07 | 15 |
| 2009-10 | 744 | 9 | 0 | 418 | Feb 09 | 18 |
| 2010-11 | 2,730 | 103 | 0 | 2,050 | Dec 12 | 212 |
| 2011-12 | 514 | 3.5 | 0 | 614 | Mar 17 | 11 |
| 2012-13 | 28 | 3.5 | 0 | 191 | Nov 30 | 6 |
| 2013-14 | 53 | 2.5 | 0 | 64 | Dec 23 | 29 |
| 2014-15 | 6.7 | 1.2 | 0 | 50 | Dec 02 | 2 |
| 2015-16 | 509 | 2 | 0 | 535 | May 23 | 2 |
| 2016-17 | 997 | 55 | 0 | 889 | Jan 22 | 73 |
| 2017-18 | 6 | 1 | 0 | 141 | Jan 09 | 3 |
| 2018-19 | 1570 | 57 | 0 | 1,470 | Feb 14 | 130 |
| 2019-20 | 577 | 11 | 0 | 623 | Apr 08 | 13 |

N.D. Not determined

R.I. Records incomplete

\+ Less than 0.05 acre feet or less than 0.05 cfs, but greater than 0

## RESERVOIRS - YEARLY RESERVOIR OPERATION SUMMARY

### Big Tujunga Dam

| Season | Inflow Annual (AF) | Daily Mean Inflow | | Outflow Annual (AF) | Peak Inflow | |
|---|---|---|---|---|---|---|
| | | Max-Day (CFS) | Min-Day (CFS) | | Date | Q (CFS) |
| 1932-33 | 4,342 | 218 | 0 | 4,518 | | N.D. |
| 1933-34 | 4,441 | 994 | 0 | 4,234 | Jan 01 | 2,430 |
| 1934-35 | 11,992 | 380 | 0 | 10,698 | Apr 08 | 718 |
| 1935-36 | 3,875 | 130 | 0 | 5,508 | Feb 12 | 312 |
| 1936-37 | 26,969 | 803 | 0.6 | 25,729 | Feb 06 | 1,740 |
| 1937-38 | 64,855 | 12,030 | 1 | 65,022 | Mar 02 | 32,940 |
| 1938-39 | 9,905 | 327 | 1.2 | 9,106 | Dec 19 | 666 |
| 1939-40 | 7,058 | 337 | 0.4 | 7,197 | Jan 08 | 2,300 |
| 1940-41 | 59,402 | 1,200 | 0.9 | 59,086 | Mar 04 | 1,570 |
| 1941-42 | 7,120 | 70 | 0.8 | 7,724 | Dec 10 | 134 |
| 1942-43 | 52,877 | 5,700 | 1.1 | 52,919 | Jan 23 | 17,850 |
| 1943-44 | 42,270 | 2,780 | 5 | 41,722 | Feb 22 | 4,770 |
| 1944-45 | 13,206 | 475 | 1.2 | 12,231 | Nov 11 | 1,850 |
| 1945-46 | 11,543 | 1,150 | 0.8 | 12,383 | Mar 30 | 2,310 |
| 1946-47 | 12,987 | 674 | 0.9 | 12,827 | Nov 13 | 1,690 |
| 1947-48 | 2,679 | 44 | 0.7 | 3,579 | Apr 29 | 85 |
| 1948-49 | 2,129 | 16 | 0.1 | 1,645 | Mar 11 | 18 |
| 1949-50 | 2,029 | 32 | 0.2 | 1,905 | Feb 06 | 43 |
| 1950-51 | 841 | 8 | 0.1 | 1,235 | Apr 29 | 17 |
| 1951-52 | 27,288 | 896 | 0.3 | 26,125 | Jan 18 | 2,030 |
| 1952-53 | 3,496 | 35 | 0.1 | 4,873 | Nov 15 | 108 |
| 1953-54 | 5,389 | 212 | 0.1 | 5,290 | Jan 25 | 500 |
| 1954-55 | 2,623 | 30 | 0.2 | 2,282 | Jan 18 | 52 |
| 1955-56 | 3,026 | 233 | 0.4 | 3,433 | Jan 26 | 582 |
| 1956-57 | 1,967 | 107 | 0.1 | 1,660 | Jan 13 | 283 |
| 1957-58 | 27,558 | 1,220 | 0.1 | 27,563 | Apr 03 | 2,860 |
| 1958-59 | 3,405 | 172 | 0.1 | 3,152 | Jan 06 | 213 |
| 1959-60 | 1,183 | 12 | 0.3 | 1,653 | Jan 12 | 24 |
| 1960-61 | 838 | 14 | 0.4 | 718 | Nov 06 | 35 |
| 1961-62 | 16,711 | 2,540 | 0.4 | 16,776 | Feb 11 | 5,050 |
| 1962-63 | 1,715 | 90 | 0.2 | 1,359 | Feb 10 | 237 |
| 1963-64 | 1,526 | 40 | 0 | 2,039 | Jan 22 | 90 |
| 1964-65 | 2,429 | 60 | 0.4 | 1,503 | Apr 09 | 165 |
| 1965-66 | 30,772 | 2,810 | 0.6 | 29,779 | Dec 29 | 10,800 |
| 1966-67 | 30,158 | 1,180 | 1.6 | 30,338 | Dec 06 | 2,600 |
| 1967-68 | 10,584 | 352 | 1 | 11,446 | Nov 21 | 725 |
| 1968-69 | 107,609 | 7,800 | 0 | 106,462 | Feb 25 | 17,800 |

N.D. Not determined
R.I. Records incomplete
+ Less than 0.05 acre feet or less than 0.05 cfs, but greater than 0

## RESERVOIRS - YEARLY RESERVOIR OPERATION SUMMARY

### Big Tujunga Dam

| Season | Inflow Annual (AF) | Daily Mean Inflow | | Outflow Annual (AF) | Peak Inflow | |
|---|---|---|---|---|---|---|
| | | Max-Day (CFS) | Min-Day (CFS) | | Date | Q (CFS) |
| 1969-70 | 11,643 | 372 | 1.5 | 11,624 | Mar 01 | 613 |
| 1970-71 | 12,394 | 1,100 | 2.1 | 11,412 | Nov 29 | 3,970 |
| 1971-72 | 4,118 | 194 | 0.5 | 3,374 | Dec 24 | 462 |
| 1972-73 | 15,375 | 1,914 | 0.5 | 14,680 | Feb 11 | 6,320 |
| 1973-74 | 8,663 | 256 | 0.9 | 5,582 | Jan 07 | 561 |
| 1974-75 | 5,442 | 198 | 0.3 | 8,666 | Mar 06 | 315 |
| 1975-76 | 4,482 | 408 | 0.1 | 3,863 | Feb 09 | 1,400 |
| 1976-77 | 3,928 | 164 | 1.2 | 3,547 | Jan 03 | 878 |
| 1977-78 | R.I. | | | | | N.D. |
| 1978-79 | R.I. | | | | | N.D. |
| 1979-80 | R.I. | | | | | N.D. |
| 1980-81 | 10,927 | 226 | 3 | 11,470 | Jan 29 | 496 |
| 1981-82 | 16,578 | 569 | 3.8 | 16,557 | Mar 17 | 1,499 |
| 1982-83 | 95,294 | 7,065 | 3.8 | 93,880 | Mar 01 | 10,007 |
| 1983-84 | 10,861 | 337 | 0 | 11,314 | Dec 25 | 808 |
| 1984-85 | 7,362 | 200 | 0.7 | 6,952 | Dec 19 | 361 |
| 1985-86 | 12,370 | 529 | 0.4 | 11,757 | Jan 30 | 969 |
| 1986-87 | 2,943 | 28 | 0 | 2,843 | Jan 04 | 53 |
| 1987-88 | 7,121 | 190 | 0 | 6,902 | Feb 01 | 685 |
| 1988-89 | 4,300 | 91 | 0 | 4,208 | Feb 10 | 131 |
| 1989-90 | 929 | 41 | 0 | 741 | Feb 17 | 62 |
| 1990-91 | 8,074 | 530 | 0 | 7,992 | Mar 01 | 1,871 |
| 1991-92 | 31,767 | 1,249 | 0.1 | 31,414 | Feb 12 | 5,167 |
| 1992-93 | 89,492 | 3,490 | 0.2 | 89,311 | Feb 19 | 7,774 |
| 1993-94 | 8,635 | 80 | 0 | 9,241 | Feb 08 | 170 |
| 1994-95 | 34,562 | 1,005 | 0.2 | 34,532 | Jan 10 | 3,608 |
| 1995-96 | 8,491 | 477 | 1.1 | 7,970 | Feb 21 | 530 |
| 1996-97 | 9,025 | 156 | 0.3 | 8,080 | | N.D. |
| 1997-98 | 48,676 | 3,370 | 0.4 | 48,281 | Feb 23 | 8,288 |
| 1998-99 | 7,460 | 39 | 0 | 5,580 | Feb 02 | 72 |
| 1999-00 | 5,840 | 166 | 0 | 5,390 | Feb 21 | 602 |
| 2000-01 | 7,360 | 219 | 0 | 7,020 | Mar 06 | 343 |
| 2001-02 | 1,190 | 11 | 0 | 934 | Oct 23 | 35 |
| 2002-03 | 7,710 | 567 | 0 | 7,070 | Feb 12 | 1,803 |
| 2003-04 | 2,630 | 335 | 0 | 2,120 | Feb 26 | 932 |
| 2004-05 | 132,800 | 4,910 | + | 132,000 | Jan 09 | 7,960 |
| 2005-06 | 13,910 | 467 | 0 | 13,790 | Jan 02 | 1,040 |

N.D. Not determined
R.I. Records incomplete
+ Less than 0.05 acre feet or less than 0.05 cfs, but greater than 0

## RESERVOIRS - YEARLY RESERVOIR OPERATION SUMMARY

### Big Tujunga Dam

| Season | Inflow Annual (AF) | Daily Mean Inflow | | Outflow Annual (AF) | Peak Inflow | |
|---|---|---|---|---|---|---|
| | | Max-Day (CFS) | Min-Day (CFS) | | Date | Q (CFS) |
| 2006-07 | 3,590 | 35 | 0 | 2,770 | May 08 | 79 |
| 2007-08 | 13,280 | 899 | 0 | 13,220 | Jan 27 | 1,760 |
| 2008-09 | N.D. | No data due to rehabilitation project | | | | |
| 2009-10 | N.D. | No data due to rehabilitation project | | | | |
| 2010-11 | N.D. | No data due to rehabilitation project | | | | |
| 2011-12 | N.D. | No data due to rehabilitation project | | | | |
| 2012-13 | 3,510 | 22 | 0 | 2,950 | May 07 | 35 |
| 2013-14 | 3,270 | 298 | 0.2 | 2,350 | Mar 01 | 725 |
| 2014-15 | 6,600 | 84 | 1.8 | 1,400 | Jul 19 | 640 |
| 2015-16 | 2,770 | 66 | 1.0 | 1,590 | Jan 31 | 219 |
| 2016-17 | 13,500 | 507 | 1.0 | 12,960 | Feb 17 | 2,120 |
| 2017-18 | 2,340 | 42 | 0.2 | 1,410 | Mar 22 | 68 |
| 2018-19 | 27,880 | 802 | 0.6 | 26,880 | Feb 14 | 2,560 |
| 2019-20 | 9,040 | 200 | 0.0 | 7,300 | Apr 06 | 358 |

N.D. Not determined
R.I. Records incomplete
+ Less than 0.05 acre feet or less than 0.05 cfs, but greater than 0

## RESERVOIRS - YEARLY RESERVOIR OPERATION SUMMARY

### Cogswell Dam

| Season | Inflow Annual (AF) | Daily Mean Inflow | | Outflow Annual (AF) | Peak Inflow | |
|---|---|---|---|---|---|---|
| | | Max-Day (CFS) | Min-Day (CFS) | | Date | Q (CFS) |
| 1934-35 | 3,517 | 54 | 0.1 | 3,517 | | N.D. |
| 1935-36 | 7,154 | 265 | 0 | 7,138 | | N.D. |
| 1936-37 | 32,986 | 943 | 0.1 | 32,996 | Feb 14 | 1,240 |
| 1937-38 | 60,336 | 7,990 | 1.4 | 58,799 | Mar 02 | 24,710 |
| 1938-39 | 11,560 | 673 | 0.9 | 11,369 | Sep 25 | 1,360 |
| 1939-40 | 9,634 | 309 | 0.8 | 9,569 | Jan 08 | 2,020 |
| 1940-41 | 61,270 | 1,400 | 0.5 | 59,951 | Feb 20 | 1,640 |
| 1941-42 | 6,080 | 108 | 0.3 | 7,331 | Dec 10 | 294 |
| 1942-43 | 54,700 | 2,320 | 0.7 | 53,703 | Jan 23 | 15,000 |
| 1943-44 | 38,150 | 2,860 | 1.4 | 37,460 | Feb 22 | 4,650 |
| 1944-45 | 11,887 | 424 | 1.4 | 10,385 | Nov 11 | 1,600 |
| 1945-46 | 14,711 | 1,260 | 0.8 | 16,377 | Mar 30 | 2,790 |
| 1946-47 | 20,135 | 1,030 | 0.1 | 20,135 | Dec 25 | 2,290 |
| 1947-48 | 3,103 | 86 | 0.3 | 3,032 | Apr 29 | 262 |
| 1948-49 | 2,911 | 32 | 0.3 | 2,765 | Jan 20 | 65 |
| 1949-50 | 3,778 | 99 | 0.4 | 3,536 | Dec 18 | 239 |
| 1950-51 | 887 | 10 | 0.3 | 568 | Apr 29 | 24 |
| 1951-52 | 33,783 | 1,260 | 0.3 | 25,439 | Jan 16 | 2,640 |
| 1952-53 | 4,410 | 70 | 0.8 | 12,345 | Dec 01 | 254 |
| 1953-54 | 8,004 | 412 | 0.3 | 7,500 | Jan 24 | 1,030 |
| 1954-55 | 3,941 | 51 | 0.3 | 3,165 | Apr 30 | 176 |
| 1955-56 | 4,070 | 419 | 0.1 | 3,564 | Jan 26 | 1,040 |
| 1956-57 | 3,421 | 225 | 0.2 | 3,757 | Jan 13 | 685 |
| 1957-58 | 36,476 | 1,460 | 0 | 34,530 | Apr 03 | 3,710 |
| 1958-59 | 4,904 | 340 | 0.4 | 6,205 | Jan 06 | 1,760 |
| 1959-60 | 1,935 | 27 | 0.5 | 2,006 | Jan 10 | 65 |
| 1960-61 | 1,106 | 36 | 0.4 | 572 | Jan 26 | 116 |
| 1961-62 | 25,497 | 3,480 | 0.3 | 23,255 | Feb 11 | 7,010 |
| 1962-63 | 3,220 | 153 | 0.6 | 4,783 | Feb 09 | 1,017 |
| 1963-64 | 2,587 | 89 | 0.4 | 2,647 | Apr 01 | 276 |
| 1964-65 | 5,037 | 266 | 0.3 | 4,159 | Apr 09 | 479 |
| 1965-66 | 41,747 | 2,640 | 0.3 | 42,170 | Dec 29 | 9,220 |
| 1966-67 | 40,504 | 1,860 | 0.6 | 32,757 | Dec 06 | 4,650 |
| 1967-68 | 9,569 | 338 | 0.6 | 12,713 | Nov 19 | 893 |
| 1968-69 | 95,676 | 6,380 | 0.1 | 90,488 | Jan 25 | 15,700 |
| 1969-70 | 10,222 | 410 | 1 | 13,859 | Feb 28 | 1,020 |
| 1970-71 | 10,822 | 1,030 | 0.8 | 11,683 | Nov 29 | 2,930 |

N.D. Not determined

R.I. Records incomplete

\+ Less than 0.05 acre feet or less than 0.05 cfs, but greater than 0

## RESERVOIRS - YEARLY RESERVOIR OPERATION SUMMARY

# Cogswell Dam

| Season | Inflow Annual (AF) | Daily Mean Inflow | | Outflow Annual (AF) | Peak Inflow | |
|---|---|---|---|---|---|---|
| | | Max-Day (CFS) | Min-Day (CFS) | | Date | Q (CFS) |
| 1971-72 | 4,009 | 297 | 0.4 | 4,557 | Dec 24 | 798 |
| 1972-73 | 19,613 | 2,210 | 0.4 | 16,632 | Feb 11 | 6,970 |
| 1973-74 | 12,746 | 424 | 1.1 | 12,051 | Jan 07 | 880 |
| 1974-75 | 6,610 | 241 | 1.1 | 8,344 | Mar 06 | 432 |
| 1975-76 | 5,550 | 509 | 0.1 | 5,040 | Feb 09 | 824 |
| 1976-77 | 4,955 | 206 | 0.3 | 5,000 | Jan 03 | 421 |
| 1977-78 | 86,754 | 3,852 | 0 | 86,030 | Feb 10 | 11,200 |
| 1978-79 | 23,057 | 519 | 1.9 | 24,083 | Jan 05 | N.D. |
| 1979-80 | 59,867 | 3,028 | 1.8 | 57,887 | Feb 16 | 6,196 |
| 1980-81 | 5,299 | 127 | 0 | 7,752 | Jan 29 | 511 |
| 1981-82 | 14,258 | 605 | 0.4 | 9,059 | Mar 17 | 1,238 |
| 1982-83 | 77,775 | 3,966 | 1.4 | 78,446 | Mar 02 | 5,898 |
| 1983-84 | 9,561 | 272 | 2.8 | 12,495 | Dec 25 | 790 |
| 1984-85 | 7,167 | 284 | 0 | 6,383 | Dec 19 | 531 |
| 1985-86 | 15,584 | 560 | 0.6 | 15,314 | Feb 15 | 916 |
| 1986-87 | 2,194 | 35 | 0.1 | 2,669 | Jan 04 | 63 |
| 1987-88 | 11,621 | 282 | 0 | 10,919 | Mar 01 | 528 |
| 1988-89 | 4,953 | 99 | 0 | 5,105 | Feb 04 | 175 |
| 1989-90 | 1,903 | 61 | 0 | 1,775 | Feb 18 | 99 |
| 1990-91 | 10,229 | 605 | 0 | 10,921 | Mar 01 | 1,063 |
| 1991-92 | 39,922 | 2,352 | 0.2 | 39,922 | Feb 11 | 5,231 |
| 1992-93 | 83,608 | 2,330 | 0 | 78,936 | Feb 19 | 4,135 |
| 1993-94 | 6,896 | 105 | 0.2 | 11,142 | Feb 08 | 162 |
| 1994-95 | 41,056 | 1,002 | 0.1 | 41,072 | Jan 10 | 2,479 |
| 1995-96 | 8,780 | 496 | 0.1 | 8,777 | Feb 20 | 1,056 |
| 1996-97 | 9,428 | 192 | 0.2 | 8,089 | | N.D. |
| 1997-98 | 47,709 | 3,476 | 0.5 | 41,403 | Feb 23 | 7,343 |
| 1998-99 | | | | | | N.D. |
| 1999-00 | 8,210 | 274 | 0 | 5,370 | Feb 21 | 562 |
| 2000-01 | 10,760 | 316 | 0 | 10,420 | Feb 13 | 780 |
| 2001-02 | 1,980 | 22 | 0 | 3,930 | Jan 27 | 34 |
| 2002-03 | 10,320 | 552 | 0.5 | 8,290 | Feb 13 | 1,399 |
| 2003-04 | 5,820 | 34 | 1 | 6,780 | Jan 14 | 81 |
| 2004-05 | 102,200 | 4,790 | 0.44 | 96,820 | Jan 09 | 6,590 |
| 2005-06 | 13,340 | 297 | 0 | 15,340 | Jan 03 | 478 |
| 2006-07 | 1,190 | 11 | 0 | 2,660 | Feb 27 | 14 |
| 2007-08 | 16,830 | 1,100 | 0.3 | 13,530 | Jan 27 | 2,150 |

N.D. Not determined

R.I. Records incomplete

\+ Less than 0.05 acre feet or less than 0.05 cfs, but greater than 0

## RESERVOIRS - YEARLY RESERVOIR OPERATION SUMMARY

### Cogswell Dam

| Season | Inflow Annual (AF) | Daily Mean Inflow | | Outflow Annual (AF) | Peak Inflow | |
|---|---|---|---|---|---|---|
| | | Max-Day (CFS) | Min-Day (CFS) | | Date | Q (CFS) |
| 2008-09 | 6,480 | 156 | 1 | 6,230 | Feb 07 | 342 |
| 2009-10 | 36,210 | 1,390 | 0 | 27,930 | Jan 18 | 7,790 |
| 2010-11 | 43,790 | 1,250 | 0 | 39,480 | Dec 20 | 4,480 |
| 2011-12 | 7,960 | 100 | 0 | 10,190 | Mar 26 | 822 |
| 2012-13 | 2,860 | 22 | 0 | 1,770 | Jan 24 | 49 |
| 2013-14 | 1,730 | 202 | 0 | 813 | Mar 01 | 487 |
| 2014-15 | 3,130 | 116 | 0 | 1,230 | Jul 19 | 292 |
| 2015-16 | 3,580 | 106 | 0.4 | 2,080 | Jan 31 | 436 |
| 2016-17 | 13,940 | 569 | 0.0 | 10,500 | Feb 17 | 2,930 |
| 2017-18 | 3,490 | 72 | 0.6 | 3,780 | Mar 22 | 133 |
| 2018-19 | 23,350 | 912 | 0.1 | 18,730 | Feb 14 | 2,810 |
| 2019-20 | 12440 R.I. | 289 | 0.0 | 9,670 R.I. | Apr 06 | 771 |

Missing outflow data, 2/12-2/22/20. However reservoir WSE was stable during that period.

N.D. Not determined

R.I. Records incomplete

\+ Less than 0.05 acre feet or less than 0.05 cfs, but greater than 0

## RESERVOIRS - YEARLY RESERVOIR OPERATION SUMMARY

# Devil's Gate Dam

| Season | Inflow Annual (AF) | Daily Mean Inflow | | Outflow Annual (AF) | Peak Inflow | |
|---|---|---|---|---|---|---|
| | | Max-Day (CFS) | Min-Day (CFS) | | Date | Q (CFS) |
| 1933-34 | 2,938 | 757 | 0 | 0 | Jan 01 | 3,310 |
| 1934-35 | 3,843 | N.D. | 0 | N.D. | Oct 17 | 1,310 |
| 1935-36 | 3,457 | N.D. | 0 | 86 | Feb 02 | 939 |
| 1936-37 | 12,030 | 340 | 0 | 2,818 | Feb 06 | 852 |
| 1937-38 | 25,436 | 3,720 | 0 | 17,496 | Mar 02 | 10,840 |
| 1938-39 | 3,044 | 200 | 0 | 634 | Dec 19 | 201 |
| 1939-40 | 1,350 | 142 | 0 | 745 | Jan 08 | 859 |
| 1940-41 | 27,013 | 1,380 | 0 | 24,582 | Feb 20 | 3,870 |
| 1941-42 | 689 | 91 | 0 | 443 | Dec 10 | 479 |
| 1942-43 | 25,655 | 2,560 | 0 | 23,552 | Jan 23 | 7,740 |
| 1943-44 | 8,680 | 1,450 | 0 | 7,905 | Feb 22 | 2,310 |
| 1944-45 | 2,341 | 288 | 0 | 2,031 | Nov 11 | 949 |
| 1945-46 | 2,994 | 435 | 0 | 1,343 | Dec 22 | 1,040 |
| 1946-47 | 4,045 | 285 | 0 | 3,949 | Dec 25 | 1,280 |
| 1947-48 | 260 | 32 | 0 | 57 | Mar 24 | 444 |
| 1948-49 | 185 | 14 | 0 | 37 | Mar 10 | 59 |
| 1949-50 | 318 | 37 | 0 | 81 | Feb 06 | 237 |
| 1950-51 | 171 | 18 | 0 | 17 | Jan 11 | 468 |
| 1951-52 | 11,508 | 792 | 0 | 11,377 | Jan 16 | 2,650 |
| 1952-53 | 563 | 51 | 0 | 194 | Nov 15 | 823 |
| 1953-54 | 1,324 | 178 | 0 | 488 | Jan 25 | 565 |
| 1954-55 | 651 | 50 | 0 | 154 | Jan 18 | 334 |
| 1955-56 | 2,229 | 591 | 0 | 1,339 | Jan 26 | 1,420 |
| 1956-57 | 926 | 111 | 0 | 142 | Feb 23 | 795 |
| 1957-58 | 9,642 | 447 | 0 | 6,508 | Apr 03 | 1,020 |
| 1958-59 | 1,055 | 160 | 0 | 465 | Jan 06 | 1,280 |
| 1959-60 | 1,052 | 40 | 0 | 131 | Jan 11 | 329 |
| 1960-61 | 1,035 | 131 | 0 | 488 | Nov 06 | 1,260 |
| 1961-62 | 7,014 | 970 | 0 | 5,260 | Feb 11 | 1,840 |
| 1962-63 | 1,215 | 289 | 0 | 251 | Feb 09 | 1,290 |
| 1963-64 | 860 | 81 | 0 | 170 | Jan 21 | 727 |
| 1964-65 | 1,721 | 170 | 0 | 246 | Apr 09 | 755 |
| 1965-66 | 15,667 | 1,340 | 0 | 13,199 | Nov 22 | 3,740 |
| 1966-67 | 16,391 | 934 | 0 | 6,057 | Dec 06 | 2,130 |
| 1967-68 | 6,858 | 698 | 0 | 2,233 | Nov 19 | 1,310 |
| 1968-69 | 44,817 | 4,220 | 0 | 39,164 | Jan 25 | 7,910 |
| 1969-70 | 2,109 | 202 | 0 | 1,311 | Mar 04 | 534 |

N.D. Not determined

R.I. Records incomplete

\+ Less than 0.05 acre feet or less than 0.05 cfs, but greater than 0

## RESERVOIRS - YEARLY RESERVOIR OPERATION SUMMARY

### Devil's Gate Dam

| Season | Inflow Annual (AF) | Daily Mean Inflow | | Outflow Annual (AF) | Peak Inflow | |
|---|---|---|---|---|---|---|
| | | Max-Day (CFS) | Min-Day (CFS) | | Date | Q (CFS) |
| 1970-71 | 3,098 | 682 | 0 | 1,894 | Nov 29 | 1,760 |
| 1971-72 | 798 | 152 | 0 | + | Dec 24 | 433 |
| 1972-73 | 8,298 | 1,517 | 0 | 5,615 | Feb 11 | 3,520 |
| 1973-74 | 4,032 | 589 | 0 | 2,749 | Jan 07 | 1,100 |
| 1974-75 | 2,024 | 237 | 0 | 711 | Mar 06 | 451 |
| 1975-76 | 2,172 | 281 | 0 | 1,204 | Sep 10 | 869 |
| 1976-77 | 1,682 | 177 | 0 | 1,593 | Jan 03 | 587 |
| 1977-78 | R.I. | | | | Mar 04 | 6,941 |
| 1978-79 | R.I. | | | | Mar 28 | 269 |
| 1979-80 | R.I. | | | | Feb 16 | 2793* |
| 1980-81 | 1,857 | 84 | 0 | 2,337 | Jan 29 | 802 |
| 1981-82 | 6,574 | 199 | 0 | 6,569 | Mar 17 | 272 |
| 1982-83 | 26,491 | 2,571 | 0 | 26,338 | Mar 02 | 3,419 |
| 1983-84 | 937 | 100 | 0 | 1,074 | Oct 01 | 105 |
| 1984-85 | 1,320 | 129 | 0 | 1,320 | Dec 19 | 480 |
| 1985-86 | 2,877 | 166 | 0 | 2,877 | Feb 15 | 282 |
| 1986-87 | N.D. | N.D. | | N.D. | Jan 04 | 202 |
| 1987-88 | 2,346 | 96 | 0 | 2,346 | Oct 31 | 226 |
| 1988-89 | 113 | 18 | 0 | 113 | Dec 16 | 54 |
| 1989-90 | 142 | 12 | 0 | 142 | Feb 17 | 88 |
| 1990-91 | 4,997 | 523 | 0 | 4,997 | Mar 01 | 924 |
| 1991-92 | 19,885 | 1,310 | 0 | 19,885 | Feb 12 | 3,107 |
| 1992-93 | 60,794 | 1,134 | 0 | 60,793 | Jan 17 | 2,213 |
| 1993-94 | 1,456 | 21 | 0 | 1,456 | Feb 17 | 25 |
| 1994-95 | 21,173 | 1,030 | 0 | 21,173 | Jan 10 | 2,493 |
| 1995-96 | 3,119 | 414 | 0 | 3,120 | Feb 21 | 584 |
| 1996-97 | R.I. | | | | | N.D. |
| 1997-98 | R.I. | | | | | N.D. |
| 1998-99 | | | | | | N.D. |
| 1999-00 | 15,780 | 471 | 0 | 15,780 | Mar 05 | 818 |
| 2000-01 | 12,260 | 493 | 0 | 12,290 | Feb 13 | 628 |
| 2001-02 | 1,730 | 66 | 0 | 1,680 | Nov 24 | 395 |
| 2002-03 | 3,140 | 272 | 0 | 1,980 | Feb 12 | 770 |
| 2003-04 | 2,070 | 245 | 0 | 1,600 | Feb 26 | 1,250 |
| 2004-05 | 134,400 | 8,370 | 0 | 134,200 | Jan 09 | 9,870 |
| 2005-06 | 6,570 | 407 | 0 | 6,150 | Jan 02 | 1,640 |
| 2006-07 | 4,720 | 195 | 0 | 4,770 | Feb 27 | 1,350 |

N.D. Not determined

R.I. Records incomplete

\+ Less than 0.05 acre feet or less than 0.05 cfs, but greater than 0

## RESERVOIRS - YEARLY RESERVOIR OPERATION SUMMARY

### Devil's Gate Dam

| Season | Inflow Annual (AF) | Daily Mean Inflow | | Outflow Annual (AF) | Peak Inflow | |
|---|---|---|---|---|---|---|
| | | Max-Day (CFS) | Min-Day (CFS) | | Date | Q (CFS) |
| 2007-08 | 13,960 | 735 | 0 | 13,360 | Jan 04 | 5,720 |
| 2008-09 | 2,570 | 279 | 0 | 2,670 | Nov 26 | 1,250 |
| 2009-10 | 19,130 | 1,290 | 0 | 17,320 | Feb 06 | 5,500 |
| 2010-11 | 42,550 | 1,890 | 0.1 | 41,660 | Dec 21 | 6,440 |
| 2011-12 | 2,300 | 93 | 0 | 1,950 | Nov 20 | 1,040 |
| 2012-13 | 513 | 34 | 0 | 428 | Oct 11 | 479 |
| 2013-14 | 824 | 238 | 0 | 440 | Feb 28 | 673 |
| 2014-15 | 701 | 88 | 0 | 276 | Dec 12 | 437 |
| 2015-16 | 738 | 71 | 0 | 670 | Jan 05 | 454 |
| 2016-17 | 4,290 | 273 | 0 | 4,050 | Feb 17 | 1,160 |
| 2017-18 | 850 | 63 | 0.0 | 810 | Jan 09 | 274 |
| 2018-19 | 8,230 | 395 | 0.0 | 8,210 | Jan 17 | 1,140 |
| 2019-20 | 3,130 | 181 | 0.0 | 3,110 | Apr 09 | 352 |

N.D. Not determined

R.I. Records incomplete

\+ Less than 0.05 acre feet or less than 0.05 cfs, but greater than 0

## RESERVOIRS - YEARLY RESERVOIR OPERATION SUMMARY

### Eaton Wash Dam

| Season | Inflow Annual (AF) | Daily Mean Inflow | | Outflow Annual (AF) | Peak Inflow | |
|---|---|---|---|---|---|---|
| | | Max-Day (CFS) | Min-Day (CFS) | | Date | Q (CFS) |
| 1936-37 | 3,062 | 112 | 0 | 1,502 | | N.D. |
| 1937-38 | 6,993 | 883 | 0 | 5,213 | Mar 02 | 2,670 |
| 1938-39 | 340 | 51 | 0 | 84 | Dec 18 | 169 |
| 1939-40 | 390 | 31 | 0 | 96 | Jan 08 | 220 |
| 1940-41 | 7,323 | 188 | 0 | 6,089 | Feb 20 | 426 |
| 1941-42 | 78 | 11 | 0 | 0 | Dec 10 | 73 |
| 1942-43 | 7,212 | 498 | 0 | 6,399 | Jan 23 | 1,700 |
| 1943-44 | 2,901 | 265 | 0 | 1,970 | Feb 22 | 371 |
| 1944-45 | 331 | 52 | 0 | 101 | Nov 11 | 204 |
| 1945-46 | 514 | 77 | 0 | 265 | Dec 23 | 284 |
| 1946-47 | 746 | 74 | 0 | 507 | Nov 13 | 286 |
| 1947-48 | 64 | 11 | 0 | 5 | Apr 28 | 90 |
| 1948-49 | 36 | 5 | 0 | 1 | Jan 20 | 10 |
| 1949-50 | 188 | 23 | 0 | 61 | Dec 18 | 88 |
| 1950-51 | 44 | 4 | 0 | 8 | Jan 11 | 80 |
| 1951-52 | 2,636 | 151 | 0 | 2,020 | Jan 16 | 495 |
| 1952-53 | 145 | 18 | 0 | 0 | Dec 01 | 225 |
| 1953-54 | 533 | 56 | 0 | 202 | Jan 19 | 220 |
| 1954-55 | 146 | 14 | 0 | 0 | Jan 18 | 91 |
| 1955-56 | 330 | 123 | 0 | 151 | Jan 26 | 422 |
| 1956-57 | 127 | 20 | 0 | 9 | Feb 23 | 138 |
| 1957-58 | 3,114 | 150 | 0 | 2,248 | Apr 01 | 443 |
| 1958-59 | 301 | 46 | 0 | 152 | Jan 06 | 702 |
| 1959-60 | 60 | 6 | 0 | 0 | Jan 11 | 48 |
| 1960-61 | 61 | 10 | 0 | 0 | Jan 26 | 39 |
| 1961-62 | 1,729 | 322 | 0 | 1,299 | Feb 11 | 737 |
| 1962-63 | 177 | 51 | 0 | 19 | Feb 09 | 198 |
| 1963-64 | 222 | 38 | 0 | 33 | Jan 22 | 246 |
| 1964-65 | 534 | 49 | 0 | 328 | Apr 09 | 220 |
| 1965-66 | 5,400 | 415 | 0 | 4,267 | Dec 29 | 1,520 |
| 1966-67 | 3,856 | 317 | 0 | 1,907 | Dec 06 | 595 |
| 1967-68 | 1,304 | 133 | 0 | 404 | Nov 19 | 331 |
| 1968-69 | 20,866 | 1,110 | 0 | 18,644 | Jan 25 | 2,540 |
| 1969-70 | 718 | 90 | 0 | 527 | Mar 05 | 878 |
| 1970-71 | 809 | 178 | 0 | 581 | Nov 29 | 457 |
| 1971-72 | 207 | 42 | 0 | + | Dec 27 | 107 |
| 1972-73 | 4,299 | 532 | 0 | 2,844 | Feb 11 | 587 |

N.D. Not determined

R.I. Records incomplete

\+ Less than 0.05 acre feet or less than 0.05 cfs, but greater than 0

## RESERVOIRS - YEARLY RESERVOIR OPERATION SUMMARY

### Eaton Wash Dam

| Season | Inflow Annual (AF) | Daily Mean Inflow | | Outflow Annual (AF) | Peak Inflow | |
|---|---|---|---|---|---|---|
| | | Max-Day (CFS) | Min-Day (CFS) | | Date | Q (CFS) |
| 1973-74 | 2,420 | 200 | 0 | 1,607 | Jan 07 | 309 |
| 1974-75 | 672 | 79 | 0 | 418 | Mar 06 | 81 |
| 1975-76 | 893 | 74 | 0 | 424 | Mar 01 | 175 |
| 1976-77 | 461 | 36 | 0 | 281 | Jan 03 | 191 |
| 1977-78 | R.I. | | | | | N.D. |
| 1978-79 | R.I. | | | | | N.D. |
| 1979-80 | R.I. | | | | | N.D. |
| 1980-81 | 578 | 45 | 0 | 587 | Mar 01 | 195 |
| 1981-82 | 1,676 | 121 | 0 | 1,530 | Mar 17 | 200 |
| 1982-83 | 19,050 | 732 | 0 | 18,941 | Mar 02 | 1,982 |
| 1983-84 | 1,918 | 61 | 0 | 1,929 | Dec 25 | 188 |
| 1984-85 | 701 | 23 | 0 | 698 | Dec 19 | 23 |
| 1985-86 | 1,937 | 56 | 0 | 1,933 | Jan 30 | 223 |
| 1986-87 | N.D. | 27 | 0 | N.D. | Jan 04 | N.D. |
| 1987-88 | 848 | 55 | 0 | 649 | Feb 01 | 228 |
| 1988-89 | 322 | 26 | 0 | 182 | Dec 16 | 74 |
| 1989-90 | 233 | 40 | 0 | 131 | Feb 17 | 63 |
| 1990-91 | 1,602 | 127 | 0 | 1,589 | Mar 01 | 239 |
| 1991-92 | 5,693 | 295 | 0 | 5,678 | Feb 11 | 1,068 |
| 1992-93 | 14,662 | 340 | 0 | 14,661 | Jan 07 | 937 |
| 1993-94 | 1,100 | 26 | 0 | 984 | Feb 08 | 51 |
| 1994-95 | 7,500 | 225 | 0 | 7,461 | Jan 10 | 757 |
| 1995-96 | 1,891 | 158 | 0 | 1,865 | Feb 20 | 266 |
| 1996-97 | R.I. | | | | | N.D. |
| 1997-98 | 6,514 | 308 | 0 | 6,514 | Feb 23 | 1,418 |
| 1998-99 | | | | | | N.D. |
| 1999-00 | 886 | 60 | 0 | 712 | Feb 20 | 232 |
| 2000-01 | 965 | 77 | 0 | 797 | Feb 13 | 179 |
| 2001-02 | 158 | 26 | 0 | 115 | Nov 24 | 217 |
| 2002-03 | 832 | 95 | 0 | 518 | Mar 15 | 244 |
| 2003-04 | 560 | 98 | 0 | 300 | Feb 26 | 363 |
| 2004-05 | 11,870 | 259 | 0 | 11,170 | Oct 20 | 593 |
| 2005-06 | 1,900 | 75 | 0 | 1,470 | Mar 28 | 223 |
| 2006-07 | 106 | 11 | 0 | 16 | Feb 11 | 110 |
| 2007-08 | 2,160 | 141 | 0 | 1,940 | Jan 05 | 803 |
| 2008-09 | 566 | 73 | 0 | 368 | Nov 26 | 222 |
| 2009-10 | 2,960 | 135 | 0 | 2,280 | Jan 18 | 706 |

N.D. Not determined

R.I. Records incomplete

\+ Less than 0.05 acre feet or less than 0.05 cfs, but greater than 0

## RESERVOIRS - YEARLY RESERVOIR OPERATION SUMMARY

### Eaton Wash Dam

| Season | Inflow Annual (AF) | Daily Mean Inflow | | Outflow Annual (AF) | Peak Inflow | |
|---|---|---|---|---|---|---|
| | | Max-Day (CFS) | Min-Day (CFS) | | Date | Q (CFS) |
| 2010-11 | 5,480 | 323 | 0 | 4,570 | Dec 20 | 741 |
| 2011-12 | 321 | 23 | 0 | 56 | Nov 06 | 163 |
| 2012-13 | 62 | 7 | 0 | 41 | Mar 08 | 47 |
| 2013-14 | 130 | 48 | 0 | 84 | Feb 28 | 238 |
| 2014-15 | 234 | 35 | 0 | 136 | Dec 02 | 133 |
| 2015-16 | 239 | 28 | 0 | 44 | Jan 05 | 159 |
| 2016-17 | 1,170 | 75 | 0 | 718 | Feb 17 | 262 |
| 2017-18 | 138 | 17 | 0 | 33 | Jan 09 | 76 |
| 2018-19 | 3,940 | 141 | 0 | 3,710 | Jan 17 | 386 |
| 2010-20 | 925 | 83 | 0.0 | 735 | Apr 06 | 341 |

N.D. Not determined

R.I. Records incomplete

\+ Less than 0.05 acre feet or less than 0.05 cfs, but greater than 0

## RESERVOIRS - YEARLY RESERVOIR OPERATION SUMMARY

# Live Oak Dam

| Season | Inflow Annual (AF) | Daily Mean Inflow | | Outflow Annual (AF) | Peak Inflow | |
|---|---|---|---|---|---|---|
| | | Max-Day (CFS) | Min-Day (CFS) | | Date | Q (CFS) |
| 1932-33 | 0 | 0 | 0 | 0 | | 0 |
| 1933-34 | N.D. | N.D. | N.D. | 142 | | N.D. |
| 1934-35 | 27 | 2 | 0 | 27 | Apr 08 | 16 |
| 1935-36 | N.D. | 4 | 0 | 0 | | N.D. |
| 1936-37 | 494 | 35 | 0 | 413 | Feb 06 | 139 |
| 1937-38 | 800 | 147 | 0 | 785 | Mar 02 | 339 |
| 1938-39 | 21 | 1 | 0 | 3 | Feb 03 | 1 |
| 1939-40 | 16 | 1 | 0 | 1 | Jan 08 | 11 |
| 1940-41 | 719 | 39 | 0 | 718 | Mar 04 | 90 |
| 1941-42 | 0 | + | + | 0 | | + |
| 1942-43 | 827 | 78 | 0 | 827 | Jan 22 | 170 |
| 1943-44 | 218 | 33 | 0 | 218 | Feb 22 | 74 |
| 1944-45 | 177 | 9 | 0 | 177 | Feb 02 | 67 |
| 1945-46 | 105 | 22 | 0 | 89 | Dec 23 | 127 |
| 1946-47 | 64 | 8 | 0 | 45 | Nov 20 | 25 |
| 1947-48 | 0 | 0 | 0 | 0 | | N.D. |
| 1948-49 | 0 | 0 | 0 | 0 | | N.D. |
| 1949-50 | 5 | 0 | 0 | 4 | Dec 19 | 3 |
| 1950-51 | 0 | 0 | 0 | 0 | | N.D. |
| 1951-52 | 362 | 34 | 0 | 343 | Jan 16 | 148 |
| 1952-53 | 2 | + | 0 | 3 | Dec 01 | 1 |
| 1953-54 | 78 | 13 | 0 | 64 | Jan 25 | 82 |
| 1954-55 | 0 | + | 0 | 0 | | N.D. |
| 1955-56 | 77 | 25 | 0 | 72 | Jan 26 | 128 |
| 1956-57 | 2 | 0 | 0 | 0 | Jan 13 | 1 |
| 1957-58 | 699 | 38 | 0 | 699 | Apr 03 | 67 |
| 1958-59 | 6 | 1 | 0 | 5 | Jan 06 | 9 |
| 1959-60 | 0 | 0 | 0 | 0 | | N.D. |
| 1960-61 | 5 | 1 | 0 | 0 | Nov 06 | 22 |
| 1961-62 | 186 | 29 | 0 | 111 | Nov 20 | 366 |
| 1962-63 | 13 | 6 | 0 | 5 | Feb 09 | 23 |
| 1963-64 | 5 | 1 | 0 | 0 | Mar 22 | 6 |
| 1964-65 | 20 | 7 | 0 | 15 | Apr 09 | 58 |
| 1965-66 | 243 | 23 | 0 | 241 | Nov 22 | 116 |
| 1966-67 | 699 | 112 | + | 672 | Dec 06 | 360 |
| 1967-68 | 131 | 6 | 0 | 130 | Mar 08 | 39 |
| 1968-69 | 2,146 | 152 | 0 | 2,115 | Jan 25 | 403 |

N.D. Not determined

R.I. Records incomplete

\+ Less than 0.05 acre feet or less than 0.05 cfs, but greater than 0

## RESERVOIRS - YEARLY RESERVOIR OPERATION SUMMARY

### Live Oak Dam

| Season | Inflow Annual (AF) | Daily Mean Inflow | | Outflow Annual (AF) | Peak Inflow | |
|---|---|---|---|---|---|---|
| | | Max-Day (CFS) | Min-Day (CFS) | | Date | Q (CFS) |
| 1969-70 | 258 | 8 | 0 | 258 | Feb 28 | 14 |
| 1970-71 | 243 | 7 | 0 | 243 | Dec 21 | 16 |
| 1971-72 | 71 | 4 | 0 | 71 | Dec 24 | 5 |
| 1972-73 | 291 | 34 | 0 | 290 | Feb 11 | 52 |
| 1973-74 | 132 | 13 | 0 | 132 | Jan 07 | 31 |
| 1974-75 | 71 | 2 | 0 | 61 | Mar 06 | 14 |
| 1975-76 | 30 | 3 | 0 | 24 | Mar 01 | 7 |
| 1976-77 | 32 | 2 | 0 | 33 | Jan 03 | 13 |
| 1977-78 | 1,517 | 71 | 0 | 1,517 | Mar 04 | 187 |
| 1978-79 | 655 | 18 | 0 | 655 | Mar 27 | 43 |
| 1979-80 | R.I. | | | | | N.D. |
| 1980-81 | 240 | 3 | 0 | 237 | Mar 02 | 4 |
| 1981-82 | 421 | 19 | 0 | 421 | Mar 18 | 32 |
| 1982-83 | 1,778 | 72 | 0 | 1,780 | Mar 01 | 144 |
| 1983-84 | 447 | 12 | 0 | 448 | Dec 25 | 47 |
| 1984-85 | 162 | 4 | 0 | 162 | Dec 19 | 5 |
| 1985-86 | 192 | 4 | 0 | 192 | Feb 16 | 7 |
| 1986-87 | 37 | 1 | 0 | 37 | Jan 04 | 10 |
| 1987-88 | 70 | 3 | 0 | 69 | Jan 17 | 4 |
| 1988-89 | 96 | 6 | 0 | 93 | Feb 04 | 11 |
| 1989-90 | 51 | 2 | 0 | 51 | Feb 17 | 3 |
| 1990-91 | 205 | 22 | 0 | 204 | Mar 01 | 44 |
| 1991-92 | 277 | 26 | 0 | 277 | Feb 12 | 112 |
| 1992-93 | 1,762 | 55 | 0 | 1,759 | Jan 07 | 68 |
| 1993-94 | 230 | 3 | 0 | 235 | Mar 19 | 17 |
| 1994-95 | 820 | 32 | 0 | 820 | Jan 10 | 86 |
| 1995-96 | 357 | 37 | 0 | 357 | Feb 20 | 75 |
| 1996-97 | R.I. | R.I. | | | | N.D. |
| 1997-98 | 813 | 48 | 0 | 773 | Feb 23 | 159 |
| 1998-99 | 18 | 1 | 0 | 104 | Dec 08 | 21 |
| 1999-00 | 81 | 4 | 0 | 78 | Feb 21 | 13 |
| 2000-01 | 61 | 7 | 0 | 120 | Feb 13 | 11 |
| 2001-02 | 5 | 1 | 0 | 2 | Jan 28 | 4 |
| 2002-03 | 157 | 23 | 0 | 49 | Mar 16 | 201 |
| 2003-04 | 200 | 28 | 0 | 230 | Feb 26 | 169 |
| 2004-05 | 2,970 | 155 | 0 | 2,920 | Feb 11 | 339 |
| 2005-06 | 784 | 19 | 0 | 813 | Apr 03 | 305 |

N.D. Not determined

R.I. Records incomplete

\+ Less than 0.05 acre feet or less than 0.05 cfs, but greater than 0

## RESERVOIRS - YEARLY RESERVOIR OPERATION SUMMARY

### Live Oak Dam

| Season | Inflow Annual (AF) | Daily Mean Inflow | | Outflow Annual (AF) | Peak Inflow | |
|---|---|---|---|---|---|---|
| | | Max-Day (CFS) | Min-Day (CFS) | | Date | Q (CFS) |
| 2006-07 | 995 | 4 | 0 | 993 | Apr 20 | 5 |
| 2007-08 | 566 | 20 | 0 | 632 | Jan 05 | 102 |
| 2008-09 | 325 | 4 | 0 | 314 | Feb 16 | 13 |
| 2009-10 | 404 | 10 | 0 | 352 | Feb 06 | 26 |
| 2010-11 | 858 | 27 | 0 | 781 | Dec 22 | 181 |
| 2011-12 | 1,120 | 4 | 0 | 1,130 | Apr 13 | 6 |
| 2012-13 | 122 Est | 1 | 0 | 150 | May 26 | 1 |
| 2013-14 | 0.4 | 0.2 | 0 | 0.5 | Feb 28 | 2 |
| 2014-15 | 1.1 | 0.5 | 0 | 3.2 | Feb 23 | 1 |
| 2015-16 | 4 | 1 | 0 | 4 | Mar 06 | 2 |
| 2016-17 | 453 | 28 | 0 | 471 | Jan 23 | 58 |
| 2017-18 | 33 | 1 | 0.0 | 33 | Apr 10 | 3 |
| 2018-19 | 1,160 | 100 | 0.0 | 1,140 | Feb 14 | 120 |
| 2019-20 | 123 | 11 | 0.0 | 84 | Dec 24 | 94.2 e |

**** 2019-'20 p**eak value is estimated as it ocurred during time reservoir transitioned from being dry to partially filled.*

N.D. Not determined

R.I. Records incomplete

\+ Less than 0.05 acre feet or less than 0.05 cfs, but greater than 0



*.

## RESERVOIRS - YEARLY RESERVOIR OPERATION SUMMARY

# Morris Dam

| Season | Inflow Annual (AF) | Daily Mean Inflow | | Outflow Annual (AF) | Peak Inflow | |
|---|---|---|---|---|---|---|
| | | Max-Day (CFS) | Min-Day (CFS) | | Date | Q (CFS) |
| 1937-38 | 339,303 | 18,590 | 0 | 337,955 | Mar 02 | 70,300 |
| 1938-39 | 62,367 | 890 | 0 | 75,278 | Dec 20 | N.D. |
| 1939-40 | 41,367 | 439 | 1 | 51,030 | Mar 06 | N.D. |
| 1940-41 | 294,818 | 4,137 | 1 | 263,819 | Feb 20 | 4,230 |
| 1941-42 | 21,562 | 419 | 0.1 | 16,504 | Nov 07 | N.D. |
| 1942-43 | 251,552 | 10,380 | 0 | 247,717 | Jan 23 | 12,660 |
| 1943-44 | 149,889 | 2,667 | 0 | 147,194 | May 25 | 5,840 |
| 1944-45 | 49,942 | 1,291 | 0 | 47,340 | Mar 26 | 3,590 |
| 1945-46 | 53,467 | 987 | 0 | 62,578 | Apr 04 | 4,880 |
| 1946-47 | 60,442 | 3,369 | 0 | 55,718 | Dec 28 | 9,300 |
| 1947-48 | 14,004 | 973 | 0 | 17,392 | Dec 12 | 2,380 |
| 1948-49 | 5,387 | 799 | 0 | 3,777 | Jun 02 | N.D. |
| 1949-50 | 1,901 | 70 | 0 | 834 | Dec 05 | N.D. |
| 1950-51 | 5,066 | 180 | 0 | 3,446 | Apr 21 | N.D. |
| 1951-52 | 76,910 | 3,188 | 0 | 69,966 | Jan 16 | 5,200 |
| 1952-53 | 47,762 | 1,003 | 0 | 52,075 | Nov 03 | 1,280 |
| 1953-54 | 30,334 | 1,574 | 0 | 29,069 | Apr 10 | 3,590 |
| 1954-55 | 1,593 | 299 | 0 | 557 | Apr 15 | N.D. |
| 1955-56 | 3,994 | 491 | 0 | 816 | Sep 19 | N.D. |
| 1956-57 | 9,962 | 659 | 0 | 10,574 | Apr 12 | 667 |
| 1957-58 | 216,335 | 2,418 | 0 | 213,390 | Apr 05 | 2,740 |
| 1958-59 | 10,152 | 378 | 0 | 9,665 | Feb 16 | 444 |
| 1959-60 | 2,688 | 359 | 0 | 994 | Jul 09 | N.D. |
| 1960-61 | 6,006 | 459 | 0 | 889 | May 16 | N.D. |
| 1961-62 | 74,783 | 1,847 | 0 | 73,031 | Feb 15 | 2,160 |
| 1962-63 | 1,708 | 99 | 0 | 1,957 | Feb 09 | N.D. |
| 1963-64 | 1,001 | 36 | 0 | 922 | Jan 21 | N.D. |
| 1964-65 | 10,093 | 1,426 | 0 | 8,908 | Jun 05 | 1,430 |
| 1965-66 | 200,376 | 9,263 | 0 | 193,965 | Dec 29 | 10,330 |
| 1966-67 | 203,232 | 3,872 | 0 | 193,246 | Dec 06 | 5,320 |
| 1967-68 | 35,015 | 567 | 0 | 32,902 | May 06 | 675 |
| 1968-69 | 554,905 | 19,290 | 12 | 554,687 | Feb 25 | 29,690 |
| 1969-70 | 68,267 | 1,558 | 0 | 66,131 | Mar 01 | 1,800 |
| 1970-71 | 27,828 | 496 | 0 | 31,319 | Dec 29 | 497 |
| 1971-72 | 21,193 | 298 | 0 | 15,445 | Jan 05 | 302 |
| 1972-73 | 1,107,052 | 840 | 0 | 114,349 | Feb 11 | 924 |
| 1973-74 | 27,471 | 1,054 | 0 | 30,553 | Jan 08 | 3,410 |

N.D. Not determined

R.I. Records incomplete

\+ Less than 0.05 acre feet or less than 0.05 cfs, but greater than 0

## RESERVOIRS - YEARLY RESERVOIR OPERATION SUMMARY

### Morris Dam

| Season | Inflow Annual (AF) | Daily Mean Inflow | | Outflow Annual (AF) | Peak Inflow | |
|---|---|---|---|---|---|---|
| | | Max-Day (CFS) | Min-Day (CFS) | | Date | Q (CFS) |
| 1974-75 | 9,838 | 313 | 0.2 | 7,366 | Nov 20 | 389 |
| 1975-76 | 2,270 | 47 | 0.2 | 2,110 | Sep 30 | 125 |
| 1976-77 | | | | | | N.D. |
| 1977-78 | | | | | | N.D. |
| 1978-79 | | | | | | N.D. |
| 1979-80 | | | | | | N.D. |
| 1980-81 | | | | | | N.D. |
| 1981-82 | | | | | | N.D. |
| 1982-83 | | | | | | N.D. |
| 1983-84 | | | | | | N.D. |
| 1984-85 | | | | | | N.D. |
| 1985-86 | | | | | | N.D. |
| 1986-87 | | | | | | N.D. |
| 1987-88 | | | | | | N.D. |
| 1988-89 | | | | | | N.D. |
| 1989-90 | | | | | | N.D. |
| 1990-91 | | | | | | N.D. |
| 1991-92 | | | | | | N.D. |
| 1992-93 | | | | | | N.D. |
| 1993-94 | | | | | | N.D. |
| 1994-95 | 207,136 | 3,858 | 1.3 | 201,716 | Jan 10 | N.D. |
| 1995-96 | 41,898 | 454 | 1.3 | 47,242 | Feb 20 | N.D. |
| 1996-97 | 38,827 | 313 | 1.5 | 38,822 | | N.D. |
| 1997-98 | 197,600 | 5,390 | 0 | 209,900 | Feb 23 | 10,800 |
| 1998-99 | 35,930 | 233 | 0 | 15,000 | Feb 16 | 418 |
| 1999-00 | 22,540 | 266 | 0 | 25,240 | Dec 30 | 997 |
| 2000-01 | 24,550 | 251 | 0 | 19,830 | Feb 13 | 156 |
| 2001-02 | 3,330 | 28 | 0 | 4,890 | Jan 27 | 115 |
| 2002-03 | 42,050 | 861 | 0 | 34,400 | Nov 19 | 1,590 |
| 2003-04 | 35,130 | 447 | 0 | 29,600 | Oct 10 | 717 |
| 2004-05 | 408,300 | 9,050 | 0 | 407,900 | Feb 20 | 11,600 |
| 2005-06 | 91,830 | 1,040 | 0 | 85,710 | May 07 | 2,770 |
| 2006-07 | 9,110 | 164 | 0 | 11,370 | Feb 16 | 220 |
| 2007-08 | 74,490 | 514 | 0 | 68,630 | Apr 23 | 1,330 |
| 2008-09 | 21,850 | 365 | 0 | 28,360 | Oct 01 | 512 |
| 2009-10 | 100,700 | 702 | 0 | 101,000 | Feb 25 | 782 |
| 2010-11 | 179,800 | 1,860 | 0 | 172,300 | Dec 25 | 2,500 |

N.D. Not determined

R.I. Records incomplete

\+ Less than 0.05 acre feet or less than 0.05 cfs, but greater than 0

## RESERVOIRS - YEARLY RESERVOIR OPERATION SUMMARY

### Morris Dam

| Season | Inflow Annual (AF) | Daily Mean Inflow | | Outflow Annual (AF) | Peak Inflow | |
|---|---|---|---|---|---|---|
| | | Max-Day (CFS) | Min-Day (CFS) | | Date | Q (CFS) |
| 2011-12 | 23,930 | 419 | 0 | 24,880 | Nov 08 | 1,380 |
| 2012-13 | 9,370 | 660 | 0 | 11,040 | Dec 27 | 729 |
| 2013-14 | 15,490 | 128 | 0 | 12,900 | May 06 | 440 estimated |
| 2014-15 | 4,000 | 73 | 0 | 4,460 | Sep 16 | 188 |
| 2015-16 | 12,660 | 721 | 0 | 11,980 | Dec 18 | 929 |
| 2016-17 | 66,530 | 838 | 0 | 58,580 | Jan 23 | 1,370 |
| 2017-18 | 15,500 | 200 | 0.0 | 19,810 | Oct 25 | 822 |
| 2018-19 | 126,900 | 1,690 | 0.0 | 131,800 | Feb 04 | 2,620 |
| 2019-20 | 81,690 | 1,060 | 0.0 | 75,840 | Apr 10 | 1,900 |

N.D. Not determined

R.I. Records incomplete

\+ Less than 0.05 acre feet or less than 0.05 cfs, but greater than 0

## RESERVOIRS - YEARLY RESERVOIR OPERATION SUMMARY

# Pacoima Dam

| Season | Inflow Annual (AF) | Daily Mean Inflow | | Outflow Annual (AF) | Peak Inflow | |
|---|---|---|---|---|---|---|
| | | Max-Day (CFS) | Min-Day (CFS) | | Date | Q (CFS) |
| 1929-30 | 1,110 | N.D. | N.D. | 965 | | N.D. |
| 1930-31 | 1,082 | N.D. | N.D. | 886 | | N.D. |
| 1931-32 | 8,741 | N.D. | N.D. | 8,443 | | N.D. |
| 1932-33 | 2,160 | 101 | 0 | 2,119 | | N.D. |
| 1933-34 | 3,454 | N.D. | N.D. | 3,493 | Jan 01 | 914 |
| 1934-35 | 5,569 | 84 | 0 | 5,556 | | N.D. |
| 1935-36 | 3,098 | 88 | 0 | 3,094 | Feb 12 | 248 |
| 1936-37 | 15,737 | 356 | 0 | 14,210 | Feb 14 | 508 |
| 1937-38 | 25,878 | 2,360 | 0 | 26,796 | Mar 02 | 8,320 |
| 1938-39 | 3,525 | 86 | 0 | 3,080 | Dec 19 | 145 |
| 1939-40 | 3,209 | 156 | 0 | 3,133 | Jan 08 | 928 |
| 1940-41 | 25,785 | 536 | 0 | 25,942 | Mar 04 | 815 |
| 1941-42 | 1,920 | 48 | 0.1 | 2,032 | Dec 29 | 85 |
| 1942-43 | 20,698 | 1,250 | 0.1 | 20,407 | Jan 23 | 2,650 |
| 1943-44 | 15,004 | 898 | 0.4 | 15,167 | Feb 22 | 1,790 |
| 1944-45 | 4,866 | 206 | 0.4 | 4,911 | Feb 02 | 494 |
| 1945-46 | 4,600 | 332 | 0 | 2,904 | Mar 30 | 564 |
| 1946-47 | 4,356 | 149 | 0 | 6,029 | Nov 20 | 282 |
| 1947-48 | 369 | 6 | 0.1 | 335 | Apr 29 | 12 |
| 1948-49 | 723 | 10 | 0.1 | 740 | Mar 05 | 17 |
| 1949-50 | 1,063 | 19 | 0.1 | 1,019 | Feb 06 | 26 |
| 1950-51 | 142 | 1 | 0 | 69 | Apr 29 | 2 |
| 1951-52 | 16,794 | 681 | 0 | 4,325 | Jan 16 | 1,290 |
| 1952-53 | 967 | 9 | 0 | 3,500 | Dec 01 | 32 |
| 1953-54 | 2,952 | 107 | 0.1 | 2,941 | Jan 25 | 272 |
| 1954-55 | 748 | 18 | 0.1 | 737 | Apr 30 | 25 |
| 1955-56 | 1,466 | 90 | 0 | 1,252 | Jan 27 | 179 |
| 1956-57 | 573 | 10 | 0 | 773 | Jan 13 | 14 |
| 1957-58 | 15,818 | 714 | 0 | 15,808 | Apr 03 | 1,180 |
| 1958-59 | 783 | 29 | 0 | 708 | Jan 06 | 184 |
| 1959-60 | 131 | 1 | 0 | 271 | Jan 11 | 2 |
| 1960-61 | 59 | 6 | 0 | 11 | Nov 12 | 60 |
| 1961-62 | 6,326 | 584 | 0.1 | 6,279 | Feb 11 | 811 |
| 1962-63 | 384 | 8 | 0.1 | 228 | Feb 10 | 19 |
| 1963-64 | 529 | 8 | 0.1 | 722 | Jan 22 | 56 |
| 1964-65 | 1,313 | 70 | 0.1 | 1,048 | Apr 09 | 160 |
| 1965-66 | 15,553 | 647 | 0 | 15,214 | Nov 22 | 2,010 |

N.D. Not determined

R.I. Records incomplete

\+ Less than 0.05 acre feet or less than 0.05 cfs, but greater than 0

## RESERVOIRS - YEARLY RESERVOIR OPERATION SUMMARY

### Pacoima Dam

| Season | Inflow Annual (AF) | Daily Mean Inflow | | Outflow Annual (AF) | Peak Inflow | |
|---|---|---|---|---|---|---|
| | | Max-Day (CFS) | Min-Day (CFS) | | Date | Q (CFS) |
| 1966-67 | 23,605 | 698 | 0.4 | 23,600 | Dec 06 | 1,380 |
| 1967-68 | 3,843 | 76 | 0 | 3,833 | Nov 21 | 107 |
| 1968-69 | 43,398 | 2,860 | 0 | 42,998 | Feb 25 | 4,710 |
| 1969-70 | 2,717 | 99 | 0.4 | 2,308 | Mar 01 | 276 |
| 1970-71 | 4,806 | 118 | 0.5 | 4,994 | Nov 29 | 384 |
| 1971-72 | 1,062 | 36 | 0.2 | 802 | Dec 26 | 91 |
| 1972-73 | 7,726 | 696 | 0.1 | 7,383 | Feb 11 | 1,640 |
| 1973-74 | 4,197 | 168 | 0.2 | 4,154 | Jan 08 | 532 |
| 1974-75 | 2,279 | 48 | 0.1 | 2,526 | Mar 06 | 97 |
| 1975-76 | 1,622 | 58 | 0.1 | 1,614 | Feb 09 | 102 |
| 1976-77 | 1,424 | 43 | 0.3 | 507 | Jan 03 | 213 |
| 1977-78 | R.I. | | | | | N.D. |
| 1978-79 | R.I. | | | | | N.D. |
| 1978-80 | R.I. | | | | | N.D. |
| 1980-81 | 2,731 | 66 | 0 | 3,440 | Jan 29 | 167 |
| 1981-82 | 5,979 | 226 | 0.3 | 4,867 | Mar 17 | 590 |
| 1982-83 | 43,336 | 2,359 | 0.5 | 44,566 | Mar 01 | 4,671 |
| 1983-84 | 3,521 | 88 | 0.2 | 1,386 | Dec 25 | 153 |
| 1984-85 | 2,853 | 79 | 0 | 3,651 | Dec 20 | 104 |
| 1985-86 | 7,886 | 279 | 0 | 7,015 | Feb 15 | N.D. |
| 1986-87 | 638 | 7 | 0 | 224 | Jan 04 | 9 |
| 1987-88 | 3,522 | 52 | 0.1 | 3,441 | Oct 23 | 93 |
| 1988-89 | 2,398 | 40 | 0 | 2,065 | Feb 04 | 72 |
| 1989-90 | 784 | 27 | 0 | 817 | Feb 17 | 59 |
| 1990-91 | 3,520 | 127 | 0 | 3,222 | Mar 27 | 140 |
| 1991-92 | N.D. | 708 | 0 | N.D. | Feb 10 | 1,180 |
| 1992-93 | 40,473 | 929 | 0.1 | 39,814 | Jan 13 | 1,186 |
| 1993-94 | 2,465 | 27 | 0 | 3,354 | Feb 08 | 46 |
| 1994-95 | 23,547 | 351 | 0 | 23,710 | Jan 10 | 1,073 |
| 1995-96 | 7,655 | 389 | 0 | 7,710 | Feb 21 | 532 |
| 1996-97 | 6,497 | 163 | 1.2 | 5,417 | | N.D. |
| 1997-98 | 29,980 | 1,250 | 0 | 29,760 | Feb 23 | 3,040 |
| 1998-99 | 3,600 | 46 | 0.4 | 2,110 | Jan 08 | 109 |
| 1999-00 | 2,520 | 56 | 0 | 1,830 | Feb 22 | 80 |
| 2000-01 | 3,190 | 62 | 0 | 2,710 | Feb 14 | 79 |
| 2001-02 | 450 | 7 | 0 | 408 | Jan 27 | 25 |
| 2002-03 | 4,280 | 79 | 0 | 2,650 | Feb 12 | 265 |

N.D. Not determined

R.I. Records incomplete

\+ Less than 0.05 acre feet or less than 0.05 cfs, but greater than 0

## RESERVOIRS - YEARLY RESERVOIR OPERATION SUMMARY

### Pacoima Dam

| Season | Inflow Annual (AF) | Daily Mean Inflow | | Outflow Annual (AF) | Peak Inflow | |
|---|---|---|---|---|---|---|
| | | Max-Day (CFS) | Min-Day (CFS) | | Date | Q (CFS) |
| 2003-04 | 1,710 | 81 | 0 | 1,320 | Feb 26 | 201 |
| 2004-05 | 53,180 | 2,280 | 0 | 52,750 | Jan 09 | 3,930 |
| 2005-06 | 10,490 | 272 | 0 | 8,230 | Jan 02 | 382 |
| 2006-07 | 256 | 4 | 0 | 138 | Sep 23 | 22 |
| 2007-08 | 7,620 | 482 | 0 | 6,870 | Jan 28 | 716 |
| 2008-09 | 2,900 | 59 | 0 | 2,950 | Feb 19 | 69 |
| 2009-10 | 11,250 | 251 | 0 | 10,470 | Jan 18 | 1,080 |
| 2010-11 | 23,880 | 465 | 0.1 | 23,630 | Mar 20 | 766 |
| 2011-12 | 3,010 | 30 | 0.4 | 2,440 | Mar 25 | 64 |
| 2012-13 | 658 | 7 | 0 | 428 | Oct 11 | 11 |
| 2013-14 | 849 | 83 | 0 | 549 | Feb 28 | 352 |
| 2014-15 | 212 | 5.7 | 0 | 31 | Dec 17 | 52 |
| 2015-16 | 582 | 18 | 0 | 1,620 | Jan 06 | 197 |
| 2016-17 | 9,260 | 158 | 0 | 7,980 | Feb 17 | 902 |
| 2017-18 | 3,980 | 88 | 0.0 | 1,930 | Mar 22 | 140 |
| 2018-19 | 16,620 | 497 | 0.0 | 16,270 | Feb 04 | 969 |
| 2019-20 | 5,930 | 140 | 0.2 | 4,510 | Apr 06 | 251 |

N.D. Not determined

R.I. Records incomplete

\+ Less than 0.05 acre feet or less than 0.05 cfs, but greater than 0

## RESERVOIRS - YEARLY RESERVOIR OPERATION SUMMARY

### Puddingstone Dam

| Season | Inflow Annual (AF) | Daily Mean Inflow | | Outflow Annual (AF) | Peak Inflow | |
|---|---|---|---|---|---|---|
| | | Max-Day (CFS) | Min-Day (CFS) | | Date | Q (CFS) |
| 1928-29 | 114 | 12 | 0 | 151 | | N.D. |
| 1929-30 | 295 | 15 | 0 | 223 | | N.D. |
| 1930-31 | 73 | 9 | 0 | 119 | | N.D. |
| 1931-32 | 1,547 | 162 | 0 | 1,086 | | N.D. |
| 1932-33 | 314 | 30 | 0 | 906 | | N.D. |
| 1933-34 | 2,669 | 596 | 0 | 1,809 | | N.D. |
| 1934-35 | 610 | N.D. | N.D. | 846 | Jan 15 | 205 |
| 1935-36 | 703 | 54 | 0 | 969 | Apr 10 | 590 |
| 1936-37 | 5,732 | 303 | 0 | 2,173 | Feb 06 | 1,480 |
| 1937-38 | 12,221 | 2,200 | 0 | 7,544 | Mar 02 | 5,310 |
| 1938-39 | 1,576 | 101 | 0 | 5,305 | | N.D. |
| 1939-40 | 646 | 54 | 0 | 2,524 | Jan 07 | 448 |
| 1940-41 | 12,030 | 377 | 0 | 3,308 | Mar 04 | 1,080 |
| 1941-42 | 475 | 30 | 0 | 4,385 | Dec 10 | 409 |
| 1942-43 | 10,043 | 1,130 | 0 | 4,836 | Jan 23 | 2,300 |
| 1943-44 | 3,408 | 525 | 0 | 3,178 | Feb 22 | 1,030 |
| 1944-45 | 1,615 | 139 | 0 | 2,376 | Nov 11 | 484 |
| 1945-46 | 1,591 | 275 | 0 | 6,009 | Dec 23 | 929 |
| 1946-47 | 1,414 | 96 | 0 | 788 | Nov 13 | 445 |
| 1947-48 | 324 | 31 | 0 | 362 | Dec 05 | 195 |
| 1948-49 | 336 | 21 | 0 | 201 | Mar 13 | 240 |
| 1949-50 | 493 | 55 | 0 | 140 | Feb 06 | 178 |
| 1950-51 | 182 | 15 | 0 | 145 | Jan 29 | 162 |
| 1951-52 | 4,673 | 353 | 0 | 1,857 | Jan 16 | 952 |
| 1952-53 | 928 | 32 | 0 | 1,140 | Dec 01 | 358 |
| 1953-54 | 31,282 | 244 | 0 | 31,609 | Jan 25 | 600 |
| 1954-55 | 26,065 | 255 | 0 | 23,287 | Nov 11 | 338 |
| 1955-56 | 57,309 | 458 | 0 | 50,771 | Jan 26 | 1,360 |
| 1956-57 | 50,583 | 216 | 0 | 53,781 | Jan 13 | 262 |
| 1957-58 | 6,670 | 302 | 0 | 1,976 | Apr 03 | 690 |
| 1958-59 | 394 | 68 | 0 | 72 | Jan 06 | 871 |
| 1959-60 | 837 | 80 | 0 | 40 | Jan 12 | 148 |
| 1960-61 | 10,900 | 198 | 0 | 9,416 | Nov 06 | N.D. |
| 1961-62 | 4,463 | 173 | 0 | 33 | Dec 02 | 963 |
| 1962-63 | 927 | 139 | 0 | 464 | Feb 10 | 325 |
| 1963-64 | 594 | 43 | 0 | 0 | Jan 22 | 242 |
| 1964-65 | 2,675 | 153 | 0 | 7,401 | Apr 09 | 1,770 |

N.D. Not determined

R.I. Records incomplete

\+ Less than 0.05 acre feet or less than 0.05 cfs, but greater than 0

## RESERVOIRS - YEARLY RESERVOIR OPERATION SUMMARY

### Puddingstone Dam

| Season | Inflow Annual (AF) | Daily Mean Inflow | | Outflow Annual (AF) | Peak Inflow | |
|---|---|---|---|---|---|---|
| | | Max-Day (CFS) | Min-Day (CFS) | | Date | Q (CFS) |
| 1965-66 | 10,456 | 444 | 0 | 3,066 | Nov 22 | 1,590 |
| 1966-67 | 11,508 | 1,090 | 0 | 9,988 | Dec 06 | 2,440 |
| 1967-68 | 15,811 | 174 | 0 | 14,275 | Mar 08 | 760 |
| 1968-69 | 36,802 | 2,830 | 0 | 35,754 | Jan 25 | 4,340 |
| 1969-70 | 1,650 | 163 | 0.2 | + | Mar 01 | 507 |
| 1970-71 | 1,494 | 149 | 0.1 | 4,094 | Dec 18 | 365 |
| 1971-72 | 1,007 | 186 | + | + | Dec 24 | 538 |
| 1972-73 | 4,038 | 341 | 0.1 | + | Feb 11 | 604 |
| 1973-74 | 2,409 | 310 | 0.1 | 1,069 | Jan 07 | 660 |
| 1974-75 | 1,832 | 153 | 0 | 1,832 | Dec 04 | 769 |
| 1975-76 | 2,644 | 180 | 0.1 | 0 | Sep 10 | 493 |
| 1976-77 | 2,655 | 138 | 0.1 | 197 | Jan 03 | 812 |
| 1977-78 | R.I | | | | | N.D. |
| 1978-79 | R.I | | | | | N.D. |
| 1979-80 | R.I | | | | | N.D. |
| 1980-81 | 2,115 | 154 | 0 | 515 | Jan 29 | 1,132 |
| 1981-82 | 4,731 | 350 | 0 | 2,598 | Mar 18 | 810 |
| 1982-83 | 15,956 | 764 | 0 | 15,238 | Mar 01 | 2,570 |
| 1983-84 | 2,791 | 192 | 0 | 2,048 | Dec 25 | 1,159 |
| 1984-85 | 2,688 | 143 | 0 | 873 | Dec 18 | 236 |
| 1985-86 | 4,888 | 241 | 0 | 3,150 | Mar 16 | 1,058 |
| 1986-87 | 1,989 | 291 | 0 | 1,118 | Jan 04 | 854 |
| 1987-88 | 4,010 | 143 | 0 | 2,373 | Jan 17 | 422 |
| 1988-89 | 3,539 | 117 | 0 | 2,045 | Feb 04 | 211 |
| 1989-90 | 2,545 | 235 | 0 | 977 | Feb 17 | 683 |
| 1990-91 | 4,461 | 371 | 0 | 2,932 | Mar 01 | 1,270 |
| 1991-92 | 6,781 | 407 | 0 | 5,333 | Feb 12 | 959 |
| 1992-93 | 30,324 | 909 | 0 | 28,674 | Jan 18 | 1,992 |
| 1993-94 | 2,884 | 78 | 0.1 | 1,322 | Feb 07 | 212 |
| 1994-95 | 11,261 | 537 | 0.1 | 9,927 | Jan 10 | 1,411 |
| 1995-96 | 4,587 | 438 | 0 | 3,275 | Feb 20 | 1,460 |
| 1996-97 | 4,690 | 171 | 0 | 3,960 | Jan 25 | 307 |
| 1997-98 | 18,560 | 638 | 0 | 16,570 | Feb 23 | 1,240 |
| 1998-99 | 1,360 | 58 | 0 | 967 | Feb 10 | 338 |
| 1999-00 | 2,950 | 187 | 0 | 1,810 | Feb 24 | 803 |
| 2000-01 | 3,790 | 203 | 0 | 2,930 | Jan 11 | 598 |
| 2001-02 | 1,470 | 117 | 0 | 646 | Nov 24 | 184 |

N.D. Not determined

R.I. Records incomplete

\+ Less than 0.05 acre feet or less than 0.05 cfs, but greater than 0

## RESERVOIRS - YEARLY RESERVOIR OPERATION SUMMARY

### Puddingstone Dam

| Season | Inflow Annual (AF) | Daily Mean Inflow | | Outflow Annual (AF) | Peak Inflow | |
|---|---|---|---|---|---|---|
| | | Max-Day (CFS) | Min-Day (CFS) | | Date | Q (CFS) |
| 2002-03 | 5,540 | 368 | 0 | 3,560 | Mar 16 | 534 |
| 2003-04 | 3,510 | 172 | 0 | 1,550 | Feb 26 | 242 |
| 2004-05 | 19,800 | 796 | 0 | 17,890 | Feb 19 | 1,320 |
| 2005-06 | 6,050 | 209 | 0 | 2,790 | Mar 28 | 917 |
| 2006-07 | 5,180 | 78 | 0 | 438 | Jan 31 | 516 |
| 2007-08 | 810 | 312 | 0 | 3,750 | Jan 05 | 2,070 |
| 2008-09 | 3,050 | 175 | 0 | 2,000 | Feb 05 | 1,370 |
| 2009-10 | 4,840 | 324 | 0 | 3,030 | Feb 06 | 1,800 |
| 2010-11 | 10,460 | 781 | 0 | 9,540 | Dec 22 | 1,270 |
| 2011-12 | 2,630 | 99 | 0 | 613 | Oct 05 | 389 |
| 2012-13 | 1,570 | 42 | 0 | 35 | Dec 13 | 234 |
| 2013-14 | 1,670 | 183 | 0 | 59 | Feb 28 | 817 |
| 2014-15 | 2,980 | 120 | 0 | 39 | Dec 02 | 489 |
| 2015-16 | 3,100 | 118 | 0 | 257 | Jan 05 | 514 |
| 2016-17 | 8,160 | 354 | 0 | 5,000 | Jan 22 | 1,250 |
| 2017-18 | 3,030 | 177 | 0.0 | 541 | Jan 09 | 514 |
| 2018-19 | 8,180 | 499 | 0.0 | 4,790 | Feb 14 | 1,280 |
| 2019-20 | 5,870 | 308 | 0.0 | 2,250 | Dec 26 | 1,130 |

N.D. Not determined

R.I. Records incomplete

\+ Less than 0.05 acre feet or less than 0.05 cfs, but greater than 0

## RESERVOIRS - YEARLY RESERVOIR OPERATION SUMMARY

# Puddingstone Diversion Dam

| Season | Inflow Annual (AF) | Daily Mean Inflow | | Outflow Annual (AF) | Peak Inflow | |
|---|---|---|---|---|---|---|
| | | Max-Day (CFS) | Min-Day (CFS) | | Date | Q (CFS) |
| 1935-36 | 304 | 48 | 0 | 304 | Apr 10 | 85 |
| 1936-37 | 5,019 | 104 | 0 | 4,646 | | N.D. |
| 1937-38 | 11,697 | 1,640 | 0 | 11,506 | Mar 02 | 5,760 |
| 1938-39 | 1,288 | 28 | 0 | 1,293 | Jan 10 | N.D. |
| 1939-40 | 350 | 26 | 0 | 155 | Jan 08 | 33 |
| 1940-41 | 7,213 | 133 | 0 | 6,776 | Mar 14 | 155 |
| 1941-42 | 341 | 13 | 0 | 203 | Dec 12 | 24 |
| 1942-43 | 8,593 | 970 | 0 | 7,939 | Jan 23 | 2,040 |
| 1943-44 | 3,406 | 357 | 0 | 3,010 | Feb 22 | 724 |
| 1944-45 | 1,719 | 64 | 0 | 1,294 | Feb 02 | 88 |
| 1945-46 | 970 | 159 | 0 | 773 | Dec 23 | 234 |
| 1946-47 | 1,400 | 55 | 0 | 1,109 | Dec 26 | 58 |
| 1947-48 | 0 | 0 | 0 | 0 | | N.D. |
| 1948-49 | 0 | 0 | 0 | 0 | | N.D. |
| 1949-50 | 0 | 0 | 0 | 0 | | N.D. |
| 1950-51 | 0 | 0 | 0 | 0 | | N.D. |
| 1951-52 | 3,366 | 158 | 0 | 2,910 | Jan 16 | 201 |
| 1952-53 | 0 | 0 | 0 | 0 | | N.D. |
| 1953-54 | 628 | 57 | 0 | 429 | Feb 14 | 82 |
| 1954-55 | 0 | 0 | 0 | 0 | | N.D. |
| 1955-56 | 196 | 34 | 0 | 128 | Jan 26 | 93 |
| 1956-57 | 0 | 0 | 0 | 0 | | N.D. |
| 1957-58 | 5,938 | 227 | 0 | 5,172 | Apr 03 | 284 |
| 1958-59 | 89 | 14 | 0 | 49 | Feb 18 | 18 |
| 1959-60 | 0 | 0 | 0 | 0 | | N.D. |
| 1960-61 | 146 | 11 | 0 | 64 | Nov 26 | 137 |
| 1961-62 | 3,277 | 152 | 0 | 3,106 | Nov 20 | 2,110 |
| 1962-63 | 827 | 95 | 0 | 515 | Feb 09 | 640 |
| 1963-64 | 112 | 19 | 0 | 67 | Jan 22 | 55 |
| 1964-65 | 873 | 69 | 0 | 538 | Apr 09 | 239 |
| 1965-66 | 6,471 | 320 | 0 | 5,864 | Nov 22 | 864 |
| 1966-67 | 13,656 | 958 | 0 | 12,140 | Dec 06 | 2,230 |
| 1967-68 | 2,744 | 62 | 0 | 2,180 | Nov 30 | 125 |
| 1968-69 | 35,110 | 2,610 | 0 | 34,200 | Jan 25 | 5,600 |
| 1969-70 | 4,005 | 27 | 0 | 2,788 | Mar 04 | 62 |
| 1970-71 | 2,181 | 35 | 0 | 1,524 | Dec 21 | 61 |
| 1971-72 | 764 | 15 | 0 | 488 | Dec 24 | 56 |

N.D. Not determined

R.I. Records incomplete

\+ Less than 0.05 acre feet or less than 0.05 cfs, but greater than 0

## RESERVOIRS - YEARLY RESERVOIR OPERATION SUMMARY

## Puddingstone Diversion Dam

| Season | Inflow Annual (AF) | Daily Mean Inflow | | Outflow Annual (AF) | Peak Inflow | |
|---|---|---|---|---|---|---|
| | | Max-Day (CFS) | Min-Day (CFS) | | Date | Q (CFS) |
| 1972-73 | 3,746 | 163 | 0 | 3,321 | Feb 11 | 219 |
| 1973-74 | 1,660 | 75 | 0 | 1,371 | Jan 07 | 110 |
| 1974-75 | 969 | 15 | 0 | 786 | Mar 06 | 46 |
| 1975-76 | 423 | 9 | 0 | 333 | Mar 01 | 16 |
| 1976-77 | 844 | 29 | 0 | 578 | Jan 03 | 57 |
| 1977-78 | R.I. | | | | | N.D. |
| 1978-79 | R.I. | | | | | N.D. |
| 1979-80 | R.I. | | | | | N.D. |
| 1980-81 | 2,025 | 21 | 0 | 1,877 | Jan 29 | 44 |
| 1981-82 | 2,856 | 122 | 0 | 2,831 | Mar 18 | 260 |
| 1982-83 | 18,257 | 705 | 0 | 18,272 | Mar 01 | 1,867 |
| 1983-84 | 3,267 | 54 | 0 | 3,259 | Dec 25 | 84 |
| 1984-85 | 1,353 | 37 | 0 | 1,294 | Dec 18 | 40 |
| 1985-86 | 1,324 | 99 | 0 | 1,201 | Mar 16 | 104 |
| 1986-87 | 686 | 18 | 0 | 702 | Jan 04 | 49 |
| 1987-88 | 927 | 38 | 0 | 823 | Jan 17 | 214 |
| 1988-89 | 1,060 | 76 | 0 | 927 | Feb 04 | 111 |
| 1989-90 | 228 | 48 | 0 | 193 | Feb 17 | 78 |
| 1990-91 | 2,079 | 54 | 0 | 2,024 | Feb 28 | 195 |
| 1991-92 | 3,289 | 163 | 0 | 3,277 | Feb 12 | 264 |
| 1992-93 | 25,714 | 698 | 0 | 25,686 | Jan 18 | 757 |
| 1993-94 | 1,475 | 14 | 0 | 1,488 | Feb 07 | 23 |
| 1994-95 | 11,349 | 211 | 0 | 11,349 | Jan 10 | 252 |
| 1995-96 | 3,045 | 71 | 0 | 3,044 | Feb 20 | 161 |
| 1996-97 | 2,520 | 84 | 0 | 2,480 | Apr 11 | 95 |
| 1997-98 | 13,280 | 557 | 0 | 13,080 | Feb 24 | 730 |
| 1998-99 | 1,750 | 50 | 0 | 1,470 | Apr 07 | 135 |
| 1999-00 | 904 | 56 | 0 | 765 | Jun 15 | 186 |
| 2000-01 | 986 | 35 | 0 | 841 | Mar 02 | 63 |
| 2001-02 | 146 | 19 | 0 | 53 | Jun 10 | 107 |
| 2002-03 | 2,230 | 136 | 0 | 2,030 | Mar 16 | 182 |
| 2003-04 | 1,300 | 48 | 0 | 1,100 | Dec 25 | 240 |
| 2004-05 | 25,880 | 1,440 | 0 | 25,700 | Jan 09 | 1,920 |
| 2005-06 | 4,320 | 129 | 0 | 4,230 | Apr 04 | 193 |
| 2006-07 | 442 | 8 | 0 | 387 | Jan 23 | 10 |
| 2007-08 | 4,180 | 162 | 0 | 4,060 | Jan 05 | 350 |
| 2008-09 | 1,210 | 29 | 0 | 1,200 | Dec 15 | 69 |

N.D. Not determined

R.I. Records incomplete

\+ Less than 0.05 acre feet or less than 0.05 cfs, but greater than 0

## RESERVOIRS - YEARLY RESERVOIR OPERATION SUMMARY

## Puddingstone Diversion Dam

| Season | Inflow Annual (AF) | Daily Mean Inflow | | Outflow Annual (AF) | Peak Inflow | |
|---|---|---|---|---|---|---|
| | | Max-Day (CFS) | Min-Day (CFS) | | Date | Q (CFS) |
| 2009-10 | 2,390 | 64 | 0 | 2,330 | May 07 | 93 |
| 2010-11 | 8,160 | 350 | 0 | 8,160 | Dec 22 | 584 |
| 2011-12 | 443 | 9.5 | 0 | 455 | Apr 30 | 71 |
| 2012-13 | 133 | 7.7 | 0 | 118 | Apr 09 | 21 |
| 2013-14 | 153 | 31 | 0 | 36 | Jul 03 | 142 |
| 2014-15 | 132 | 12 | 0 | 115 | May 07 | 16 |
| 2015-16 | 135 | 11 | 0 | 129 | May 04 | 16 |
| 2016-17 | 2,380 | 187 | 0 | 2,130 | May 08 | 397 |
| 2017-18 | 118 | 36 | 0.0 | 71 | May 03 | 260 |
| 2018-19 | 4,070 | 167 | 0.0 | 3,920 | Jan 17 | 397 |
| 2019-20 | 1,520 | 30 | 0.0 | 1,010 | Mar 25 | 154 |

N.D. Not determined

R.I. Records incomplete

\+ Less than 0.05 acre feet or less than 0.05 cfs, but greater than 0

## RESERVOIRS - YEARLY RESERVOIR OPERATION SUMMARY

### San Dimas Dam

| Season | Inflow Annual (AF) | Daily Mean Inflow | | Outflow Annual (AF) | Peak Inflow | |
|---|---|---|---|---|---|---|
| | | Max-Day (CFS) | Min-Day (CFS) | | Date | Q (CFS) |
| 1928-29 | N.D. | N.D. | 0 | N.D. | | N.D. |
| 1929-30 | 591 | 28 | 0 | 573 | | N.D. |
| 1930-31 | 585 | 23 | 0 | 466 | | N.D. |
| 1931-32 | 2,502 | 162 | 0 | 2,496 | | N.D. |
| 1932-33 | 652 | 50 | 0 | 648 | | N.D. |
| 1933-34 | 1,351 | 229 | 0 | 1,357 | Jan 01 | 422 |
| 1934-35 | 1,753 | 60 | 0 | 1,682 | Apr 08 | 145 |
| 1935-36 | 1,094 | 35 | 0 | 1,136 | Feb 11 | 155 |
| 1936-37 | 6,316 | 154 | 0 | 6,126 | Feb 06 | 296 |
| 1937-38 | 12,492 | 1,600 | 0.4 | 12,494 | Mar 02 | 4,920 |
| 1938-39 | 2,165 | 43 | 0.2 | 2,024 | Jan 05 | 80 |
| 1939-40 | 1,532 | 60 | 0 | 1,600 | Jan 08 | 302 |
| 1940-41 | 9,645 | 131 | 0.1 | 9,240 | Mar 04 | 235 |
| 1941-42 | 1,603 | 16 | 0.2 | 1,855 | Dec 10 | 29 |
| 1942-43 | 9,271 | 573 | 0.5 | 9,095 | Jan 23 | 1,700 |
| 1943-44 | 5,348 | 398 | 0.1 | 5,423 | Feb 22 | 785 |
| 1944-45 | 3,747 | 97 | 0.9 | 3,811 | Nov 11 | 375 |
| 1945-46 | 2,560 | 149 | 0.1 | 2,368 | Dec 23 | 519 |
| 1946-47 | 2,705 | 100 | 0.1 | 2,982 | Nov 20 | 340 |
| 1947-48 | 720 | 10 | 0 | 706 | Feb 05 | 15 |
| 1948-49 | 728 | 11 | 0.1 | 694 | Jan 20 | 19 |
| 1949-50 | 734 | 25 | 0.1 | 750 | Dec 18 | 65 |
| 1950-51 | 300 | 5 | 0.1 | 301 | Apr 29 | 16 |
| 1951-52 | 4,864 | 208 | 0.1 | 4,593 | Jan 16 | 453 |
| 1952-53 | 822 | 10 | 0.1 | 1,092 | Dec 01 | 25 |
| 1953-54 | 1,514 | 97 | 0.1 | 1,501 | Jan 25 | 327 |
| 1954-55 | 561 | 11 | 0.1 | 526 | Jan 18 | 27 |
| 1955-56 | 736 | 98 | 0.1 | 767 | Jan 26 | 362 |
| 1956-57 | 452 | 12 | 0.1 | 433 | Jan 13 | 41 |
| 1957-58 | 6,786 | 299 | 0 | 6,503 | Apr 03 | 753 |
| 1958-59 | 931 | 37 | 0.1 | 1,239 | Feb 16 | 189 |
| 1959-60 | 408 | 7 | 0.1 | 455 | Feb 08 | 11 |
| 1960-61 | 468 | 31 | 0.1 | 250 | Nov 05 | 397 |
| 1961-62 | 3,206 | 224 | + | 2,664 | Nov 20 | 2,520 |
| 1962-63 | 1,001 | 81 | 0.1 | 1,108 | Feb 09 | 440 |
| 1963-64 | 680 | 20 | 0.1 | 711 | Jan 22 | 121 |
| 1964-65 | 1,118 | 53 | 0 | 1,175 | Apr 09 | 232 |

N.D. Not determined

R.I. Records incomplete

\+ Less than 0.05 acre feet or less than 0.05 cfs, but greater than 0

## RESERVOIRS - YEARLY RESERVOIR OPERATION SUMMARY

### San Dimas Dam

| Season | Inflow Annual (AF) | Daily Mean Inflow | | Outflow Annual (AF) | Peak Inflow | |
|---|---|---|---|---|---|---|
| | | Max-Day (CFS) | Min-Day (CFS) | | Date | Q (CFS) |
| 1965-66 | 6,494 | 305 | 0.2 | 6,326 | Dec 29 | 1,010 |
| 1966-67 | 12,352 | 674 | 0 | 11,598 | Dec 06 | 1,720 |
| 1967-68 | 3,148 | 80 | 0.1 | 3,058 | Nov 19 | 414 |
| 1968-69 | 28,645 | 1,710 | 0.7 | 28,808 | Jan 25 | 3,620 |
| 1969-70 | 4,314 | 71 | 0.7 | 4,736 | Mar 01 | 114 |
| 1970-71 | 2,465 | 70 | 0.5 | 2,125 | Nov 29 | 127 |
| 1971-72 | 1,040 | 33 | 0.2 | 1,217 | Dec 24 | 77 |
| 1972-73 | 4,252 | 346 | 0.7 | 4,000 | Feb 11 | 685 |
| 1973-74 | 2,447 | 121 | 0.3 | 2,389 | Jan 07 | 185 |
| 1974-75 | 1,487 | 28 | 0.1 | 1,566 | Mar 06 | 67 |
| 1975-76 | 1,002 | 52 | 0.1 | 926 | Sep 10 | 443 |
| 1976-77 | 1,094 | 41 | 0 | 1,146 | Jan 03 | 260 |
| 1977-78 | R.I. | | | | | |
| 1978-79 | R.I. | | | | | |
| 1979-80 | 19,951 | 673 | 2.3 | 18,715 | Feb 16 | 2,549 |
| 1980-81 | 3,016 | 37 | 0.8 | 3,216 | Jan 29 | 147 |
| 1981-82 | 3,848 | 161 | 0.2 | 3,700 | Mar 17 | 295 |
| 1982-83 | 17,632 | 527 | 0 | 17,381 | Mar 01 | 1,559 |
| 1983-84 | 3,816 | 55 | 0 | 4,330 | Dec 25 | 115 |
| 1984-85 | 2,554 | 45 | 0.6 | 2,560 | Dec 19 | 67 |
| 1985-86 | 2,401 | 55 | 0 | 2,415 | Mar 16 | 89 |
| 1986-87 | N.D. | 10 | 0.1 | N.D. | Jan 05 | 13 |
| 1987-88 | 1,821 | 54 | 0 | 1,216 | Jan 17 | 157 |
| 1988-89 | 1,122 | 35 | 0 | 1,225 | Feb 04 | 96 |
| 1989-90 | 731 | 28 | 0 | 462 | Feb 17 | 93 |
| 1990-91 | 1,967 | 112 | 0 | 2,361 | Mar 27 | 236 |
| 1991-92 | 4,037 | 143 | 0 | 3,938 | Feb 12 | 403 |
| 1992-93 | 24,941 | 651 | 0 | 24,446 | Jan 14 | 945 |
| 1993-94 | 2,295 | 17 | 0.2 | 2,424 | Feb 07 | 31 |
| 1994-95 | 10,102 | 177 | 0.8 | 9,801 | Jan 10 | 363 |
| 1995-96 | 4,036 | 149 | 0.2 | 4,097 | Feb 20 | 418 |
| 1996-97 | 13,175 | 81 | 0 | 2,988 | | N.D. |
| 1997-98 | 12,122 | 396 | 0.3 | 11,948 | Feb 23 | 1,194 |
| 1998-99 | | | | | | N.D. |
| 1999-00 | 1,400 | 26 | 0 | 1,400 | Feb 18 | 290 |
| 2000-01 | 1,610 | 55 | 0 | 1,570 | Feb 13 | 80 |
| 2001-02 | 519 | 7 | 0 | 465 | Jan 28 | 26 |

N.D. Not determined

R.I. Records incomplete

\+ Less than 0.05 acre feet or less than 0.05 cfs, but greater than 0

## RESERVOIRS - YEARLY RESERVOIR OPERATION SUMMARY

### San Dimas Dam

| Season | Inflow Annual (AF) | Daily Mean Inflow | | Outflow Annual (AF) | Peak Inflow | |
|---|---|---|---|---|---|---|
| | | Max-Day (CFS) | Min-Day (CFS) | | Date | Q (CFS) |
| 2002-03 | 3,180 | 174 | 0 | 2,370 | Feb 13 | 1,240 |
| 2003-04 | 1,890 | 190 | 0 | 1,610 | Dec 25 | 1,560 |
| 2004-05 | 24,650 | 1,160 | 0 | 23,740 | Jan 09 | 1,680 |
| 2005-06 | 6,110 | 162 | 0 | 5,270 | Apr 05 | 257 |
| 2006-07 | 1,730 | 10 | 0 | 1,560 | Feb 27 | 14 |
| 2007-08 | 4,670 | 98 | 0 | 5,380 | Apr 21 | 107 |
| 2008-09 | 4,270 | 60 | 1 | 4,130 | Feb 07 | 83 |
| 2009-10 | 4,950 | 70 | 0 | 5,710 | Jan 21 | 145 |
| 2010-11 | 9,150 | 228 | 0.6 | 8,630 | Dec 22 | 392 |
| 2011-12 | 1,550 | 15 | 0 | 1,510 | Apr 09 | 30 |
| 2012-13 | 753 | 6 | 0 | 658 | Dec 26 | 78 |
| 2013-14 | 515 | 14 | 0 | 486 | Feb 28 | 25 |
| 2014-15 | 378 | 5.2 | 0 | 350 | Dec 12 | 10 |
| 2015-16 | 472 | 18 | 0 | 475 | Jan 06 | 95 |
| 2016-17 | 2,060 | 146 | 0 | 1,870 | Jan 23 | 340 |
| 2017-18 | 216 | 8 | 0.0 | 295 | Mar 15 | 15 |
| 2018-19 | 4,780 | 187 | 0.0 | 4,780 | Feb 14 | 528 |
| 2019-20 | 1,840 | 43 | 0.0 | 1,710 | Dec 26 | 89 |

N.D. Not determined

R.I. Records incomplete

\+ Less than 0.05 acre feet or less than 0.05 cfs, but greater than 0

## RESERVOIRS - YEARLY RESERVOIR OPERATION SUMMARY

## San Gabriel Dam

| Season | Inflow Annual (AF) | Daily Mean Inflow | | Outflow Annual (AF) | Peak Inflow | |
|---|---|---|---|---|---|---|
| | | Max-Day (CFS) | Min-Day (CFS) | | Date | Q (CFS) |
| 1937-38 | 339,155 | 30,720 | 37 | 332,893 | Mar 02 | 89,320 |
| 1938-39 | 67,231 | 1,330 | 23 | 61,655 | Dec 19 | 2,780 |
| 1939-40 | 58,554 | 757 | 18 | 63,386 | Jan 08 | 2,270 |
| 1940-41 | 306,801 | 3,940 | 20 | 305,515 | Feb 20 | 5,780 |
| 1941-42 | 50,285 | 297 | 20 | 49,759 | Dec 29 | 468 |
| 1942-43 | 271,286 | 17,180 | 20 | 267,085 | Jan 23 | 46,000 |
| 1943-44 | 184,923 | 5,710 | 43 | 184,622 | Feb 22 | 9,860 |
| 1944-45 | 91,961 | 1,300 | 28 | 90,131 | Nov 11 | 6,440 |
| 1945-46 | 99,531 | 2,980 | 28 | 89,502 | Dec 21 | 5,760 |
| 1946-47 | 107,688 | 3,340 | 18 | 104,088 | Dec 26 | 6,520 |
| 1947-48 | 29,259 | 257 | 9.9 | 37,794 | Apr 29 | 506 |
| 1948-49 | 24,728 | 94 | 11 | 21,546 | Jan 20 | 120 |
| 1949-50 | 27,797 | 266 | 9.5 | 27,736 | Dec 19 | 448 |
| 1950-51 | 10,169 | 54 | 3 | 13,002 | Jan 11 | 174 |
| 1951-52 | 159,048 | 3,340 | 3.9 | 118,918 | Jan 16 | 6,130 |
| 1952-53 | 41,270 | 375 | 7.5 | 77,961 | Dec 01 | 544 |
| 1953-54 | 60,515 | 1,280 | 8.3 | 56,517 | Jan 25 | 2,940 |
| 1954-55 | 39,159 | 171 | 18 | 37,304 | Apr 30 | 313 |
| 1955-56 | 35,215 | 950 | 14 | 38,127 | Jan 26 | 2,250 |
| 1956-57 | 37,210 | 1,090 | 15 | 35,069 | Jan 13 | 2,850 |
| 1957-58 | 230,745 | 4,270 | 21 | 229,610 | Apr 03 | 6,900 |
| 1958-59 | 43,762 | 1,030 | 14 | 43,100 | Jan 06 | 3,080 |
| 1959-60 | 19,474 | 112 | 5 | 19,258 | Apr 28 | 168 |
| 1960-61 | 12,041 | 122 | 2.2 | 12,698 | Nov 05 | 634 |
| 1961-62 | 116,890 | 6,350 | 3.4 | 112,380 | Feb 11 | 13,960 |
| 1962-63 | 25,930 | 512 | 6.2 | 24,587 | Feb 09 | 2,440 |
| 1963-64 | 24,009 | 287 | 5.2 | 22,601 | Apr 01 | 504 |
| 1964-65 | 36,281 | 396 | 5.5 | 34,427 | Apr 09 | 1,070 |
| 1965-66 | 220,689 | 9,030 | 12 | 217,503 | Dec 29 | 27,180 |
| 1966-67 | 224,903 | 6,700 | 30 | 224,538 | Dec 06 | 12,420 |
| 1967-68 | 66,761 | 697 | 26 | 68,771 | Nov 19 | 1,620 |
| 1968-69 | 527,883 | 28,020 | 24 | 524,874 | Jan 25 | 44,400 |
| 1969-70 | 66,842 | 1,250 | 26 | 66,688 | Feb 28 | 2,550 |
| 1970-71 | 60,375 | 2,120 | 29 | 55,358 | Nov 29 | 6,400 |
| 1971-72 | 34,908 | 975 | 14 | 38,192 | Dec 25 | 1,390 |
| 1972-73 | 124,722 | 5,075 | 14.1 | 124,333 | Feb 11 | 17,430 |
| 1973-74 | 72,959 | 1,140 | 32 | 67,194 | Jan 07 | 1,820 |

N.D. Not determined

R.I. Records incomplete

\+ Less than 0.05 acre feet or less than 0.05 cfs, but greater than 0

## RESERVOIRS - YEARLY RESERVOIR OPERATION SUMMARY

### San Gabriel Dam

| Season | Inflow Annual (AF) | Daily Mean Inflow | | Outflow Annual (AF) | Peak Inflow | |
|---|---|---|---|---|---|---|
| | | Max-Day (CFS) | Min-Day (CFS) | | Date | Q (CFS) |
| 1974-75 | 47,681 | 423 | 27 | 46,194 | Mar 06 | 880 |
| 1975-76 | 38,598 | 978 | 18 | 33,781 | Sep 11 | 1,630 |
| 1976-77 | 36,322 | 407 | 15 | 34,846 | Jan 03 | 1,137 |
| 1977-78 | 486,296 | 13,437 | 14.9 | 483,712 | Mar 04 | 31,730 |
| 1978-79 | 158,043 | 1,647 | 42.9 | 163,511 | Mar 28 | 1,965 |
| 1979-80 | 346,155 | 11,476 | 42.5 | 344,454 | Feb 16 | 24,540 |
| 1980-81 | 42,882 | 281 | 15 | 40,116 | Jan 29 | 784 |
| 1981-82 | 95,225 | 1,591 | 19 | 79,833 | Mar 17 | 2,869 |
| 1982-83 | 404,332 | 14,585 | 33 | 402,734 | Mar 01 | 17,080 |
| 1983-84 | 61,069 | 983 | 13 | 75,284 | Dec 25 | 1,568 |
| 1984-85 | 46,633 | 617 | 8.5 | 46,101 | Dec 19 | 742 |
| 1985-86 | 103,558 | 1,252 | 14 | 100,926 | Jan 30 | 1,911 |
| 1986-87 | 22,847 | 149 | 3 | 22,919 | Jan 05 | 259 |
| 1987-88 | 66,101 | 574 | 3.8 | 49,337 | Feb 01 | 814 |
| 1988-89 | 33,435 | 273 | 4 | 47,683 | Dec 16 | 496 |
| 1989-90 | 18,979 | 248 | 2.3 | 17,008 | Feb 18 | 388 |
| 1990-91 | 61,479 | 1,575 | 3.3 | 39,454 | Mar 01 | 4,294 |
| 1991-92 | 171,617 | 5,796 | 0 | 193,158 | Feb 12 | 11,426 |
| 1992-93 | 445,072 | 10,181 | 0 | 429,615 | Feb 19 | 12,934 |
| 1993-94 | 44,269 | 312 | 0.6 | 50,441 | Feb 08 | 433 |
| 1994-95 | 248,268 | 3,811 | 12.8 | 242,886 | Jan 10 | 6,996 |
| 1995-96 | 72,722 | 2,995 | 2 | 70,533 | Feb 21 | 3,822 |
| 1996-97 | 66,570 | 946 | 3.6 | 65,430 | Dec 22 | 1,200 |
| 1997-98 | 279,200 | 8,840 | 7.1 | 243,100 | Feb 24 | 22,200 |
| 1998-99 | 108,000 | 1,320 | 14 | 82,660 | Feb 25 | 17,800 |
| 1999-00 | 50,790 | 932 | 15.5 | 43,530 | Feb 20 | 3,820 |
| 2000-01 | 59,390 | 721 | 13.7 | 59,740 | Feb 13 | 1,360 |
| 2001-02 | 13,590 | 92 | 0 | 16,810 | Jan 28 | 130 |
| 2002-03 | 55,900 | 1,140 | 0 | 48,710 | Feb 13 | 2,170 |
| 2003-04 | 34,700 | 859 | 0 | 43,970 | Feb 26 | 1,220 |
| 2004-05 | 541,000 | 19,600 | 11.5 | 534,000 | Jan 11 | 24,700 |
| 2005-06 | 116,700 | 1,540 | 32 | 126,400 | Apr 05 | 1,700 |
| 2006-07 | 17,370 | 53 | 0 | 17,480 | Feb 27 | 56 |
| 2007-08 | 103,000 | 2,730 | 0 | 77,270 | Feb 05 | 4,110 |
| 2008-09 | 53,010 | 488 | 1 | 45,650 | Feb 06 | 653 |
| 2009-10 | 117,300 | 1,300 | 11.5 | 110,300 | Feb 07 | 3,080 |
| 2010-11 | 208,600 | 5,870 | 54 | 199,000 | Dec 20 | 10,700 |

N.D. Not determined

R.I. Records incomplete

\+ Less than 0.05 acre feet or less than 0.05 cfs, but greater than 0

## RESERVOIRS - YEARLY RESERVOIR OPERATION SUMMARY

### San Gabriel Dam

| Season | Inflow Annual (AF) | Daily Mean Inflow | | Outflow Annual (AF) | Peak Inflow | |
|---|---|---|---|---|---|---|
| | | Max-Day (CFS) | Min-Day (CFS) | | Date | Q (CFS) |
| 2011-12 | 43,430 | 200 | 16 | 56,060 | Mar 17 | 625 |
| 2012-13 | 15,040 | 168 | 0.02 | 12,690 | Dec 27 | 403 |
| 2013-14 | 16,830 | 904 | 3 | 22,480 | Feb 28 | 2,170 |
| 2014-15 | 19,050 | 197 | 3.7 | 11,060 | Sep 09 | 507 |
| 2015-16 | 20,010 | 308 | 0 | 18,700 | Jan 31 | 657 |
| 2016-17 | 79,960 | 1,710 | 7 | 63,290 | Feb 17 | 2,750 |
| 2017-18 | 26,440 | 312 | 0.0 | 20,821 | Jan 09 | 451 |
| 2018-19 | 145,000 | 3,440 | 7.5 | 134,290 | Feb 14 | 7,540 |
| 2019-20 | 74,380 | 839 | 1.0 | 81,690 | Apr 06 | 1,490 |

N.D. Not determined

R.I. Records incomplete

\+ Less than 0.05 acre feet or less than 0.05 cfs, but greater than 0

## RESERVOIRS - YEARLY RESERVOIR OPERATION SUMMARY

### Santa Anita Dam

| Season | Inflow Annual (AF) | Daily Mean Inflow | | Outflow Annual (AF) | Peak Inflow | |
|---|---|---|---|---|---|---|
| | | Max-Day (CFS) | Min-Day (CFS) | | Date | Q (CFS) |
| 1926-27 | 1,208 | 13 | 0.4 | 1,030 | | N.D. |
| 1927-28 | 1,009 | 22 | 0.1 | 1,162 | | N.D. |
| 1928-29 | 1,214 | 30 | 0 | 1,256 | | N.D. |
| 1929-30 | 1,276 | 25 | 0.1 | 964 | | N.D. |
| 1930-31 | 989 | 34 | 0 | 1,155 | | N.D. |
| 1931-32 | 4,010 | 236 | 0.1 | 3,883 | | N.D. |
| 1932-33 | 2,190 | 152 | 0 | 2,022 | Jan 19 | 390 |
| 1933-34 | 2,603 | 322 | 0 | 2,622 | Jan 01 | 800 |
| 1934-35 | 3,693 | 92 | 0.1 | 3,585 | Apr 08 | 449 |
| 1935-36 | 2,480 | 84 | 0 | 2,535 | Feb 12 | 228 |
| 1936-37 | 8,798 | 192 | 0 | 8,616 | Feb 06 | 313 |
| 1937-38 | 16,594 | 1,780 | 1.3 | 16,689 | Mar 02 | 5,140 |
| 1938-39 | 2,726 | 74 | 0.4 | 2,461 | Dec 19 | 159 |
| 1939-40 | 2,743 | 62 | 0.4 | 2,664 | Jan 08 | 378 |
| 1940-41 | 15,225 | 239 | 0.4 | 15,235 | Mar 04 | 300 |
| 1941-42 | 2,070 | 25 | 0.6 | 2,140 | Dec 29 | 53 |
| 1942-43 | 19,371 | 1,110 | 0.6 | 19,440 | Jan 23 | 3,100 |
| 1943-44 | 7,463 | 514 | 1.3 | 7,294 | Feb 22 | 813 |
| 1944-45 | 4,147 | 101 | 1.1 | 4,133 | Nov 11 | 303 |
| 1945-46 | 3,426 | 164 | 0.8 | 3,360 | Dec 23 | 492 |
| 1946-47 | 4,489 | 122 | 0.7 | 4,462 | Nov 20 | 382 |
| 1947-48 | 1,075 | 14 | 0.3 | 1,243 | Apr 28 | 41 |
| 1948-49 | 1,031 | 17 | 0.2 | 983 | Jan 20 | 32 |
| 1949-50 | 1,357 | 30 | 0.2 | 1,311 | Dec 18 | 115 |
| 1950-51 | 460 | 5 | 0.1 | 497 | Jan 11 | 10 |
| 1951-52 | 8,408 | 351 | 0.1 | 8,292 | Jan 16 | 837 |
| 1952-53 | 1,562 | 20 | 0.5 | 1,729 | Dec 01 | 153 |
| 1953-54 | 3,302 | 201 | 0.4 | 3,412 | Jan 24 | 1,240 |
| 1954-55 | 1,432 | 18 | 0.3 | 1,437 | Nov 11 | 173 |
| 1955-56 | 2,218 | 175 | 0.3 | 2,196 | Jan 26 | 569 |
| 1956-57 | 1,535 | 36 | 0.5 | 1,431 | Feb 23 | 122 |
| 1957-58 | 11,696 | 298 | 0.7 | 11,715 | Apr 03 | 618 |
| 1958-59 | 2,183 | 66 | 0.6 | 2,033 | Jan 06 | 622 |
| 1959-60 | 954 | 7 | 0.1 | 1,152 | Feb 01 | 16 |
| 1960-61 | 527 | 12 | 0.1 | 407 | Jan 26 | 65 |
| 1961-62 | 6,328 | 682 | 0.1 | 6,242 | Feb 11 | 1,460 |
| 1962-63 | 1,628 | 56 | 0.7 | 1,848 | Feb 09 | 368 |

N.D. Not determined

R.I. Records incomplete

\+ Less than 0.05 acre feet or less than 0.05 cfs, but greater than 0

## RESERVOIRS - YEARLY RESERVOIR OPERATION SUMMARY

### Santa Anita Dam

| Season | Inflow Annual (AF) | Daily Mean Inflow | | Outflow Annual (AF) | Peak Inflow | |
|---|---|---|---|---|---|---|
| | | Max-Day (CFS) | Min-Day (CFS) | | Date | Q (CFS) |
| 1963-64 | 1,219 | 32 | + | 1,144 | Apr 01 | 53 |
| 1964-65 | 2,039 | 50 | 0 | 1,988 | Apr 09 | 130 |
| 1965-66 | 13,102 | 600 | 0.4 | 12,933 | Dec 29 | 1,920 |
| 1966-67 | 16,245 | 645 | 1.5 | 16,261 | Dec 06 | 1,520 |
| 1967-68 | 3,376 | 56 | 0.1 | 3,579 | Nov 19 | 165 |
| 1968-69 | 38,734 | 2,292 | 0.3 | 38,369 | Jan 25 | 5,500 |
| 1969-70 | 2,859 | 85 | 1 | 2,859 | Feb 28 | 208 |
| 1970-71 | 3,211 | 184 | 1 | 3,075 | Nov 29 | 674 |
| 1971-72 | 1,316 | 36 | 0.5 | 1,249 | Dec 24 | 99 |
| 1972-73 | 6,414 | 482 | 0.4 | 6,258 | Feb 11 | 1,350 |
| 1973-74 | 4,660 | 174 | 1.2 | 4,546 | Jan 07 | 280 |
| 1974-75 | 2,347 | 36 | 0.1 | 2,647 | Mar 06 | 54 |
| 1975-76 | 1,580 | 52 | 0.2 | 1,469 | Mar 01 | 101 |
| 1976-77 | 1,320 | 35 | 1 | 1,206 | Jan 03 | 200 |
| 1977-78 | R.I. | | | | | |
| 1978-79 | R.I. | | | | | |
| 1979-80 | R.I. | | | | | |
| 1980-81 | 2,221 | 27 | 0.6 | 2,210 | Jan 29 | 147 |
| 1981-82 | 3,714 | 127 | 0.6 | 3,652 | Mar 17 | 213 |
| 1982-83 | 21,246 | 882 | 0 | 21,325 | Mar 02 | 1,197 |
| 1983-84 | 3,603 | 57 | 0.3 | 3,586 | Dec 25 | 142 |
| 1984-85 | 2,363 | 48 | 0 | 2,272 | Dec 19 | 102 |
| 1985-86 | 4,735 | 77 | 0.4 | 4,612 | Jan 30 | 89 |
| 1986-87 | 1,041 | 8 | 0 | 1,174 | Jan 05 | 11 |
| 1987-88 | 2,490 | 37 | 0.1 | 2,488 | Jan 17 | 87 |
| 1988-89 | 1,729 | 52 | 0 | 1,599 | Feb 04 | 119 |
| 1989-90 | 737 | 30 | 0 | 740 | Feb 17 | 117 |
| 1990-91 | 2,393 | 92 | 0 | 2,323 | Mar 01 | 417 |
| 1991-92 | 9,339 | 390 | 0.2 | 9,292 | Feb 11 | 863 |
| 1992-93 | 23,546 | 558 | 0.2 | 23,581 | Jan 07 | 909 |
| 1993-94 | 1,475 | 15 | 0 | 1,565 | Mar 24 | 19 |
| 1994-95 | 12,439 | 242 | 0.1 | 12,281 | Jan 10 | 587 |
| 1995-96 | 4,494 | 274 | 0.1 | 4,535 | Feb 21 | 481 |
| 1996-97 | 4,480 | 101 | 0 | 4,400 | Dec 22 | 241 |
| 1997-98 | 14,690 | 772 | 0 | 14,540 | Feb 23 | 2,880 |
| 1998-99 | 1,970 | 12 | 0 | 1,190 | Feb 09 | 32 |
| 1999-00 | 2,270 | 57 | 0 | 2,060 | Feb 21 | 180 |

N.D. Not determined

R.I. Records incomplete

\+ Less than 0.05 acre feet or less than 0.05 cfs, but greater than 0

## RESERVOIRS - YEARLY RESERVOIR OPERATION SUMMARY

### Santa Anita Dam

| Season | Inflow Annual (AF) | Daily Mean Inflow | | Outflow Annual (AF) | Peak Inflow | |
|---|---|---|---|---|---|---|
| | | Max-Day (CFS) | Min-Day (CFS) | | Date | Q (CFS) |
| 2000-01 | 2,180 | 49 | 0 | 2,130 | Feb 13 | 96 |
| 2001-02 | 1,600 | 19 | 0 | 1,390 | Jan 28 | 27 |
| 2002-03 | 2,240 | 59 | 0 | 2,310 | Nov 10 | 230 |
| 2003-04 | 1,480 | 78 | 0 | 1,550 | Feb 26 | 309 |
| 2004-05 | 27,000 | 1,320 | 0 | 26,820 | Jan 09 | 1,490 |
| 2005-06 | 4,430 | 109 | 0 | 4,020 | Jan 02 | 474 |
| 2006-07 | 1,300 | 9 | 0 | 1,240 | Feb 15 | 40 |
| 2007-08 | 5,780 | 173 | 0 | 5,680 | Jan 05 | 464 |
| 2008-09 | 3,000 | 37 | 1 | 2,930 | Feb 21 | 143 |
| 2009-10 | 4,630 | 105 | 0 | 4,550 | Feb 06 | 342 |
| 2010-11 | 8,900 | 230 | 1.3 | 8,910 | Dec 20 | 875 |
| 2011-12 | 2,150 | 21 | 0 | 2,140 | Mar 17 | 46 |
| 2012-13 | 701 | 6 | 0 | 560 | Jan 24 | 37 |
| 2013-14 | 335 | 20 | 0 | 445 | Feb 28 | 60 |
| 2014-15 | 439 | 10 | 0 | 448 | Dec 12 | 23 |
| 2015-16 | 592 | 12 | 0 | 505 | Jan 06 | 50 |
| 2016-17 | 2,750 | 69 | 0 | 2,740 | Feb 17 | 202 |
| 2017-18 | 508 | 10 | 0.0 | 672 | Mar 23 | 13 |
| 2018-19 | 5,940 | 163 | 0.0 | 5,730 | Jan 17 | 507 |
| 2019-20 | 3540 e | 71.3e | 0.0 | 3,610 | Apr 06 | 228 e |

*Missing reservoir WSE data 12/25/2019-12/30/2019*

N.D. Not determined

R.I. Records incomplete

\+ Less than 0.05 acre feet or less than 0.05 cfs, but greater than 0

## RESERVOIRS - YEARLY RESERVOIR OPERATION SUMMARY

# Thompson Creek Dam

| Season | Inflow Annual (AF) | Daily Mean Inflow | | Outflow Annual (AF) | Peak Inflow | |
|---|---|---|---|---|---|---|
| | | Max-Day (CFS) | Min-Day (CFS) | | Date | Q (CFS) |
| 1931-32 | 81 | 12 | 0 | 81 | Feb 09 | 91 |
| 1932-33 | 0 | 0 | 0 | 0 | | N.D. |
| 1933-34 | N.D. | N.D. | N.D. | 0 | | N.D. |
| 1934-35 | 1 | N.D. | N.D. | 0 | | N.D. |
| 1935-36 | 1 | N.D. | N.D. | 0 | | N.D. |
| 1936-37 | 274 | 24 | 0 | 0 | | N.D. |
| 1937-38 | 1,099 | 259 | 0 | 1,096 | Mar 02 | 580 |
| 1938-39 | 21 | 1 | 0 | 0 | Jan 30 | 1 |
| 1939-40 | 49 | 5 | 0 | 0 | Jan 07 | 26 |
| 1940-41 | 640 | 46 | 0 | 3 | Mar 04 | 97 |
| 1941-42 | 0 | + | 0 | 0 | Dec 10 | 1 |
| 1942-43 | 767 | 121 | 0 | 334 | Jan 23 | 270 |
| 1943-44 | 286 | 56 | 0 | 0 | Feb 22 | 111 |
| 1944-45 | 149 | 18 | 0 | 0 | Nov 12 | 132 |
| 1945-46 | 148 | 25 | 0 | 0 | Dec 23 | 120 |
| 1946-47 | 88 | 16 | 0 | 0 | Nov 20 | 47 |
| 1947-48 | 0 | 0 | 0 | 0 | | N.D. |
| 1948-49 | 0 | 0 | 0 | 0 | | N.D. |
| 1949-50 | 6 | 2 | 0 | 0 | Dec 19 | 5 |
| 1950-51 | 0 | 0 | 0 | 0 | | N.D. |
| 1951-52 | 314 | 30 | 0 | 34 | Jan 16 | 70 |
| 1952-53 | 12 | 1 | 0 | 0 | Dec 01 | 8 |
| 1953-54 | 194 | 19 | 0 | 0 | Jan 25 | 172 |
| 1954-55 | 4 | 1 | 0 | 0 | Jan 18 | 1 |
| 1955-56 | 58 | 25 | 0 | 0 | Jan 26 | 117 |
| 1956-57 | 4 | 2 | 0 | 0 | Jan 13 | 6 |
| 1957-58 | 389 | 34 | 0 | 219 | Apr 03 | 67 |
| 1958-59 | 6 | 1 | 0 | 0 | Feb 16 | 5 |
| 1959-60 | 2 | 0 | 0 | 0 | Apr 28 | 5 |
| 1960-61 | 5 | 1 | 0 | 0 | Nov 12 | 4 |
| 1961-62 | 101 | 9 | 0 | 0 | Nov 20 | 190 |
| 1962-63 | 88 | 26 | 0 | 17 | Feb 09 | 145 |
| 1963-64 | 23 | 4 | 0 | 0 | Mar 22 | 20 |
| 1964-65 | 26 | 10 | 0 | 0 | Apr 09 | 55 |
| 1965-66 | 258 | 34 | 0 | 0 | Nov 23 | 140 |
| 1966-67 | 842 | 200 | 0 | 305 | Dec 06 | 408 |
| 1967-68 | 167 | 7 | 0 | 0 | Nov 19 | 18 |

N.D. Not determined

R.I. Records incomplete

\+ Less than 0.05 acre feet or less than 0.05 cfs, but greater than 0

## RESERVOIRS - YEARLY RESERVOIR OPERATION SUMMARY

# Thompson Creek Dam

| Season | Inflow Annual (AF) | Daily Mean Inflow | | Outflow Annual (AF) | Peak Inflow | |
|---|---|---|---|---|---|---|
| | | Max-Day (CFS) | Min-Day (CFS) | | Date | Q (CFS) |
| 1968-69 | 2,556 | 279 | 0 | 2,061 | Jan 25 | 574 |
| 1969-70 | 54 | 5 | 0 | 2 | Mar 01 | 13 |
| 1970-71 | 32 | 6 | 0 | 0 | Dec 21 | 12 |
| 1971-72 | 6 | 1 | 0 | 0 | Dec 27 | 3 |
| 1972-73 | 161 | 34 | 0 | 8 | Feb 11 | 58 |
| 1973-74 | 37 | 10 | 0 | 37 | Jan 07 | 29 |
| 1974-75 | 0 | 0 | 0 | 0 | | N.D. |
| 1975-76 | 15 | 4 | 0 | 0 | Feb 01 | 4 |
| 1976-77 | 37 | 7 | 0 | 0 | | N.D. |
| 1977-78 | R.I. | | | | | N.D. |
| 1978-79 | R.I. | | | | | N.D. |
| 1979-80 | R.I. | | | | | N.D. |
| 1980-81 | 0 | 0 | 0 | 0 | | N.D. |
| 1981-82 | 62 | 9 | 0 | 18 | Mar 17 | 40 |
| 1982-83 | 1,118 | 114 | 0 | 583 | Mar 01 | 377 |
| 1983-84 | 70 | 3 | 0 | 11 | Dec 26 | 4 |
| 1984-85 | 0 | 0 | 0 | 0 | | N.D. |
| 1985-86 | 58 | 10 | 0 | 58 | Mar 16 | 27 |
| 1986-87 | 0 | 0 | 0 | 0 | | N.D. |
| 1987-88 | 2 | 0 | 0 | 2 | Jan 17 | 1 |
| 1988-89 | 2 | 0 | 0 | 2 | Feb 04 | 1 |
| 1989-90 | 6 | 1 | 0 | 6 | Feb 17 | 1 |
| 1990-91 | 76 | 17 | 0 | 34 | Mar 27 | 20 |
| 1991-92 | 190 | 16 | 0 | 190 | Mar 23 | 20 |
| 1992-93 | 1,267 | 57 | 0 | 1,202 | Jan 18 | 166 |
| 1993-94 | 0 | 0 | 0 | 0 | Mar 19 | 1 |
| 1994-95 | 330 | 35 | 0 | 330 | Jan 10 | 82 |
| 1995-96 | 392 | 31 | 0 | 392 | Feb 20 | 73 |
| 1996-97 | 48 | 11 | 0 | 50 | | N.D. |
| 1997-98 | 526 | 98 | 0 | 525 | Feb 23 | 299 |
| 1998-99 | | | | | | N.D. |
| 1999-00 | 19 | 0 | 0 | 19 | | N.D. |
| 2000-01 | 4 | 1 | 0 | 4 | Feb 13 | 1 |
| 2001-02 | 25 | 1 | 0 | 24 | Nov 20 | 1 |
| 2002-03 | 71 | 14 | 0 | 71 | Mar 16 | 14 |
| 2003-04 | 217 | 33 | 0 | 51 | Feb 26 | 193 |
| 2004-05 | 1,710 | 85 | 0 | 1,640 | Feb 21 | 137 |

N.D. Not determined

R.I. Records incomplete

\+ Less than 0.05 acre feet or less than 0.05 cfs, but greater than 0

## RESERVOIRS - YEARLY RESERVOIR OPERATION SUMMARY

## Thompson Creek Dam

| Season | Inflow Annual (AF) | Daily Mean Inflow | | Outflow Annual (AF) | Peak Inflow | |
|---|---|---|---|---|---|---|
| | | Max-Day (CFS) | Min-Day (CFS) | | Date | Q (CFS) |
| 2005-06 | 213 | 25 | 0 | 0 | Feb 28 | 79 |
| 2006-07 | 8 | 2 | 0 | 0 | Feb 27 | 10 |
| 2007-08 | 129 | 19 | 0 | 84 | Jan 05 | 148 |
| 2008-09 | 57 | 8 | 0 | 3 | Feb 17 | 29 |
| 2009-10 | 107 | 14 | 0 | 9 | Jan 18 | 77 |
| 2010-11 | 434 | 89 | 0 | 79 | Dec 22 | 275 |
| 2011-12 | 50 | 4 | 0 | 0 | Feb 15 | 50 |
| 2012-13 | 19 | 3 | 0 | 0 | Dec 18 | 40 |
| 2013-14 | 14 | 2.2 | 0 | 0 | Dec 19 | 18 |
| 2014-15 | 48 | 3.8 | 0 | 3.4 | Dec 12 | 30 |
| 2015-16 | 0.08 | 0.04 | 0 | 6 | Jan 06 | 0.5 |
| 2016-17 | 204 | 44 | 0 | 6 | Jan 23 | 97 |
| 2017-18 | "+" | +" | 0.0 | 0 | Jan 09. (Estimated) | "+" |
| 2018-19 | 396 | 60 | 0 | 27 | Feb 14 | 286 |
| 2019-20 | 71 | 5 | 0 | 0 | Nov 28 | 66 |

N.D. Not determined

R.I. Records incomplete

\+ Less than 0.05 acre feet or less than 0.05 cfs, but greater than 0

# APPENDIX F

## HYDROLOGIC REPORT 2019 – 2020

## EROSION CONTROL - LOCATION MAP

# EROSION CONTROL - LOCATION MAP

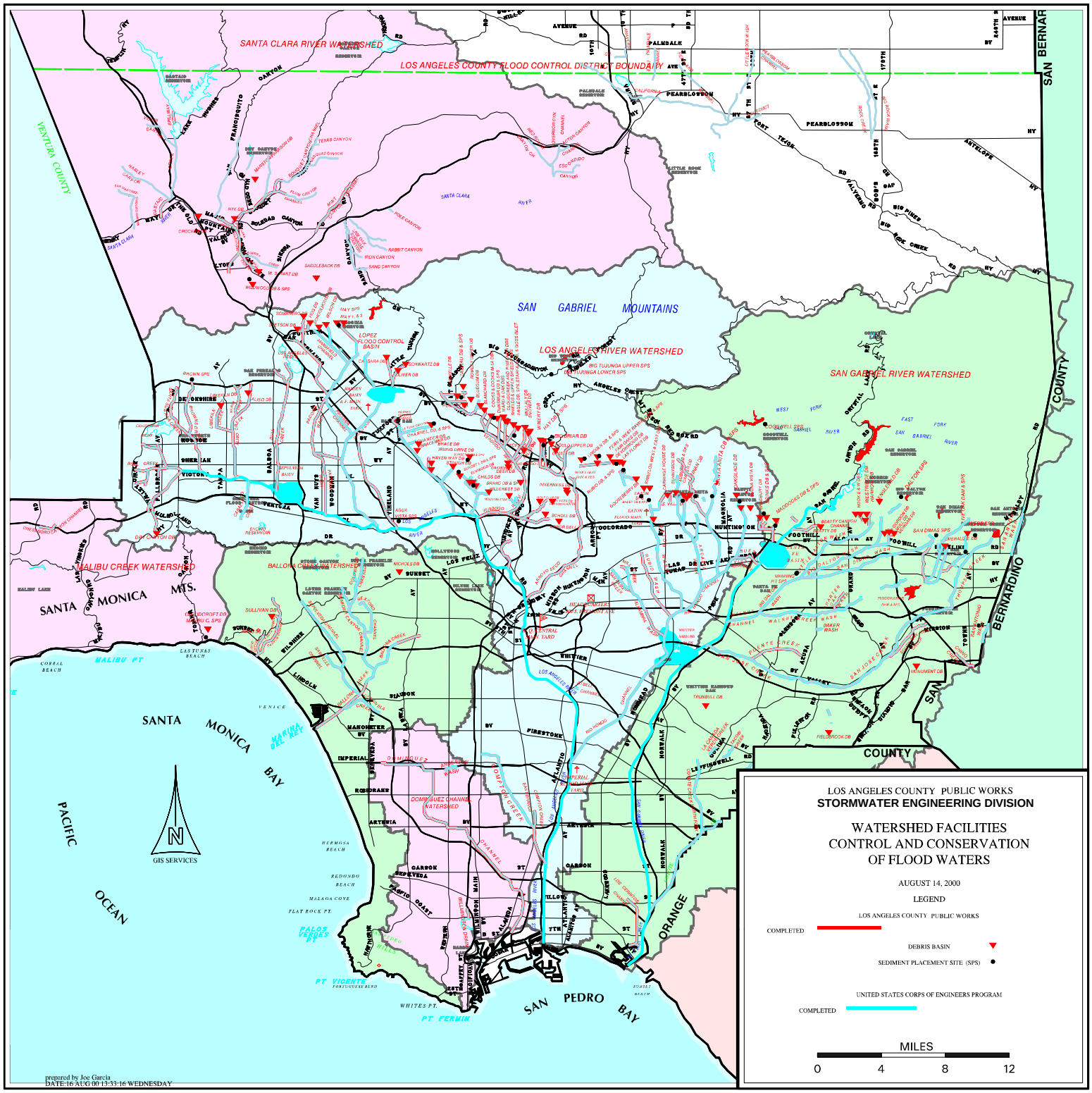

# APPENDIX G

## HYDROLOGIC REPORT 2019 – 2020

**WATER CONSERVATION - SUMMARY - PUBLIC WORKS FACILITIES**

# WATER CONSERVATION - SUMMARY - PUBLIC WORKS FACILITIES

| SPREADING FACILITY | TYPE | SEASON FIRST USED | AREA (ACRES) | | CAPACITIES | | | | LOCATION | WATER SOURCE(S) | REMARKS |
|---|---|---|---|---|---|---|---|---|---|---|---|
| | | | Gross | Wetted | CHANNEL* (cfs) | INTAKE (cfs) | STORAGE (acre*feet) | PERCOLATION** (cfs) | | | |
| BEN LOMOND | Medium Depth Basins | 1958-59 | 24 | 17 | 9,000 | 400 | 168 | 30 | North and south side of San Dimas Wash Channel at southwesterly corner of intersection of Arrow Highway and Barranca Avenue | Covina, Irrigation Commpany, uncontrolled runoff, imported water | Spreading grounds utililized to conserve excess Covina Irrigation Company water released from the Committee of Nine. |
| BIG DALTON | Shallow Basins | 1930-31 | 24 | 2 | 5,000 | 45 | 8 | 15 | Westerly side of Big Dalton Wash, 1/2 mile above Sierra Madre Ave. | | |
| BRANFORD | Deep Basins | 1956-57 | 12.2 | 7 | 1,540 | 1540 | 172 | 2 | Southwesterly of Arleta Ave. above confluence of Tujunga Wash and Pacoima Diversion Channel | Uncontrolled flows from Branford Street drain. | Instream spreading facility. Outlet capacity of 1,540 cfs to Pacoima Diversion Channel |
| BUENA VISTA | Deep Basins | 1954-55 | 10 | 5 | 2,900 | 120 | 170 | 6 | 1 mile easterly of Sawpit Wash. 1/2 mile northerly of Arrow Highway between Meridian St. and Buena Vista Channel | Controlled flows from Santa Fe Dam and uncontrolled flow from Buena Vista Channel. | Instream spreading facility. Total outlet capacity of 270 cfs. |
| CITRUS | Medium Depth Basins | 1960-61 | 19 | 15 | 11,000 | 45 | 82 | 28 | South side of Big Dalton Wash between Citrus and Cerritos Ave. | Controlled flows from Big Dalton Dam and Little Dalton Debris Dams. Uncontrolled flows from Big Dalton Wash. | There are 2 intakes. One is a drop inlet; the other is an air inflated rubber dam. |
| DOMINGUEZ GAP | Deep & Shallow Basins | 1957-58 | 54 | 24 | 146,000 | 20 | 234 | 1 | South of Del Amo Blvd. and bordering the eastern and western sides of the L.A. River. | Controlled flows from the L.A. River low flow channel and uncontrolled flows from storm drains. | East side basin used for flood regulation with some water conservation storage. Intake capacity is 20 cfs for low flow diversion from the L.A. River. The west side basin is fed by a 42-inch siphon from the east side basin. |
| EATON BASIN | Deep Basins | 1956-57 | 16 | 11 | 9,500 | 400 | 284 | 20 | East side of Waton Wash, north of Duarte Rd, 0.6 miles south of Huntington Dr. | Controlled flows from Eaton Wash Dam and uncontrolled flows between dam and spreading basin. | |

Footnotes: * Design capacity of main channel.
** The capacities listed are estimates of infiltration rates. Numbers do not reflect long term spreading operations.

# WATER CONSERVATION - SUMMARY - PUBLIC WORKS FACILITIES

| SPREADING FACILITY | TYPE | SEASON FIRST USED | AREA (ACRES) | | CAPACITIES | | | | LOCATION | WATER SOURCE(S) | REMARKS |
|---|---|---|---|---|---|---|---|---|---|---|---|
| | | | Gross | Wetted | CHANNEL* (cfs) | INTAKE (cfs) | STORAGE (acre*feet) | PERCOLATION** (cfs) | | | |
| EATON WASH | Deep & Shallow Basins | 1947-48 | 25 | 23 | 6,600 | 200 | 577 | 14 | Easterly side of Eaton Wash from below Eaton Dam to Foothill Blvd. | Controlled flows from Eaton Wash Dam. Imported water can be spread in strip basins. | |
| FORBES | Medium Depth Basins | 1964-65 | 21 | 10 | 9,000 | 100 | 87 | 5 | South side of San Dimas Wash between Lone Hill Ave. and Valley Center Ave. | Controlled releases from Puddingstone Diversion Dam and uncontrolled flows from San Dimas Wash; imported water. | |
| HANSEN | Medium Depth | 1944-45 | 156 | 117 | 22,000 | 600 | 1409 | 150 | Northwesterly side of Tujunga Wash from above Glenoaks, Bvd. Southwesterly to San Fernando Rd. | Controlled flows from Hansen Dam and Big Tujunga Dam. | |
| IRWINDALE & MANNING PIT | Deep Basins | 1958-59 | 53 | 30 | 20,000 | 400 | 1,150 | 30 | Northeasterly of intersection of Big Dalton Channel and Irwindale Ave; continues 1,300 feet east of Irwindale Ave. | Controlled flows from Big and Lilttle Dalton Debris Dams and Puddingstone Diversion Dam via Big Dalton Channel; uncontrolled flows; imported releases. | |
| LITTLE DALTON | Shallow Basins | 1931-32 | 14 | 5 | 8,600 | 20 | 25 | 12 | Westerly of Glendora Mt. Rd. from Little Dalton Debris Basin south of East Palm Dr. | Controlled flows from Lilttle Dalton Debris Basin and imported water. (Imported water delivery commenced in October 1995). | |
| LIVE OAK | Shallow Basins | 1961-62 | 5 | 3 | 2,600 | 15 | 13 | 12 | Westerly side of Live Oak Wash. North of Base Line Road (projected). | Controlled flows from Live Oak Dam and Live Oak Debris Basin. Imported water from TVMWD. | |
| LOPEZ | Shallow Basins | 1956-57 | 18 | 12 | 11,000 | 25 | 25 | 15 | Southeasterly side of Pacoima Wash, northeasterly of Foothill Blvd. | Controlled flows from Pacoima Dam and Lopez Flood Control Basin. | |

Footnotes: * Design capacity of main channel.
** The capacities listed are estimates of infiltration rates. Numbers do not reflect long term spreading operations.

# WATER CONSERVATION - SUMMARY - PUBLIC WORKS FACILITIES

| SPREADING FACILITY | TYPE | SEASON FIRST USED | AREA (ACRES) | | CAPACITIES | | | | LOCATION | WATER SOURCE(S) | REMARKS |
|---|---|---|---|---|---|---|---|---|---|---|---|
| | | | Gross | Wetted | CHANNEL* (cfs) | INTAKE (cfs) | STORAGE (acre*feet) | PERCOLATION** (cfs) | | | |
| PACOIMA | Shallow | 1932-33 | 169 | 107 | 17,000 | 600 | 537 | 65 | Both sides of old Pacoima Wash Channel from Arleta Ave. southwesterly to Weoodman Ave. | Controlled flows from Pacoima Dam. Partially controlled flow from Lopez Flood Control basin, uncontrolled flow from East Canyon and Pacoima Wash; imported water. | |
| PECK ROAD | Deep | 1959-60 | 157 | 105 | 30,100 | 30,100 | 3,157 | 25 | Confluence of Sawpit and Santa Anita Washes. | Controlled releases from Santa Anita and Sawpit Debris basins and uncontrolled flows from local runoff via Sawpit and Santa Anita Washes. | Instream spreading facility. |
| RIO HONDO COASTAL | Medium Depth Basins | 1937-38 | 570 | 389 | 40,000 | 1,950 | 3,694 | 400 | Easterly side of Rio Hondo southerly from southern Pacific R.R. (south of Whittier Blvd.) to Slauson Ave.; west side of side of rio Hondo Channel 0.2 miles above whittier Blvd. South to Foster Bridge Blvd. | Controlled releases from San Gabriel Canyon Dams, Sante Fe, and whittier Narrows Dam. Uncontrolled runoff via San Gabriel River, Rio Hondo Channel, and their tributaries. Imported and reclaimed water. | In cooperation with the U.S. Army Corps of Engineers. Public Works operates 1,200 acre*foot pool at Whittier Narrows Dam for retention of storm water. |
| SAN GABRIEL RIVER (MONTEBELLO FOREBAY) | Medium Depth Basins | 1954-55 | 308 | 153 | 20,000 | In-river percolation | 1,012 | 75 | San Gabriel Spreading Grounds headworks to Firestone Ave. only. Storage behind the seven rubber dams intalled at each drop structure | Controlled releases from San Gabriel Canyon Dams, Santa Fe, and Whittier Narrows Dam. Imported and reclaimed water. | |
| SAN GABRIEL RIVER (SAN GABRIEL VALLEY) | Shallow | 1965-66 | 196 | 196 | 41,000 - 98,000 | In-river percolation | N/A | 180 | San Gabriel River from Santa Fe Dam to Whittier Narrows Dam. | Controlled flows from dams in the San Gabriel Canyon, Santa Fe Dam, and uncontrolled valley runoff below Santa fe Dam. Imported Water. | |
| SAN DIMAS CANYON | Shallow | 1965-66 | 22 | 10 | 7,000 | 25 | 30 | 12 | Southeast side of San Dimas Wash between Puddingstone Diversion and San Dimas Canyon Rd. | Controlled releases from Puddingstone Diversion Dam; uncontrolled flows from local storm runoff. | |
| SAN GABRIEL CANYON | Deep | 1917-18 | 165 | 124 | 98,000 | 150 | 8,170 | 50 | Easterly side of San Gabriel River. Below mouth of San Gabriel Canyon. North of the City of Azusa. | San Gabriel River controlled releases from Cogswell Dam, Sann Gabriel Dam, and Morris Dam. Committee of Nine surplus flows and imported water. | There are 2 intakes to this facility. One is fed from surplus Committee of Nine flows. The other is from the San Gabriel River into basin no. 2. |

Footnotes: * Design capacity of main channel.
** The capacities listed are estimates of infiltration rates. Numbers do not reflect long term spreading operations.

# WATER CONSERVATION - SUMMARY - PUBLIC WORKS FACILITIES

| SPREADING FACILITY | TYPE | SEASON FIRST USED | AREA (ACRES) | | CAPACITIES | | | | LOCATION | WATER SOURCE(S) | REMARKS |
|---|---|---|---|---|---|---|---|---|---|---|---|
| | | | Gross | Wetted | CHANNEL* (cfs) | INTAKE (cfs) | STORAGE (acre*feet) | PERCOLATION** (cfs) | | | |
| SAN GABRIEL COASTAL | Medium Depth Basins | 1938-39 | 128 | 96 | 20,000 | 350 | 1,712 | 75 | Westerly side of San Gabriel River, southerly from Whittier Blvd. to Washington Blvd. | Controlled releases from San Gabriel Canyon Dams, Santa Fe, and Whittier Narrows Dam. Imported and reclaimed water. | |
| SANTA ANITA | Shallow | 1944-45 | 15 | 13 | 12,000 | 20 | 50 | 5 | Westerly side of Santa Anita Wash, 1.25 miles above Foothill Blvd. | Controlled flows from Santa Anita Dam and Santa Anita Debris Basin. | Santa Anita Headworks located upstream of the debris basin diverts water to Santa Anita Spreading Grounds and City of Sierra Madre Spreading Grounds. |
| SANTA FE | Shallow | 1953-54 | 338 | 168 | 96,000 | 600 | 635 | 400 | Within Santa Fe Dam reservoir and spillway areas. | Controlled flows from San Gabriel Canyon Reservoirs. Uncontrolled flows from San Gabriel River below Morris Reservoirs; imported water. | New diversion headworks sturcture constructed consisting of a new rubber dam and 2 intake gates. |
| SAWPIT | Shallow | 1946-47 | 13 | 4 | 5,000 | 30 | 13 | 12 | Westerly side of Sawpit Wash below mouth of canyon near Norumbega Drive, Monrovia. | Controlled flows from Sawpit Reservoir and Sawpit Debris Basin. | |
| VALLEY BOULEVARD RUBBER DAM | Shallow | 1994-95 | 60 | 60 | 60,000 | In-river percolation | 900 | 0 | Drop structure south of Valley Blvd. below the confluence of the San Gabriel River and Walnut Creek. | Controlled flows from Big and Lilttle Dalton Debris Dams and Puddingstone Diversion Dam via Big Dalton Channel; uncontrolled flows; imported releases. May also receive releases from San Gabriel Canyon dams and imported water. | |
| WALNUT | Deep | 1962-63 | 16 | 7 | 8,000 | 150 | 199 | 50 | West side of Walnut Wash, north of San Bernardino Freeway. | Controlled flows from Puddingstone Reservoir and uncontrolled flows from Walnut Creek. | |

Footnotes: * Design capacity of main channel.
** The capacities listed are estimates of infiltration rates. Numbers do not reflect long term spreading operations.

# APPENDIX H

## HYDROLOGIC REPORT 2019 – 2020

**WATER CONSERVATION - SUMMARY - OTHER FACILITIES**

# WATER CONSERVATION - SUMMARY - OTHER FACILITIES

| SPREADING FACILITY | TYPE | SEASON FIRST USED | AREA (ACRES) | | CAPACITIES | | | | LOCATION | WATER SOURCE(S) | REMARKS |
|---|---|---|---|---|---|---|---|---|---|---|---|
| | | | Gross | Wetted | CHANNEL* (cfs) | INTAKE (cfs) | STORAGE (acre*feet) | PERCOLATION** (cfs) | | | |
| FISH CANYON (COMMITTEE OF NINE) | Shallow | Circa 1917 | 6 | 4 | N/A | N/A | N/A | 7 | Westerly side of San Gabriel River below mouth of Fish Canyon and north of the City of Azusa | The Committee of Nine | Owned and operated by Cal-American Water Company. Channel, intakes, and storage capacities are not available. |
| SIERRA MADRE (CITY OF SIERRA MADRE) | Shallow | Circa 1933 | 22 | 9 | N/A | 25 | 47 | 15 | City of Sierra Madre, south side of Grandview Avenue, 1/2 mile west of Santa Anita Avenue | Little Santa Anita Creek and street runoff; also controlled flows from Santa Anita Dam. | Public Works diverts water to this facility via pipeline from Santa Anita Headworks. Channel capacity is not applicable. |
| THOMPSON CREEK (POMONA VALLEY PROTECTIVE ASSOCIATION) | Ditches, check basins, and deep basins. | Circa 1928 | 53 | 37 | N/A | 35 | N/A | 15 | Southerly from and adjacent to Thompson Creek Dam, east side of Thompson Creek. | Cobal, Williams, Palmer, and Padua Creeks. Also Thompson Creek when reservoir is above elevation 1,625. | Operated by the Pomona Valley Protective Association. Public Works diverts water to this facility via the Palmer diversion. |
| TUJUNGA (L.A. CITY DEPT. OF WATER & POWER) | Shallow | Circa 1931 | 188 | 83 | 22,000 | 400 | 100 | 120 | San Fernando Valley east side of Tujunga Wash at Roscoe Blvd. | Controlled releases from Big Tujunga Dam, Hansen Dam, and uncontrolled runoff from storm drains. Imported water. | Public Works has an agreement with the City of Los Angeles to operate this facility. |

Footnotes: * Design capacity of main channel.
** The capacities listed are estimates of infiltration rates. Numbers do not reflect long term spreading operations.

# APPENDIX I

## HYDROLOGIC REPORT 2019 – 2020

**WATER CONSERVATION - SUMMARY - WATER CONSERVED**

# WATER CONSERVATION - SUMMARY - WATER CONSERVED

## County of Los Angeles Public Works
## Total Monthly Water Conserved 2019-20
(Acre-Feet)

| AREA | SPREADING FACILITY | OCT | NOV | DEC | JAN | FEB | MAR | APR | MAY | JUN | JUL | AUG | SEP | ACC TOT | Historic Average | Historic High Amount | Historic High Wtr Yr |
|---|---|---|---|---|---|---|---|---|---|---|---|---|---|---|---|---|---|
| San Fernando Valley Facilities | Branford | 4 | 104 | 139 | 10 | 3 | 141 | 94 | 15 | 4 | 4 | 4 | 5 | 527 | 442 | 1,448 | 2004-05 |
| | Hansen | 296 | 0 | 550 | 259 | 170 | 856 | 5,090 | 979 | 316 | 129 | 0 | 0 | 8,645 | 10,558 | 35,221 | 1982-83 |
| | Lopez | 402 | 501 | 724 | 0 | 0 | 2 | 494 | 1 | 0 | 0 | 0 | 0 | 2,124 | 712 | 4,178 | 2016-17 |
| | Pacoima | 2,040 | 1,550 | 1,050 | 0 | 115 | 930 | 2,440 | 348 | 0 | 0 | 172 | 0 | 8,645 | 5,443 | 24,164 | 2010-11 |
| | Pacoima Wash * | 0 | 7 | 14 | 1 | 92 | 63 | 897 | 138 | 0 | 0 | 279 | 0 | 1,491 | - | - | - |
| | Tujunga† | 0 | 0 | 0 | 0 | 0 | 262 | 1,050 | 12 | 0 | 0 | 0 | 0 | 1,324 | 7,506 | 42,817 | 1982-83 |
| | Tujunga Wash * | 306 | 7 | 23 | 1 | 0 | 97 | 2,166 | 981 | 360 | 321 | 281 | 258 | 4,801 | 6,350 | 39,602 | 2004-05 |
| | **SUBTOTAL1** | **3,048** | **2,169** | **2,500** | **271** | **380** | **2,351** | **12,231** | **2,474** | **680** | **454** | **736** | **263** | **27,557** | **31,011** | | |
| San Gabriel Valley Facilities | Ben Lomond | 0 | 649 | 721 | 64 | 0 | 15 | 114 | 0 | 0 | 0 | 4 | 15 | 1,582 | 2,923 | 8,160 | 2004-05 |
| | Big Dalton | 0 | 0 | 0 | 0 | 0 | 0 | 284 | 59 | 13 | 0 | 0 | 0 | 356 | 626 | 3,766 | 1966-67 |
| | Buena Vista | 0 | 0 | 0 | 0 | 0 | 0 | 0 | 0 | 0 | 0 | 0 | 0 | 0 | 508 | 2,731 | 1957-58 |
| | Citrus | 306 | 571 | 426 | 223 | 69 | 177 | 275 | 74 | 74 | 30 | 0 | 1 | 2,226 | 1,089 | 6,478 | 1994-95 |
| | Eaton Basin | 41 | 117 | 271 | 37 | 32 | 245 | 175 | 29 | 17 | 15 | 22 | 22 | 1,023 | 1,058 | 3,481 | 1982-83 |
| | Eaton Grounds | 0 | 0 | 114 | 1 | 3 | 11 | 485 | 0 | 0 | 0 | 0 | 0 | 614 | 900 | 4,761 | 1982-83 |
| | Forbes | 155 | 0 | 89 | 39 | 0 | 5 | 0 | 0 | 0 | 0 | 0 | 0 | 288 | 683 | 2,628 | 1986-87 |
| | Irwindale | 894 | 282 | 528 | 65 | 0 | 184 | 536 | 33 | 479 | 0 | 0 | 5 | 3,006 | 5,312 | 41,280 | 1991-92 |
| | Little Dalton | 222 | 34 | 163 | 15 | 0 | 0 | 51 | 62 | 0 | 0 | 0 | 0 | 547 | 624 | 5,546 | 1995-96 |
| | Live Oak | 264 | 242 | 0 | 0 | 0 | 0 | 58 | 0 | 0 | 0 | 0 | 0 | 564 | 208 | 1,660 | 1982-83 |
| | Peck Road | 678 | 702 | 697 | 497 | 271 | 395 | 786 | 353 | 192 | 1,870 | 463 | 2,050 | 8,954 | 7,461 | 50,026 | 1982-83 |
| | San Dimas Canyon | 0 | 9 | 0 | 0 | 0 | 5 | 41 | 432 | 516 | 12 | 0 | 0 | 1,015 | 1,574 | 6,049 | 1982-83 |
| | San Gabriel Canyon | 1,050 | 1,840 | 1,280 | 972 | 891 | 1,010 | 1,530 | 1,630 | 2,110 | 1,670 | 1,100 | 1,410 | 16,493 | 15,853 | 33,577 | 2002-03 |
| | Santa Anita | 10 | 2 | 51 | 42 | 44 | 121 | 330 | 6 | 0 | 0 | 0 | 0 | 606 | 442 | 1,641 | 1965-66 |
| | Santa Fe SG | 7,990 | 6,290 | 6,960 | 952 | 728 | 0 | 762 | 202 | 6,300 | 802 | 35 | 0 | 31,021 | 27,366 | 124,478 | 1982-83 |
| | Sawpit | 39 | 27 | 19 | 61 | 30 | 20 | 85 | 88 | 76 | 26 | 0 | 0 | 471 | 713 | 2,926 | 1982-83 |
| | Walnut | 102 | 74 | 144 | 139 | 108 | 143 | 246 | 22 | 0 | 0 | 0 | 0 | 978 | 1,222 | 3,261 | 2004-05 |
| | Sierra Madre† | 2 | 7 | 37 | 61 | 3 | 83 | 383 | 170 | 71 | 24 | 18 | 0 | 859 | 1,562 | 5,003 | 1966-67 |
| | Fish Canyon† | 1 | 14 | 0 | 296 | 279 | 368 | 497 | 557 | 490 | 449 | 375 | 77 | 3,403 | 5,411 | 10,948 | 1978-79 |
| | Between San Dimas Dam & S.G | 0 | 0 | 1 | 5 | 14 | 84 | 30 | 356 | 219 | 44 | 14 | 3 | 770 | 530 | 736 | 2016-17 |
| | Between Big Dalton Dam & S.G | 25 | 2 | 20 | 24 | 5 | 56 | 35 | 2 | 41 | 37 | 16 | 0 | 263 | 211 | 535 | 2015-16 |
| S.G. River Perc. Reach from Morris Dam to W.N. Dam | Morris Dam to Sta. F190 | 2,857 | 1,869 | 1,833 | 839 | 888 | 753 | 1,415 | 732 | 2,862 | 3,997 | 978 | 3,813 | 22,836 | 24,452 | 59,594 | 2004-05 |
| | Sta. F190 to Santa Fe Dam O/F | 3,709 | 1,520 | 1,468 | 427 | 218 | 73 | 184 | 43 | 2,066 | 4,459 | 562 | 4,652 | 19,381 | 16,308 | 119,600 | 1977-78 |
| | Santa Fe Dam O/F to Sta. E322 | 1,637 | 264 | 1,479 | 1,107 | 1,516 | 1,585 | 1,748 | 977 | 1,287 | 822 | 233 | 252 | 12,907 | 26,094 | 103,347 | 2004-05 |
| | E322 to F263 | 0 | 752 | 1,002 | 1,676 | 1,728 | 1,054 | 322 | 212 | 505 | 145 | 193 | 331 | 7,920 | 14,028 | 32,747 | 2009-10 |
| | **SUBTOTAL2** | **19,982** | **15,267** | **17,303** | **7,542** | **6,827** | **6,387** | **10,372** | **6,039** | **17,318** | **14,402** | **4,013** | **12,631** | **138,083** | **157,158** | | |
| Coastal Plain Facilities | Rio Hondo Coastal | 0 | 3,430 | 6,790 | 35 | 21 | 5,610 | 5,520 | 107 | 811 | 7,670 | 1,210 | 7,020 | 38,224 | 33,488 | 96,324 | 1982-83 |
| | Whittier Narrows Reservoir | 1,540 | 3,410 | 3,661 | 1,012 | 875 | 3,931 | 2,936 | 761 | 577 | 2,768 | 728 | 4,280 | 26,479 | 27,991 | 102,610 | 1991-92 |
| | San Gabriel Coastal | 457 | 4,500 | 6,250 | 3,070 | 1,910 | 8,950 | 7,290 | 3,140 | 1,090 | 917 | 1,720 | 1,430 | 40,724 | 27,626 | 81,586 | 1992-93 |
| | Dominguez Gap | 6 | 10 | 35 | 22 | 26 | 8 | 26 | 12 | 21 | 32 | 6 | 10 | 214 | 557 | 2,414 | 1961-62 |
| | **SUBTOTAL3** | **2,003** | **11,350** | **16,736** | **4,139** | **2,832** | **18,499** | **15,772** | **4,020** | **2,499** | **11,387** | **3,664** | **12,740** | **105,641** | **89,662** | | |
| **Total Water Conserved** | | **25,033** | **28,786** | **36,539** | **11,952** | **10,039** | **27,237** | **38,375** | **12,533** | **20,497** | **26,243** | **8,413** | **25,634** | **271,281** | **277,831** | | |

**Note:** † : Owned by other entities
E: Estimated
+ : Less than one AF
* : Reach from below Big Tujunga to Hansen Dam

# APPENDIX J

## HYDROLOGIC REPORT 2019 – 2020

**WATER CONSERVATION - SUMMARY - IMPORTED WATER**

# WATER CONSERVATION - SUMMARY - IMPORTED WATER

IMPORTED WATER OUTLET RELEASES: *Water Delivered in Acre-Feet*

| | Metropolitan Water District of Southern California | | | | | | | | SGVMWD | | | | | | | San Fernando Valley | | Waste | MONTHLY |
|---|---|---|---|---|---|---|---|---|---|---|---|---|---|---|---|---|---|---|---|
| | CENB - 48 * | | Thomp. Creek | USG 3 | | | TVMWD | | S.G. Canyon | | Beatty Canyon | Citrus | San Dimas | | | LADPW | Burbank | to the | TOTAL |
| | CENB | MSGB | CENB - 28 * | MSGB/Santa Fe | San. Gab. Cyn. | Co of 9[1] | PM-26 | Live Oak | Basin 1 | MSGB | MSGB | | CENB | MSGB | Forbes | Maclay | B-06 | Ocean | SPREAD |
| **OCT** | 0 | 0 | 0 | 15,723 | 461 | 1,418 | 222 | 264 | 589 | 0 | 0 | 290 | 0 | 709 | 155 | 0 | 2,192 | 0 | 20,605 |
| **NOV** | 0 | 0 | 0 | 9,496.4 | 1,171 | 873 | 33.9 | 242 | 669 | 0 | 0 | 132 | 0 | 896 | 0 | 0 | 1,807.4 | 0 | 14,448 |
| **DEC** | 0 | 0 | 0 | 9,899.2 | 1280 | 851 | 163 | 0 | 0 | 0 | 0 | 0 | 0 | 806 | 89 | 0 | 1,232.9 | 0 | 13,470 |
| **JAN** | 0 | 0 | 0 | 387.7 | 89.9 | 56 | 14.6 | 0 | 0 | 0 | 878 | 0 | 0 | 264 | 39 | 0 | 0 | 0 | 1,673 |
| **FEB** | 0 | 0 | 0 | 0 | 0 | 0 | 0 | 0 | 0 | 0 | 992 | 0 | 0 | 0 | 0 | 0 | 0 | 0 | 992 |
| **MAR** | 0 | 0 | 0 | 0 | 0 | 0 | 0 | 0 | 0 | 0 | 0 | 0 | 0 | 0 | 0 | 0 | 0 | 0 | 0 |
| **APR** | 0 | 0 | 0 | 1433.8 | 0 | 0 | 0 | 0 | 0 | 0 | 0 | 0 | 0 | 0 | 0 | 0 | 0 | 0 | 1,434 |
| **MAY** | 0 | 0 | 0 | 298.4 | 0 | 0 | 0 | 0 | 0 | 0 | 0 | 0 | 0 | 0 | 0 | 0 | 0 | 0 | 298 |
| **JUN** | 0 | 0 | 0 | 0 | 0 | 0 | 0 | 0 | 1,861 | 0 | 0 | 0 | 0 | 478 | 0 | 0 | 0 | 0 | 2,339 |
| **JUL** | 0 | 0 | 0 | 0 | 0 | 0 | 0 | 0 | 1,603 | 0 | 0 | 0 | 0 | 0 | 0 | 0 | 0 | 0 | 1,603 |
| **AUG** | 0 | 0 | 0 | 0 | 0 | 0 | 0 | 0 | 1,030 | 0 | 583 | 0 | 0 | 0 | 0 | 0 | 0 | 0 | 1,613 |
| **SEP** | 0 | 0 | 0 | 0 | 0 | 0 | 0 | 0 | 0 | 0 | 0 | 0 | 0 | 0 | 0 | 0 | 0 | 0 | 0 |
| TOTAL | 0 | 0 | 0 | 37,238.5 | 3,001.9 | 3,198.0 | 433.5 | 506 | 5,752 | 0 | 2,453 | 422 | 0 | 3,153 | 283 | 0 | 5,232.3 | 0 | 58,475.2 |

Notes: [1] Import water utilzed by Committee of Nine not included in total import water spread

# APPENDIX K

## HYDROLOGIC REPORT 2019 – 2020

**WATER CONSERVATION - SUMMARY - RECLAIMED WATER**

# WATER CONSERVATION - SUMMARY - RECLAIMED WATER

**RECLAIMED WATER OUTLET RELEASES**: *Water Delivered in Acre-Feet*

| | WHITTIER NARROWS PLANT | | | | SAN JOSE CREEK PLANT | | | | | | POMONA PLANT | | | | MONTHLY TOTAL WASTED | MONTHLY TOTAL SPREAD |
|---|---|---|---|---|---|---|---|---|---|---|---|---|---|---|---|---|
| | DELIVERED | | Waste to the ocean | MONTHLY SPREAD | DELIVERED | | | | Waste to the ocean | MONTHLY SPREAD | DELIVERED | | Waste to the ocean | MONTHLY SPREAD | | |
| | Rio Hondo | San Gabriel | | | Rio Hondo Tertiary | Rio Hondo Advanced | San Gabriel Tertiary | San Gabriel Advanced | | | Rio Hondo | San Gabriel | | | | |
| **OCT** | 728.4 | 0 | 0 | 728.4 | 1890.5 | 0.0 | 217.9 | 238.5 | 0 | 2,346.9 | 231.6 | 0.0 | 0 | 231.6 | 0 | 3,306.9 |
| **NOV** | 781.4 | 0 | 29.2 | 752.2 | 1195.6 | 0.0 | 2054.1 | 751.6 | 21 | 3,980.3 | 166.7 | 193.3 | 0 | 360.0 | 50 | 5,092.5 |
| **DEC** | 841.6 | 0 | 24.8 | 816.8 | 0.0 | 0.0 | 3966.8 | 746.9 | 209.9 | 4,503.8 | 0.0 | 576.1 | 21.3 | 554.8 | 256 | 5,875.4 |
| **JAN** | 769.3 | 0 | 0.0 | 769.3 | 0.0 | 0.0 | 3638.9 | 871.9 | 0 | 4,510.8 | 0.0 | 468.6 | 0 | 468.6 | 0 | 5,748.7 |
| **FEB** | 727.8 | 0 | 0 | 727.8 | 0.0 | 0.0 | 3110 | 860.2 | 0 | 3,970.2 | 0.0 | 262.0 | 0 | 262.0 | 0 | 4,960.0 |
| **MAR** | 779.8 | 0 | 28.3 | 751.5 | 0.0 | 0.0 | 3695.2 | 891.9 | 0 | 4,587.1 | 0.0 | 465.4 | 0 | 465.4 | 28 | 5,804.0 |
| **APR** | 756.8 | 0.0 | 7 | 749.8 | 0.0 | 0.0 | 3086.2 | 923.5 | 0 | 4,009.7 | 0.0 | 437.6 | 0 | 437.6 | 7 | 5,197.1 |
| **MAY** | 684 | 0.0 | 0 | 684.0 | 0 | 0.0 | 2386.3 | 1,126.3 | 0 | 3,512.6 | 0 | 254.1 | 0 | 254.1 | 0 | 4,450.7 |
| **JUN** | 607.8 | 0.0 | 0 | 607.8 | 433.7 | 377.1 | 1902.6 | 619.2 | 0 | 3,332.6 | 0 | 153.1 | 0 | 153.1 | 0 | 4,093.5 |
| **JUL** | 631 | 0.0 | 0 | 631.0 | 892 | 524.0 | 1161.6 | 439.0 | 0 | 3,016.6 | 0 | 87.9 | 0 | 87.9 | 0 | 3,735.5 |
| **AUG** | 380.2 | 193.0 | 0 | 573.2 | 419.3 | 121.9 | 1083.9 | 640.3 | 0 | 2,265.4 | 0 | 71.4 | 0 | 71.4 | 0 | 2,910.0 |
| **SEP** | 214.3 | 331.6 | 0 | 545.9 | 597.1 | 374.3 | 750.1 | 675.1 | 0 | 2,396.6 | 0 | 123.8 | 0 | 123.8 | 0 | 3,066.3 |
| **TOTAL** | **7,902.4** | **524.6** | **89.3** | **8,337.7** | **5,428.2** | **1,397.3** | **27,053.6** | **8,784.4** | **230.9** | **42,432.6** | **398.3** | **3,093.3** | **21.3** | **3,470.3** | **341.5** | **54,240.6** |

# APPENDIX L

## HYDROLOGIC REPORT 2019 – 2020

**WATER CONSERVATION - SUMMARY - GROUND WATER**

# WATER CONSERVATION – WELL MEASUREMENT – GROUND WATER

**Reading for well No.** 460K
**State Well No.** 4S12W28H09
**Latitude:** 33-47-51 **Longitude:** 118-08-17 **Thomas Guide Page:** 796 A3

| WS_ELEV 1995-96 | |
|---|---|
| 10/13/1995 | -31.60 |
| 11/18/1995 | -19.40 |
| 12/18/1995 | -25.40 |
| 1/22/1996 | -18.60 |
| 2/21/1996 | -10.30 |
| 3/20/1996 | -11.60 |
| 4/22/1996 | -5.80 |
| 5/23/1996 | -37.40 |
| 6/21/1996 | -51.80 |
| 7/22/1996 | -62.60 |
| 8/23/1996 | -64.80 |
| 9/23/1996 | -78.90 |

| WS_ELEV 1996-97 | |
|---|---|
| 10/23/1996 | -70.40 |
| 11/23/1996 | -70.40 |
| 12/23/1996 | -70.40 |
| 1/23/1997 | -8.10 |
| 2/18/1997 | -6.40 |
| 3/18/1997 | -7.80 |
| 4/22/1997 | -44.40 |
| 5/18/1997 | -74.40 |
| 6/18/1997 | -93.20 |
| 7/22/1997 | -98.80 |
| 8/21/1997 | -101.20 |
| 9/20/1997 | -103.40 |

| WS_ELEV 1997-98 | |
|---|---|
| 10/21/1997 | -57.10 |
| 11/14/1997 | -45.20 |
| 12/19/1997 | -29.10 |
| 1/14/1998 | -20.20 |
| 2/16/1998 | -24.40 |
| 3/19/1998 | -11.80 |
| 4/14/1998 | -8.10 |
| 5/17/1998 | -58.50 |
| 6/16/1998 | -86.10 |
| 7/15/1998 | -95.60 |
| 8/24/1998 | -111.50 |
| 9/24/1998 | -113.30 |

| WS_ELEV 1998-99 | |
|---|---|
| 10/16/1998 | -61.30 |
| 11/16/1998 | -42.20 |
| 12/13/1998 | -21.80 |
| 1/23/1999 | -22.90 |
| 2/17/1999 | -32.20 |
| 3/22/1999 | -14.50 |
| 4/19/1999 | -15.40 |
| 5/18/1999 | -70.40 |
| 6/18/1999 | -88.40 |
| 7/22/1999 | -96.40 |
| 9/24/1999 | -107.40 |
| | |

| WS_ELEV 1999-00 | |
|---|---|
| 10/24/1999 | -48.90 |
| 11/22/1999 | -35.90 |
| 1/19/2000 | -29.30 |
| 2/24/2000 | -28.00 |
| 3/22/2000 | -19.90 |
| 4/21/2000 | -25.00 |
| 5/1/2000 | -81.20 |
| 6/20/2000 | -97.90 |
| 7/17/2000 | -102.70 |
| 8/22/2000 | -109.00 |
| 9/23/2000 | -109.40 |
| | |

| WS_ELEV 2000-01 | |
|---|---|
| 10/23/2000 | -63.60 |
| 11/23/2000 | -45.20 |
| 12/23/2000 | -41.60 |
| 1/20/2001 | -38.40 |
| 2/20/2001 | -31.90 |
| 3/23/2001 | -30.30 |
| 4/15/2001 | -22.80 |
| 5/24/2001 | -85.20 |
| 6/20/2001 | -98.50 |
| 7/22/2001 | -104.90 |
| 8/23/2001 | -107.90 |
| 9/24/2001 | -110.30 |

| WS_ELEV 2001-02 | |
|---|---|
| 10/20/2001 | -70.40 |
| 11/19/2001 | -48.40 |
| 1/20/2002 | -40.80 |
| 2/22/2002 | -44.10 |
| 3/21/2002 | -27.20 |
| 4/18/2002 | -22.00 |
| 5/23/2002 | -90.00 |
| 6/22/2002 | -120.50 |
| 7/24/2002 | -107.40 |
| 8/18/2002 | -108.90 |
| 9/12/2002 | -109.90 |
| | |

| WS_ELEV 2002-03 | |
|---|---|
| 10/22/2002 | -70.40 |
| 11/20/2002 | -51.00 |
| 12/1/2002 | -40.80 |
| 1/22/2003 | -38.30 |
| 2/20/2003 | -37.70 |
| 3/17/2003 | -30.90 |
| 4/18/2003 | -45.90 |
| 5/23/2003 | -88.10 |
| 6/23/2003 | -73.70 |
| 7/18/2003 | -68.20 |
| 8/20/2003 | -57.50 |
| 9/24/2003 | -71.40 |

| WS_ELEV 2003-04 | |
|---|---|
| 10/22/2003 | -49.70 |
| 11/22/2003 | -50.40 |
| 12/10/2003 | -38.40 |
| 1/22/2004 | -41.40 |
| 2/23/2004 | -31.20 |
| 3/22/2004 | -24.40 |
| 4/17/2004 | -23.10 |
| 5/22/2004 | -48.60 |
| 6/20/2004 | -67.50 |
| 7/20/2004 | -95.40 |
| 8/17/2004 | -102.20 |
| 9/21/2004 | -105.90 |

| WS_ELEV 2004-05 | |
|---|---|
| 10/20/2004 | -61.40 |
| 11/18/2004 | -48.00 |
| 12/23/2004 | -53.40 |
| 1/17/2005 | -33.20 |
| 2/24/2005 | -26.90 |
| 3/23/2005 | -21.30 |
| 4/23/2005 | -21.40 |
| 5/23/2005 | -39.40 |
| 6/15/2005 | -38.50 |
| 7/17/2005 | -69.30 |
| 8/23/2005 | -66.90 |
| 9/22/2005 | -74.40 |

| WS_ELEV 2005-06 | |
|---|---|
| 10/22/2005 | -37.40 |
| 11/21/2005 | -30.90 |
| 12/15/2005 | -28.40 |
| 1/22/2006 | -14.40 |
| 2/22/2006 | -13.30 |
| 3/22/2006 | -13.40 |
| 4/23/2006 | -8.30 |
| 5/23/2006 | -53.80 |
| 6/18/2006 | -73.20 |
| 7/23/2006 | -70.80 |
| 8/22/2006 | -81.20 |
| 9/23/2006 | -93.50 |

| WS_ELEV 2006-07 | |
|---|---|
| 10/23/2006 | -40.70 |
| 11/18/2006 | -28.70 |
| 12/20/2006 | -21.50 |
| 1/18/2007 | -19.30 |
| 2/24/2007 | -15.90 |
| 3/17/2007 | -13.40 |
| 4/16/2007 | -13.20 |
| 5/22/2007 | -41.30 |
| 6/16/2007 | -83.50 |
| 7/17/2007 | -106.90 |
| 8/22/2007 | -101.90 |
| 9/22/2007 | -103.70 |

# WATER CONSERVATION – WELL MEASUREMENT – GROUND WATER

**Reading for well No.** 460K
**State Well No.** 4S12W28H09
**Latitude:** 33-47-51 **Longitude:** 118-08-17 **Thomas Guide Page:** 796 A3

| WS_ELEV 2007-08 | |
|---|---|
| 10/24/2007 | -108.90 |
| 11/18/2007 | -102.40 |
| 12/17/2007 | -97.40 |
| 01/21/2008 | -87.50 |
| 02/24/2008 | -77.00 |
| 03/23/2008 | -68.80 |
| 04/22/2008 | -40.40 |
| 05/24/2008 | -67.90 |
| 06/16/2008 | -77.80 |
| 07/18/2008 | -90.20 |
| 8/21/2008 | -103.9 |
| 9/24/2008 | -90.2 |

| WS_ELEV 2008-09 | |
|---|---|
| 10/19/2008 | -89 |
| 11/21/2008 | -91.9 |
| 12/23/2008 | -84.5 |
| 01/22/2009 | -91.6 |
| 02/21/2009 | -85.7 |
| 03/24/2009 | -89.3 |
| 04/17/2009 | -95.3 |
| 05/22/2009 | -100.6 |
| 06/22/2009 | -91.3 |
| 07/22/2009 | -90.2 |
| 8/19/2009 | -100.1 |
| 9/15/2009 | -99.9 |

| WS_ELEV 2009-10 | |
|---|---|
| 10/18/2009 | -57.6 |
| 11/20/2009 | -83.4 |
| 12/20/2009 | -94.9 |
| 1/14/2010 | -102.4 |
| 2/14/2010 | -97.9 |
| 3/14/2010 | -97.7 |
| 4/22/2010 | -104.5 |
| 5/15/2010 | 105.5 |
| 6/15/2010 | -104.7 |
| 8/16/2010 | -101.4 |
| 9/19/2010 | -107.50 |
| | |

| WS_ELEV 2010-11 | |
|---|---|
| 10/20/2010 | -106.9 |
| 11/18/2010 | -109.3 |
| 12/23/2010 | -54.2 |
| 1/20/2011 | -56.2 |
| 2/23/2011 | -80.9 |
| 3/18/2011 | -86.4 |
| 4/19/2011 | -55.7 |
| 5/20/2011 | -43.6 |
| | |
| 7/14/2011 | -39.1 |
| 8/14/2011 | -29.50 |
| 9/13/2011 | -28.30 |
| | |

| WS_ELEV 2011-12 | |
|---|---|
| 10/22/2011 | -16.3 |
| 11/13/2011 | -36.7 |
| 12/18/2011 | -53 |
| 1/13/2012 | -75 |
| 2/19/2012 | -79.9 |
| 3/17/2012 | -78.6 |
| 4/20/2012 | -76.2 |
| 5/14/2012 | -77.7 |
| 6/17/2012 | -84.1 |
| 7/10/2012 | -79.6 |
| 8/24/2012 | -93.7 |
| 9/21/2012 | -89.6 |
| | |

| WS_ELEV 2012-13 | |
|---|---|
| 10/25/2012 | -45.5 |
| 11/11/2012 | -39 |
| 12/10/2012 | -34.7 |
| 1/13/2013 | -38.5 |
| 2/18/2013 | -42.6 |
| 3/14/2013 | -46 |
| 4/14/2013 | -50.7 |
| 5/12/2013 | -54.9 |
| 6/18/2013 | -58.2 |
| 7/21/2013 | -60.3 |
| 8/26/2013 | -62.1 |
| 9/22/2013 | -61.9 |
| | |

| WS_ELEV 2013-14 | |
|---|---|
| 10/13/2013 | -66.4 |
| 11/14/2013 | -41.8 |
| 12/15/2013 | -43.4 |
| 1/12/2014 | -75.5 |
| 2/21/2014 | -97.5 |
| 3/15/2014 | -98.4 |
| 4/13/2014 | -100.4 |
| 5/14/2014 | -102.6 |
| 6/17/2014 | -100.3 |
| 7/25/2014 | -102.5 |
| 8/19/2014 | -109.2 |
| 9/18/2014 | -111.2 |
| | |

| WS_ELEV 2014-15 | |
|---|---|
| 10/16/2014 | -109.9 |
| 11/19/2014 | -105.2 |
| 12/16/2014 | -75.3 |
| 1/20/2015 | -51.6 |
| 2/9/2015 | -47.3 |
| 3/17/2015 | -35.4 |
| 4/18/2015 | -28.8 |
| 5/19/2015 | -67.7 |
| 6/14/2015 | -78.3 |
| 7/14/2015 | -83.3 |
| 0819/2015 | -93.3 |
| 9/22/2015 | -96.6 |
| | |

| WS_ELEV 2015-16 | |
|---|---|
| 10/21/2015 | -95.3 |
| 11/10/2015 | -74.5 |
| 12/15/2015 | -87.2 |
| 1/9/2016 | -89 |
| 2/18/2016 | -86.6 |
| 3/13/2016 | -87.4 |
| 4/17/2016 | -87.4 |
| 5/21/2016 | -90.6 |
| 6/22/2016 | -85.6 |
| 7/14/2016 | -93.3 |
| 8/20/2016 | -92.7 |
| 9/14/2016 | -90.9 |
| | |

# WATER CONSERVATION – WELL MEASUREMENT – GROUND WATER

**Reading for well No.** 460K
**State Well No.** 4S12W28H09
**Latitude:** 33-47-51 **Longitude:** 118-08-17 **Thomas Guide Page:** 796 A3

| WS_ELEV 2016-17 | |
|---|---|
| 10/16/2016 | -90.2 |
| 11/11/2016 | -89.3 |
| 12/13/2016 | -88.9 |
| 1/16/2017 | -80.9 |
| 2/12/2017 | -86.8 |
| 3/11/2017 | -86 |
| 4/18/2017 | -89 |
| 5/13/2017 | -91.7 |
| 6/10/2017 | -91.7 |
| 7/15/2017 | -92.1 |
| 8/12/2017 | -91.4 |
| 9/23/2017 | -86.7 |
| | |

| WS_ELEV 2017-18 | |
|---|---|
| 10/12/2017 | -84 |
| 11/5/2017 | -79.8 |
| 12/8/2017 | -76.4 |
| 1/7/2018 | -71.6 |
| 2/10/2018 | -73.1 |
| 3/17/2018 | -77 |
| 4/10/2018 | -77 |
| 5/22/2018 | -83 |
| 6/10/2018 | -84.6 |
| 7/14/2018 | -85 |
| 8/12/2018 | -85.4 |
| 9/12/2018 | -92.7 |
| | |

| WS_ELEV 2018-19 | |
|---|---|
| 10/13/2018 | -96.9 |
| 11/17/2018 | -93.2 |
| 12/8/2018 | -93.9 |
| 1/5/2019 | -91.5 |
| 2/10/2019 | -89.4 |
| 3/12/2019 | -88.4 |
| 4/6/2019 | -88.4 |
| 5/11/2019 | -88.9 |
| 6/9/2019 | -89.4 |
| 7/13/2019 | -91.9 |
| 8/17/2019 | -91.2 |
| 9/10/2019 | -91.1 |
| | |

| WS_ELEV 2019-20 | |
|---|---|
| 10/12/2019 | -87.1 |
| 11/9/2019 | -86.7 |
| 12/8/2019 | -79 |
| 1/6/2020 | -80.9 |
| 2/8/2020 | -73.6 |
| 3/15/2020 | -41.4 |
| 4/10/2020 | -31.1 |
| 5/8/2020 | -31.2 |
| 6/10/2020 | -73.6 |
| 7/10/2020 | -83.1 |
| 8/8/2020 | -86.4 |
| 9/4/2020 | -88.1 |
| | |

# WATER CONSERVATION – WELL MEASUREMENT – GROUND WATER

**Reading for well No.** 760C
**State Well No.** 3S14W22L01
**Latitude:** 33-53-40 **Longitude:** 118-20-29 **Thomas Guide Page:** 733 E5

| WS_ELEV 1995-96 | |
|---|---|
| 10/31/1995 | -16.70 |
| 4/21/1996 | -22.20 |

| WS_ELEV 1996-97 | |
|---|---|
| 4/1/1997 | -22.20 |
| 5/27/1997 | -18.20 |
| 6/1/1997 | -21.20 |
| 7/28/1997 | -17.20 |
| 8/25/1997 | -20.20 |
| 9/29/1997 | -22.20 |

| WS_ELEV 1997-98 | |
|---|---|
| 10/1/1997 | -18.20 |
| 10/14/1997 | -20.20 |
| 3/28/1998 | -20.20 |
| 7/28/1998 | -27.20 |

| WS_ELEV 1998-99 | |
|---|---|
| 10/28/1998 | -24.20 |
| 11/28/1998 | -23.20 |
| 1/28/1999 | -22.20 |
| 4/28/1999 | -25.20 |
| 5/27/1999 | -24.20 |
| 8/28/1999 | -27.20 |

| WS_ELEV 1999-00 | |
|---|---|
| 11/28/1999 | -25.20 |
| 5/28/2000 | -28.20 |

| WS_ELEV 2000-01 | |
|---|---|
| 11/28/2000 | -32.00 |
| 3/28/2001 | -34.20 |

| WS_ELEV 2001-02 | |
|---|---|
| 10/14/2001 | -128.20 |
| 4/28/2002 | -68.20 |

| WS_ELEV 2002-03 | |
|---|---|
| 10/31/2002 | -85.20 |
| 4/28/2003 | -63.20 |

| WS_ELEV 2003-04 | |
|---|---|
| 11/28/2003 | -72.20 |
| 3/28/2004 | -76.20 |
| 9/30/2004 | -92.20 |

| WS_ELEV 2004-05 | |
|---|---|
| 5/20/2005 | -16.20 |

| WS_ELEV 2005-06 | |
|---|---|
| 4/28/2006 | 5.80 |

| WS_ELEV 2006-07 | |
|---|---|
| 5/14/2007 | 6.60 |

# WATER CONSERVATION – WELL MEASUREMENT – GROUND WATER

**Reading for well No.** 760C
**State Well No.** 3S14W22L01
**Latitude:** 33-53-40 **Longitude:** 118-20-29 **Thomas Guide Page:** 733 E5

| WS_ELEV 2007-08 | |
|---|---|
| 10/18/2007 | 2.80 |
| 5/2/2008 | 2.80 |
| 5/19/2008 | 2.80 |

| WS_ELEV 2008-09 | |
|---|---|
| 10/21/2008 | 1.8 |
| 11/25/2008 | 1.8 |
| 5/7/2009 | -8.2 |
| 9/30/2009 | 0 |

| WS_ELEV 2009-10 | |
|---|---|
| | |

| WS_ELEV 2010-11 | |
|---|---|
| 4/29/2011 | -5.00 |
| 5/23/2011 | -5.00 |
| 9/29/2011 | -9.80 |

| WS_ELEV 2011-12 | |
|---|---|
| | |

| WS_ELEV 2012-13 | |
|---|---|
| 10/2/2012 | -14.4 |
| 11/6/2012 | -14.4 |
| 1/7/2013 | -14.4 |

| WS_ELEV 2013-14 | |
|---|---|
| 12/3/2013 | -16.7 |
| 12/23/2013 | -16.7 |
| 1/14/2014 | -16.7 |
| 2/11/2014 | -28.00 |
| 3/11/2014 | -26.00 |
| 4/23/2014 | -14.40 |
| 5/1/2014 | -16.70 |
| 5/27/2014 | -16.70 |
| 7/2/2014 | -14.40 |
| 7/23/2014 | -14.40 |
| 8/5/2014 | -14.40 |
| 8/12/2014 | -14.00 |

| WS_ELEV 2014-15 | |
|---|---|
| 3/3/2015 | -8.20 |
| 3/27/2015 | -12.20 |
| 4/3/2015 | -12.20 |
| 6/18/2015 | -3.40 |
| 7/10/2015 | -8.20 |
| 7/21/2015 | 1.30 |
| 8/7/2015 | 1.80 |
| 10/2/2015 | -3.20 |

| WS_ELEV 2015-16 | |
|---|---|
| 10/20/2015 | -29.20 |
| 11/17/2015 | 3.80 |
| 12/17/2015 | -3.20 |
| 1/20/2016 | -5.70 |
| 2/19/2016 | -3.40 |

# WATER CONSERVATION – WELL MEASUREMENT – GROUND WATER

**Reading for well No.** 760C
**State Well No.** 3S14W22L01
**Latitude:** 33-53-40 **Longitude:** 118-20-29 **Thomas Guide Page:** 733 E5

| WS_ELEV 2016-17 | |
|---|---|
| 11/17/2016 | 3.80 |
| 12/19/2016 | 3.80 |
| 1/18/2017 | 3.80 |
| 2/15/2017 | -1.10 |

| WS_ELEV 2017-18 | |
|---|---|
| 2/19/2016 | -3.40 |
| 2/22/2016 | -3.40 |
| 10/24/2017 | -3.40 |

| WS_ELEV 2018-19 | |
|---|---|
| 10/25/2018 | 1.30 |
| 5/28/2019 | 8.10 |

| WS_ELEV 2019-20 | |
|---|---|
| 5/28/2019 | 8.10 |
| 5/6/2020 | -3.40 |

# WATER CONSERVATION – WELL MEASUREMENT – GROUND WATER

**Reading for well No.** 906D
**State Well No.** 4S13W12K01
**Latitude:** 33-50-10 **Longitude:** 118-11-35 **Thomas Guide Page:** 765 D5

| WS_ELEV 1995-96 | |
|---|---|
| 10/13/1995 | -31.40 |
| 11/18/1995 | -19.50 |
| 12/18/1995 | -12.70 |
| 1/22/1996 | -8.90 |
| 2/21/1996 | -6.10 |
| 3/20/1996 | -0.70 |
| 4/23/1996 | 2.50 |
| 5/23/1996 | -7.10 |
| 6/21/1996 | -19.70 |
| 7/22/1996 | -30.80 |
| 8/23/1996 | -41.00 |
| 9/23/1996 | -49.00 |

| WS_ELEV 1996-97 | |
|---|---|
| 10/31/1996 | -10.90 |
| 11/23/1996 | -22.20 |
| 12/23/1996 | -48.20 |
| 1/23/1997 | -5.40 |
| 2/18/1997 | -1.40 |
| 3/18/1997 | 3.20 |
| 4/22/1997 | -8.90 |
| 5/18/1997 | -33.20 |
| 6/18/1997 | -52.00 |
| 7/22/1997 | -66.20 |
| 8/21/1997 | -73.70 |
| 9/20/1997 | -80.70 |

| WS_ELEV 1997-98 | |
|---|---|
| 10/22/1997 | -1.30 |
| 11/14/1997 | -53.50 |
| 12/19/1997 | -36.50 |
| 1/14/1998 | -28.00 |
| 2/16/1998 | -19.20 |
| 3/19/1998 | -11.40 |
| 4/14/1998 | -6.50 |
| 5/17/1998 | -15.20 |
| 6/16/1998 | -45.80 |
| 7/15/1998 | -56.50 |
| 8/24/1998 | -71.00 |
| 9/24/1998 | -74.60 |

| WS_ELEV 1998-99 | |
|---|---|
| 10/16/1998 | -67.40 |
| 11/16/1998 | -50.70 |
| 12/13/1998 | -30.20 |
| 2/17/1999 | -17.20 |
| 3/22/1999 | -11.20 |
| 4/28/1999 | -7.00 |
| 5/18/1999 | -20.70 |
| 6/18/1999 | -43.20 |
| 7/22/1999 | -63.70 |
| 9/24/1999 | -80.80 |
| | |
| | |

| WS_ELEV 1999-00 | |
|---|---|
| 10/24/1999 | -58.20 |
| 11/22/1999 | -43.50 |
| 12/17/1999 | -38.70 |
| 1/19/2000 | -30.30 |
| 2/24/2000 | -5.40 |
| 3/22/2000 | -16.00 |
| 4/21/2000 | -11.20 |
| 5/20/2000 | -29.40 |
| 6/20/2000 | -57.00 |
| 7/17/2000 | -67.20 |
| 8/22/2000 | -78.30 |
| 9/23/2000 | -86.00 |

| WS_ELEV 2000-01 | |
|---|---|
| 10/23/2000 | -67.70 |
| 11/23/2000 | -54.70 |
| 12/23/2000 | -44.40 |
| 1/20/2001 | -36.10 |
| 2/20/2001 | -34.80 |
| 3/23/2001 | -29.20 |
| 4/15/2001 | -22.50 |
| 5/24/2001 | -42.20 |
| 6/20/2001 | -66.30 |
| 7/22/2001 | -71.80 |
| 8/23/2001 | -78.90 |
| 9/24/2001 | -84.80 |

| WS_ELEV 2001-02 | |
|---|---|
| 10/20/2001 | -74.00 |
| 11/19/2001 | -52.20 |
| 1/20/2002 | -34.40 |
| 2/22/2002 | -33.00 |
| 3/21/2002 | -26.90 |
| 4/19/2002 | -21.10 |
| 5/23/2002 | -37.90 |
| 6/22/2002 | -40.70 |
| 7/24/2002 | -70.60 |
| 8/18/2002 | -73.20 |
| 9/12/2002 | -80.00 |
| | |

| WS_ELEV 2002-03 | |
|---|---|
| 10/22/2002 | -73.50 |
| 11/20/2002 | -58.30 |
| 12/20/2002 | -48.40 |
| 1/22/2003 | -37.50 |
| 2/20/2003 | -35.40 |
| 3/17/2003 | -29.60 |
| 4/18/2003 | -26.80 |
| 5/23/2003 | -41.20 |
| 6/23/2003 | -50.00 |
| 7/18/2003 | -54.00 |
| 8/20/2003 | -53.20 |
| 9/24/2003 | -53.10 |

| WS_ELEV 2003-04 | |
|---|---|
| 10/22/2003 | -41.40 |
| 11/22/2003 | -39.20 |
| 12/10/2003 | -39.40 |
| 1/22/2004 | -37.30 |
| 2/23/2004 | -32.00 |
| 3/22/2004 | -25.50 |
| 4/17/2004 | -19.50 |
| 5/22/2004 | -23.10 |
| 6/20/2004 | -29.20 |
| 7/20/2004 | -49.00 |
| 8/17/2004 | -59.00 |
| 9/21/2004 | -68.20 |

| WS_ELEV 2004-05 | |
|---|---|
| 10/20/2004 | -65.50 |
| 11/18/2004 | -49.50 |
| 1/17/2005 | -36.00 |
| 2/24/2005 | -26.40 |
| 3/23/2005 | -50.70 |
| 4/23/2005 | -64.20 |
| 5/23/2005 | -15.70 |
| 6/15/2005 | -18.70 |
| 7/17/2005 | -28.40 |
| 8/23/2005 | -41.20 |
| 9/22/2005 | -41.30 |
| | |

| WS_ELEV 2005-06 | |
|---|---|
| 10/22/2005 | -35.30 |
| 11/21/2005 | -27.60 |
| 12/15/2005 | -21.90 |
| 1/22/2006 | -13.40 |
| 2/22/2006 | -12.00 |
| 3/22/2006 | -6.10 |
| 4/23/2006 | -2.20 |
| 5/23/2006 | -9.70 |
| 6/18/2006 | -24.10 |
| 7/23/2006 | -35.90 |
| 8/22/2006 | -40.20 |
| 9/23/2006 | -47.80 |

| WS_ELEV 2006-07 | |
|---|---|
| 10/23/2006 | -40.20 |
| 11/18/2006 | -30.10 |
| 12/20/2006 | -20.50 |
| 1/18/2007 | -12.30 |
| 2/24/2007 | -38.20 |
| 3/17/2007 | -38.20 |
| 4/16/2007 | 0.40 |
| 5/22/2007 | -7.70 |
| 6/16/2007 | -23.70 |
| 7/17/2007 | -43.40 |
| 8/22/2007 | -57.10 |
| 9/22/2007 | -62.60 |

# WATER CONSERVATION – WELL MEASUREMENT – GROUND WATER

**Reading for well No.** 906D
**State Well No.** 4S13W12K01
**Latitude:** 33-50-10 **Longitude:** 118-11-35 **Thomas Guide Page:** 765 D5

| WS_ELEV 2007-08 | |
|---|---|
| 10/24/2007 | -67.70 |
| 11/18/2007 | -71.00 |
| 12/17/2007 | -71.70 |
| 1/21/2008 | -66.40 |
| 2/24/2008 | -62.10 |
| 3/23/2008 | -60.20 |
| 4/22/2008 | -47.10 |
| 4/22/2008 | -49.70 |
| 5/24/2008 | -42.90 |
| 6/16/2008 | -43.60 |
| 7/18/2008 | -48.60 |
| 8/21/2008 | -55.1 |
| 9/24/2008 | -61.1 |

| WS_ELEV 2008-09 | |
|---|---|
| 10/19/2008 | -59.4 |
| 10/21/2008 | -59.7 |
| 11/21/2008 | -58.1 |
| 12/23/2008 | -56.4 |
| 01/22/2009 | -55.7 |
| 02/21/2009 | -58.0 |
| 03/24/2009 | -60.1 |
| 04/17/2009 | -59.4 |
| 05/22/2009 | -67.2 |
| 06/22/2009 | -67.7 |
| 07/22/2009 | -68.2 |
| 8/19/2009 | -72.2 |
| 9/15/2009 | -73 |

| WS_ELEV 2009-10 | |
|---|---|
| 10/18/2009 | -64.8 |
| 11/20/2009 | -55.2 |
| 12/20/2009 | -61.9 |
| 1/14/2010 | -68.1 |
| 2/14/2010 | -70.9 |
| 3/14/2010 | -72 |
| 4/22/2010 | -73 |
| 5/15/2010 | -72.8 |
| 6/15/2010 | -73.7 |
| 8/16/2010 | -73.4 |
| 9/19/2010 | -73.8 |
| | |
| | |

| WS_ELEV 2010-11 | |
|---|---|
| 10/20/2010 | -44.7 |
| 11/18/2010 | -68.6 |
| 12/23/2010 | -49.2 |
| 1/20/2011 | -42.9 |
| 2/23/2011 | -45.4 |
| 3/18/2011 | -68.6 |
| 4/19/2011 | -45.6 |
| 5/20/2011 | -36.4 |
| | |
| 7/14/2011 | -26.2 |
| 8/14/2011 | -21 |
| 9/13/2011 | -18.6 |
| | |

| WS_ELEV 2011-12 | |
|---|---|
| 10/22/2011 | -10.5 |
| 11/13/2011 | -8.9 |
| 12/18/2011 | -16.5 |
| 1/13/2012 | -25.6 |
| 2/19/2012 | -39.1 |
| 3/17/2012 | -43.8 |
| 4/20/2012 | -47.5 |
| 5/14/2012 | -47.1 |
| 6/17/2012 | -21.9 |
| 7/10/2012 | -51 |
| 8/24/2012 | -54.7 |
| 9/21/2012 | -54.4 |
| | |

| WS_ELEV 2012-13 | |
|---|---|
| 10/25/2012 | -45.5 |
| 11/11/2012 | -39 |
| 12/10/2012 | -34.7 |
| 1/13/2013 | -38.5 |
| 2/18/2013 | -42.6 |
| 3/14/2013 | -46 |
| 4/14/2013 | -50.7 |
| 5/12/2013 | -54.9 |
| 6/18/2013 | -58.2 |
| 7/21/2013 | -60.3 |
| 8/26/2013 | -62.1 |
| 9/22/2013 | -61.9 |
| | |

| WS_ELEV 2013-14 | |
|---|---|
| 10/13/2013 | -57.3 |
| 11/14/2013 | -44.1 |
| 12/15/2013 | -37.5 |
| 1/12/2014 | -40.9 |
| 2/21/2014 | -54.5 |
| 3/15/2014 | -59.7 |
| 4/13/2014 | -62.7 |
| 5/14/2014 | -66 |
| 6/17/2014 | -67.6 |
| 7/25/2014 | -68.7 |
| 8/19/2014 | -70.6 |
| 9/18/2014 | -73.2 |
| | |

| WS_ELEV 2014-15 | |
|---|---|
| 10/16/2014 | -74.7 |
| 11/19/2014 | -76.2 |
| 12/16/2014 | -77.2 |
| 1/20/2015 | -59 |
| 2/9/2015 | -52.5 |
| 3/17/2015 | -42.1 |
| 4/15/2015 | -33.7 |
| 5/19/2015 | -39.2 |
| 6/14/2015 | |
| 7/14/2015 | -55.9 |
| 8/19/2015 | -60 |
| 9/22/2015 | -34.4 |
| | |

| WS_ELEV 2015-16 | |
|---|---|
| 10/21/2015 | -67.2 |
| 11/10/2015 | -63.4 |
| 12/15/2015 | -62.7 |
| 1/9/2016 | -63.6 |
| 2/18/2016 | -62.9 |
| 3/13/2016 | -62.8 |
| 4/16/2016 | -62.5 |
| 5/21/2016 | -62 |
| 6/22/2016 | -59.5 |
| 7/14/2016 | -58.3 |
| 8/20/2016 | -61.1 |
| 9/14/2016 | -59.1 |
| | |

# WATER CONSERVATION – WELL MEASUREMENT – GROUND WATER

**Reading for well No.** 906D
**State Well No.** 4S13W12K01
**Latitude:** 33-50-10 **Longitude:** 118-11-35 **Thomas Guide Page:** 765 D5

| WS_ELEV 2016-17 | |
|---|---|
| 10/16/2016 | -65.4 |
| 11/11/2016 | -63.4 |
| 12/13/2016 | -57.6 |
| 1/16/2017 | -74.3 |
| 2/12/2017 | -74.9 |
| 3/11/2017 | -75.6 |
| 4/18/2017 | -75.8 |
| 5/13/2017 | -75.9 |
| 6/10/2017 | -76.5 |
| 7/15/2017 | -77.1 |
| 8/12/2017 | -77 |
| 9/23/2017 | -76.6 |
| | |

| WS_ELEV 2017-18 | |
|---|---|
| 10/12/2017 | -76.1 |
| 11/5/2017 | -74.8 |
| 12/8/2017 | -72.9 |
| 1/7/2018 | -73.9 |
| 2/10/2018 | -68.4 |
| 3/17/2018 | -67.5 |
| 4/10/2018 | -67.6 |
| 5/22/2018 | -67.7 |
| 6/10/2018 | -67.6 |
| 7/14/2018 | -66 |
| 8/12/2018 | -66.4 |
| 9/12/2018 | -70 |
| | |

| WS_ELEV 2018-19 | |
|---|---|
| 10/13/2018 | -73.2 |
| 11/17/2018 | -74 |
| 12/8/2018 | -74.8 |
| 1/5/2019 | -73.4 |
| 2/10/2019 | -68.2 |
| 3/12/2019 | -65.7 |
| 4/6/2019 | -64.2 |
| 5/11/2019 | -62 |
| 6/9/2019 | -63.5 |
| 7/13/2019 | -63.2 |
| 8/17/2019 | -68.8 |
| 9/10/2019 | -75 |
| | |

| WS_ELEV 2019-20 | |
|---|---|
| 10/12/2019 | -78.6 |
| 11/9/2019 | -79.3 |
| 12/8/2019 | -71.8 |
| 1/6/2020 | -76.9 |
| 2/8/2020 | -64 |
| 3/15/2020 | -50.8 |
| 4/10/2020 | -39.7 |
| 5/8/2020 | -32.1 |
| 6/10/2020 | -45 |
| 7/10/2020 | -57.1 |
| 8/8/2020 | -64.8 |
| 9/4/2020 | -67.8 |
| | |

# WATER CONSERVATION – WELL MEASUREMENT – GROUND WATER

**Reading for well No.** 1601T
**State Well No.** 2S12W24M08
**Latitude:** 33-58-49 **Longitude:** 118-05-59 **Thomas Guide Page:** 676 E6

| WS_ELEV 1995-96 | |
|---|---|
| 10/27/1995 | 113.30 |
| 11/30/1995 | 113.40 |
| 12/29/1995 | 115.60 |
| 1/24/1996 | 118.10 |
| 2/29/1996 | 124.90 |
| 3/29/1996 | 128.40 |
| 4/25/1996 | 128.70 |
| 5/30/1996 | 125.10 |
| 6/28/1996 | 125.80 |
| 7/25/1996 | 123.80 |
| 8/31/1996 | 120.10 |
| 9/27/1996 | 119.50 |

| WS_ELEV 1996-97 | |
|---|---|
| 10/24/1996 | 117.70 |
| 11/29/1996 | 117.50 |
| 12/27/1996 | 124.70 |
| 1/30/1997 | 129.40 |
| 2/28/1997 | 129.20 |
| 3/28/1997 | 125.30 |
| 4/25/1997 | 127.20 |
| 5/23/1997 | 126.70 |
| 6/27/1997 | 124.60 |
| 7/31/1997 | 124.60 |
| 8/28/1997 | 120.20 |
| 9/27/1997 | 116.20 |

| WS_ELEV 1997-98 | |
|---|---|
| 10/31/1997 | 113.20 |
| 11/28/1997 | 112.10 |
| 12/24/1997 | 117.30 |
| 1/31/1998 | 122.30 |
| 2/28/1998 | 126.30 |
| 3/27/1998 | 128.20 |
| 4/30/1998 | 129.60 |
| 5/29/1998 | 127.70 |
| 6/26/1998 | 126.40 |
| 7/31/1998 | 124.90 |
| 8/28/1998 | 120.40 |
| 9/25/1998 | 117.30 |

| WS_ELEV 1998-99 | |
|---|---|
| 10/30/1998 | 116.20 |
| 11/27/1998 | 115.90 |
| 12/31/1998 | 115.20 |
| 1/29/1999 | 115.20 |
| 2/26/1999 | 117.50 |
| 3/26/1999 | 118.00 |
| 4/30/1999 | 120.00 |
| 5/28/1999 | 116.50 |
| 6/25/1999 | 115.40 |
| 7/30/1999 | 108.60 |
| 8/27/1999 | 104.90 |
| 9/24/1999 | 100.90 |

| WS_ELEV 1999-00 | |
|---|---|
| 10/29/1999 | 96.70 |
| 11/26/1999 | 96.10 |
| 12/31/1999 | 97.50 |
| 1/28/2000 | 103.70 |
| 2/25/2000 | 113.60 |
| 3/31/2000 | 119.80 |
| 4/21/2000 | 119.90 |
| 5/26/2000 | 119.40 |
| 6/30/2000 | 117.20 |
| 7/28/2000 | 113.50 |
| 8/18/2000 | 108.80 |
| | |

| WS_ELEV 2000-01 | |
|---|---|
| 10/27/2000 | 104.40 |
| 11/24/2000 | 105.90 |
| 12/30/2000 | 109.40 |
| 1/26/2001 | 108.80 |
| 2/22/2001 | 111.70 |
| 3/23/2001 | 117.30 |
| 4/26/2001 | 117.40 |
| 5/25/2001 | 113.30 |
| 6/29/2001 | 109.00 |
| 7/27/2001 | 104.40 |
| 8/31/2001 | 99.00 |
| 9/28/2001 | 98.00 |

| WS_ELEV 2001-02 | |
|---|---|
| 10/26/2001 | 96.60 |
| 11/23/2001 | 99.00 |
| 12/31/2001 | 100.00 |
| 1/25/2002 | 113.80 |
| 2/22/2002 | 112.40 |
| 3/29/2002 | 110.70 |
| 4/26/2002 | 109.50 |
| 5/31/2002 | 107.80 |
| 6/28/2002 | 106.10 |
| 7/26/2002 | 104.90 |
| 8/31/2002 | 99.20 |
| 9/27/2002 | 94.80 |

| WS_ELEV 2002-03 | |
|---|---|
| 10/25/2002 | 92.80 |
| 11/22/2002 | 99.10 |
| 12/28/2002 | 111.10 |
| 1/31/2003 | 111.00 |
| 2/28/2003 | 114.90 |
| 3/26/2003 | 118.20 |
| 4/18/2003 | 117.90 |
| 5/30/2003 | 114.20 |
| 6/27/2003 | 107.70 |
| 7/25/2003 | 100.70 |
| 8/29/2003 | 93.40 |
| 9/26/2003 | 88.80 |

| WS_ELEV 2003-04 | |
|---|---|
| 10/31/2003 | 85.80 |
| 11/28/2003 | 86.60 |
| 12/26/2003 | 87.30 |
| 1/30/2004 | 90.50 |
| 2/28/2004 | 97.90 |
| 3/26/2004 | 105.10 |
| 4/23/2004 | 101.50 |
| 5/29/2004 | 94.90 |
| 6/25/2004 | 90.30 |
| 7/30/2004 | 88.00 |
| 8/27/2004 | 83.70 |
| 9/18/2004 | 79.20 |

| WS_ELEV 2004-05 | |
|---|---|
| 10/30/2004 | 85.90 |
| 11/26/2004 | 93.20 |
| 12/31/2004 | 103.50 |
| 1/29/2005 | 114.20 |
| 2/25/2005 | 117.20 |
| 3/25/2005 | 120.40 |
| 4/29/2005 | 121.60 |
| 5/14/2005 | 122.20 |
| 6/24/2005 | 120.10 |
| 7/29/2005 | 116.80 |
| 8/26/2005 | 111.80 |
| 9/30/2005 | 105.90 |

| WS_ELEV 2005-06 | |
|---|---|
| 10/28/2005 | 102.90 |
| 11/26/2005 | 99.20 |
| 12/30/2005 | 97.70 |
| 1/27/2006 | 101.10 |
| 2/25/2006 | 102.50 |
| 3/31/2006 | 113.70 |
| 4/28/2006 | 119.30 |
| 5/27/2006 | 120.30 |
| 6/30/2006 | 117.00 |
| 7/28/2006 | 114.30 |
| 8/25/2006 | 113.90 |
| 9/30/2006 | 109.00 |

| WS_ELEV 2006-07 | |
|---|---|
| 10/27/2006 | 106.70 |
| 11/25/2006 | 106.90 |
| 12/29/2006 | 109.30 |
| 1/26/2007 | 112.40 |
| 2/24/2007 | 110.70 |
| 3/28/2007 | 112.50 |
| 4/27/2007 | 115.30 |
| 5/25/2007 | 111.60 |
| 6/30/2007 | 105.30 |
| 7/28/2007 | 100.40 |
| 8/31/2007 | 94.90 |
| 9/28/2007 | 91.00 |

# WATER CONSERVATION – WELL MEASUREMENT – GROUND WATER

**Reading for well No.** 1601T
**State Well No.** 2S12W24M08
**Latitude:** 33-58-49 **Longitude:** 118-05-59 **Thomas Guide Page:** 676 E6

| WS_ELEV 2007-08 | |
|---|---|
| 10/26/2007 | 87.40 |
| 11/3/2007 | 86.50 |
| 12/28/2007 | 89.20 |
| 1/26/2008 | 97.70 |
| 2/29/2008 | 107.70 |
| 3/28/2008 | 104.70 |
| 4/25/2008 | 99.80 |
| 5/31/2008 | 93.50 |
| 6/28/2008 | 88.80 |
| 7/25/2008 | 84.70 |
| 8/30/2008 | 82.3 |
| 9/26/2008 | 80.6 |

| WS_ELEV 2008-09 | |
|---|---|
| 10/31/2008 | 77.7 |
| 11/28/2008 | 76.3 |
| 12/26/2008 | 82.0 |
| 1/30/2009 | 79.5 |
| 2/27/2009 | 94.00 |
| 3/27/2009 | 95.2 |
| 4/24/2009 | 87.80 |
| 5/29/2009 | 82.3 |
| 6/26/2009 | 78.1 |
| 7/31/2009 | 73.9 |
| 8/28/2009 | 72.30 |
| 9/25/2009 | 69.20 |

| WS_ELEV 2009-10 | |
|---|---|
| 10/30/2009 | 67.2 |
| 11/27/2009 | 67.4 |
| 12/4/2009 | 74.7 |
| 1/30/2010 | 82.5 |
| 2/27/2010 | 98.4 |
| 3/26/2010 | 101.5 |
| 4/30/2010 | 105.4 |
| 5/28/2010 | 100.8 |
| 6/25/2010 | 94.7 |
| 08/27/10 | 80.8 |
| 9/24/2010 | 77.1 |
| | |

| WS_ELEV 2010-11 | |
|---|---|
| 10/2/2010 | 76.2 |
| 11/6/2010 | 79.7 |
| 12/4/2010 | 90.5 |
| 1/8/2011 | 104.9 |
| 2/4/2011 | 106.6 |
| 3/4/2011 | 110.9 |
| 4/1/2011 | 115.3 |
| 5/6/2011 | 117.7 |
| | |
| 07/01/11 | 113.5 |
| 8/5/2011 | 108.5 |
| 9/2/2011 | 107.9 |
| | |

| WS_ELEV 2011-12 | |
|---|---|
| 10/21/2011 | 104.3 |
| 11/18/2011 | 105.5 |
| 12/17/2011 | 105.2 |
| 1/21/2012 | 103.3 |
| 2/17/2012 | 102.3 |
| 3/17/2012 | 99.7 |
| 4/21/2012 | 104.6 |
| 5/18/2012 | 102.8 |
| 6/22/2012 | 98.8 |
| 7/20/2012 | 94.6 |
| 8/24/2012 | 89.1 |
| 9/21/2012 | 85.8 |
| | |

| WS_ELEV 2012-13 | |
|---|---|
| 10/19/2012 | 83.3 |
| 11/16/2012 | 81.9 |
| 12/21/2012 | 84.1 |
| 1/18/2013 | 87 |
| 2/15/2013 | 88.1 |
| 3/22/2013 | 86.7 |
| 4/19/2013 | 85.4 |
| 5/17/2013 | 82.4 |
| 6/20/2013 | 80.1 |
| 7/19/2013 | 78.4 |
| 8/16/2013 | 75.5 |
| 9/20/2013 | 73.3 |
| | |

| WS_ELEV 2013-14 | |
|---|---|
| 10/12/2013 | 71.2 |
| 11/15/2013 | 67.7 |
| 12/13/2013 | 66.8 |
| 1/17/2014 | 67.3 |
| 2/15/2014 | 65.6 |
| 3/14/2014 | 71.4 |
| 4/12/2014 | 70.6 |
| 5/16/2014 | 66.9 |
| 6/13/2014 | 65.2 |
| 7/11/2014 | 63.7 |
| 8/15/2014 | 62.3 |
| 9/12/2014 | 61.2 |
| | |

| WS_ELEV 2014-15 | |
|---|---|
| 10/3/2014 | 59.8 |
| 11/14/2014 | 58.6 |
| 12/12/2014 | 59.5 |
| 1/16/2015 | 64.9 |
| 2/13/2015 | 64.6 |
| 3/13/2015 | 65.1 |
| 4/10/2015 | 67.5 |
| 5/15/2015 | 66.7 |
| 6/12/2015 | 64.5 |
| 7/17/2015 | 62.9 |
| 8/14/2015 | 59.6 |
| 9/18/2015 | 56.3 |
| | |

| WS_ELEV 2015-16 | |
|---|---|
| 10/15/2015 | 54.7 |
| 11/13/2015 | 53.5 |
| 12/17/2015 | 52.8 |
| 1/17/2016 | 61.9 |
| 2/16/2016 | 65.8 |
| 3/17/2016 | 66.6 |
| 4/16/2016 | 71.8 |
| 5/19/2016 | 69.7 |
| 6/17/2016 | 67.7 |
| 7/15/2016 | 65.5 |
| 8/18/2016 | 62.3 |
| 9/17/2016 | 61.1 |
| | |

# WATER CONSERVATION – WELL MEASUREMENT – GROUND WATER

**Reading for well No.** 1601T
**State Well No.** 2S12W24M08
**Latitude:** 33-58-49 **Longitude:** 118-05-59 **Thomas Guide Page:** 676 E6

| WS_ELEV 2016-17 | |
|---|---|
| 10/14/2016 | 60.3 |
| 11/11/2016 | 60.2 |
| 12/16/2016 | 65.5 |
| 1/13/2017 | 84.4 |
| 2/16/2017 | 97.9 |
| 3/17/2017 | 99.7 |
| 4/20/2017 | 92.3 |
| 5/18/2017 | 86.9 |
| 6/17/2017 | 82.1 |
| 7/20/2017 | 79.3 |
| 8/19/2017 | 83.7 |
| 9/15/2017 | 79.9 |
| | |

| WS_ELEV 2017-18 | |
|---|---|
| 10/20/2017 | 75.8 |
| 11/17/2017 | 71.8 |
| 12/22/2017 | 69.8 |
| 1/19/2018 | 72.2 |
| 2/16/2018 | 72.1 |
| 3/22/2018 | 71.3 |
| 4/20/2018 | 72.3 |
| 5/18/2018 | 70.4 |
| 6/23/2018 | 67.6 |
| 7/20/2018 | 64.5 |
| 8/23/2018 | 61.4 |
| 9/21/2018 | 59 |
| | |

| WS_ELEV 2018-19 | |
|---|---|
| 10/5/2018 | 58.3 |
| 11/2/2018 | 56.8 |
| 12/8/2018 | 56.2 |
| 1/4/2019 | 59.6 |
| 2/1/2019 | 69.2 |
| 3/2/2019 | 86.1 |
| 4/6/2019 | 90.2 |
| 5/4/2019 | 82.4 |
| 6/7/2019 | 76.1 |
| 7/5/2019 | 81.1 |
| 8/2/2019 | 78.9 |
| 9/6/2019 | 72.9 |
| | |

| WS_ELEV 2019-20 | |
|---|---|
| 10/4/2019 | 69.5 |
| 11/2/2019 | 64.9 |
| 12/6/2019 | 63.1 |
| 1/3/2020 | 71.2 |
| 2/7/2020 | 70.2 |
| 3/6/2020 | 67.5 |
| 4/2/2020 | 73 |
| 5/8/2020 | 79.3 |
| 6/5/2020 | 77.2 |
| 7/2/2020 | 73.5 |
| 8/6/2020 | 74.8 |
| 9/4/2020 | 72.6 |
| | |

# WATER CONSERVATION – WELL MEASUREMENT – GROUND WATER

**Reading for well No.** 2965C
**State Well No.** 1S11W33G01
**Latitude:** 34-02-36 **Longitude:** 118-01-58 **Thomas Guide Page:** 637 D4

| WS_ELEV 1995-96 | |
|---|---|
| 4/10/1996 | 223.30 |

| WS_ELEV 1996-97 | |
|---|---|
| 10/23/1996 | 220.00 |
| 5/6/1997 | 220.10 |

| WS_ELEV 1997-98 | |
|---|---|
| 10/21/1997 | 215.40 |
| 4/6/1998 | 219.00 |

| WS_ELEV 1998-99 | |
|---|---|
| 10/16/1998 | 220.20 |
| 4/12/1999 | 222.70 |

| WS_ELEV 1999-00 | |
|---|---|
| 11/12/1999 | 216.40 |
| 3/16/2000 | 216.10 |
| 9/30/2000 | 218.10 |

| WS_ELEV 2000-01 | |
|---|---|
| 4/9/2001 | 213.39 |

| WS_ELEV 2001-02 | |
|---|---|
| 10/9/2001 | 215.25 |
| 5/8/2002 | 215.04 |

| WS_ELEV 2002-03 | |
|---|---|
| 11/7/2002 | 205.70 |
| 4/28/2003 | 206.60 |

| WS_ELEV 2003-04 | |
|---|---|
| 10/15/2003 | Dry |
| 4/9/2004 | Dry |

| WS_ELEV 2004-05 | |
|---|---|

| WS_ELEV 2005-06 | |
|---|---|

| WS_ELEV 2006-07 | |
|---|---|

# WATER CONSERVATION – WELL MEASUREMENT – GROUND WATER

**Reading for well No.** 2965C
**State Well No.** 1S11W33G01
**Latitude:** 34-02-36 **Longitude:** 118-01-58 **Thomas Guide Page:** 637 D4

| WS_ELEV 2007-08 | |
|---|---|
| | |

| WS_ELEV 2008-09 | |
|---|---|
| 4/17/2009 | 201.9 |

| WS_ELEV 2009-10 | |
|---|---|
| 10/15/2009 | 246 |

| WS_ELEV 2010-11 | |
|---|---|
| 4/24/2011 | 201.8 |

| WS_ELEV 2011-12 | |
|---|---|
| 10/22/2011 | 188.2 |
| 4/28/2012 | 201.5 |

| WS_ELEV 2012-13 | |
|---|---|
| 10/20/2012 | 193.8 |
| 4/22/2013 | Dry |

| WS_ELEV 2013-14 | |
|---|---|
| 10/17/2013 | Dry |
| 10/11/2014 | Dry |

| WS_ELEV 2014-15 | |
|---|---|
| 10/11/2014 | Dry |
| 4/11/2015 | Dry |
| 10/15/2015 | Dry |

| WS_ELEV 2015-16 | |
|---|---|
| 10/15/2016 | Dry |

# WATER CONSERVATION – WELL MEASUREMENT – GROUND WATER

**Reading for well No.** 2965C
**State Well No.** 1S11W33G01
**Latitude:** 34-02-36 **Longitude:** 118-01-58 **Thomas Guide Page:** 637 D4

| WS_ELEV 2016-17 | |
|---|---|
| 11/4/2016 | Dry |
| 4/19/2017 | Dry |
| | |
| | |
| | |
| | |
| | |
| | |
| | |
| | |
| | |
| | |

| WS_ELEV 2017-18 | |
|---|---|
| | Dry |
| | Dry |
| | |
| | |
| | |
| | |
| | |
| | |
| | |
| | |
| | |
| | |

| WS_ELEV 2018-19 | |
|---|---|
| 10/26/2018 | Dry |
| 5/12/2019 | inaccessible |
| | |
| | |
| | |
| | |
| | |
| | |
| | |
| | |
| | |
| | |

| WS_ELEV 2019-20 | |
|---|---|
| 5/12/2019 | inaccessible |
| 5/9/2020 | inaccessible |
| | |
| | |
| | |
| | |
| | |
| | |
| | |
| | |
| | |
| | |

# WATER CONSERVATION – WELL MEASUREMENT – GROUND WATER

**Reading for well No.** 3030F
**State Well No.** 1S10W07R02
**Latitude:** 34-05-34 **Longitude:** 117-57-46 **Thomas Guide Page:** 598 C4

| WS_ELEV 1995-96 | |
|---|---|
| 10/27/1995 | 257.80 |
| 11/30/1995 | 255.70 |
| 12/29/1995 | 253.90 |
| 1/24/1996 | 252.20 |
| 2/29/1996 | 250.40 |
| 3/29/1996 | 250.10 |
| 4/26/1996 | 248.80 |
| 5/30/1996 | 249.50 |
| 6/28/1996 | 248.50 |
| 7/25/1996 | 247.30 |
| 8/31/1996 | 248.10 |
| 9/27/1996 | 248.90 |

| WS_ELEV 1996-97 | |
|---|---|
| 10/24/1996 | 248.70 |
| 11/29/1996 | 246.90 |
| 12/27/1996 | 228.90 |
| 1/23/1997 | 246.70 |
| 2/28/1997 | 251.30 |
| 3/28/1997 | 248.90 |
| 4/25/1997 | 246.20 |
| 5/23/1997 | 243.50 |
| 6/27/1997 | 240.50 |
| 7/31/1997 | 238.70 |
| 8/28/1997 | 239.70 |
| 9/27/1997 | 238.90 |

| WS_ELEV 1997-98 | |
|---|---|
| 10/31/1997 | 238.60 |
| 11/28/1997 | 238.20 |
| 12/24/1997 | 239.90 |
| 1/31/1998 | 241.00 |
| 2/22/1998 | 241.60 |
| 3/27/1998 | 249.50 |
| 4/30/1998 | 255.90 |
| 5/29/1998 | 262.00 |
| 6/26/1998 | 267.60 |
| 7/31/1998 | 267.20 |
| 8/28/1998 | 265.40 |
| 9/25/1998 | 264.40 |

| WS_ELEV 1998-99 | |
|---|---|
| 10/30/1998 | 261.80 |
| 11/27/1998 | 260.70 |
| 12/31/1998 | 258.80 |
| 1/29/1999 | 255.80 |
| 2/26/1999 | 253.90 |
| 3/26/1999 | 251.90 |
| 4/30/1999 | 250.30 |
| 5/28/1999 | 247.40 |
| 6/25/1999 | 245.30 |
| 7/30/1999 | 241.90 |
| 8/27/1999 | 240.00 |
| 9/24/1999 | 238.90 |

| WS_ELEV 1999-00 | |
|---|---|
| 10/29/1999 | 236.80 |
| 11/26/1999 | 235.00 |
| 12/31/1999 | 232.90 |
| 1/28/2000 | 231.40 |
| 2/25/2000 | 231.00 |
| 3/31/2000 | 230.90 |
| 4/28/2000 | 230.50 |
| 5/26/2000 | 229.60 |
| 6/30/2000 | 228.10 |
| 7/28/2000 | 227.20 |
| 8/25/2000 | 225.20 |
| 9/29/2000 | 225.60 |

| WS_ELEV 2000-01 | |
|---|---|
| 10/27/2000 | 227.10 |
| 11/27/2000 | 228.30 |
| 12/30/2000 | 228.80 |
| 1/26/2001 | 229.40 |
| 2/22/2001 | 227.40 |
| 3/23/2001 | 227.00 |
| 4/26/2001 | 225.40 |
| 5/25/2001 | 222.60 |
| 6/29/2001 | 219.90 |
| 7/27/2001 | 217.10 |
| 8/31/2001 | 216.90 |
| 9/28/2001 | 214.10 |

| WS_ELEV 2001-02 | |
|---|---|
| 10/19/2001 | 215.20 |
| 11/23/2001 | 217.40 |
| 12/28/2001 | 218.40 |
| 1/25/2002 | 217.40 |
| 2/22/2002 | 216.30 |
| 3/29/2002 | 214.70 |
| 4/26/2002 | 213.40 |
| 5/31/2002 | 212.00 |
| 6/28/2002 | 210.60 |
| 7/26/2002 | 208.70 |
| 8/31/2002 | 207.00 |
| 9/27/2002 | 205.10 |

| WS_ELEV 2002-03 | |
|---|---|
| 10/25/2002 | 204.00 |
| 11/22/2002 | 203.50 |
| 12/28/2002 | 204.00 |
| 1/31/2003 | 203.30 |
| 6/27/2003 | 203.80 |
| 7/25/2003 | 204.90 |
| 8/29/2003 | 203.70 |
| 9/26/2003 | 206.50 |
| | |
| | |
| | |
| | |

| WS_ELEV 2003-04 | |
|---|---|
| 10/31/2003 | 210.10 |
| 11/29/2003 | 209.70 |
| 12/26/2003 | 209.40 |
| 1/30/2004 | 210.90 |
| 2/28/2004 | 212.50 |
| 3/26/2004 | 212.20 |
| 4/23/2004 | 211.30 |
| 5/22/2004 | 208.00 |
| 6/25/2004 | 204.90 |
| 7/30/2004 | 201.40 |
| 8/27/2004 | 199.20 |
| 9/24/2004 | 197.40 |

| WS_ELEV 2004-05 | |
|---|---|
| 10/30/2004 | 196.10 |
| 11/26/2004 | 195.40 |
| 12/31/2004 | 195.80 |
| 1/29/2005 | 203.40 |
| 2/26/2005 | 222.00 |
| 3/25/2005 | 238.10 |
| 4/29/2005 | 245.00 |
| 5/14/2005 | 247.70 |
| 6/24/2005 | 249.60 |
| 7/29/2005 | 244.70 |
| 8/26/2005 | 241.90 |
| 9/30/2005 | 240.90 |

| WS_ELEV 2005-06 | |
|---|---|
| 10/28/2005 | 241.10 |
| 11/26/2005 | 241.00 |
| 12/30/2005 | 242.10 |
| 1/27/2006 | 241.70 |
| 2/25/2006 | 241.50 |
| 3/31/2006 | 243.60 |
| 4/28/2006 | 246.80 |
| 5/27/2006 | 251.60 |
| 6/30/2006 | 250.70 |
| 7/28/2006 | 246.10 |
| 8/25/2006 | 243.20 |
| 9/30/2006 | 239.70 |

| WS_ELEV 2006-07 | |
|---|---|
| 10/27/2006 | 237.90 |
| 11/25/2006 | 236.00 |
| 12/29/2006 | 234.40 |
| 1/26/2007 | 232.60 |
| 2/24/2007 | 230.90 |
| 3/28/2007 | 227.90 |
| 4/27/2007 | 226.00 |
| 5/25/2007 | 223.80 |
| 6/30/2007 | 220.70 |
| 7/28/2007 | 217.70 |
| 8/31/2007 | 214.70 |
| 9/28/2007 | 212.60 |

# WATER CONSERVATION – WELL MEASUREMENT – GROUND WATER

**Reading for well No.** 3030F
**State Well No.** 1S10W07R02
**Latitude:** 34-05-34 **Longitude:** 117-57-46 **Thomas Guide Page:** 598 C4

| WS_ELEV 2007-08 | |
|---|---|
| 10/26/2007 | 211.30 |
| 11/3/2007 | 210.90 |
| 12/28/2007 | 209.00 |
| 1/26/2008 | 208.80 |
| 2/29/2008 | 208.80 |
| 3/28/2008 | 207.40 |
| 4/25/2008 | 206.10 |
| 5/31/2008 | 204.40 |
| 6/28/2008 | 202.70 |
| 7/25/2008 | 202.30 |
| | |
| | |

| WS_ELEV 2008-09 | |
|---|---|
| 1/30/2009 | 200.4 |
| 2/27/2009 | 201 |
| 3/27/2009 | 200 |
| 4/24/2009 | 199 |
| 5/29/2009 | 196.9 |
| 6/26/2009 | 195.7 |
| 7/31/2009 | 193.4 |
| 8/28/2009 | 191.9 |
| 9/25/2009 | 190.4 |
| | |
| | |
| | |

| WS_ELEV 2009-10 | |
|---|---|
| 10/30/2009 | 188.90 |
| 11/27/2009 | 189.40 |
| 12/24/2009 | 189.80 |
| 1/30/2010 | 190.70 |
| 2/27/2010 | 192.00 |
| 3/26/2010 | 192.30 |
| 4/30/2010 | 197.40 |
| 5/25/2010 | 201.90 |
| 6/18/2010 | 204.50 |
| 8/27/2010 | 206.10 |
| 9/24/2010 | 204.40 |
| | |

| WS_ELEV 2010-11 | |
|---|---|
| 10/2/2010 | 205.30 |
| 11/6/2010 | 207.70 |
| 12/4/2010 | 209.00 |
| 1/8/2011 | 217.90 |
| 2/4/2011 | 224.50 |
| 3/4/2011 | 226.00 |
| 4/1/2011 | 228.50 |
| 5/6/2011 | 232.00 |
| | |
| 7/1/2011 | 234.10 |
| 8/5/2011 | 233.50 |
| 9/2/2011 | 235.30 |
| | |

| WS_ELEV 2011-12 | |
|---|---|
| 10/21/2011 | 236.2 |
| 11/18/2011 | 236.8 |
| 12/17/2011 | 236.4 |
| 1/21/2012 | 233.9 |
| 2/17/2012 | 231.8 |
| 3/17/2012 | 229.5 |
| 4/21/2012 | 227.2 |
| 5/18/2012 | 224.8 |
| 6/22/2012 | 221.5 |
| 7/20/2012 | 218.6 |
| 8/24/2012 | 215.3 |
| 9/21/2012 | 213.1 |
| | |

| WS_ELEV 2012-13 | |
|---|---|
| 10/19/2012 | 211.8 |
| 11/16/2012 | 213.2 |
| 12/21/2012 | 214.1 |
| 1/18/2013 | 213.6 |
| 2/15/2013 | 212.6 |
| 3/22/2013 | 211.3 |
| 4/19/2013 | 209.5 |
| 5/17/2013 | 206.8 |
| 6/20/2013 | 204.1 |
| 7/19/2013 | 201.6 |
| 8/16/2013 | 199.1 |
| 9/20/2013 | 196.9 |
| | |

| WS_ELEV 2013-14 | |
|---|---|
| 10/12/2013 | 194.6 |
| 11/2/2013 | 194.9 |
| 12/13/2013 | 196.8 |
| 1/17/2014 | 196.8 |
| 2/15/2014 | 195.8 |
| 3/14/2014 | 194.5 |
| 4/12/2014 | 192.9 |
| 5/17/2014 | 190.1 |
| 6/14/2014 | 188.1 |
| 7/11/2014 | 186.1 |
| 8/15/2014 | 183.9 |
| 9/12/2014 | 182.4 |
| | |

| WS_ELEV 2014-15 | |
|---|---|
| 10/3/2014 | 182.5 |
| 11/15/2014 | 180.9 |
| 12/12/2014 | 180.4 |
| 1/16/2015 | 180.9 |
| 2/13/2015 | 180.6 |
| 3/13/2015 | 180.2 |
| 4/10/2015 | 179.7 |
| 5/16/2015 | 178.9 |
| 6/13/2015 | 178.4 |
| 7/18/2015 | 177 |
| 8/15/2015 | 176.1 |
| 9/18/2015 | 175.1 |
| | |

| WS_ELEV 2015-16 | |
|---|---|
| 10/16/2015 | 174.6 |
| 11/19/2015 | 174.5 |
| 12/18/2015 | 175.9 |
| 1/17/2016 | 179.4 |
| 2/13/2016 | 179.3 |
| 3/18/2016 | 178.5 |
| 4/16/2016 | 177.8 |
| 5/13/2016 | 176.7 |
| 6/17/2016 | 174.2 |
| 7/15/2016 | 173.4 |
| 8/19/2016 | 173 |
| 9/17/2016 | 172.7 |
| | |

# WATER CONSERVATION – WELL MEASUREMENT – GROUND WATER

**Reading for well No.** 3030F
**State Well No.** 1S10W07R02
**Latitude:** 34-05-34 **Longitude:** 117-57-46 **Thomas Guide Page:** 598 C4

| WS_ELEV 2016-17 | |
|---|---|
| 10/14/2016 | 172.9 |
| 11/18/2016 | 175.5 |
| 12/16/2016 | 178.7 |
| 1/13/2017 | 180.6 |
| 2/16/2017 | 181.8 |
| 3/17/2017 | 182.7 |
| 4/21/2017 | 183.1 |
| 5/13/2017 | 182.8 |
| 6/17/2017 | 180.6 |
| 7/14/2017 | 178.5 |
| 8/19/2017 | 177.4 |
| 9/15/2017 | 180.3 |
| | |

| WS_ELEV 2017-18 | |
|---|---|
| 10/20/2017 | 182.7 |
| 11/17/2017 | 182.4 |
| 12/22/2017 | 180.7 |
| 1/19/2018 | 180.9 |
| 2/16/2018 | 182.8 |
| 3/23/2018 | 181.8 |
| 4/20/2018 | 181 |
| 5/18/2018 | 180.2 |
| 6/23/2018 | 178.1 |
| 7/20/2018 | 176 |
| 8/17/2018 | 173.5 |
| 9/22/2018 | 171.1 |
| | |

| WS_ELEV 2018-19 | |
|---|---|
| 10/6/2018 | 170.4 |
| 11/3/2018 | 169.1 |
| 12/8/2018 | 170.8 |
| 1/4/2019 | 175.9 |
| 2/1/2019 | 178.4 |
| 3/2/2019 | 179.3 |
| 4/5/2019 | 191.4 |
| 5/4/2019 | 195.4 |
| 6/7/2019 | 195.7 |
| 7/6/2019 | 195.6 |
| 8/2/2019 | 198.8 |
| 9/6/2019 | 207.7 |
| | |

| WS_ELEV 2019-20 | |
|---|---|
| 10/4/2019 | 209.9 |
| 11/2/2019 | 211.1 |
| 12/6/2019 | 211.4 |
| 1/3/2020 | 211.7 |
| 2/6/2020 | 210.6 |
| 3/5/2020 | 208.1 |
| 4/2/2020 | 206.6 |
| 5/8/2020 | 204.6 |
| 6/5/2020 | 202.9 |
| 7/2/2020 | 202.6 |
| 8/8/2020 | 203.7 |
| 9/5/2020 | 202.1 |
| | |

# WATER CONSERVATION – WELL MEASUREMENT – GROUND WATER

**Reading for well No.** 3261P
**State Well No.** 1S08W17K02
**Latitude:** 34-04-52 **Longitude:** 117-44-24 **Thomas Guide Page:** 601 A5

| WS_ELEV 1995-96 | |
|---|---|
| 10/16/1995 | 935.80 |
| 11/7/1995 | 942.60 |
| 12/18/1995 | 945.60 |
| 1/10/1996 | 920.90 |
| 2/13/1996 | 947.70 |
| 3/12/1996 | 938.60 |
| 4/9/1996 | 931.90 |
| 5/14/1996 | 918.30 |
| 6/5/1996 | 913.20 |
| 7/16/1996 | 927.00 |
| 8/21/1996 | 929.10 |

| WS_ELEV 1996-97 | |
|---|---|
| 10/21/1996 | 911.80 |
| 11/18/1996 | 945.90 |
| 12/16/1996 | 949.40 |
| 1/21/1997 | 957.00 |
| 2/18/1997 | 961.40 |
| 3/12/1997 | 960.30 |
| 4/9/1997 | 956.80 |
| 5/13/1997 | 960.50 |
| 6/11/1997 | 960.60 |
| 7/14/1997 | 957.60 |
| 8/19/1997 | 960.50 |
| 9/16/1997 | 950.50 |

| WS_ELEV 1997-98 | |
|---|---|
| 10/20/1997 | 957.80 |
| 11/18/1997 | 958.00 |
| 2/11/1998 | 960.20 |
| 3/17/1998 | 965.50 |
| 4/14/1998 | 959.40 |
| 5/19/1998 | 965.50 |
| 6/17/1998 | 953.40 |
| 7/21/1998 | 965.00 |
| 8/17/1998 | 962.30 |

| WS_ELEV 1998-99 | |
|---|---|
| 11/17/1998 | 966.40 |
| 12/16/1998 | 971.50 |
| 1/12/1999 | 973.00 |
| 2/17/1999 | 974.70 |
| 3/16/1999 | 970.50 |
| 4/21/1999 | 974.40 |
| 5/10/1999 | 974.00 |
| 7/14/1999 | 974.70 |
| 9/22/1999 | 974.60 |

| WS_ELEV 1999-00 | |
|---|---|
| 1/26/2000 | 938.20 |
| 2/15/2000 | Dry |
| 3/20/2000 | 979.30 |
| 4/25/2000 | 977.80 |
| 5/31/2000 | 974.90 |
| 6/27/2000 | 973.00 |
| 7/24/2000 | 972.70 |
| 8/15/2000 | 971.30 |
| 9/19/2000 | 970.40 |

| WS_ELEV 2000-01 | |
|---|---|
| 10/17/2000 | 971.10 |
| 12/26/2000 | 974.30 |
| 1/17/2001 | 974.10 |
| 3/28/2001 | 973.50 |
| 4/16/2001 | 973.00 |
| 9/17/2001 | 968.50 |

| WS_ELEV 2001-02 | |
|---|---|
| 10/22/2001 | 967.90 |
| 5/23/2002 | 963.10 |
| 6/15/2002 | 965.70 |
| 7/29/2002 | 965.90 |

| WS_ELEV 2002-03 | |
|---|---|
| 11/12/2002 | 963.40 |

| WS_ELEV 2003-04 | |
|---|---|
| 11/19/2003 | 959.90 |
| 4/8/2004 | 956.90 |

| WS_ELEV 2004-05 | |
|---|---|
| 10/6/2004 | 955.20 |
| 3/28/2005 | 948.40 |

| WS_ELEV 2005-06 | |
|---|---|
| 10/21/2005 | 918.90 |
| 3/8/2006 | 878.30 |
| 9/28/2006 | 767.20 |

| WS_ELEV 2006-07 | |
|---|---|
| 12/18/2006 | Dry |
| 5/9/2007 | 905.20 |

# WATER CONSERVATION – WELL MEASUREMENT – GROUND WATER

**Reading for well No.** 3261P
**State Well No.** 1S08W17K02
**Latitude:** 34-04-52 **Longitude:** 117-44-24 **Thomas Guide Page:** 601 A5

| WS_ELEV 2007-08 | |
|---|---|
| 10/8/2007 | 753.40 |
| 4/8/2008 | 950.90 |

| WS_ELEV 2008-09 | |
|---|---|
| 4/27/2009 | 950.9 |
| 9/28/2009 | 741.9 |

| WS_ELEV 2009-10 | |
|---|---|
| 5/12/2010 | 918.2 |

| WS_ELEV 2010-11 | |
|---|---|
| 9/22/2011 | 737.2 |

| WS_ELEV 2011-12 | |
|---|---|
| 12/19/2011 | 934.8 |
| 11/13/2012 | 922.9 |

| WS_ELEV 2012-13 | |
|---|---|
| 11/13/2012 | 922.9 |
| 4/17/2013 | 900.9 |
| 10/17/2013 | 895 |

| WS_ELEV 2013-14 | |
|---|---|
| 10/17/2013 | 895 |

| WS_ELEV 2014-15 | |
|---|---|

| WS_ELEV 2015-16 | |
|---|---|

# WATER CONSERVATION – WELL MEASUREMENT – GROUND WATER

**Reading for well No.** 3261P
**State Well No.** 1S08W17K02
**Latitude:** 34-04-52 **Longitude:** 117-44-24 **Thomas Guide Page:** 601 A5

| WS_ELEV 2016-17 | |
|---|---|
| | |
| | |
| | |
| | |
| | |
| | |
| | |
| | |
| | |
| | |
| | |
| | |

| WS_ELEV 2017-18 | |
|---|---|
| 10/17/2013 | 895 |
| 11/30/2017 | 861.9 |
| | |
| | |
| | |
| | |
| | |
| | |
| | |
| | |
| | |
| | |

| WS_ELEV 2018-19 | |
|---|---|
| 11/1/2018 | 886.1 |
| 3/1/2019 | 899.9 |
| 9/1/2019 | 883.9 |
| | |
| | |
| | |
| | |
| | |
| | |
| | |
| | |
| | |
| | |

| WS_ELEV 2019-20 | |
|---|---|
| 9/1/2019 | 883.9 |
| 5/1/2020 | 899.3 |
| | |
| | |
| | |
| | |
| | |
| | |
| | |
| | |
| | |
| | |

# WATER CONSERVATION – WELL MEASUREMENT – GROUND WATER

**Reading for well No.** 3600H
**State Well No.** 1N16W16G05
**Latitude:** 34-11-57 **Longitude:** 118-35-39 **Thomas Guide Page:** 530 B5

| WS_ELEV 1995-96 | |
|---|---|
| 10/6/1995 | 774.00 |
| 3/1/1996 | 773.80 |
| 5/2/1996 | 773.70 |

| WS_ELEV 1996-97 | |
|---|---|
| 4/1/1997 | 773.50 |

| WS_ELEV 1997-98 | |
|---|---|

| WS_ELEV 1998-99 | |
|---|---|
| 4/10/1999 | 775.50 |

| WS_ELEV 1999-00 | |
|---|---|
| 10/23/1999 | 774.70 |

| WS_ELEV 2000-01 | |
|---|---|
| 3/17/2001 | 775.20 |

| WS_ELEV 2001-02 | |
|---|---|

| WS_ELEV 2002-03 | |
|---|---|

| WS_ELEV 2003-04 | |
|---|---|

| WS_ELEV 2004-05 | |
|---|---|

| WS_ELEV 2005-06 | |
|---|---|

| WS_ELEV 2006-07 | |
|---|---|
| 12/15/2006 | 887.50 |
| 1/6/2007 | 887.50 |
| 4/27/2007 | 887.50 |
| 9/28/2007 | 788.50 |

# WATER CONSERVATION – WELL MEASUREMENT – GROUND WATER

**Reading for well No.** 3600H
**State Well No.** 1N16W16G05
**Latitude:** 34-11-57 **Longitude:** 118-35-39 **Thomas Guide Page:** 530 B5

| WS_ELEV 2007-08 | |
|---|---|
| | |
| | |
| | |
| | |
| | |
| | |
| | |
| | |
| | |
| | |
| | |
| | |
| | |

| WS_ELEV 2008-09 | |
|---|---|
| 9/17/2009 | 465.30 |
| | |
| | |
| | |
| | |
| | |
| | |
| | |
| | |
| | |
| | |
| | |
| | |

| WS_ELEV 2009-10 | |
|---|---|
| | |
| | |
| | |
| | |
| | |
| | |
| | |
| | |
| | |
| | |
| | |
| | |
| | |

| WS_ELEV 2010-11 | |
|---|---|
| | |
| | |
| | |
| | |
| | |
| | |
| | |
| | |
| | |
| | |
| | |
| | |
| | |

| WS_ELEV 2011-12 | |
|---|---|
| | |
| | |
| | |
| | |
| | |
| | |
| | |
| | |
| | |
| | |
| | |
| | |
| | |

| WS_ELEV 2012-13 | |
|---|---|
| | |
| | |
| | |
| | |
| | |
| | |
| | |
| | |
| | |
| | |
| | |
| | |
| | |

| WS_ELEV 2013-14 | |
|---|---|
| | |
| | |
| | |
| | |
| | |
| | |
| | |
| | |
| | |
| | |
| | |
| | |
| | |

| WS_ELEV 2014-15 | |
|---|---|
| | |
| | |
| | |
| | |
| | |
| | |
| | |
| | |
| | |
| | |
| | |
| | |
| | |

| WS_ELEV 2015-16 | |
|---|---|
| | |
| | |
| | |
| | |
| | |
| | |
| | |
| | |
| | |
| | |
| | |
| | |
| | |

# WATER CONSERVATION – WELL MEASUREMENT – GROUND WATER

**Reading for well No.** 3600H
**State Well No.** 1N16W16G05
**Latitude:** 34-11-57 **Longitude:** 118-35-39 **Thomas Guide Page:** 530 B5

| WS_ELEV 2016-17 | |
|---|---|
| | |
| | |
| | |
| | |
| | |
| | |
| | |
| | |
| | |
| | |
| | |
| | |

| WS_ELEV 2017-18 | |
|---|---|
| | |
| | |
| | |
| | |
| | |
| | |
| | |
| | |
| | |
| | |
| | |
| | |

| WS_ELEV 2018-19 | |
|---|---|
| No Data | |
| | |
| | |
| | |
| | |
| | |
| | |
| | |
| | |
| | |
| | |
| | |

| WS_ELEV 2019-20 | |
|---|---|
| No Data | |
| | |
| | |
| | |
| | |
| | |
| | |
| | |
| | |
| | |
| | |
| | |

# WATER CONSERVATION – WELL MEASUREMENT – GROUND WATER

**Reading for well No.** 3872H
**State Well No.** 1N14W14F05
**Latitude:** 34-10-20 **Longitude:** 118-19-18 **Thomas Guide Page:** 563 F1

| WS_ELEV 1995-96 | |
|---|---|
| 10/23/1995 | 476.60 |
| 11/28/1995 | 485.60 |
| 12/19/1995 | 477.30 |
| 1/17/1996 | 476.70 |
| 2/28/1996 | 483.40 |
| 3/19/1996 | 484.10 |
| 4/22/1996 | 483.30 |
| 5/15/1996 | 477.20 |
| 6/12/1996 | 475.90 |
| 7/22/1996 | 474.90 |
| 8/20/1996 | 474.60 |
| 9/17/1996 | 473.40 |

| WS_ELEV 1996-97 | |
|---|---|
| 10/28/1996 | 482.00 |
| 11/26/1996 | 475.40 |
| 12/30/1996 | 478.20 |
| 1/18/1997 | 483.10 |
| 3/12/1997 | 483.10 |
| 4/9/1997 | 483.20 |
| 5/7/1997 | 474.70 |
| 6/18/1997 | 477.60 |
| 8/12/1997 | 478.00 |
| 9/9/1997 | 471.10 |

| WS_ELEV 1997-98 | |
|---|---|
| 12/16/1997 | 477.90 |
| 1/26/1998 | 478.60 |
| 2/25/1998 | 478.60 |
| 3/24/1998 | 479.80 |
| 4/20/1998 | 471.00 |
| 5/13/1998 | 470.70 |
| 6/10/1998 | 471.30 |
| 7/20/1998 | 472.90 |
| 8/18/1998 | 471.20 |
| 9/9/1998 | 475.20 |

| WS_ELEV 1998-99 | |
|---|---|
| 10/21/1998 | 471.60 |
| 11/23/1998 | 471.60 |
| 12/28/1998 | 480.50 |
| 3/16/1999 | 480.00 |
| 4/26/1999 | 479.40 |
| 5/25/1999 | 472.90 |
| 6/15/1999 | 469.90 |
| 7/26/1999 | 466.20 |
| 8/17/1999 | 469.70 |
| 9/28/1999 | 463.10 |

| WS_ELEV 1999-00 | |
|---|---|
| 12/21/1999 | 465.30 |
| 1/26/2000 | 468.60 |
| 2/15/2000 | 468.20 |
| 3/27/2000 | 467.90 |
| 5/23/2000 | 457.70 |
| 6/19/2000 | 456.50 |
| 8/16/2000 | 464.80 |

| WS_ELEV 2000-01 | |
|---|---|
| 10/17/2000 | 455.50 |
| 11/14/2000 | 454.60 |
| 12/27/2000 | 454.90 |
| 1/30/2001 | 454.10 |
| 2/28/2001 | 454.50 |
| 3/27/2001 | 463.70 |
| 4/17/2001 | 458.80 |
| 6/11/2001 | 463.90 |
| 7/16/2001 | 463.70 |
| 8/13/2001 | 463.40 |
| 9/11/2001 | 462.70 |

| WS_ELEV 2001-02 | |
|---|---|
| 10/15/2001 | 462.60 |
| 11/13/2001 | 462.40 |
| 12/26/2001 | 462.40 |
| 1/15/2002 | 462.90 |
| 2/13/2002 | 463.10 |
| 3/27/2002 | 462.90 |
| 4/15/2002 | 462.60 |
| 7/29/2002 | 461.40 |
| 9/25/2002 | 460.60 |

| WS_ELEV 2002-03 | |
|---|---|
| 10/21/2002 | 460.40 |
| 12/20/2002 | 460.00 |
| 1/29/2003 | 459.50 |
| 6/25/2003 | 458.90 |
| 7/8/2003 | 458.80 |
| 8/18/2003 | 458.30 |
| 9/16/2003 | 457.80 |

| WS_ELEV 2003-04 | |
|---|---|
| 10/22/2003 | 457.20 |
| 11/24/2003 | 456.80 |
| 12/24/2003 | 456.80 |
| 1/14/2004 | 456.30 |
| 2/18/2004 | 455.40 |
| 3/29/2004 | 455.70 |
| 4/27/2004 | 455.90 |
| 5/19/2004 | 455.30 |
| 7/21/2004 | 454.80 |
| 9/21/2004 | 453.30 |

| WS_ELEV 2004-05 | |
|---|---|
| 10/13/2004 | 453.60 |
| 11/17/2004 | 452.80 |
| 12/20/2004 | 453.30 |
| 3/7/2005 | 454.10 |
| 4/25/2005 | 455.70 |
| 5/23/2005 | 454.80 |
| 6/15/2005 | 448.70 |
| 8/18/2005 | 458.70 |
| 9/21/2005 | 460.40 |

| WS_ELEV 2005-06 | |
|---|---|
| 10/24/2005 | 461.00 |
| 11/22/2005 | 462.40 |
| 12/20/2005 | 462.40 |
| 1/17/2006 | 463.40 |
| 2/21/2006 | 464.00 |
| 4/4/2006 | 464.00 |
| 6/14/2006 | 465.90 |
| 7/24/2006 | 466.00 |
| 8/21/2006 | 466.10 |
| 9/14/2006 | 466.20 |

| WS_ELEV 2006-07 | |
|---|---|
| 10/17/2006 | 465.70 |
| 11/20/2006 | 466.70 |
| 12/27/2006 | 466.10 |
| 1/23/2007 | 466.20 |
| 2/20/2007 | 468.10 |
| 3/21/2007 | 468.20 |
| 4/18/2007 | 467.80 |
| 5/23/2007 | 467.60 |
| 6/19/2007 | 467.40 |

# WATER CONSERVATION – WELL MEASUREMENT – GROUND WATER

**Reading for well No.** 3872H
**State Well No.** 1N14W14F05
**Latitude:** 34-10-20 **Longitude:** 118-19-18 **Thomas Guide Page:** 563 F1

| WS_ELEV 2007-08 | |
|---|---|
| 5/27/2008 | 468.80 |
| 7/1/2008 | 469.90 |
| | |
| | |
| | |
| | |
| | |
| | |
| | |
| | |
| | |
| | |

| WS_ELEV 2008-09 | |
|---|---|
| 09/30/2008 | 466.5 |
| 11/25/2008 | 466.0 |
| 1/7/2009 | 468.2 |
| 02/25/2009 | 468 |
| 04/29/2009 | 468.2 |
| 05/26/2009 | 467.3 |
| 06/29/2009 | 466 |
| 07/30/2009 | 466.5 |
| 8/26/2009 | 465.80 |
| 9/17/2009 | 465.60 |
| | |
| | |

| WS_ELEV 2009-10 | |
|---|---|
| 10/21/2009 | 465 |
| 11/12/2009 | 465.1 |
| 12/15/2009 | 465.2 |
| 1/11/2010 | 465 |
| 2/22/2010 | 465.7 |
| 3/18/2010 | 466.1 |
| 4/22/2010 | 466.2 |
| 5/24/2010 | 465.9 |
| 6/14/2010 | 465.7 |
| 9/13/2010 | 464.2 |
| | |
| | |

| WS_ELEV 2010-11 | |
|---|---|
| | |
| | |
| | |
| | |
| | |
| | |
| | |
| | |
| | |
| | |
| | |
| | |

| WS_ELEV 2011-12 | |
|---|---|
| | |
| | |
| | |
| | |
| | |
| | |
| | |
| | |
| | |
| | |
| | |
| | |

| WS_ELEV 2012-13 | |
|---|---|
| | |
| | |
| | |
| | |
| | |
| | |
| | |
| | |
| | |
| | |
| | |
| | |

| WS_ELEV 2013-14 | |
|---|---|
| 10/29/2013 | 470.3 |
| 11/6/2013 | 470.3 |
| 12/11/2013 | 470.6 |
| 1/22/2014 | 470.4 |
| 2/18/2014 | 470.3 |
| 3/13/2014 | 470.5 |
| 4/15/2014 | 470.3 |
| 5/12/2014 | 470.1 |
| 6/26/2014 | 469.9 |
| 7/21/2014 | 470 |
| 8/26/2014 | 469.3 |
| 9/25/2014 | 468.8 |

| WS_ELEV 2014-15 | |
|---|---|
| 10/20/2014 | 468.4 |
| 11/13/2014 | 468.3 |
| 12/18/2014 | 468.1 |
| 1/27/2015 | 468.4 |
| 2/17/2015 | 467.7 |
| 3/19/2015 | 467.2 |
| 4/16/2015 | 466.8 |
| 5/19/2015 | 466.6 |
| 6/11/2015 | 465.6 |
| 8/19/2015 | 465.5 |
| 9/22/2015 | 465.3 |
| | |

| WS_ELEV 2015-16 | |
|---|---|
| 2/25/2016 | 462.7 |
| | |
| | |
| | |
| | |
| | |
| | |
| | |
| | |
| | |
| | |
| | |

# WATER CONSERVATION – WELL MEASUREMENT – GROUND WATER

**Reading for well No.** 3872H
**State Well No.** 1N14W14F05
**Latitude:** 34-10-20 **Longitude:** 118-19-18 **Thomas Guide Page:** 563 F1

| WS_ELEV 2016-17 | |
|---|---|
| 3/28/2017 | 456.8 |
| 4/18/2017 | 456.7 |
| 5/18/2017 | 456.1 |
| 6/6/2017 | 455.8 |
| 7/17/2017 | 455.8 |
| 8/28/2017 | 455.4 |
| 9/26/2017 | 455.4 |
| | |
| | |
| | |
| | |
| | |

| WS_ELEV 2017-18 | |
|---|---|
| | |
| | |
| | |
| | |
| | |
| | |
| | |
| | |
| | |
| | |
| | |

| WS_ELEV 2018-19 | |
|---|---|
| 8/16/2018 | 455 |
| 4/11/2019 | 455.7 |
| 6/27/2019 | 455.9 |
| | |
| | |
| | |
| | |
| | |
| | |
| | |
| | |
| | |

| WS_ELEV 2019-20 | |
|---|---|
| 11/25/2019 | 455.2 |
| 2/27/2020 | 457.8 |
| 4/16/2020 | 458 |
| 5/27/2020 | 457.9 |
| 7/22/2020 | 457.8 |
| | |
| | |
| | |
| | |
| | |
| | |
| | |

# WATER CONSERVATION – WELL MEASUREMENT – GROUND WATER

**Reading for well No.** 4057H
**State Well No.** 1N12W33G01
**Latitude:** 34-07-43 **Longitude:** 118-08-34 **Thomas Guide Page:** 565 J7

| WS_ELEV 1995-96 | |
|---|---|
| 10/16/1995 | 613.20 |
| 12/20/1995 | 613.70 |
| 1/17/1996 | 613.90 |
| 2/25/1996 | 614.20 |
| 3/20/1996 | 614.40 |
| 4/22/1996 | 614.50 |
| 5/15/1996 | 614.80 |
| 6/11/1996 | 615.00 |
| 7/23/1996 | 615.10 |
| 8/19/1996 | 616.20 |
| 9/17/1996 | 615.10 |
| | |

| WS_ELEV 1996-97 | |
|---|---|
| 10/28/1996 | 614.70 |
| 11/20/1996 | 614.80 |
| 12/30/1996 | 614.40 |
| 1/29/1997 | 614.50 |
| 2/24/1997 | 614.60 |
| 3/18/1997 | 614.50 |
| 4/15/1997 | 614.80 |
| 5/12/1997 | 614.90 |
| 6/1/1997 | 615.10 |
| 7/28/1997 | 586.70 |
| 8/18/1997 | 615.20 |
| 9/17/1997 | 615.10 |

| WS_ELEV 1997-98 | |
|---|---|
| 12/16/1997 | 614.90 |
| 1/21/1998 | 614.70 |
| 2/12/1998 | 614.80 |
| 3/23/1998 | 614.90 |
| 5/1/1998 | 615.20 |
| 6/24/1998 | 615.40 |
| 7/28/1998 | 615.50 |
| 8/24/1998 | 615.40 |
| 9/21/1998 | 615.10 |
| | |
| | |
| | |

| WS_ELEV 1998-99 | |
|---|---|
| 10/26/1998 | 614.70 |
| 11/30/1998 | 614.40 |
| 12/28/1998 | 614.10 |
| 1/20/1999 | 613.80 |
| 2/15/1999 | 613.40 |
| 3/16/1999 | 613.50 |
| 4/27/1999 | 613.50 |
| 5/26/1999 | 613.10 |
| 6/29/1999 | 613.10 |
| 7/19/1999 | 612.90 |
| 8/16/1999 | 612.80 |
| 9/30/1999 | 612.90 |

| WS_ELEV 1999-00 | |
|---|---|
| | |
| | |
| | |
| | |
| | |
| | |
| | |
| | |
| | |
| | |
| | |
| | |

| WS_ELEV 2000-01 | |
|---|---|
| 1/30/2001 | 613.40 |
| 2/28/2001 | 613.60 |
| 3/27/2001 | 613.90 |
| 4/17/2001 | 613.90 |
| 6/11/2001 | 615.50 |
| 7/16/2001 | 686.70 |
| 8/14/2001 | 615.30 |
| 9/12/2001 | 615.50 |
| | |
| | |
| | |
| | |

| WS_ELEV 2001-02 | |
|---|---|
| 10/17/2001 | 615.30 |
| 12/31/2001 | 615.60 |
| 1/15/2002 | 615.60 |
| 2/12/2002 | 615.60 |
| 3/18/2002 | 616.00 |
| 4/10/2002 | 616.10 |
| 5/16/2002 | 664.90 |
| 7/7/2002 | 617.40 |
| 9/25/2002 | 618.60 |
| | |
| | |
| | |

| WS_ELEV 2002-03 | |
|---|---|
| 12/17/2002 | 620.40 |
| 1/15/2003 | 620.70 |
| 6/10/2003 | 623.90 |
| 7/8/2003 | 624.50 |
| 8/19/2003 | 622.30 |
| 9/15/2003 | 625.80 |
| | |
| | |
| | |
| | |
| | |
| | |

| WS_ELEV 2003-04 | |
|---|---|
| 10/14/2003 | 626.00 |
| 11/24/2003 | 626.50 |
| 12/24/2003 | 621.10 |
| 4/12/2004 | 629.00 |
| 5/10/2004 | 629.30 |
| | |
| | |
| | |
| | |
| | |
| | |
| | |

| WS_ELEV 2004-05 | |
|---|---|
| | |
| | |
| | |
| | |
| | |
| | |
| | |
| | |
| | |
| | |
| | |
| | |

| WS_ELEV 2005-06 | |
|---|---|
| | |
| | |
| | |
| | |
| | |
| | |
| | |
| | |
| | |
| | |
| | |
| | |

| WS_ELEV 2006-07 | |
|---|---|
| | |
| | |
| | |
| | |
| | |
| | |
| | |
| | |
| | |
| | |
| | |
| | |

# WATER CONSERVATION – WELL MEASUREMENT – GROUND WATER

**Reading for well No.** 4057H
**State Well No.** 1N12W33G01
**Latitude:** 34-07-43 **Longitude:** 118-08-34 **Thomas Guide Page:** 565 J7

| WS_ELEV 2007-08 | |
|---|---|
| 3/29/2008 | Dry |
| | |
| | |
| | |
| | |
| | |
| | |
| | |
| | |
| | |
| | |
| | |

| WS_ELEV 2008-09 | |
|---|---|
| | |
| | |
| | |
| | |
| | |
| | |
| | |
| | |
| | |
| | |
| | |
| | |

| WS_ELEV 2009-10 | |
|---|---|
| | |
| | |
| | |
| | |
| | |
| | |
| | |
| | |
| | |
| | |
| | |
| | |

| WS_ELEV 2010-11 | |
|---|---|
| | |
| | |
| | |
| | |
| | |
| | |
| | |
| | |
| | |
| | |
| | |
| | |

| WS_ELEV 2011-12 | |
|---|---|
| | |
| | |
| | |
| | |
| | |
| | |
| | |
| | |
| | |
| | |
| | |
| | |

| WS_ELEV 2012-13 | |
|---|---|
| | |
| | |
| | |
| | |
| | |
| | |
| | |
| | |
| | |
| | |
| | |
| | |

| WS_ELEV 2013-14 | |
|---|---|
| | |
| | |
| | |
| | |
| | |
| | |
| | |
| | |
| | |
| | |
| | |
| | |

| WS_ELEV 2014-15 | |
|---|---|
| | |
| | |
| | |
| | |
| | |
| | |
| | |
| | |
| | |
| | |
| | |
| | |

| WS_ELEV 2015-16 | |
|---|---|
| | |
| | |
| | |
| | |
| | |
| | |
| | |
| | |
| | |
| | |
| | |
| | |

# WATER CONSERVATION – WELL MEASUREMENT – GROUND WATER

**Reading for well No.** 4057H
**State Well No.** 1N12W33G01
**Latitude:** 34-07-43 **Longitude:** 118-08-34 **Thomas Guide Page:** 565 J7

| WS_ELEV 2016-17 | |
|---|---|
| | |
| | |
| | |
| | |
| | |
| | |
| | |
| | |
| | |
| | |
| | |
| | |

| WS_ELEV 2017-18 | |
|---|---|
| 10/19/2017 | 749.9 |
| | |
| | |
| | |
| | |
| | |
| | |
| | |
| | |
| | |
| | |
| | |

| WS_ELEV 2018-19 | |
|---|---|
| No Data | |
| | |
| | |
| | |
| | |
| | |
| | |
| | |
| | |
| | |
| | |
| | |

| WS_ELEV 2019-20 | |
|---|---|
| No Data | |
| | |
| | |
| | |
| | |
| | |
| | |
| | |
| | |
| | |
| | |
| | |

# WATER CONSERVATION – WELL MEASUREMENT – GROUND WATER

**Reading for well No.** 4284A
**State Well No.** 1N10W22P02
**Latitude:** 34-09-03 **Longitude:** 117-55-02 **Thomas Guide Page:** 568 H3

| WS_ELEV 1995-96 | |
|---|---|
| | |

| WS_ELEV 1996-97 | |
|---|---|
| | |

| WS_ELEV 1997-98 | |
|---|---|
| | |

| WS_ELEV 1998-99 | |
|---|---|
| 11/1/1998 | 607.00 |
| 4/1/1999 | |

| WS_ELEV 1999-00 | |
|---|---|
| 11/1/1999 | |
| 5/15/2000 | 646.10 |

| WS_ELEV 2000-01 | |
|---|---|
| 3/31/2001 | 621.00 |

| WS_ELEV 2001-02 | |
|---|---|
| 12/1/2001 | 631.00 |

| WS_ELEV 2002-03 | |
|---|---|
| | |

| WS_ELEV 2003-04 | |
|---|---|
| 11/1/2003 | 643.00 |
| 5/1/2004 | 612.00 |

| WS_ELEV 2004-05 | |
|---|---|
| | |

| WS_ELEV 2005-06 | |
|---|---|
| 4/1/2006 | 633.00 |

| WS_ELEV 2006-07 | |
|---|---|
| 12/1/2006 | 648.00 |
| 5/1/2007 | 592.20 |

# WATER CONSERVATION – WELL MEASUREMENT – GROUND WATER

**Reading for well No.** 4284A
**State Well No.** 1N10W22P02
**Latitude:** 34-09-03 **Longitude:** 117-55-02 **Thomas Guide Page:** 568 H3

| WS_ELEV 2007-08 | |
|---|---|
| 11/19/2007 | 559.00 |
| 5/1/2008 | 605.00 |

| WS_ELEV 2008-09 | |
|---|---|
| | |

| WS_ELEV 2009-10 | |
|---|---|
| 10/30/2009 | 643.50 |

| WS_ELEV 2010-11 | |
|---|---|
| | |

| WS_ELEV 2011-12 | |
|---|---|
| | |

| WS_ELEV 2012-13 | |
|---|---|
| | |

| WS_ELEV 2013-14 | |
|---|---|
| | |

| WS_ELEV 2014-15 | |
|---|---|
| | |

| WS_ELEV 2015-16 | |
|---|---|
| | |

# WATER CONSERVATION – WELL MEASUREMENT – GROUND WATER

**Reading for well No.** 4284A
**State Well No.** 1N10W22P02
**Latitude:** 34-09-03 **Longitude:** 117-55-02 **Thomas Guide Page:** 568 H3

| WS_ELEV 2016-17 | |
|---|---|
| | |
| | |
| | |
| | |
| | |
| | |
| | |
| | |
| | |
| | |
| | |
| | |

| WS_ELEV 2017-18 | |
|---|---|
| 11/22/2017 | 639.20 |
| | |
| | |
| | |
| | |
| | |
| | |
| | |
| | |
| | |
| | |
| | |

| WS_ELEV 2018-19 | |
|---|---|
| No Data | |
| | |
| | |
| | |
| | |
| | |
| | |
| | |
| | |
| | |
| | |
| | |

| WS_ELEV 2019-20 | |
|---|---|
| 8/6/2019 | 645.50 |
| 5/7/2020 | 630.30 |
| | |
| | |
| | |
| | |
| | |
| | |
| | |
| | |
| | |
| | |

# CUSTODIAN

**Unpublished information and data may be obtained by contacting:**

**County of Los Angeles Public Works**
**Stormwater Engineering Division**
**P.O. Box 1460**
**Alhambra, CA 91802-1460**
**(626) 458-6120**