SCALE: HOR. 1"= 40
VERT. 1"= 8

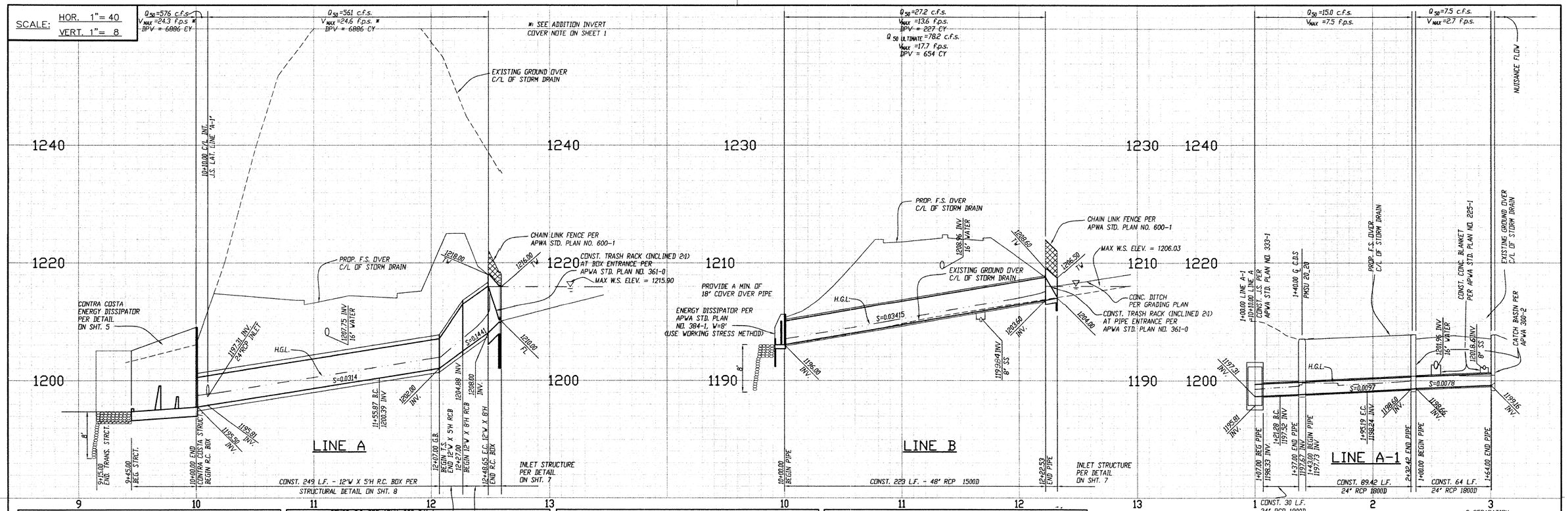

LOCATION	ELEV "A"	ELEV "B"	ELEV "C"	DIM "D"	PIPE ø
No. Tract – LAT "A-1"	1207.01	1197.67	1192.00	3'-11"	24" RCP

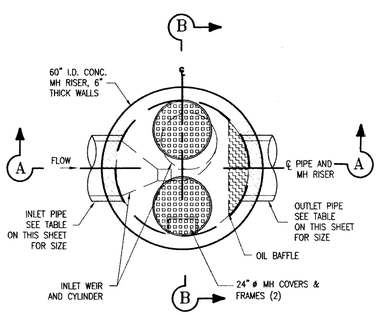

TOP PLAN VIEW

CDS MODEL PMSU20_20, 1.1 CFS CAPACITY STORM WATER TREATMENT UNIT

ALTA VISTA
RYE CANYON
SANTA CLARITA, CA

DATE 12/17/01 | DRAWN TJ | APPROV. | SCALE N.T.S. | SHEET 1

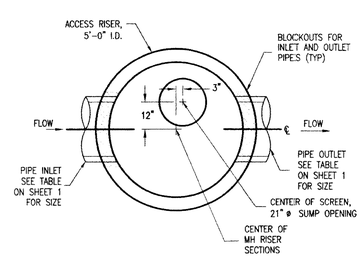

SEPARATION SLAB PLAN VIEW

CDS MODEL PMSU20_20, 1.1 CFS CAPACITY STORM WATER TREATMENT UNIT

ALTA VISTA
RYE CANYON
SANTA CLARITA, CA

DATE 12/17/01 | DRAWN TJ | APPROV. | SCALE N.T.S. | SHEET 2

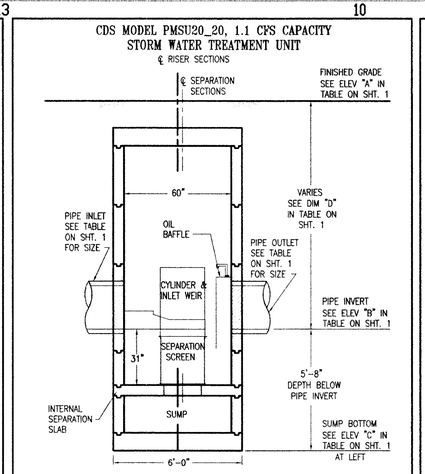

SECTION A-A

ALTA VISTA
RYE CANYON
SANTA CLARITA, CA

DATE 12/17/01 | DRAWN TJ | APPROV. | SCALE N.T.S. | SHEET 3

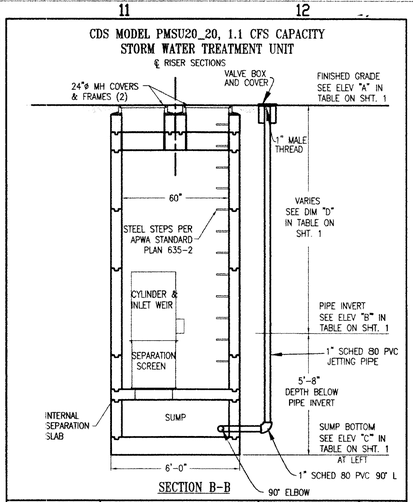

SECTION B-B

ALTA VISTA
RYE CANYON
SANTA CLARITA, CA

DATE 12/17/01 | DRAWN TJ | APPROV. | SCALE N.T.S. | SHEET 4

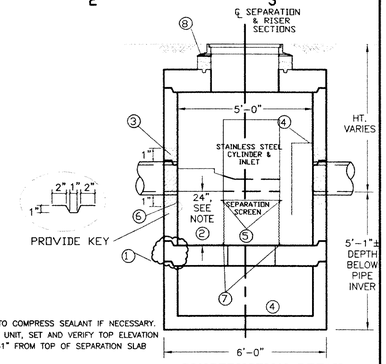

CONSTRUCTION DETAIL

CDS MODEL PMSU20_20
STORM WATER TREATMENT UNIT

CONSTRUCTION NOTES:

1. APPLY BUTYL MASTIC TO SEAL RISER JOINTS–APPLY LOAD TO MH SECTIONS TO COMPRESS SEALANT IF NECESSARY.
2. IF SEPARATION SLAB IS NON–INTEGRAL TO THE SEPARATION SECTION OF THE UNIT, SET AND VERIFY TOP ELEVATION BEFORE PLACING MORE PRECAST COMPONENTS OR BACKFILLING. ENSURE 31" FROM TOP OF SEPARATION SLAB TO PIPE INVERT.
3. GROUT PIPE CONNECTIONS TO SEAL JOINT.
4. SET BOTTOM OF OIL BAFFLE 14" ABOVE SEPARATION SLAB FLOOR; DRILL AND INSERT A MINIMUM OF TEN (10) 3/8" x 3 3/4" SS EXPANSION BOLTS @ 12" O.C. EQUALLY SPACED TO SECURE FIBERGLASS OIL BAFFLE FLANGE TO RISER WALL–(HARDWARE SUPPLIED BY CDS TECHNOLOGIES).
5. FASTEN FIBERGLASS CYLINDER/INLET TO SCREEN ASSEMBLY USING FOUR (4) SETS OF 1/2" x 1¾" SS HEX HEAD BOLTS W/ NUTS AND WASHERS–(HARDWARE SUPPLIED BY CDS TECHNOLOGIES). IN THE LEFT–HANDED CONFIGURATION THE "RED" COLORED FLANGE ON THE SCREEN CYLINDER SHALL FACE UP. IN THE RIGHT–HANDED CONFIGURATION, THE "GREEN" COLORED FLANGE SHALL FACE UP.
6. CENTER SCREEN ASSEMBLY OVER SUMP OPENING AND POSITION FIBERGLASS INLET AGAINST RISER WALL; DRILL AND INSERT A MINIMUM OF SIX (6) 3/8" x 3 3/4" SS ADHESIVE BOLTS EQUALLY SPACED TO SECURE FIBERGLASS INLET FLANGE TO RISER WALL–(HARDWARE SUPPLIED BY CDS TECHNOLOGIES).
7. VERIFY THAT SCREEN ASSEMBLY IS CENTERED OVER SUMP ACCESS HOLE AND ADJUST IF NECESSARY; FASTEN SCREEN TO SEPARATION SLAB USING FOUR (4) ⅜" x 3 ¾" SS EXPANSION BOLTS–(HARDWARE SUPPLIED BY CDS TECHNOLOGIES).
8. BLOCK AND GROUT SEAL TO MATCH GRADE AS REQUIRED.

PF512986

NO.	REVISION	REVISED BY	APPROVED BY	DATE

REVIEWED LAND DEVELOPMENT DIVISION
BY [signature] SUBDIVISION PLAN CHECKING SECTION 12/2/02 DATE

REGISTERED PROFESSIONAL ENGINEER EDWARD A. WAGSTAFF C 25119 EXP 12-31-02 CIVIL STATE OF CALIFORNIA
[signature] PROJECT ENGINEER 10/31/02 DATE

STORM DRAIN PLANS IN
D.S. NO. 508 P.D. No. 2530
COUNTY OF LOS ANGELES DEPARTMENT OF PUBLIC WORKS

PREPARED BY:
CROSBY MEAD BENTON & ASSOCIATES
Engineers • Planners • Surveyors
6345 Balboa Blvd. Suite 140
Encino, California 91316
(818) 343-5384

DWG | SHEET 4 OF 12

P:\0084.01 Rye Canyon–Alta Vista\Eng\Sd\Plan Set\SHT04.dwg 0084.01 Lusine Nidelian 14:26:07 08/02/02