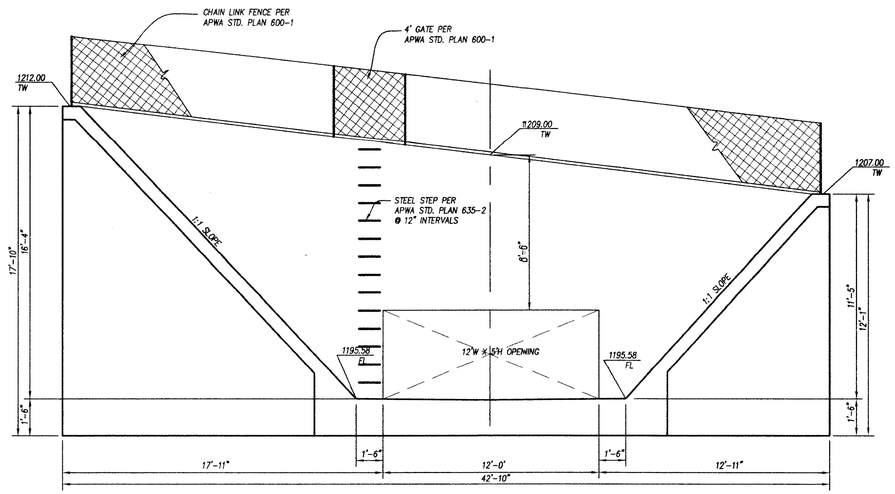

SECTION L-L

SCALE: 1/4"=1'-0"
NOTE: REINF. NOT SHOWN

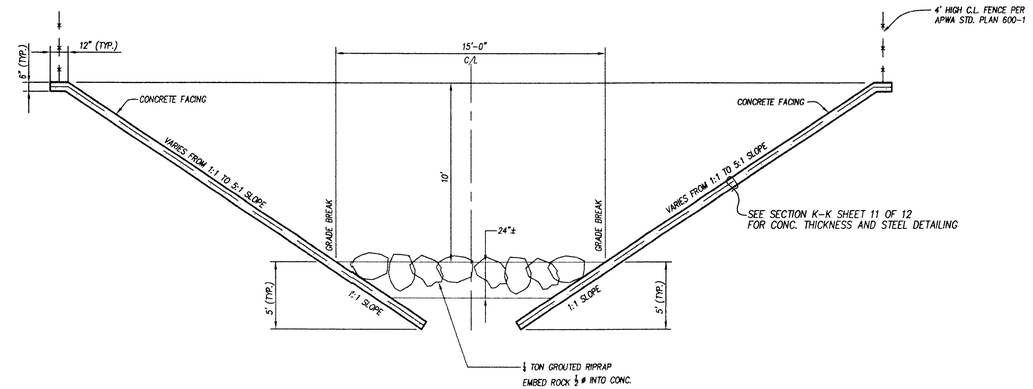

TRANSITION STRUCTURE DETAIL

SCALE: 1/4"=1'-0"
FROM STA 9+15.00 TO 9+45.00

"PF512988"

NO.	REVISION	REVISED BY	APPROVED BY	DATE

REVIEWED LAND DEVELOPMENT DIVISION
BY [signature] 12/2/02
SUBDIVISION PLAN CHECKING SECTION DATE

REGISTERED PROFESSIONAL ENGINEER EDWARD A. WAGSTAFF C 25119 EXP 12-31-05 CIVIL STATE OF CALIFORNIA

[signature] 10/31/02
PROJECT ENGINEER DATE

STORM DRAIN PLANS IN
D.S. NO. 508 P.D. No. 2530
COUNTY OF LOS ANGELES DEPARTMENT OF PUBLIC WORKS

PREPARED BY:
CROSBY MEAD BENTON & ASSOCIATES
Engineers • Planners • Surveyors
6345 Balboa Blvd. Suite 140
Encino, California 91316
(818) 343-5384

DWG SHEET 6 OF 12

P:\0084.01 Rye Canyon-Alta Vista\Eng\Sd\Plan Set\SHT06.dwg 0084.01 Lusine Nidelian 14:21:42 08/02/02