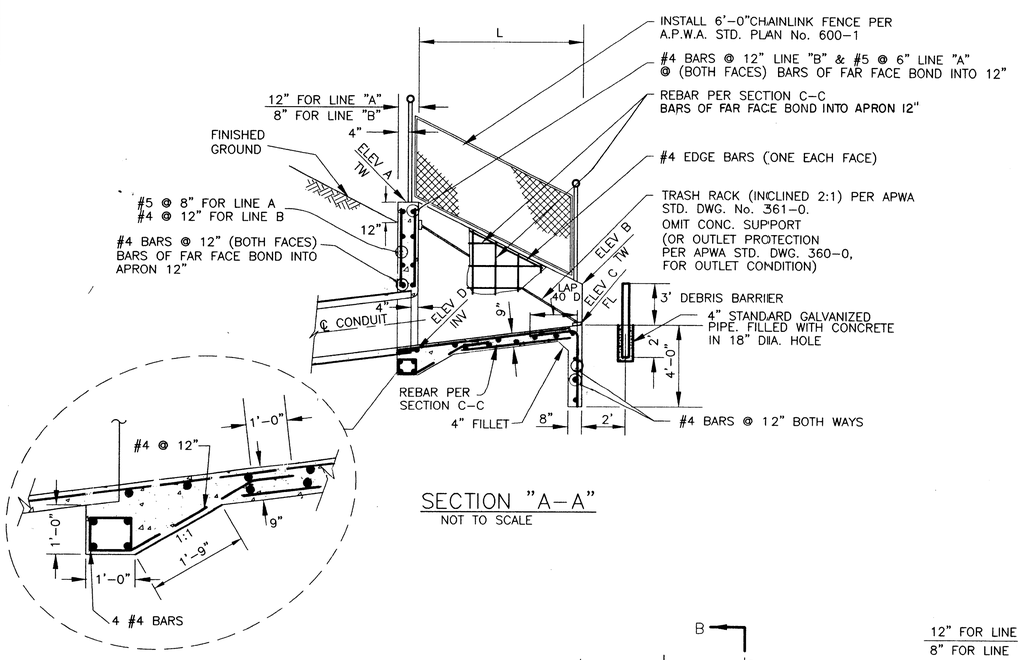

SECTION "A-A"
NOT TO SCALE

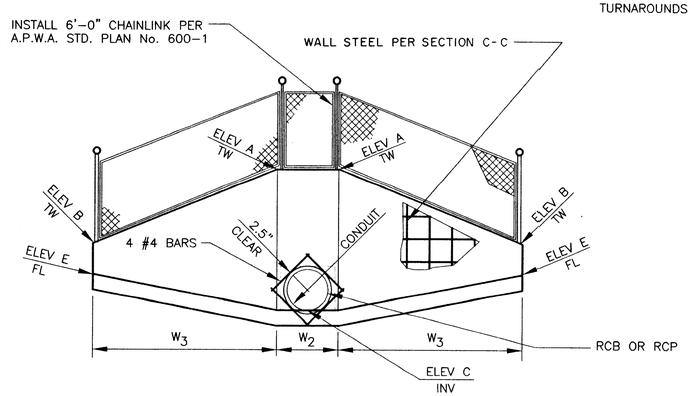

ELEVATION "B-B"
NOT TO SCALE

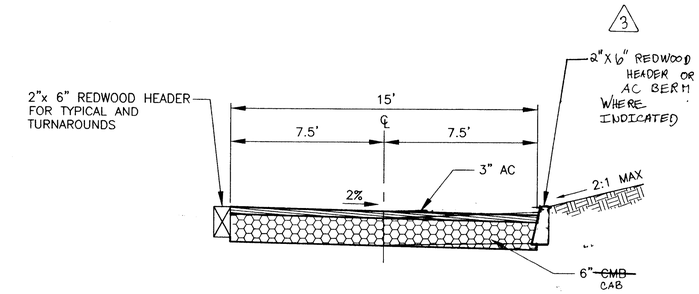

SERVICE ROAD SECTION
NOT TO SCALE

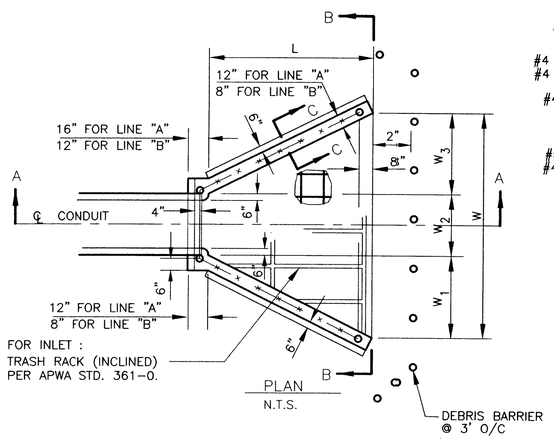

PLAN
N.T.S.

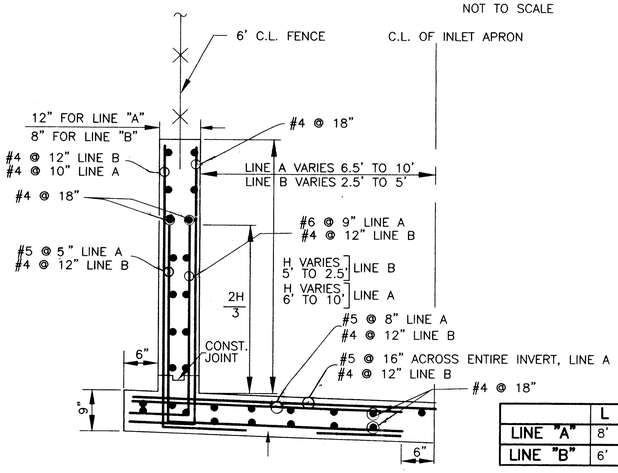

SECTION "C-C"
~LINES A & B
N.T.S.

INLET STRUCTURE
NOT TO SCALE

INLET STRUCTURE

	L	W	W1	W2	W3	ELEV A	ELEV B	ELEV C	ELEV D	ELEV E
LINE "A"	8'	20'	3.5'	13'	3.5'	1218.00	1216.00	1210.00	1208.00	1210.50
LINE "B"	6'	10'	2.5'	5'	2.5'	1208.60	1206.50	1204.00	1203.60	1204.50

REGISTERED PROFESSIONAL ENGINEER JAMES C. H. CHENG No. C32894 Exp. 06/06 CIVIL STATE OF CALIFORNIA

"PF512989"

NO.	REVISION	REVISED BY	APPROVED BY	DATE
3	MODIFICATIONS TO ACCESS ROAD	EGW	B Hunt	8/18/03

REVIEWED LAND DEVELOPMENT DIVISION
BY B Hunt 12/2/02
SUBDIVISION PLAN CHECKING SECTION DATE

REGISTERED PROFESSIONAL ENGINEER EDWARD G. WEBB C 25319 Exp. 12-31-03 CIVIL STATE OF CALIFORNIA
PROJECT ENGINEER 10/31/02 DATE

STORM DRAIN PLANS IN
D.S. NO. 508 P.D. No. 2530
COUNTY OF LOS ANGELES DEPARTMENT OF PUBLIC WORKS

PREPARED BY:
CROSBY MEAD BENTON & ASSOCIATES
Engineers • Planners • Surveyors
6345 Balboa Blvd. Suite 140
Encino, California 91316
(818) 343-5384

DWG
SHEET 7 OF 12

P:\0084.01 Rye Canyon-Alta Vista\Eng\Sd\Plan Set\SH107.dwg 0084.01 Lusine Nidelion 14:20:15 08/02/02