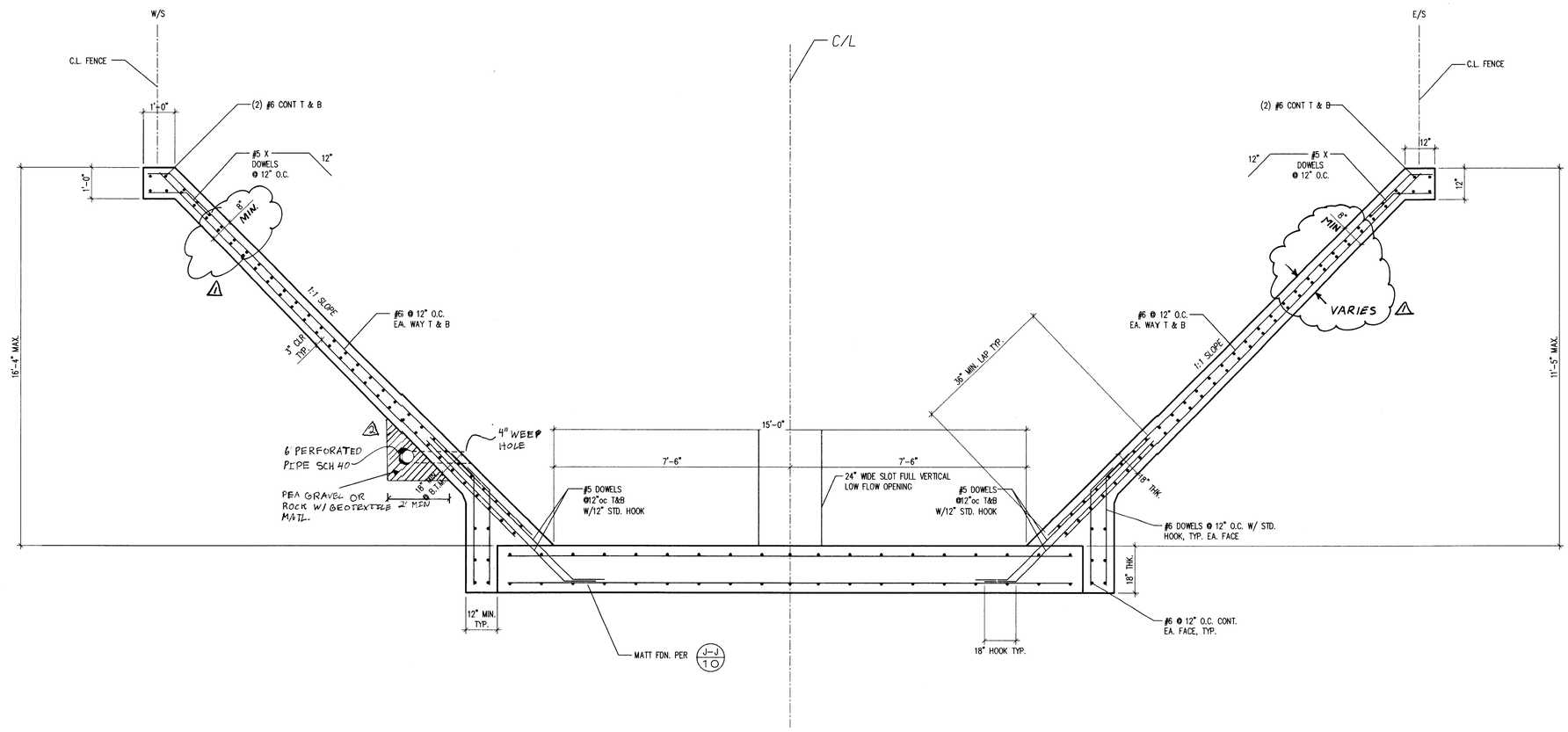

SECTION K-K

SCALE: 1/2"=1'-0"

ENERGY DISSIPATOR STRUCTURE

REGISTERED PROFESSIONAL ENGINEER EDWARD A. WAGGSTAFF C 25119 EXP 12-31-05 CIVIL STATE OF CALIFORNIA

"PF512993"

LI & ASSOCIATES, INC.
STRUCTURAL ENGINEERS
77 ROLLING OAKS DR. NO. 203
THOUSAND OAKS, CA. 91361
PHONE (805) 495-3432
FAX (805) 495-4083

REVIEWED LAND DEVELOPMENT DIVISION
BY SUBDIVISION PLAN CHECKING SECTION DATE 12/2/02

NO.	REVISION	REVISED BY	APPROVED BY	DATE
2	ADD 6" SUBDRAIN ALIGNMENT	EPW		6/23/03
1	CLARIFY DIMENSIONS	EPW		6/23/03

REGISTERED PROFESSIONAL ENGINEER JOE Z. LI No. 3155 Exp. 12/31/2003 STRUCTURAL STATE OF CALIFORNIA

PROJECT ENGINEER DATE

STORM DRAIN PLANS IN
D.S. NO. 508 P.D. No. 2530
COUNTY OF LOS ANGELES DEPARTMENT OF PUBLIC WORKS

PREPARED BY:
CROSBY MEAD BENTON & ASSOCIATES
Engineers • Planners • Surveyors
6345 Balboa Blvd. Suite 140
Encino, California 91316
(818) 343-5384

DWG