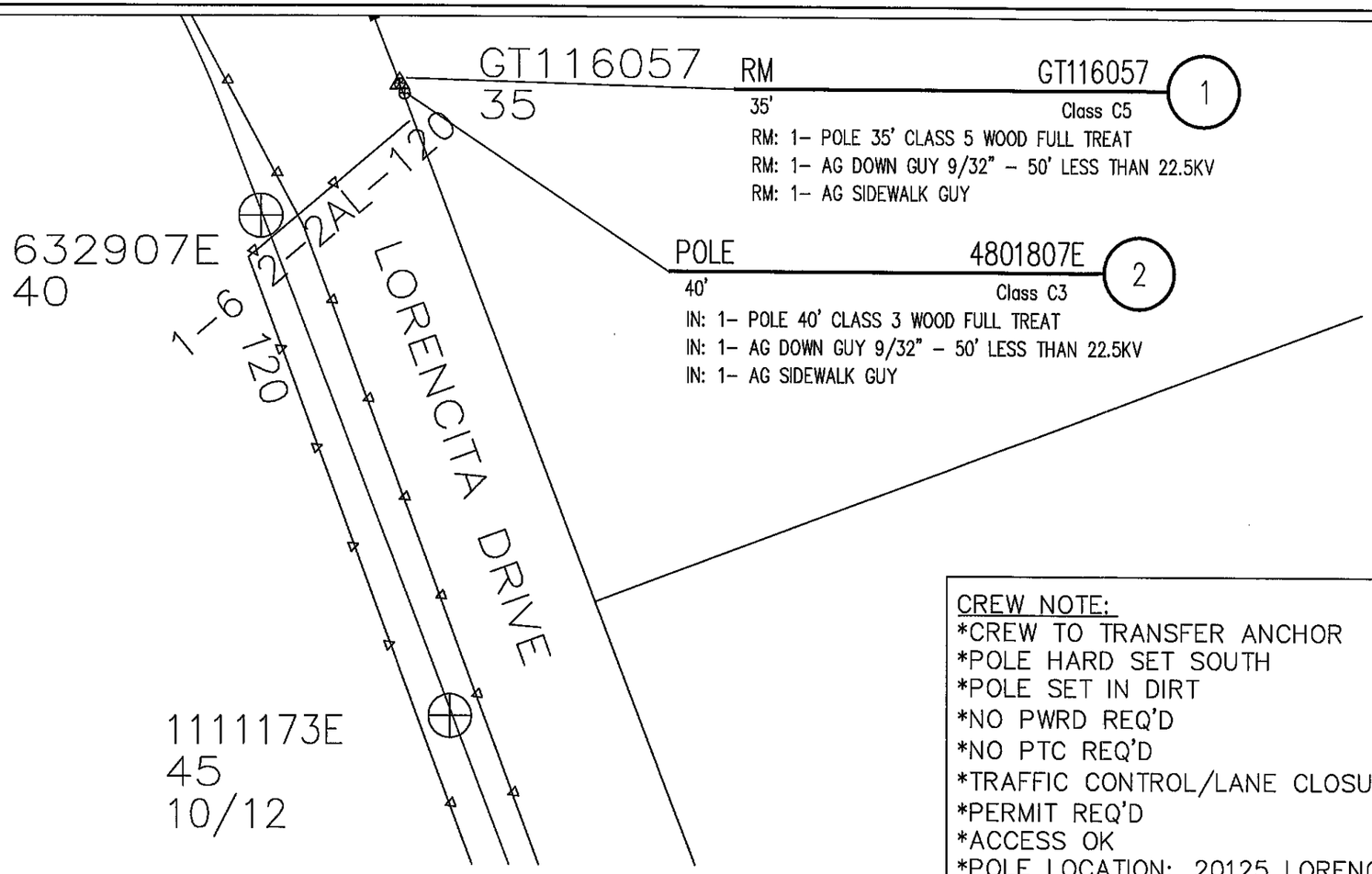

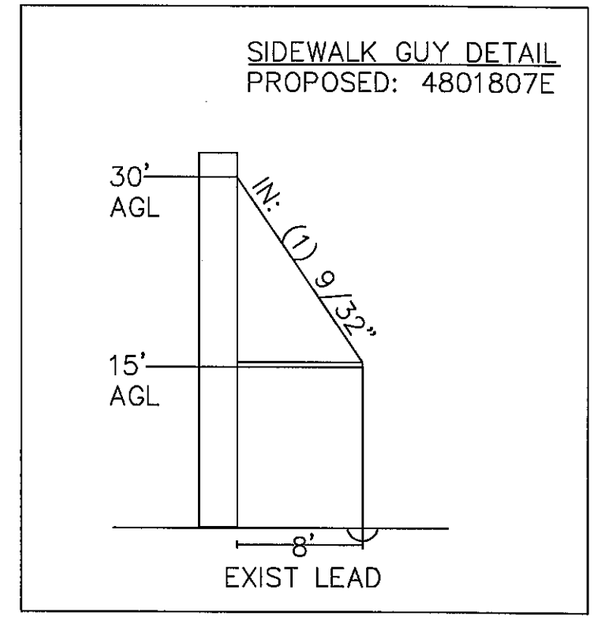

CREW NOTE:
*CREW TO TRANSFER ANCHOR
*POLE HARD SET SOUTH
*POLE SET IN DIRT
*NO PWRD REQ'D
*NO PTC REQ'D
*TRAFFIC CONTROL/LANE CLOSURE REQ'D
*PERMIT REQ'D
*ACCESS OK
*POLE LOCATION: 20125 LORENCITA

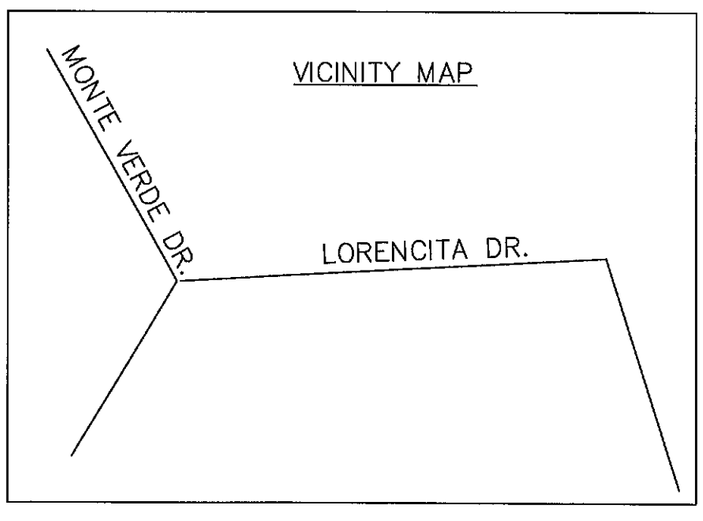

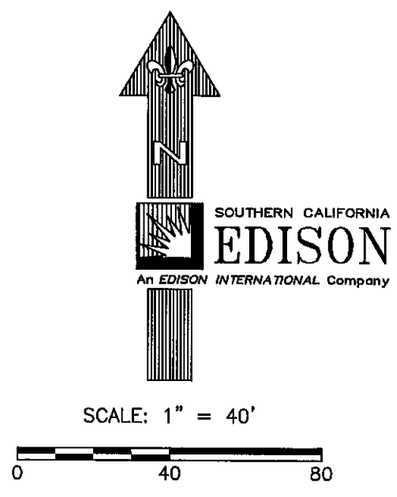

NOTIFICATION #405785353
NEED DATE: 1-08-2015.

MEDAL 12kv % TROPHY

DISTRICT 26 - COVINA	PROJ. MGR. LICON, MIROSLAVA PHONE 909-592-3761		PLANNER LICON, MIROSLAVA PHONE 909-592-3761		
FOREMAN	TRUCK NO.	P/E	INVENTORY MAP NO. 136-4329-1	THOMAS GUIDE 639-F1	GRID NO.
DESIGN NO. **603021_0.01**					
CSD 140 Y___ N___	BY-PASS CODE	EXISTING ___ CHANGE TO ___	TLM CHECKED ___ %LOAD	J.P.A. NO. E6026-000406	ASSOCIATED DESIGN NO. 227025
PRODUCT/SAP NO. **864958-INFRASTRUCTURE REPLACEMENT - DET POLE REPLACEMENT**			PRODUCT/SAP NO.		PRODUCT/SAP NO.

TYPE	APPROVED BY	DATE	CHECKED BY	DRAWN BY	PAX #
		7-2-2014		LORI YOUNG	

PROPOSED CONSTRUCTION (LOCATION)
20125 LORENCITA
WEST COVINA

SHEET 1 OF 1

JOB NO. 603021_0.01

Southern California Edison Company

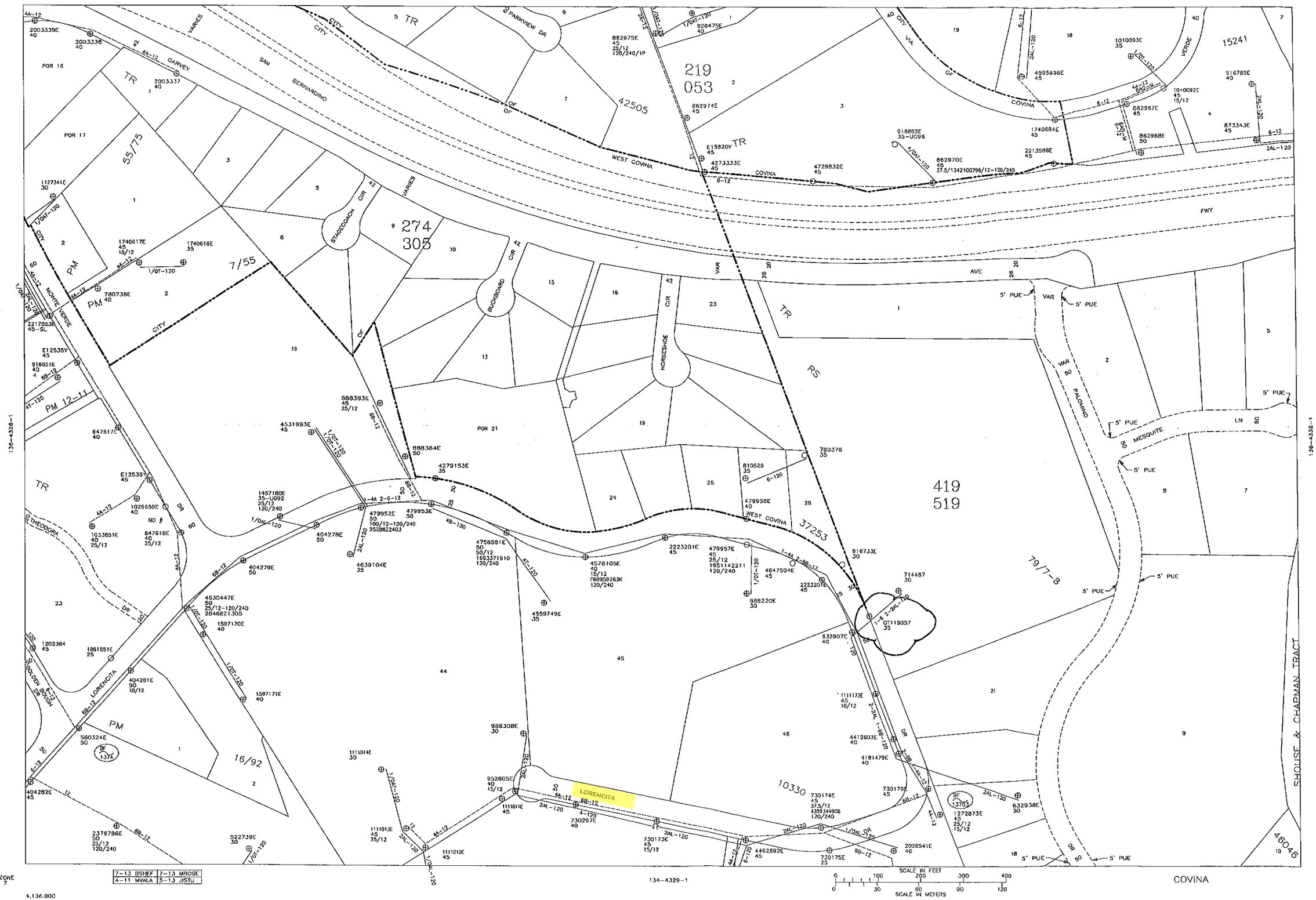
138-4329-1
136-4328-1
136-4332-1
134-4329-1
SAN BERNARDINO
GARVEY
PARKVIEW DR
WEST COVINA
COVINA
VIA
VERDE
FWY
AVE
STAGECOACH CIR
BUCKBOARD CIR
HORSESHOE CIR
MONTE VERDE
THEODORA
GOLDEN BOUGH DR
LORENCITA
PALOMINO
MESQUITE
LN
SHOUSE & CHAPMAN TRACT
219
053
274
305
419
519
42505
37253
10330
55/75
7/55
16/92
79/7-8
46046
15241
POR 16
POR 17
POR 21
TR
PM
RS
VAR
CITY
OF
5' PUE
SCALE IN FEET
SCALE IN METERS
7-13 BSHEF
7-13 MROSE
4-11 MVALA
5-13 JISTU
ZONE 7
4,329,000
4,136,000
11-83
THOMAS MAP
599
639

GT 116057