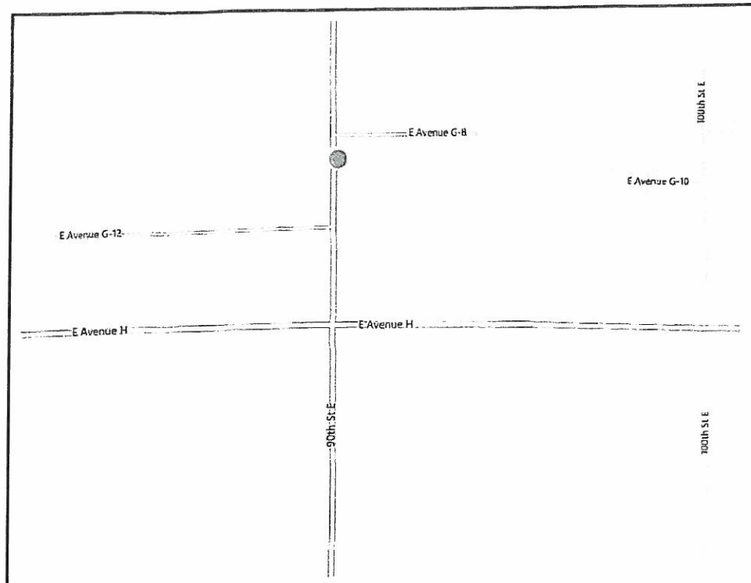

VICINITY MAP

NOT TO SCALE

SCHEDULED FOR 10-21

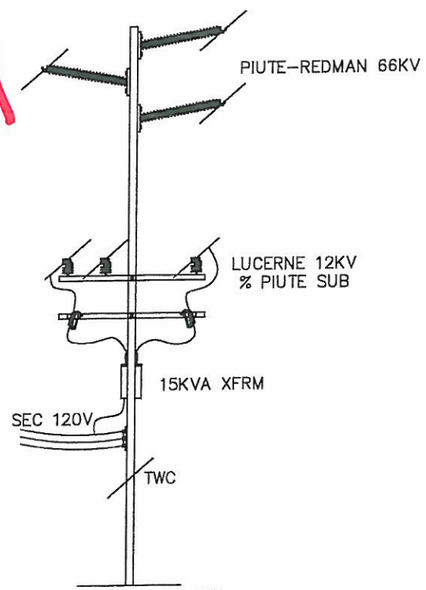

POLE HEAD DETAIL

NOT TO SCALE
L/N

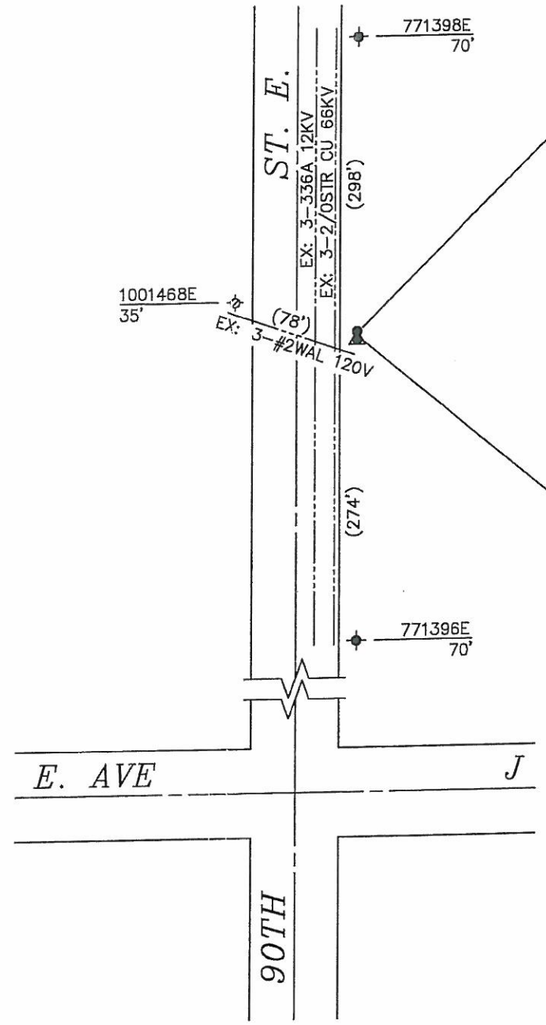

GPS: N34° 41' 33.8"
W117° 58' 10.6"

POLE 771397E (4)
70' Class H1
IN: 1– POLE ALL SIZE/CLASS WD/STEEL 1ST CONTACT
IN: 2– XA SNGL VB 12' STEEL PIN
IN: 3– INS POLY W/PIN 12KV CLMP #4–653 ACSR
IN: 1– MISC AVIAN HOOD FOR HENDRIX INSUL #4–653
IN: 1– SA POLY W/GND & T–GAP PRI–N 12KV 1P
IN: 2– FE CO MNT FOR ELF 100A 12KV 1–EA
IN: 2– FE FUSE ELF 15KV 6A
IN: 2– CUT OUT AVIAN COVER
IN: 1– TR OH 25KVA 12KV 120/240 1P
SN: _____
IN: 1– SEC 3–WIRE (284 RACK)
IN: 3– SEC DE #2 WAL SEC AUTO BAIL
IN: 1– GR OH #6 SOL WP SECONDARY W/ROD

RM 771397E (3)
70' Class FOREIGN
RM: 1– POLE ALL SIZE/CLASS WD/STEEL 1ST CONTACT
RM: 1– XA SNGL VB 10' STEEL PINS
RM: 5– INS GLASS & PIN 12KV TIE TOP 336 ACSR
RM: 1– XA SNGL FB 5' STEEL PINS
RM: 1– TR OH 15KVA 12KV 120/240 1P
SN: _____
RM: 2– SA PORC 12KV 1EA
RM: 1– SEC 3–WIRE (284 RACK)
RM: 1– GR OH #6 SOL WP SECONDARY W/ROD
RM: 1– GR OH #6 SOL WP PRIMARY W/ROD
RM: 1– MISC AVIAN HOOD FOR HENDRIX INSUL #4–653
TR: 3– 336A 12KV
TR: 3– #2WAL 120V (SEC)

N

SOUTHERN CALIFORNIA EDISON
An EDISON INTERNATIONAL Company

LUCERNE 12KV % PIUTE SUB
PIUTE–REDMAN 66KV

NOT TO SCALE

DISTRICT 36 – ANTELOPE VALLEY	PROJ. MGR. JOHN RODRIGUEZ PHONE 909–469–0219		PLANNER RENE GUZMAN PHONE 909–982–9450		BUDGET ITEM 480 / YEAR 2014
FOREMAN	TRUCK NO.	P/E	INVENTORY MAP NO. 141–87	THOMAS GUIDE 4017 J6 / GRID NO. 000	DESIGN NO. 540599_0.01
CSD 140 Y ___ N X	BY–PASS CODE	EXISTING 15KVA CHANGE TO 25KVA	TLM CHECKED 73.20 %LOAD	J.P.A. NO.	ASSOCIATED DESIGN NO. 505339_0.01
PRODUCT/SAP NO. 769777-INFRA REP - DET POLE REPLACE		PRODUCT/SAP NO. 719876-TRANSMISSION DET POLE REPLACE			PRODUCT/SAP NO.

TYPE	APPROVED BY	DATE	CHECKED BY	DRAWN BY	PAX #
		4/3/14		PAR/VHB	909–982–9450

Southern California Edison Company

PROPOSED CONSTRUCTION (LOCATION)
DETERIORATED POLE REPLACEMENT
E/S OF 90TH STREET EAST, 815' N/O AVE "J"
LANCASTER

SHEET ___ OF ___

JOB NO. 540599_0.01

NOTES:

HAND SET: NO
JOINT MEET: YES
TRUCK ACCESS: YES
CONTACT CATV: NO
PAVEMENT REPAIR: NO
JOINT ANCHOR: NO
ENVIRONMENTAL/ REAL PROP. REVIEW: NO

If changes to JPA are req'd i.e., Cut vs. PTD, or location change *contact Joint Utility prior to construction

UTILITY: _____
ENGINEER: _____
PHONE: _____
DATE: _____
INSPECTED BY: _____
DATE INSPECTED: _____ STA: 3 & 4