SPATS

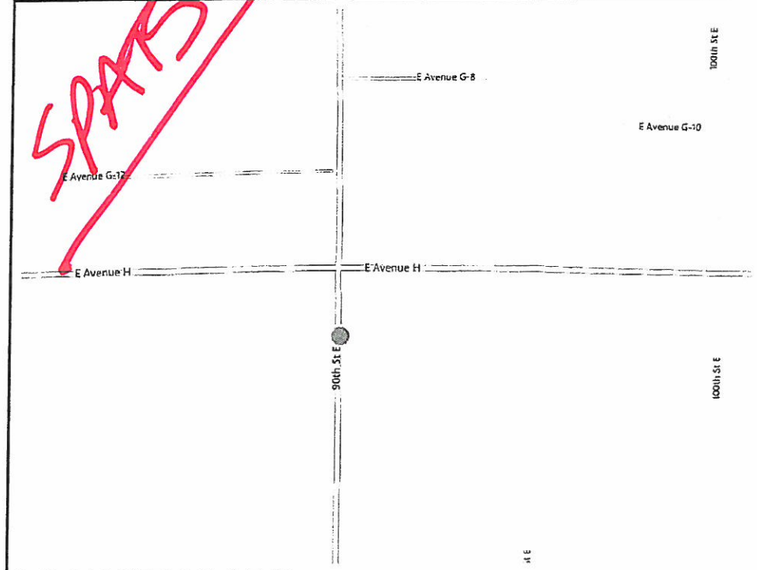

VICINITY MAP

NOT TO SCALE

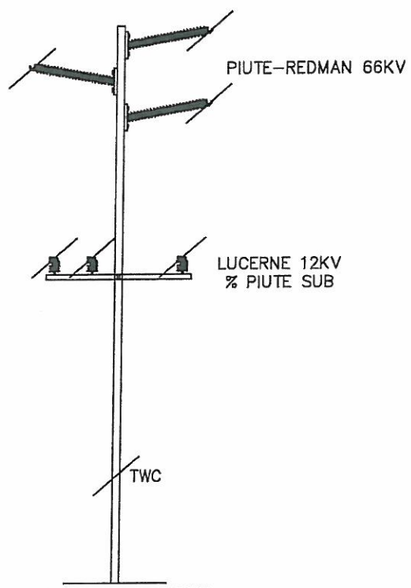

POLE HEAD DETAIL

NOT TO SCALE
L/N

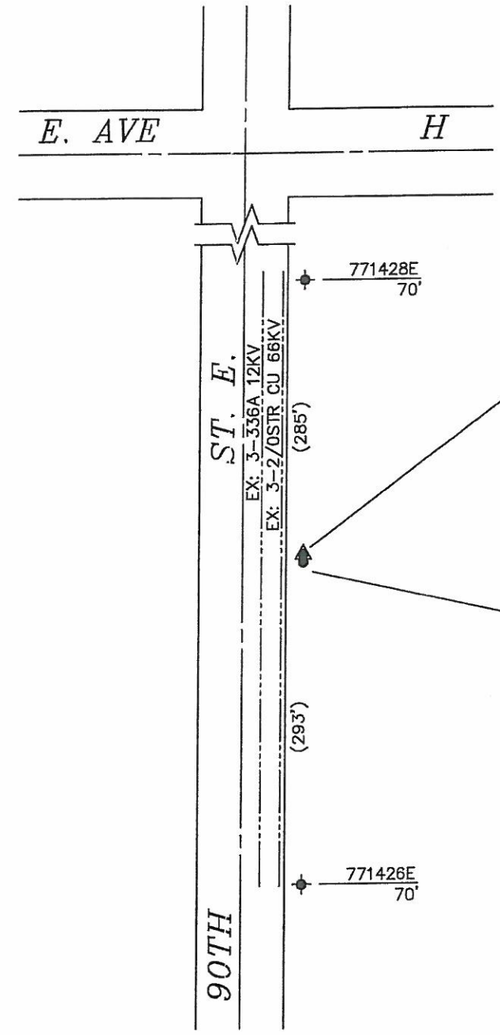

RM 771427E (5)
70' Class FOREIGN
RM: 1– POLE ALL SIZE/CLASS WD/STEEL 1ST CONTACT
RM: 1– XA SNGL VB 10' STEEL PINS
RM: 1– INS GLASS & PIN 12KV TIE TOP 336 ACSR
RM: 1– INS POLY W/PIN 12(25)KV CLMP #4–336 ACSR
RM: 1– INS GLASS & PIN 12KV CLMP #4–336 ACSR
TR: 3– 336A 12KV

GPS: N34° 43' 01.7"
W117° 58' 10.7"
POLE 771427E (6)
70' Class H1
IN: 1– POLE ALL SIZE/CLASS WD/STEEL 1ST CONTACT
IN: 1– XA SNGL VB 12' STEEL PIN
IN: 3– INS POLY W/PIN 12KV CLMP #4–653 ACSR
IN: 1– MISC AVIAN HOOD FOR HENDRIX INSUL #4–653

N

SOUTHERN CALIFORNIA EDISON
An EDISON INTERNATIONAL Company

LUCERNE 12KV % PIUTE SUB
PIUTE–REDMAN 66KV

NOT TO SCALE

DISTRICT 36 – ANTELOPE VALLEY	PROJ. MGR. JOHN RODRIGUEZ PHONE 909–469–0219		PLANNER RENE GUZMAN PHONE 909–982–9450	BUDGET ITEM 480	YEAR 2014
FOREMAN	TRUCK NO.	P/E	INVENTORY MAP NO. 144–87	THOMAS GUIDE 4017 J2	GRID NO. 000
DESIGN NO. 540599_0.01					
CSD 140 Y___ N___	BY–PASS CODE	EXISTING ___ CHANGE TO ___	TLM CHECKED ___ %LOAD	J.P.A. NO.	ASSOCIATED DESIGN NO. 505339_0.01
PRODUCT/SAP NO. 769777-INFRA REP - DET POLE REPLACE		PRODUCT/SAP NO. 719876-TRANSMISSION DET POLE REPLACE		PRODUCT/SAP NO.	

TYPE	APPROVED BY	DATE	CHECKED BY	DRAWN BY	PAX #
		4/3/14		PAR/VHB	909–982–9450

Southern California Edison Company

PROPOSED CONSTRUCTION (LOCATION)
DETERIORATED POLE REPLACEMENT
E/S OF 90TH STREET EAST, 4416' N/O AVE "I"
LANCASTER

SHEET ___ OF ___

JOB NO. 540599_0.01

NOTES:

HAND SET: NO
JOINT MEET: YES
TRUCK ACCESS: YES
CONTACT CATV: NO
PAVEMENT REPAIR: NO
JOINT ANCHOR: NO
ENVIRONMENTAL/ REAL PROP. REVIEW: NO

If changes to JPA are req'd i.e., Cut vs. PTD, or location change *contact Joint Utility prior to construction

UTILITY: ___
ENGINEER: ___
PHONE: ___
DATE: ___
INSPECTED BY: ___
DATE INSPECTED: ___ STA: 5 & 6