CONTACT: COLEMAN
CONTACT: 323-295-5484

CITY OF LOS ANGELES
STOCKER 16KV
WINDSOR HILLS SUB

PROJECT REQUIREMENTS	
EDISON EASEMENT REQUIRED	N
PWRD BB REQUIRED	N
PERMIT REQUIRED	N
PERMIT TYPE:	
OUTAGE REQUIRED	N
TRAFFIC CONTROL REQUIRED	Y
PED. TRAFFIC CONTROL REQ'D	N
CONVEYANCE LETTER REQ'D	N

CREW & CUSTOMER MAP
TD809708
SCE VTC REQUIRED
PTC NOT REQUIRED
VAULT HOT TIE IN MEASUREMENTS

WARNING
THE EXCAVATOR MUST TAKE ALL STEPS NECESSARY TO AVOID CONTACT WITH UNDERGROUND FACILITIES WHICH MAY RESULT IN INJURY TO PERSONS OR DAMAGE TO FACILITIES IN THE AREA. THE INDICATED LOCATIONS OF EDISON UNDERGROUND FACILITIES, AS PROVIDED, ARE BELIEVED TO BE ACCURATE, HOWEVER, THE FINAL DETERMINATION OF EXACT LOCATIONS AND THE COST OF REPAIR TO DAMAGED FACILITIES IS THE RESPONSIBILITY OF THE EXCAVATOR.

UNDERGROUND SERVICE ALERT
Dial 811
Call USA
For Underground Locating
2 Working Days Before You Dig

CONSTRUCTION NOTES:

Unless otherwise specified on the working drawing which forms a part of the specification, the Contractor/Developer shall furnish the following items at no cost to the Edison Company.

Southern California Edison Company has attempted to correctly show all existing utilities and substructures in the vicinity of the work, but does not guarantee there are no other substructures in the area.
Failure of SCE to show all substructures in their correct location will not be a basis for a claim for extra work, and the contractor shall be responsible for all damages to substructures whether shown or not.

1. FOR GENERAL SPECIFICATIONS SEE UGS GI 001.

2. CONDUIT:
   a. Minimum cover in street or parkway is 30" below gutter grade, unless noted otherwise.
   b. Minimum cover on private property is 30" below finished grade, unless noted otherwise.
   c. Contractor is to furnish and install approved conduit to Edison specifications per UGS CD 100.1, 110 AND 120.
   d. For the type of conduit for this job, See UGS CD 110.1.
   e. Install all risers per UGS CD 160, 161, 162 and 170.
   f. Cap all mainline conduits per UGS CD 145 and service conduits per UGS CD 150.
   g. Install blank conduit plugs in all conduits terminating into Vaults, Manhole's, PMH's, SOE's & all cap locations, per UGS CD 180.1 & UGS CD 180.2
   h. Install pull rope in all conduit runs. Pull rope to be 1/4" polypropylene or polyethylene rope, braided or twisted. For specifications, approved makes, and suppliers, see UGS GI 040.
   i. All conduit must be mandreled with the approved mandrel UGS CD 197.

3. CONDUIT RADIUS REQUIREMENTS:
   a: The minimum radius for bends are:
      36" for conduits 3" in diameter or smaller
      48" for conduits 4" and 5" in diameter
      60" for 6" diameter conduit
   b: The minimum radius for all sweeps of all mainline conduits is 12'-6" (unless noted otherwise).

4. EXCAVATION AND BACKFILL:
   a. Work area shall be cleared and rough graded to within four inches of final grade prior to installation of Edison conduit or structures.
   b. All excavations shall be in accordance with the California State Construction Safety Orders (when applicable), Edison specifications, and all governing local ordinances.
   c. Each trench to be a uniform depth below final grade prior to installation of Edison conduit or structures.
   d. Backfill shall be provided by the Contractor for all excavations and shall include crushed rock, concrete, and/or imported backfill, when required.
   e. Backfill with a MINIMUM of one sack per yard sand cement slurry around and over vaults and manholes per UGS GI 030, section 6.4 and around PMH's within one foot of finished grade, per UGS SS 590.1.
   f. Backfill, per Edison specifications, shall immediately follow conduit or substructure installation. At no time shall conduit be left exposed over 24 hours.
   g. No rocks are allowed within 12 inches of direct-buried cables or any conduit without concrete encasement. Native backfill capable of passing through a one-half inch mesh screen shall be considered to be "rock free". If existing backfill does not pass through a 1/2" screen, place imported sand 3" below and 12" above Edison cables. After this point, no rocks larger than 12" diameter are permitted.
   h. All backfill shall be compacted to meet or exceed local ordinances or other requirements. It shall be placed in a manner that will not damage the conduit or substructure or allow future subsidence of the trench or structures.

5. PAVING:
   Repaving, where required, shall be placed in such a manner that interference with traffic, including pedestrian traffic, will be kept to a minimum. The Contractor shall establish a program of repaving acceptable to the Municipality, County, or other authority having jurisdiction and which is acceptable to Edison.

6. STRUCTURES:
   a. All substructures shall be constructed or installed to Edison specifications.
   b. Install protection barriers per UGS MS 830 when required in areas exposed to traffic, per Edison Inspector.
   c. All conduit lines and concrete floored substructures shall be water tight.
   d. All grounding materials shall be furnished and installed by the Contractor.

7. RETAINING WALLS:
   When required, retaining walls shall be provided by the Developer. Walls are required wherever grade rises more than 18 inches above the structure or 24" above the pad surface at a distance of 5 feet from the same, or in areas subject to erosion. Design and installation must comply with local building ordinances. Refer to Edison Inspector for typical space requirements.

8. PERMITS:
   All permits necessary for excavation shall be provided by the Contractor/Developer.

9. ACCESS:
   Heavy truck access shall be maintained to equipment locations. Structures must be clear of all appurtenances that would obstruct the loading or unloading of equipment.

10. SERVICES:
    a. Meters and services shall comply with Edison Electrical Services Requirements.
    b. Wiring must be in accordance with applicable local ordinances and approved by local Inspection Authorities.

11. LOCATION:
    a. The location of excavations and structures for Edison shall be as shown on the working drawing. No deviation from the planned locations will be permitted unless approved by the Edison Inspector. See UGS GI 001, section 2.2.
    b. Actual location of obstructions, storm drains, and/or other foreign utilities to be the responsibility of the Contractor. See UGS GI 001, section 2.3.

12. Contractor is to verify location and widths of all sidewalks and driveways prior to street light installation. See UGS CD 175.1, UGS CD 175.2 and UGS CD 175.3.

13. SURVEY:
    Surveying of street improvements, property corners, lot lines, finished grade, etc., necessary for the installation of underground facilities must be completed and markers or stakes placed prior to the start of the installation. In addition, Developer shall maintain the markers during the installation and inspection by Edison. Grade and property line stakes must show any offset measurements.

14. COORDINATION AND SUPERVISION:
    The Developer shall provide supervision over and coordination among the various contractors working within the development in order to prevent damage to Edison facilities. He is responsible for the cost of repairs, replacement, relocation, or other corrections to Edison facilities made necessary by his failure to provide supervision or to otherwise comply with these specifications.

15. TELEPHONE AND OTHER UTILITY REQUIREMENTS:
    The drawing prepared for this job may also cover the facilities to be installed for the telephone company and/or other utility. Any questions concerning details of their installation should be referred to the company concerned.

16. OWNERSHIP:
    Developer is to deed to the Edison Company all structures shown hereon except those shown as customer owned.

17. WARRANTY:
    Applicants expressly represent and warrant that all work performed and all material used in meeting Applicants' obligations herein are free from defects in workmanship and are in conformity with Southern California Edison Company's requirements. This warranty shall commence upon receipt by Applicants of Company's final acceptance and shall expire one year from that date. Applicants agree to promptly correct to the Company's satisfaction and that of any governmental agency having jurisdiction and at Applicant's expense any breach of this warranty which may become apparent through inspection or operation of underground electric system by Company during this warranty period.

18. INSPECTION:
    Inspection is required during the construction period. A 48 hour advance notice of intent to start construction is required from the contractor to the Southern California Edison Company. Standards of Edison construction requirements are available upon request.

Duct and Structure Inspector: JESSE CARRASCO Phone: 310779-3195
Cabling Construction Coordinator: Phone:

D05: Rev. 07/17/07

LEGEND OF CONDUIT SYMBOLS
(CONVENTIONAL U. G.)

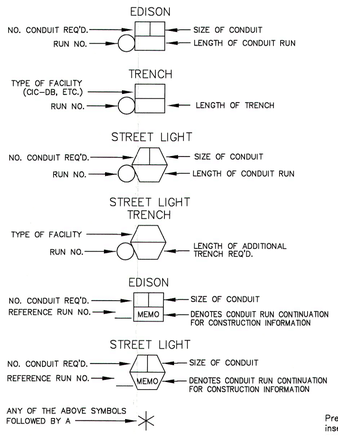

DENOTES THE FOLLOWING:

DB CONDUIT WITHOUT ENCASEMENT IS ACCEPTABLE FOR PORTIONS OF TRENCH WITH ONLY ONE OR TWO CONDUITS

SEMI-ENCASEMENT IS REQUIRED FOR PORTIONS OF TRENCH WITH ONLY THREE OR FOUR CONDUITS

FULL ENCASEMENT IS REQUIRED FOR MORE THAN FOUR CONDUITS

D18: Rev. 5/08/2006

LEGEND CODE DEFINITIONS

CI – CUSTOMER CONTRACTOR INSTALLED: MATERIALS FURNISHED AND INSTALLED BY APPLICANT AT EDISON'S EXPENSE AND ARE DEEDED TO EDISON. (EXCEPTION: STREET LIGHT ELECTROLIERS WILL BE INSTALLED BY EDISON'S CONTRACTOR.)

CO – CUSTOMER CONTRACTOR OWNED: MATERIALS FURNISHED, INSTALLED, OWNED, AND MAINTAINED BY APPLICANT.

CF – CUSTOMER CONTRACTOR FURNISHED: MATERIALS FURNISHED AND INSTALLED BY APPLICANT AT APPLICANT'S EXPENSE THAT MAY BE DEEDED TO EDISON.

IN – INSTALL: MATERIALS FURNISHED AND INSTALLED BY APPLICANT IF APPLICANT INSTALLED PROJECT OR BY EDISON IF EDISON INSTALLED PROJECT. (EXCEPTION: FOR AN APPLICANT INSTALLED LINE EXTENSION. STATION NOS._____
HAVING AN ASTERISK ADJACENT TO AN "N" LEGEND CODE REPRESENTS MATERIALS TO BE PROVIDED BY APPLICANT AND INSTALLED BY EDISON IN ALL CASES. REFER TO DPB 825B. PROJECT MATERIAL LIST BY ASSEMBLY WITHIN A STATION.)

MI – MEMO INSTALL: SAME AS IN-INSTALL.

MR – MEMO REMOVE: MATERIALS REMOVED BY EDISON.

RM – MEMO REMOVED: MATERIALS REMOVED BY EDISON.

SI – SHOOFLY IN: MATERIALS FURNISHED AND INSTALLED BY EDISON FOR TEMPORARY CONSTRUCTION.

SR – SHOOFLY REMOVE: MATERIALS REMOVED BY EDISON FOR TEMPORARY CONSTRUCTION.

TR – TRANSFER: EDISON LABOR REQUIRED TO TRANSFER EXISTING FACILITIES.

D31: Rev. 11/85

CONCRETE PRODUCTS

Precast concrete item complete with neck. Cover and inserts may be obtained from any of the following listed and approved manufactureres:

JENSEN PRECAST
14221 San Bernardino Ave., Fontana, Calif. 92335
Phone: (909) 350-4111
(800) 257-6100

OLDCASTLE PRECAST
10650 Hemlock Ave., Fontana, Calif. 92337
Phone: (909) 428-3700
(800) 626-3860

FOR HANDHOLE AND PULLBOX MANUFACTURERS, SEE UGS HP 200.

D41: Rev. 01/21/09

TYPICAL CONDUIT SECTION JOINT WITH CATV & TELE SEE UGS CD 120

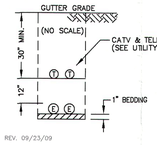

DB1-J REV. 09/23/09

PANEL CLEARANCE UNDERGROUND SERVICE CONNECTIONS 0-600 VOLTS SEE ESR 3-16

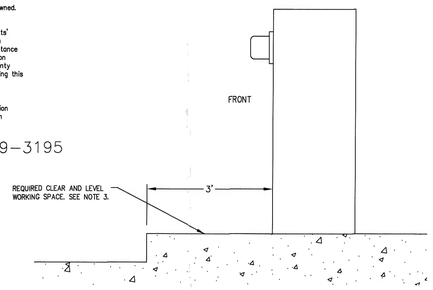

NOTES:
1. A MINIMUM OF THREE (3) FEET OF CLEAR, LEVEL WORK SPACE IS REQUIRED IN FRONT OF ALL TERMINATION, METERING, AND SERVICE EQUIPMENT.
2. SEE ESR-5 FOR METER-MOUNTING HEIGHT REQUIREMENTS. METER MOUNTING HEIGHT WILL BE MEASURED FROM THE STANDING AND WORKING SPACE TO THE CENTERLINE OF THE METER(S).
3. WHEN SERVICE EQUIPMENT IS INSTALLED ON AN ELEVATED PORTION OF THE FLOOR/GROUND, OR HOUSKEEPING PAD, THE PAD SHALL BE FLUSH WITH AND EXTEND A MINIMUM OF THREE (3) FEET. THIS IS MEASURED FROM THE FRONT OF THE SERVICE EQUIPMENT OR THE OUTER DOOR(S) OF THE SWITCHBOARD NEMA 3R ENCLOSURE WHEN INSTALLED. IN NO CASE SHALL THE MAXIMUM METER HEIGHT OF SIX (6) FEET THREE (3) INCHES BE EXCEEDED.
4. TO MAINTAIN A SAFE, CLEAR, AND LEVEL WORKING AREA IN FRONT OF NEW OR EXISTING METER AND SERVICE EQUIPMENT, A CONCRETE SLAB OR OTHER SUITABLE PERMANENT HARD SURFACE, ACCEPTABLE TO THE COMPANY, MUST BE USED.
5. FOR SWITCHBOARDS ABOVE 600V, FIVE-FOOT MINIMUM OF CLEAR AND LEVEL STANDING AND WORKING SPACE IS REQUIRED IN THE FRONT, REAR, AND SIDE OF ANY SECTION WHERE SUCH PART SUPPORTS OR PROVIDES ACCESS TO METERING, TESTING EQUIPMENT, OR SERVICE CABLE TERMINATION SECTIONS.

D99: 07/08/07

TYPICAL HANDHOLE INSTALLATION SEE UGS HP 205

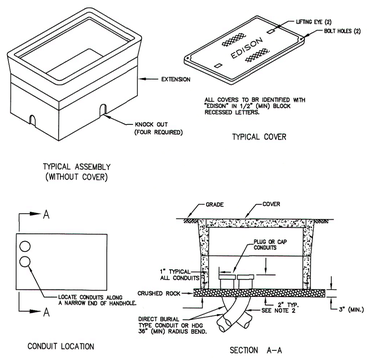

NOTES:
1. SEE UGS HP 200 FOR DIMENSIONS OF VARIOUS SIZE HANDHOLES AVAILABLE.
2. RADIUS ANGLE MAY BE REDUCED TO LESS THAN 90° PROVIDING THE PROJECTED CENTER LINE OF THE CONDUIT CLEARS HANDHOLE OPENING.
3. TWO HOLD DOWN DEVICES TO BE SUPPLIED WITH EACH HANDHOLE.

D75 REV. 02/14/11

CONNECTING TO EXISTING SCE STRUCTURES

- Per SCE requirements, customers are not allowed to enter, intercept or tie-in to existing SCE structures, equipment or conductors. This work will only be performed by SCE. Contact the appropriate SCE inspector to schedule an appointment. Customers may connect to an existing duct stub without a SCE inspector present.
- Per CPUC/SCE's Rule 15 B.1.A and Rule 16 D.1.A., the customer will provide all necessary excavations (with the exception of excavation under pads and primary splice boxes), material (including conduit and structures) and encasement, to be utilized in the intercept/tie-in process.
- The customer must adhere to all applicable Cal-OSHA, local, city, state and federal regulations, (including, but not limited to, all necessary sharing and traffic control in place to perform the intercept/tie-in work by SCE's underground civil contractors(s))
- Intercept/tie-in work must be coordinated with SCE's civil contractors through the Division Inspector/CCM to limit exposure of excavation(s). Customer is responsible for securing excavation(s).

DOB: 12/10/07

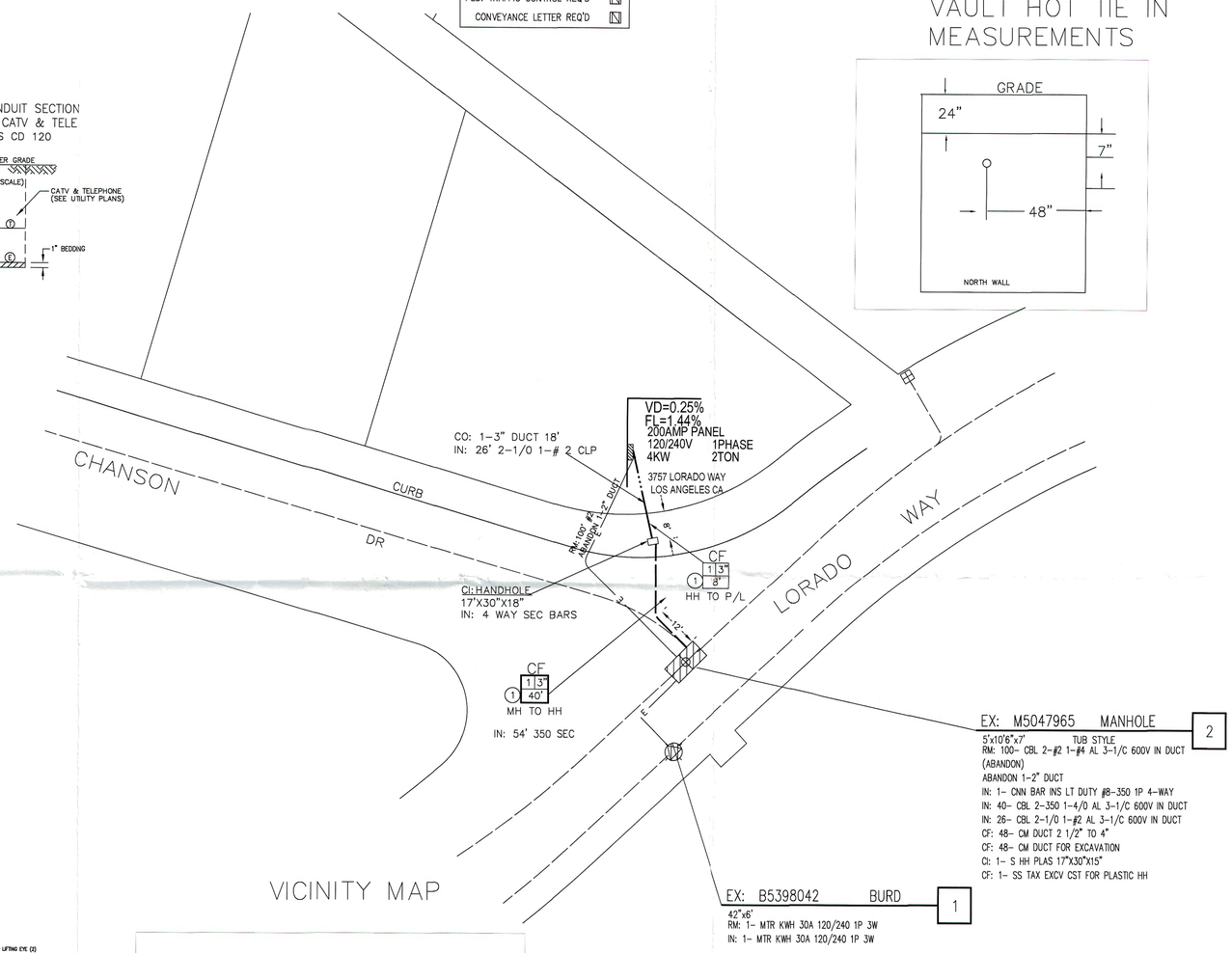

VICINITY MAP

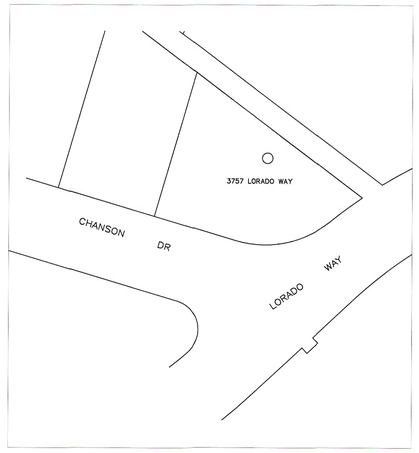

TLM DATA:	SIZE	KVA	#CUST	%LOAD
EXIST	50.0	72.4	21	144.8
PROP	50	72.4	21	144.8
	VD = .25		FLICKER = 1.44	

N

SOUTHERN CALIFORNIA EDISON
An EDISON INTERNATIONAL Company

SCALE: 1" = 20'
0 20 40

DISTRICT 44 – SOUTH BAY		PROJ. MGR. PHONE		PLANNER CYNTHIA CARRILLO PHONE 310-783-9483	
FOREMAN		TRUCK NO. P/E	INVENTORY MAP NO. 57-66C-3	THOMAS GUIDE / GRID NO.	DESIGN NO. 565748_0.01
CSD 140 Y___ N___	BY-PASS CODE	EXISTING ___ CHANGE TO ___	TLM CHECKED ___ %LOAD	J.P.A. NO.	ASSOCIATED DESIGN NO.
PRODUCT/SAP NO. 809708-LINE EXTENSION		PRODUCT/SAP NO.		PRODUCT/SAP NO.	

PROPOSED CONSTRUCTION (LOCATION)
3757 LORADO WAY
LOS ANGELES

TYPE	APPROVED BY	DATE	CHECKED BY	DRAWN BY	PAX #
		3/28/14	CYNTHIA CARRILLO	C ELIJS	33308

Southern California Edison Company

SHEET 1 OF 1 — JOB NO. 565748_0.01