(P) 3.21.14 (T)

PERMIT NOT NEEDED

LOC. S/END OF ALLEY W/SIDE
162' W/OF SAN GABRIEL BLVD.
205' S/OF CELITO DR.
REAR OF ADD. 8170/8174 CELITO DR

LA CO / ROSEMEAD

CITY OF ROSEMEAD

3 RM 327707E
40' Class C4
RM: 1– POLE 40' CLASS 4 WOOD FULL TREAT
RM: 1– XA SNGL VB 10' STEEL PINS
RM: 1– TR OH 25KVA 16KV 120/240 1P
SN:
RM: 3/8" DG

4 POLE 327707E
45' Class C2
IN: 1– POLE 45' CLASS 2 WOOD FULL TREAT
IN: 1– FE CO OPEN W/10' XA 100A 16KV 3P
IN: 1– TR OH 37KVA 16KV 120/240 1P
SN:
IN: 3– INS POLY DE 16KV CNTM RIG #4
IN: 4– SEC ROLLER (166–CLEVIS & SPOOL)
IN: 1– AG DOWN GUY 3/8" – 50' LESS THAN 22.5KV
IN: 1– AG ANCHOR ROD 1 " X 10' 3–EYE W/PLATE
IN: 1– AG SIDEWALK GUY
TR: 3W– #4 BC 12KV
TR: 3W– #4 BC 120V SEC
TR: 1/0 AT 120 SEC

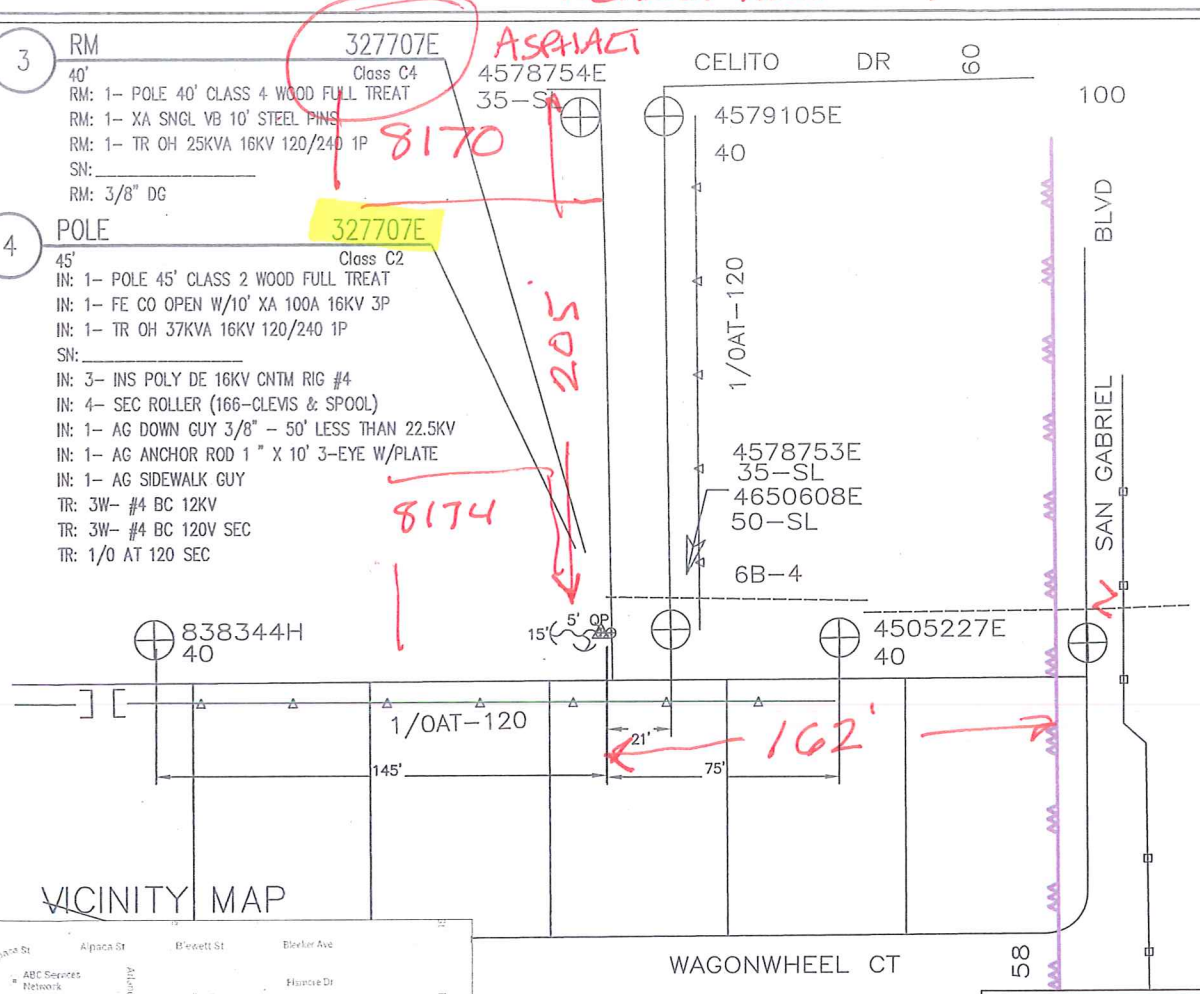

34° 2'48.79"N
118° 5'29.64"W

– NO PTC
– TRAFFIC CTRL REQ'D
ALLEY ACCESS
– NO TRUCK ACCESS

PROJECT REQUIREMENTS	
EDISON EASEMENT REQUIRED	☐
PWRD 88 REQUIRED	☐
PERMIT REQUIRED	☐
PERMIT TYPE:	
OUTAGE REQUIRED	☐
TRAFFIC CONTROL REQUIRED	☐
PED. TRAFFIC CONTROL REQ'D	☐
CONVEYANCE LETTER REQ'D	☐

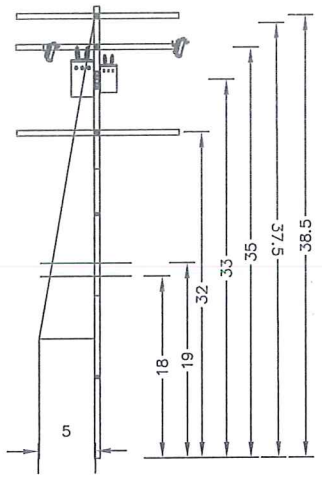

SOUTHERN CALIFORNIA EDISON
An EDISON INTERNATIONAL Company

NOT TO SCALE

VICINITY MAP

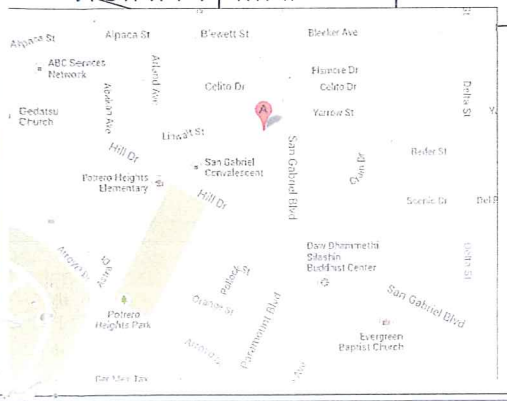

HIGHCLIFF 16KV % RUSH

DISTRICT 22 – MONTEBELLO	PROJ. MGR. RODRIGUEZ, JOHN THEODORE PHONE		PLANNER SMITH, COLE PHONE 951–581–2677		
FOREMAN	TRUCK NO.	P/E	INVENTORY MAP NO. 128–4260–1	THOMAS GUIDE LAC 636 F4	GRID NO.
DESIGN NO. 557558_0.01					
CSD 140 Y___ N___	BY–PASS CODE	EXISTING ___ CHANGE TO ___	TLM CHECKED ___ %LOAD	J.P.A. NO.	ASSOCIATED DESIGN NO.
PRODUCT/SAP NO. 797796-INFRA REP - DET POLE RELACE	PRODUCT/SAP NO.			PRODUCT/SAP NO.	

TYPE	APPROVED BY	DATE	CHECKED BY	DRAWN BY	PAX #

PROPOSED CONSTRUCTION (LOCATION)
DET POLE RELACE
XSTRT VARIOUS
MONTEBELLO CA 00000

SHEET 1 OF 1

JOB NO. 557558_0.01

Southern California Edison Company

PAGE NO. 2 J.P. AUTH. NO. E6022-405829431

POLE NO.	Pole Length / Anchor Size	Year Set	Pole Trt / Class / Anchor Direct.	Record 4KV E	Record 16KV E	Record HLA	Record	Record	Proposed 4KV E	Proposed 16KV E	Proposed HLA	Proposed	Proposed	Proposed	Item No.	LOCATION AND NATURE OF WORK If not in accordance with Joint Pole agreement and routine-state reasons.	
																E TO REPLACE PER SEC. 7.11	1
327707E	40	27	FT		33-10	23-5				C-10	PTD					CELITO DR PLS 160` W/O SAN GABRIEL BL	2
										1/2(1)					5C		3
																	4
327707E	45	14	FT							33-10	23-5					CELITO DR PLS 160` W/O SAN GABRIEL BL	5
			CL-2													NOTE: SET NEW POLE 1` WEST OF EXISTING	6
																	7
																E TO REPLACE PER SEC. 7.11, 12.12	8
508719E	40	36	FT	34		23`			C-10		PTD					SCENIC VIEW ST N/S 31` W/O DELTA ST	9
									1/2(1)						5C		10
	1"		E	.50		.50			AT						111B		11
																	12
508719E	40	14	FT						34`		23`					SCENIC VIEW ST N/S 31` W/O DELTA ST	13
			CL-2													NOTE: SET NEW POLE 1` NORTH OF EXISTING	14
																	15
																	16
																	17
																	18
																	19

POLE LEGEND:
P = PULL
PB = PULL BUTT
T = TRANSPORT
S = SALVAGE
D = DISPOSE
TN = TENANT

L = LOWER CUT
C(XX)= FOOTAGE CUT
SCZ = SAFETY CLEARANCE ZONE

ANCHOR LEGEND:
AR = ANCHOR/ARM REMOVED
AT = ANCHOR/ARM TRANSFERRED

Show Quantity of Items to be billed in the Column of Party to be Paid.

GEOGRAPHICAL LOCATION

COMMUNITY

Rev. Jan 2010

1/29/2014 10:43 AM