ALTADENA | LACO

PERMIT NEEDED

HFIA

pole locate c/s at address 26 Pine ST.

BULLETIN 322 ZONE

STATIONS 9 & 10

N

SOUTHERN CALIFORNIA EDISON
An EDISON INTERNATIONAL Company

NOT TO SCALE

(P) JS 5.24

c/s grass

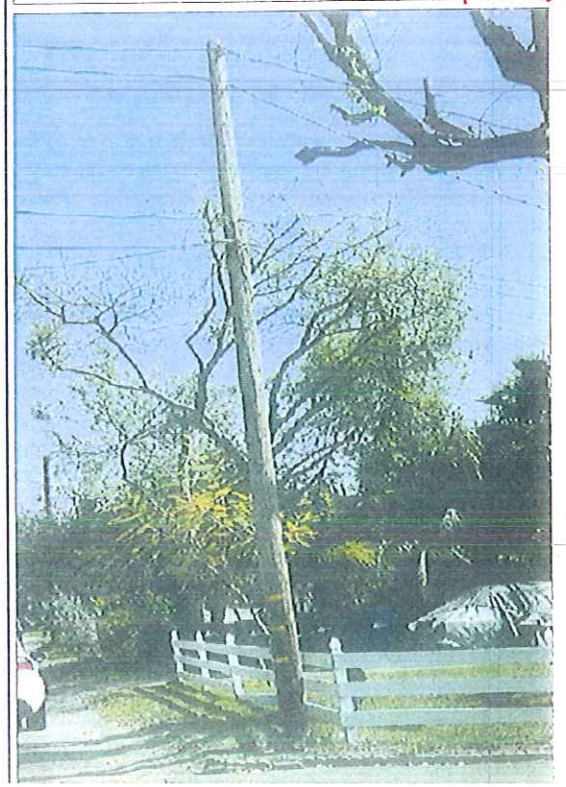

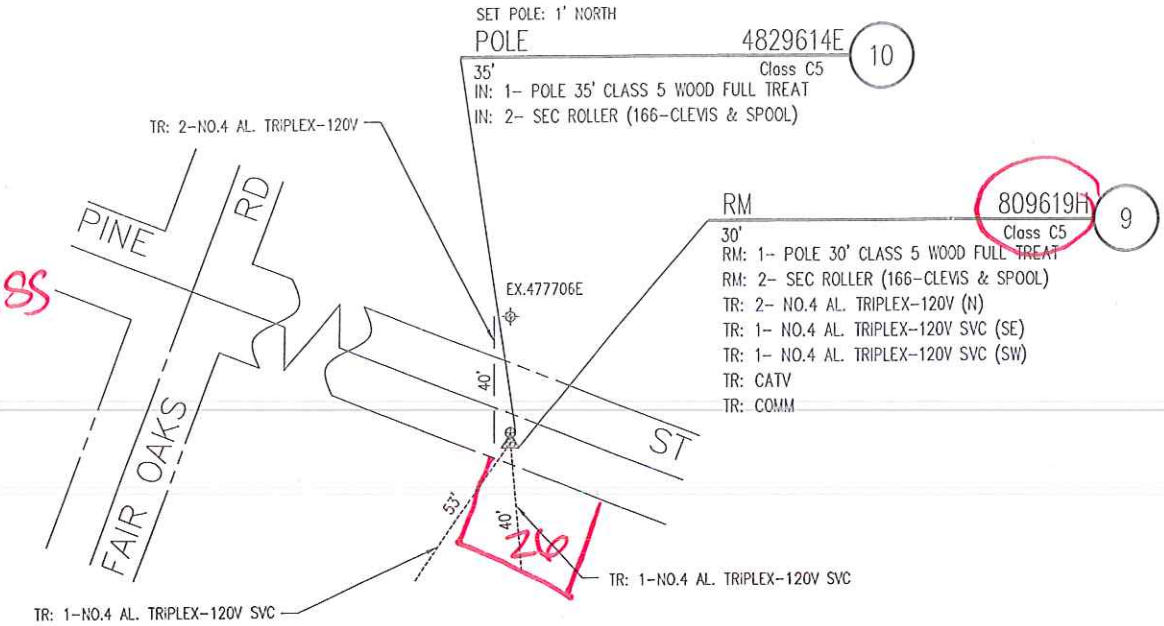

LOCATION:
N 34 ° 11 ' 43.36 "
W 118 ° 08 ' 46.90 "

CIRCUIT: PEIDMONT 4KV SUB: FAIR OAKS

NOTES

HAND SET:	NO
JOINT MEET:	NO
TRUCK ACCESS:	YES
CONTACT CATV:	NO
TRAFFIC CNTRL REQ'D:	NO
OUTAGE REQ'D:	YES
TREE TRIMMING:	NO
BACK YARD:	NO
PED TRAFFIC CNTRL:	NO
PERMIT REQUIRED:	NO
PAVEMENT REPAIR:	NO

DISTRICT 27 – MONROVIA	PROJ. MGR. RODRIGUEZ, JOHN T PHONE 909-469-0219		PLANNER CUSMANO, MARK PHONE 951-808-9501 (K&B)		
FOREMAN	TRUCK NO.	P/E	INVENTORY MAP NO. 81-77C	THOMAS GUIDE 535-H5	GRID NO.
DESIGN NO. 561318_0.01					
CSD 140 Y___ N___	BY-PASS CODE	EXISTING ___ CHANGE TO ___	TLM CHECKED ___ %LOAD	J.P.A. NO. 406030189	ASSOCIATED DESIGN NO.
PRODUCT/SAP NO. 803203-INFRA REP - DET POLE REPLACE		PRODUCT/SAP NO.		PRODUCT/SAP NO.	

TYPE	APPROVED BY	DATE	CHECKED BY	DRAWN BY	PAX #
		3/31/14		T ASHER	

PROPOSED CONSTRUCTION (LOCATION)

E PINE ST S/S 150' E/O FAIR OAKS AVE
ALTADENA

SHEET ___ OF ___

JOB NO. 561318_0.01

Southern California Edison Company

POLE NO.	Pole Length / Anchor Size	Year Set	Pole Trt / Class / Anchor Direct.	Record E 4KV	Record HLA	Record	Record	Proposed E 4KV	Proposed HLA	Proposed	Proposed	Proposed	Item No.	LOCATION AND NATURE OF WORK If not in accordance with Joint Pole agreement and routine-state reasons.	
														E TO REPLACE POLE PER SEC. 5.0, 7.11, 10.8 AND 13.3	1
809619H	30	1971	FT CL5	CLEAR	ENT INT			PTD						E PINE ST S/S 150' E/O FAIR OAKS	2
								1					78A	HLA	3
								1					78B	HLA	4
															5
4829614E	35	2014	FT CL5					CLEAR	ENT INT					E PINE ST S/S 150' E/O FAIR OAKS	6
														SET NEW POLE 1' EAST	7
														CHANGE POLE CARD TO REFLECT POLE NUMBER CHANGE	8
															9
														E TO REP. POLE SEC. 5.0, 7.11, 10.8 , 12.12, 13.1 AND 13.3 1	10
809617H	45	1971	FT CL-2	0.5	.50 29' GR			PTD						RAYMOND AV E/S 35' N/O PENTAGON ST	11
	1		S	0.5	0.5			1					83	TRF HLA	12
								1					83	TRF CHTR	13
															14
4829616E	45	2014	T CL	0.5	.50 29' GR			38-9						RAYMOND AV E/S 34" N/O PENTAGON ST	15
	1		S	0.5	0.5			AT						CHANGE POLE CARD TO REFLECT POLE NUMBER CHANGE	16
														CHANGE RECORD TO REFLECT NEW ADDRESS	17
								1					20A	TRF HLA DG	18
															19

POLE LEGEND:
P = PULL (Item 5A)
PB = PULL BUTT
T = TRANSPORT (Item 5B)
S = SALVAGE
D = DISPOSE (Item 5D)
TN = TENANT
L = LOWER TOP(Item 5E)
C(XX) = FOOTAGE CUT
SCZ = SAFETY CLEARANCE ZONE

ANCHOR/ARM LEGEND:
AR = ANCHOR/ARM REMOVED
AT = ANCHOR/ARM TRANSFERRED

Show Quantity of Items to be billed in the Column of Party to be Paid.

GEOGRAPHICAL LOCATION

MONROVIA
COMMUNITY

Rev. Jul 2013