Pole c/s at 7234 TOLL DR. Rosemead/LA county

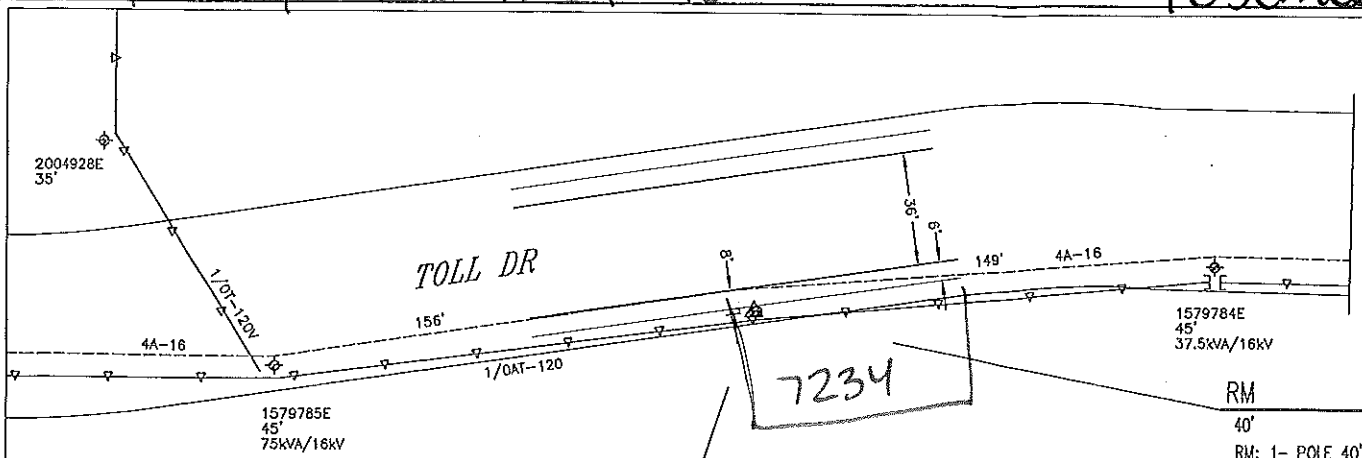


RISER DETAIL

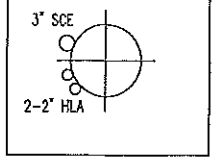


SCALE: 1" = 40'

0 40 80

LOMAS 16kV
MESA SUB
A1

RM 515963E (3)
40' Class C5
RM: 1- POLE 40' CLASS 5 WOOD FULL TREAT
RM: 1- MISC POLE TOP EXTENSION 5' STEEL & WOOD
RM: 1- XA SNGL FB 10' STEEL PINS
RM: 2- INS GLASS/POLY 35KV & LESS
RM: 1- XA SNGL FB 10' STEEL PINS SECONDARY
RM: 3- INS GLASS DE ROLLER #4 SOL
RM: 1- SEC 2" PVC FOR UNDER ARM W/#2 TW
RM: 2- SEC ROLLER (166-CLEVIS & SPOOL)
RM: 1- AG SPAN GUY 7/32" - 200'
TR: 2-#4A 16kV
TR: 3-#4B-120V (SEC)
TR: 1/0AT-120V (SEC)
TR: #4AT-120V (SVC DROPS)
TR: 6' STREET LIGHT
TR: 2"-3" RISER

POLE 515963E (4)
45' Class C3
IN: 1- POLE 45' CLASS 3 WOOD FULL TREAT
IN: 1- XA SNGL FB 10' STEEL PINS
IN: 2- INS POLY W/PIN 16(25)KV CLMP #4-336 ACSR
IN: 1- XA SNGL FB 10' STEEL PINS SECONDARY
IN: 3- INS GLASS DE ROLLER #4 SOL
IN: 1- SEC 2" PVC FOR UNDER ARM W/#2 TW
IN: 2- SEC ROLLER (166-CLEVIS & SPOOL)
IN: 1- AG SPAN GUY 7/32" - 200'
*SAME HOLE SET -- RISERS

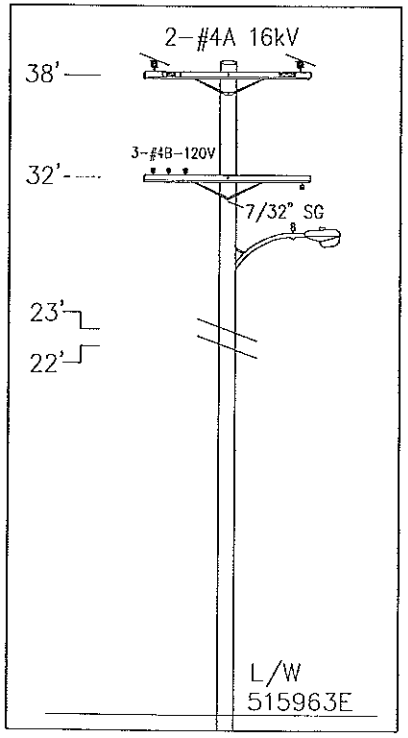


(P) JS 5.10.14

PROJECT REQUIREMENTS

| | |
|---|---|
| EDISON EASEMENT REQUIRED | N |
| PWRD 88 REQUIRED | N |
| PERMIT REQUIRED | Y |
| PERMIT TYPE: ENCROACHMENT | |
| OUTAGE REQUIRED | N |
| TRAFFIC CONTROL REQUIRED | Y |
| PED. TRAFFIC CONTROL REQ'D | Y |
| JPA REQ'D | Y |
| TENANT REQ'D | N |
| TRUCK ACCESS | Y |
| ENVIRONMENTAL | N |

C/S DIRT

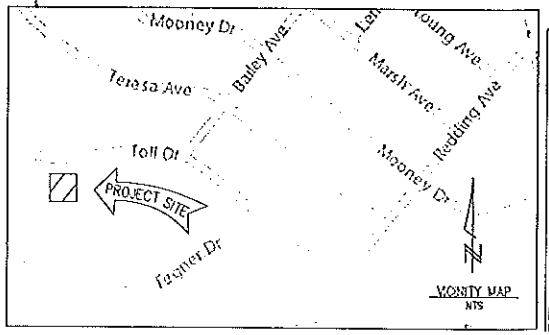


| | | | | | |
|---|---|---|---|---|---|
| DISTRICT 22 - MONTEBELLO | PROJ. MGR. RODRIGUEZ, JOHN T. PHONE 714-973-5678 | | PLANNER GRANILLO, KEVIN PHONE 949-375-6830 | | |
| FOREMAN | TRUCK NO. | P/E | INVENTORY MAP NO. 130-4254-1 | THOMAS GUIDE LA 636-D4 | GRID NO. |
| DESIGN NO. 566635_0.01 | | | | | |
| CSD 140 Y ___ N ___ | BY-PASS CODE | EXISTING ___ CHANGE TO ___ | TLM CHECKED ___ %LOAD | J.P.A. NO. | ASSOCIATED DESIGN NO. |
| PRODUCT/SAP NO. 811110-INFRA REP - DET POLE RELACE | | PRODUCT/SAP NO. | | PRODUCT/SAP NO. | |

PROPOSED CONSTRUCTION (LOCATION)
2014 DETERIORATED POLE REPLACEMENT
TOLL DR S/S 405' W/O BAILEY AV EXTD
SOUTH SAN GABRIEL, CA

| TYPE | APPROVED BY | DATE | CHECKED BY | DRAWN BY | PAX # |
|---|---|---|---|---|---|
| | | | | | |

SHEET 2 OF 4 | JOB NO. 566635 0.01

PAGE NO. 2 J.P. AUTH. NO.

| POLE NO. | Pole Length / Anchor Size | Year Set | Pole Trt / Class / Anchor Direct. | Record E | Record | Record HLA | Record | Record | Proposed E | Proposed | Proposed HLA | Proposed | Proposed | Proposed | Item No. | LOCATION AND NATURE OF WORK<br>If not in accordance with Joint Pole agreement and routine-state reasons. | |
|---|---|---|---|---|---|---|---|---|---|---|---|---|---|---|---|---|---|
| | | | | | | | | | | | | | | | | E TO REPLACE SECTIONS 7.4, 7.11 | 1 |
| 515963E | 40' | 37' | FT | .5 | | .5 / 23' | | | C-10 / PB | | LTD | | | | | TOLL DR S/S 405' W/O BAILEY AV EXTD | 2 |
| | | | 5 | | | | | | | | | | | | | SOUTH SAN GABRIEL | 3 |
| | | | | | | | | | 1/2(1) | | | | | | 5C | TOPPING | 4 |
| | | | | | | | | | 1/2(1) | | | | | | 19B | SAME HOLE W/ RISER ON STREET | 5 |
| | | | | | | | | | | | | | | | | | 6 |
| | | | | | | | | | | | | | | | | | 7 |
| | | | | | | | | | | | | | | | | SAME HOLE SET | 8 |
| 515963E | 45' | 14' | FT | | | | | | .5 | | .5 / 23' | | | | | TOLL DR S/S 405' W/O BAILEY AV EXTD | 9 |
| | | | 3 | | | | | | | | | | | | | SOUTH SAN GABRIEL | 10 |
| | | | | | | | | | | | | | | | | | 11 |
| | | | | | | | | | | | | | | | | | 12 |
| | | | | | | | | | | | | | | | | | 13 |
| | | | | | | | | | | | | | | | | | 14 |
| | | | | | | | | | | | | | | | | | 15 |
| | | | | | | | | | | | | | | | | | 16 |
| | | | | | | | | | | | | | | | | | 17 |
| | | | | | | | | | | | | | | | | | 18 |
| | | | | | | | | | | | | | | | | | 19 |

POLE LEGEND:
P = PULL
PB = PULL BUTT
T = TRANSPORT
S = SALVAGE
D = DISPOSE
TN = TENANT

L = LOWER CUT
C(XX)= FOOTAGE CUT
SCZ = SAFETY CLEARANCE ZONE

ANCHOR LEGEND:
AR = ANCHOR/ARM REMOVED
AT = ANCHOR/ARM TRANSFERRED

Show Quantity of Items to be billed in the Column of Party to be Paid.

GEOGRAPHICAL LOCATION

COMMUNITY

Rev. Jan 2010



3/27/2014 8:59 AM