Monterey Park

Pole located c/s at address 7208 Tegner Dr.

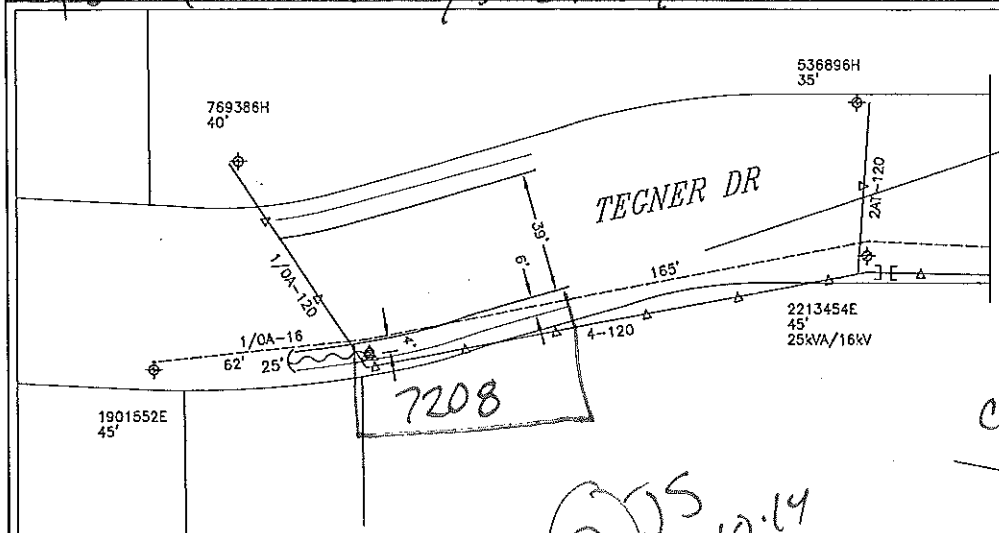

c/s CONCRETE

P OS 5.10.14

RM 515975E (1)
40' Class C5
RM: 1- POLE 40' CLASS 5 WOOD FULL TREAT
RM: 1- XA DBLE FB 10' STEEL PINS
RM: 4- INS GLASS/POLY 35KV & LESS
RM: 1- XA DBLE FB 10' STEEL PINS SECONDARY
RM: 3- INS GLASS DE ROLLER #4 SOL
RM: 1- SEC 2" PVC FOR UNDER ARM W/#2 TW
RM: 2- SEC 3-WIRE (284 RACK)
RM: 43- CD #2 AL 1/C WR
(SVC DROP)
RM: 1- AG SPAN GUY 7/32" - 200'
RM: 2- AG DOWN GUY 3/8" - 50' LESS THAN 22.5KV
TR: 2-1/0A 16kV
TR: 3-#4B-120V (SEC)
TR: 1/0AT-120V (SEC)
TR: #4AT-120V (SVC DROPS)
TR: 6' STREET LIGHT

N

SOUTHERN CALIFORNIA EDISON
An EDISON INTERNATIONAL Company

SCALE: 1" = 40'
0 40 80

LOMAS 16kV
MESA SUB
A1

POLE 515975E (2)
45' Class C3
IN: 1- POLE 45' CLASS 3 WOOD FULL TREAT
IN: 1- XA DBLE FB 10' STEEL PINS
IN: 4- INS POLY DE 16KV HOT SHOE #4 & 1/0 ACSR
IN: 2- INS POLY W/PIN 16(25)KV CLMP #4-336 ACSR
IN: 1- XA SNGL FB 10' STEEL PINS SECONDARY
IN: 1- INS GLASS DE ROLLER #4 SOL
IN: 1- SEC 2" PVC FOR UNDER ARM W/#2 TW
IN: 2- SEC ROLLER (166-CLEVIS & SPOOL)
IN: 43- CD 1/0 STR AL TRIPLEX W/ACSR NEUTRAL
(SVC DROP)
IN: 1- AG SPAN GUY 7/32" - 200'
IN: 2- AG DOWN GUY 3/8" - 50' LESS THAN 22.5KV
*SAME HOLE SET

*NOTE: RM EX DOWN GUYS AND INSTALL AS SHOWN BELOW.

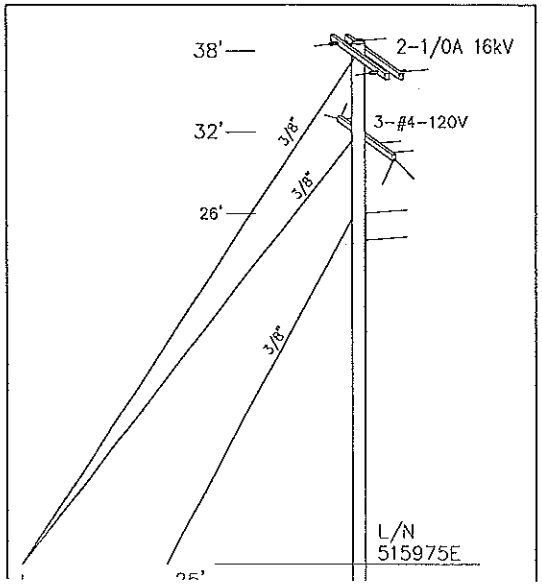

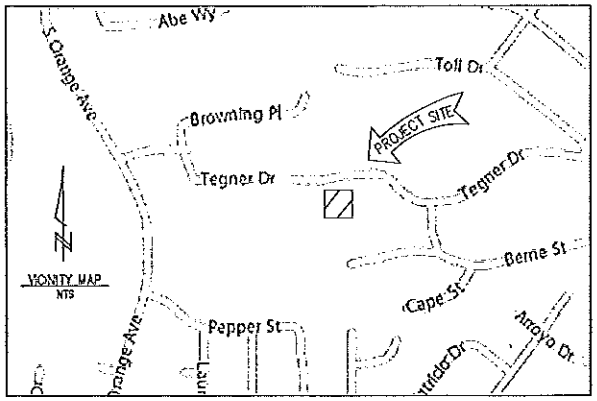

PROJECT REQUIREMENTS	
EDISON EASEMENT REQUIRED	N
PWRD 88 REQUIRED	N
PERMIT REQUIRED	Y
PERMIT TYPE: ENCROACHMENT	
OUTAGE REQUIRED	Y
TRAFFIC CONTROL REQUIRED	Y
PED. TRAFFIC CONTROL REQ'D	Y
JPA REQ'D	Y
TENANT REQ'D	N
TRUCK ACCESS	Y
ENVIRONMENTAL	N

DISTRICT 22 - MONTEBELLO	PROJ. MGR. RODRIGUEZ, JOHN T. PHONE 714-973-5678	PLANNER GRANILLO, KEVIN PHONE 949-375-5830	
FOREMAN	TRUCK NO. / P/E	INVENTORY MAP NO. 130-4254-1 / THOMAS GUIDE LA 636-D4 / GRID NO.	DESIGN NO. 566635_0.01
CSD 140 Y___ N___	BY-PASS CODE / EXISTING CHANGE TO	TLM CHECKED ___ %LOAD / J.P.A. NO.	ASSOCIATED DESIGN NO.
PRODUCT/SAP NO. 811110-INFRA REP - DET POLE RELACE	PRODUCT/SAP NO.	PRODUCT/SAP NO.	

PROPOSED CONSTRUCTION (LOCATION)
2014 DETERIORATED POLE REPLACEMENT
TEGNER DR S/S 1460' W/O TOLL DR
SOUTH SAN GABRIEL, CA

TYPE	APPROVED BY	DATE	CHECKED BY	DRAWN BY	PAX #

SHEET 1 of 1 — JOB NO. 566635_0.01

AUTHORIZATION FOR JOINT POLE TRANSACTION

J.P. FORM 2-1 Preliminary 1/95

This authorization is in accordance with Joint Pole Agreement and Routine. The undersigned have agreed on joint work as specified hereon.

Date Prepared 03/27/2014

Date Sent _____ Confirming Agreement _____ In Field _____ By Telephone _____ Est. Const. Start _____ No. of Pages 4 J.P. Auth.No. _____

UTILITY	REPRESENTATIVE	DISTRICT-DIVISION-EXCHANGE	APPROVED	TAXING INSTRUCTIONS	ACCOUNTING DATA
E	KEVIN A. GRANILLO	MONTEBELLO	Ronnie R Fruto	MONTEREY PARK	TD 811110
HLA					

POLE NO.	Pole Length / Anchor Size	Year Set	Pole Trt / Class / Anchor Direct.	Record E	Record	Record HLA	Record	Record	Proposed E	Proposed	Proposed HLA	Proposed	Proposed	Proposed	Item No.	LOCATION AND NATURE OF WORK (If not in accordance with Joint Pole agreement and routine-state reasons.)	
																E TO REPLACE SECTION 7.4, 7.11, 12.12, 19.6	1
515975E	40'	37'	FT			26'			C-9 / PB		LTD					TEGNER DR S/S 1460' W/O TOLL DR	2
			5													SOUTH SAN GABRIEL	3
	1"		W	.5		.5					AT						4
									1/2(1)						5C	TOPPING	5
									1/2(1)						19A	SAME HOLE W/O RISER ON STREET	6
									1/2(1)						10A	CEMET BREAK & REPAIR	7
																	8
																	9
																SAME HOLE SET FOR SIDEWALK CLEARANCE	10
515975E	45'	14'	FT								26'					TEGNER DR S/S 1460' W/O TOLL DR	11
			3													SOUTH SAN GABRIEL	12
	1"		W						.5		.5						13

VP/J.P.-03

Rev. Jan 2010

POLE LEGEND:
P = PULL
PB = PULL BUTT
T = TRANSPORT
S = SALVAGE
D = DISPOSE
TN = TENANT

L = LOWER CUT
C(XX)= FOOTAGE CUT
SCZ = SAFETY CLEARANCE ZONE

ANCHOR LEGEND:
AR = ANCHOR/ARM REMOVED
AT = ANCHOR/ARM TRANSFERRED

Show Quantity of Items to be billed in the Column of Party to be Paid.

GEOGRAPHICAL LOCATION

COMMUNITY

3/27/2014 8:59 AM