OVERHILL 4KV O/O WINDSOR HILLS

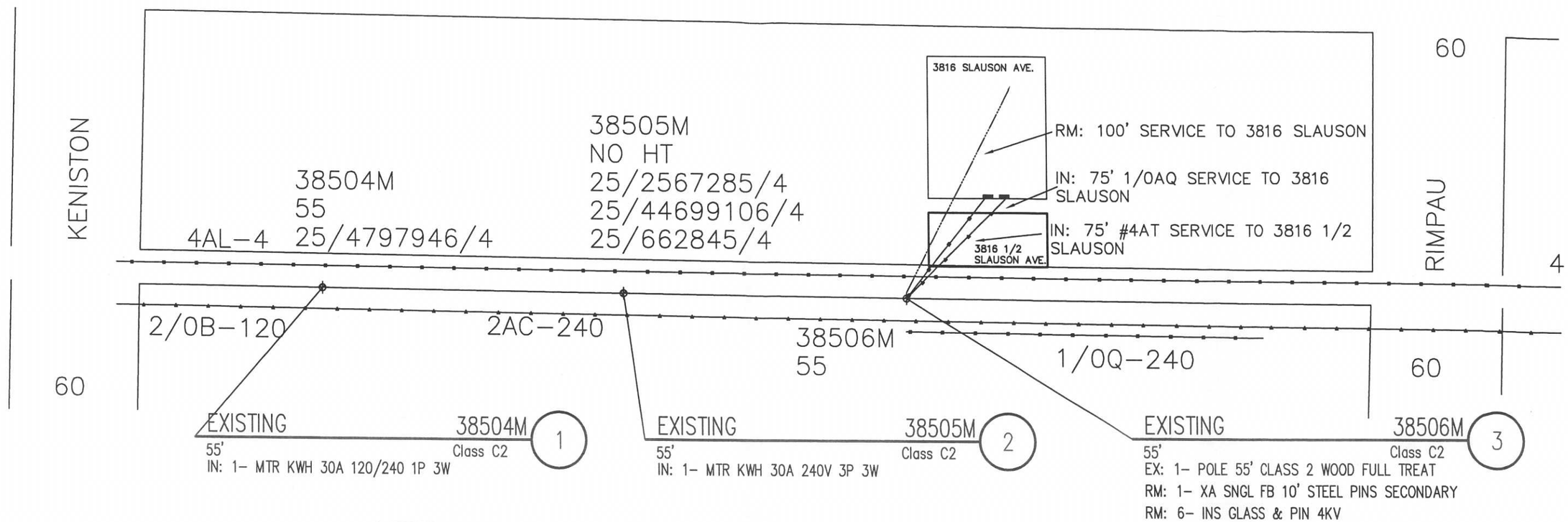

CREW NOTE:
RM: SCE 10' SINGLE SECONDARY XARM AT POLE 38506M
RM: 100' SERVICE TO 3816 SLAUSON AVE.
IN: 10' DOUBLE XARM AND UNDER ARM FIBER IN ORDER TO SERVE 3P AND 1 P LOAD TO 3816 AND 3816 1/2 SLAUSON.
IN: 75' 1/0AQ TO 3816 SLAUSON
IN: 75' #4AT TO 3816 1/2 SLAUSON

-FEED 3P LOAD FROM XFMR 38505M
-FEED 1P LOAD FROM XFMR 38504M

PROJECT REQUIREMENTS

EDISON EASEMENT REQUIRED	N
PWRD 88 REQUIRED	N
PERMIT REQUIRED	Y
PERMIT TYPE: ENCROACHMENT	
OUTAGE REQUIRED	N
TRAFFIC CONTROL REQUIRED	N
PED. TRAFFIC CONTROL REQ'D	N
CONVEYANCE LETTER REQ'D	N

SCALE: 1 IN = 50 FT

SOUTHERN CALIFORNIA EDISON
An EDISON INTERNATIONAL Company

DISTRICT 44 - SOUTH BAY	PROJ. MGR. VAN TASSEL, BRANDON PHONE		PLANNER VAN TASSEL, BRANDON PHONE 310-912-9345		
FOREMAN	TRUCK NO.	P/E	INVENTORY MAP NO. 56-66A	THOMAS GUIDE	GRID NO.
DESIGN NO. 610080_0.01					
CSD 140 Y___ N___	BY-PASS CODE	EXISTING ___ CHANGE TO ___	TLM CHECKED ___ %LOAD	J.P.A. NO.	ASSOCIATED DESIGN NO.
PRODUCT/SAP NO. 875540-METER & SERVICE CHANGE	PRODUCT/SAP NO.			PRODUCT/SAP NO.	

TYPE	APPROVED BY	DATE	CHECKED BY	DRAWN BY	PAX #
	PEARSON			VAN TASSEL	

PROPOSED CONSTRUCTION (LOCATION)
3816 W SLAUSON AVE
LOS ANGELES

SHEET 1 OF 1

JOB NO. 610080_0.01

Southern California Edison Company