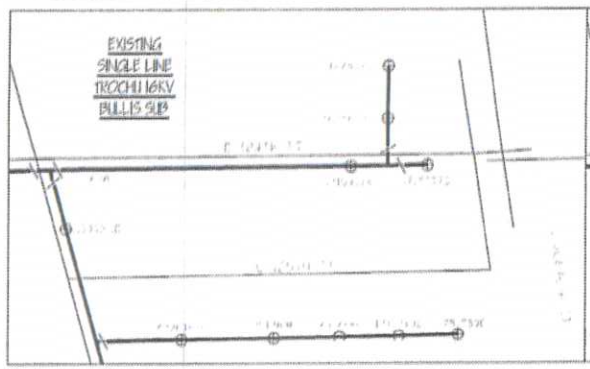

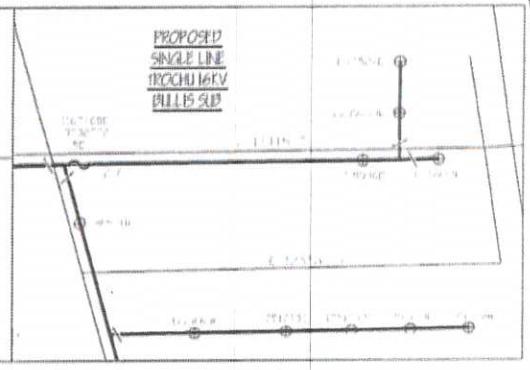

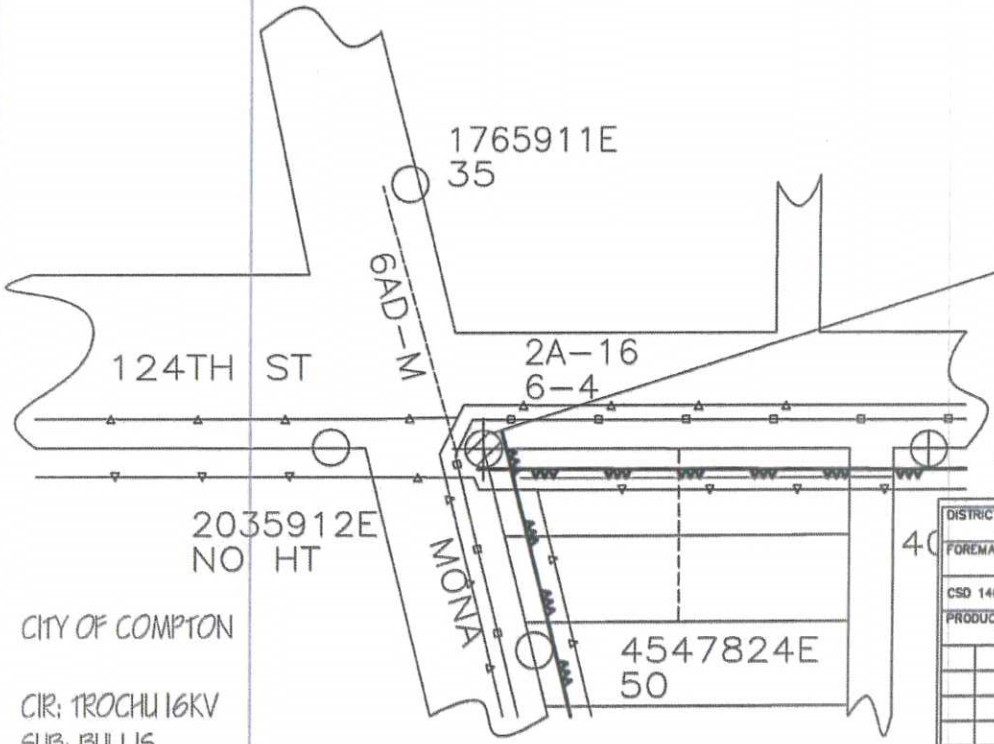

EXISTING 1167468E (1)
50' Class C4
IN: 3- FE FH SMD20 17" BLF 200A 16KV 3P
BF32772
IN: 3- FE FUSE SMU20 17KV 15E

N

SOUTHERN CALIFORNIA EDISON
An EDISON INTERNATIONAL Company

SCALE: 1" = 40'
0 40 80

DISTRICT 32 - COMPTON	PROJ. MGR. PHONE		PLANNER BROWNING, CORNELIUS PHONE 310-608-5070		
FOREMAN	TRUCK NO.	P/E	INVENTORY MAP NO. 082-4218-1	THOMAS GUIDE 734-J1	GRID NO.	DESIGN NO. 615755_0.01
CSD 140 Y N	BY-PASS CODE	EXISTING CHANGE TO	TLM CHECKED	%LOAD	J.P.A. NO.	ASSOCIATED DESIGN NO.
PRODUCT/SAP NO. 883781-PLANT BETTERMENT			PRODUCT/SAP NO. UPGRADING DISTRIBUTION FACILITIES		PRODUCT/SAP NO.
			C.BROWNING	35070	PROPOSED CONSTRUCTION (LOCATION) 12404 S MONA BLVD COMPTON
TYPE	APPROVED BY	DATE	CHECKED BY	DRAWN BY	PAX #	SHEET 1 OF 1	JOB NO. 615755_0.01

Southern California Edison Company

Mona Blvd.

124th St

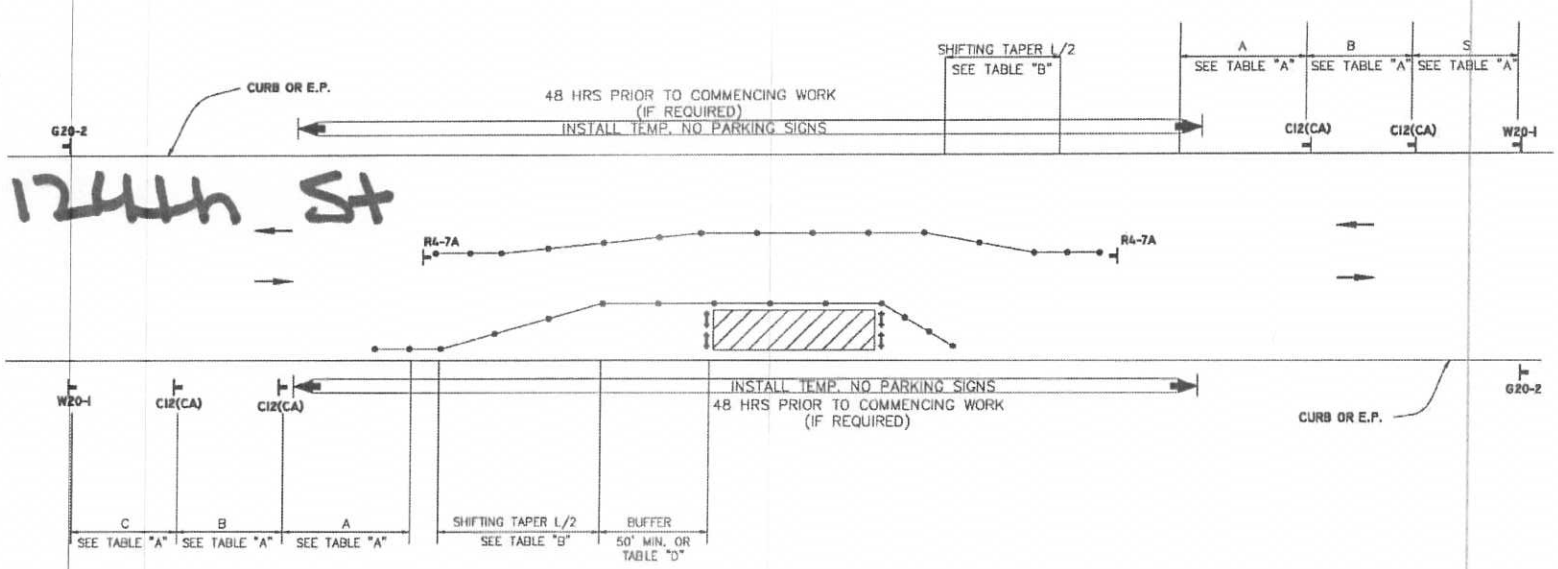

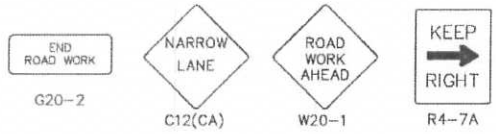

LEGEND

- TYPE III BARRICADE W/SIGN
- TYPE II BARRICADE W/O SIGN
- CHANNELIZING DEVICE
- TRAFFIC CONE WITH CLIP ON SIGN
- SIGN
- (S) SIGNALIZED INTERSECTION
- ARROW PANEL (FLASHING ARROW) (WHERE REQUIRED)
- HIGH LEVEL WARNING DEVICE (FLAGTREE) (OPTIONAL)
- FLAGGER
- TANS TOW AWAY NO STOPPING ___ TO ___ (SHOW HOURS)
- TANSAT TOW AWAY NO STOPPING ANY TIME
- WORK ZONE (ACTIVITY AREA) LIMITS
- DIRECTION OF TRAFFIC (NOT PAVEMENT MARKING)
- (A) ROADWAY DESIGNATION (A THROUGH D)

N

INDICATE NORTH WITH A "N" AND AN ARROW POINT

DATES OF TEMPORARY NO PARKING ZONE

WORKSITE TRAFFIC CONTROL PLAN
SIDE OF ROAD WORK
TWO LANE TRAFFIC CONTROL
WITHOUT CENTERLINE

DATE

SCALE NONE

DRAWING NO. 1

REV. APR-2010 CJ/TCM-DWG01.DWG