HFIA

C/S @ 2410 LAS LOMITAS DR

LACO

PERMIT NEEDED

H&M HENKELS & McCOY

STATIONS 1 & 2

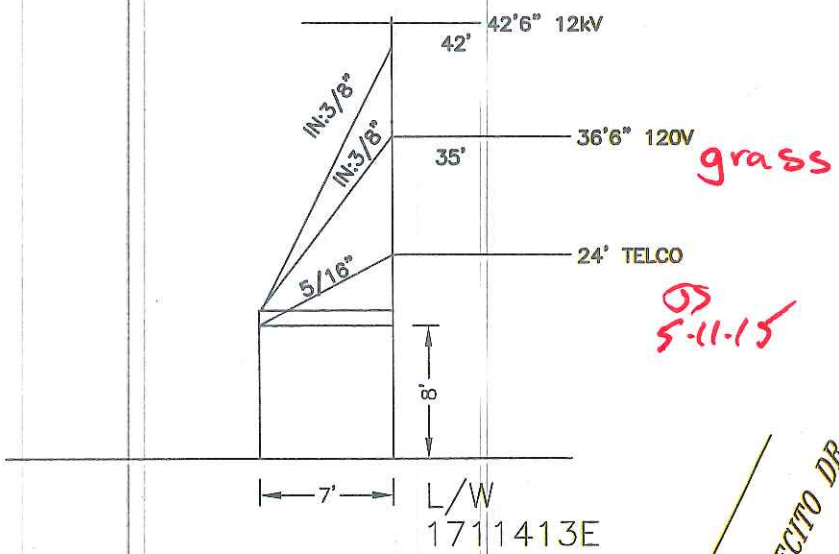

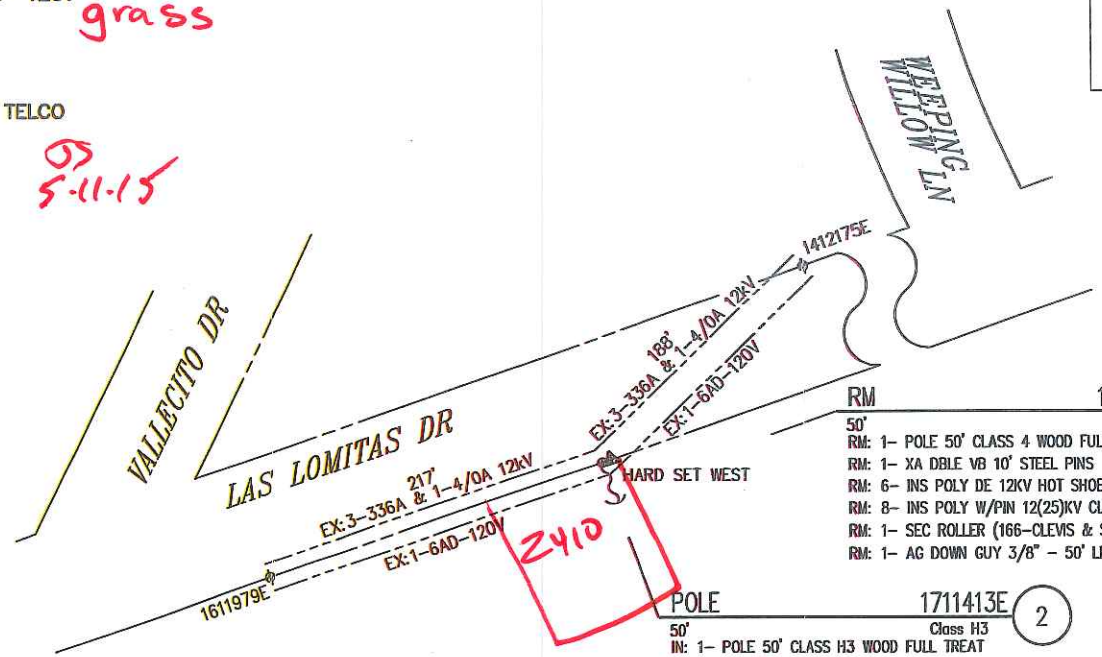

RM 1711413E (1)
50' Class C4
RM: 1- POLE 50' CLASS 4 WOOD FULL TREAT
RM: 1- XA DBLE VB 10' STEEL PINS
RM: 6- INS POLY DE 12KV HOT SHOE 336 ACSR
RM: 8- INS POLY W/PIN 12(25)KV CLMP #4-336 ACSR
RM: 1- SEC ROLLER (166-CLEVIS & SPOOL)
RM: 1- AG DOWN GUY 3/8" - 50' LESS THAN 22.5KV

POLE 1711413E (2)
50' Class H3
IN: 1- POLE 50' CLASS H3 WOOD FULL TREAT
IN: 1- XA DBLE VB 10' STEEL PINS
IN: 6- INS POLY DE 12KV HOT SHOE 336 ACSR
IN: 9- INS POLY W/PIN 12KV CLMP #4-653 ACSR
IN: 1- SEC ROLLER (166-CLEVIS & SPOOL)
IN: 2- AG DOWN GUY 3/8" - 50' LESS THAN 22.5KV
IN: 1- AG SIDEWALK GUY

RANSFERS:
- 336A 12kV (E&W)
- 4/0A 12kV (E&W)
- 6AD 120V (E&W)
- 6' ST/LT
- 1/4" MSGRS

PROJECT REQUIREMENTS	
RIGHTS CHECK REQUIRED	Y
ENVIRO REVIEW REQUIRED	N
PERMIT REQUIRED	Y
ERMIT TYPE:	
OUTAGE REQUIRED	Y
TRAFFIC CONTROL REQ'D	Y
ED. TRAFFIC CONTROL REQ'D	Y
PAVEMENT REPAIR REQ'D	N
ASPH N	CONC N	SIZE N/A

POLE DETAILS	
JOINT POLE:	Y
RENTER:	Y
MITC FUME:	N
JOINT MEET:	N
TRUCK ACCESS:	Y
HAND SET:	N

GPS COORDINATES	
N	33°-59'-46.2"
W	117°-58'-57.4"

N

SOUTHERN CALIFORNIA EDISON
An EDISON INTERNATIONAL Company
NOT TO SCALE

DISTRICT 26 - COVINA	PROJ. MGR. RODRIGUEZ, JOHN T PHONE 909-469-0219	PLANNER CARRILLO, CHRIS PHONE 909-469-7169	DESIGNER FELIX, DAVID
PROJECT NO. 977876	SERVICE REQUEST 1900643	MSR NO.	PRODUCT-1 931841-INFRA REPLAC - DET POLE REPLACEMENT
CIRCUIT / VOLTAGE CHELLA 12kV	THOMAS GUIDE 678 A4	PRODUCT-2	
SUB / PG NO. WALNUT	CIRCUIT CODE 03388	PRODUCT-3	
INVENTORY MAP 110-4293-1	J.P.A. NO. 406776696	PROPOSED CONSTRUCTION (LOCATION) 2410 LAS LOMITAS DR HACIENDA HEIGHTS	

TYPE	DATE	APPROVED BY	CHECKED BY	DRAWN BY	PAX #	SHEET	DESIGN\DRWG NO.

PAGE NO. 2 J.P. AUTH. NO. E6026-406776696

POLE NO.	Pole Length / Anchor Size	Year Set	Pole Trt / Class / Anchor Direct.	Record 12KV E	Record VZ	Record	Record	Proposed 12KV E	Proposed VZ	Proposed	Proposed	Proposed	Item No.	LOCATION AND NATURE OF WORK If not in accordance with Joint Pole agreement and routine-state reasons.	
														E TO REPLACE PER SEC. 7.11, 10.3, 12.9	1
1711413E	50	1966	FT	.65	24'			C-10						LAS LOMITAS DR S/S 295' E/O LA CUESTA AV	2
								LTD							3
													5c	TOPPING POLE	4
	1"	1969	SW	.50	.50				ALL				111F		5
	2"	PBR	S					1					83	COM MESS	6
															7
															8
															9
1711413E	50	2015	FT H3					43-12	24-6					LAS LOMITAS DR S/S 294' E/O LA CUESTA AV	10
								25-1						HARD SET WEST	11
								TN25							12
															13
															14
															15
															16
															17
															18
															19

EGEND: L = LOWER TOP(Item 5E)
. (Item 5A) C(XX) = FOOTAGE CUT
LL BUTT SCZ = SAFETY CLEARANCE ZONE
NSPORT (Item 5B)
VAGE
OSE (Item 5D)
ANT

ANCHOR/ARM LEGEND:
AR = ANCHOR/ARM REMOVED
AT = ANCHOR/ARM TRANSFERRED

Show Quantity of Items to be billed in the Column of Party to be Paid.

GEOGRAPHICAL LOCATION

COVINA
COMMUNITY

Rev. Jul 2013