P 4.27.15 T

PERMIT NEEDED

HFIA ' YELL"

HACIENDA HEIGHTS

POLE LOC. AT CURB W/SIDE HACIENDA BLVD.
95' S/OF WIND RUSH DR.

H&M HENKELS & McCOY

STATIONS 9 & 10

PC OK.

9 RM 1813715E
45' Class C4
RM: 1– POLE 45' CLASS 4 WOOD FULL TREAT
RM: 1– XA SNGL FB 10' STEEL PINS
RM: 1– XA SNGL FB 5' STEEL PINS
RM: 2– INS POLY DE 12KV HOT SHOE #4 & 1/0
RM: 1– GR OH #6 SOL WP PRIMARY W/ROD
RM: 1– SA POLY W/GND NO PRI–N 12KV 1P
RM: 1– AG DOWN GUY 9/32" – 50' LESS THAN 22.5KV
RM: 1– AG SIDEWALK GUY IN CONC.

10 POLE 1813715E
45' Class H1
IN: 1– POLE 45' CLASS H1 WOOD FULL TREAT
IN: 2– XA SNGL FB 10' STEEL PINS
IN: 2– INS POLY DE 12KV HOT SHOE #4 & 1/0
IN: 1– SA POLY W/GND NO PRI–N 12KV 1P
IN: 1– AG DOWN GUY 3/8" – 50' LESS THAN 22.5KV
IN: 1– AG SIDEWALK GUY

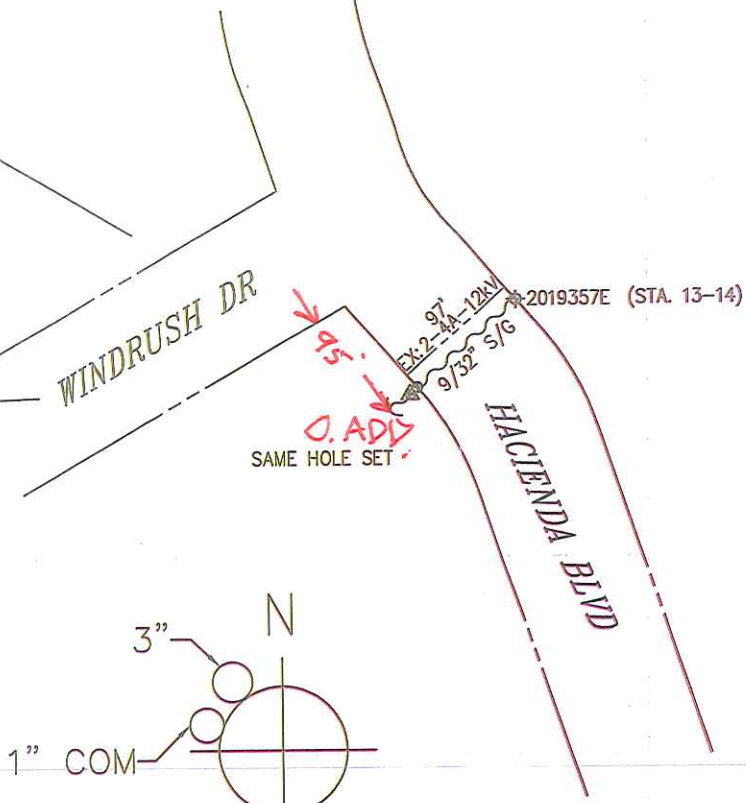

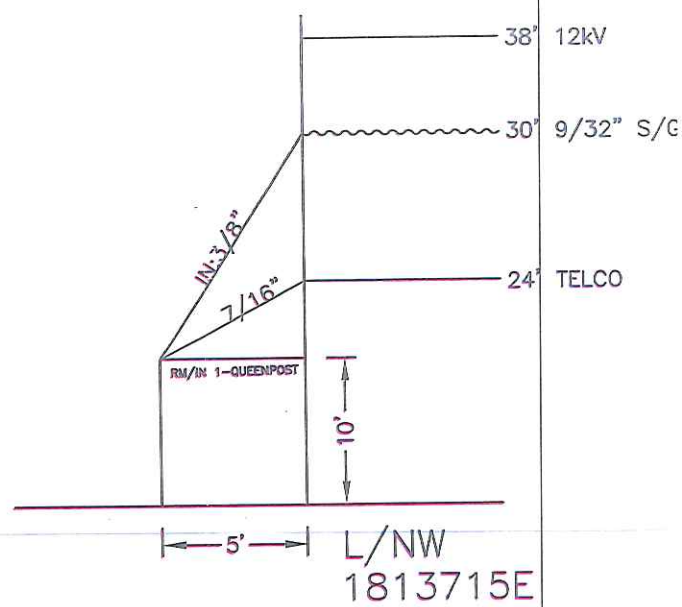

TRANSFERS:
2– 4A 12kV (SW)
1– FUSE HOLDER
1– 9/32" S/G (NE)
1–POTHEAD
1–RISER
*SAME HOLE SET DUE TO RISER

PROJECT REQUIREMENTS	
RIGHTS CHECK REQUIRED	N
ENVIRO REVIEW REQUIRED	N
PERMIT REQUIRED	Y
PERMIT TYPE:	
OUTAGE REQUIRED	N
TRAFFIC CONTROL REQ'D	Y
PED. TRAFFIC CONTROL REQ'D	Y
PAVEMENT REPAIR REQ'D	Y
ASPH	N
CONC	Y
SIZE	4x4

POLE DETAILS	
JOINT POLE:	Y
RENTER:	N
MITC FUME:	N
JOINT MEET:	Y
TRUCK ACCESS:	Y
HAND SET:	N

GPS COORDINATES	
N	33°–58'–44.7"
W	117°–58'–18.7"

N

SOUTHERN CALIFORNIA EDISON
An EDISON INTERNATIONAL Company

NOT TO SCALE

DISTRICT 26 – COVINA	PROJ. MGR. RODRIGUEZ, JOHN T PHONE 909–469–0219	PLANNER MASANGKAY, REY PHONE 909–469–7174	DESIGNER FELIX, DAVID
PROJECT NO. 1002593	SERVICE REQUEST 1925058	MSR NO.	PRODUCT–1 951120–INFRA REPLAC – DET POLE REPLACEMENT
CIRCUIT / VOLTAGE KWIS 12kV		THOMAS GUIDE 678 B6	PRODUCT–2
SUB / PG NO. WALNUT		CIRCUIT CODE 09885	PRODUCT–3
INVENTORY MAP 104–4296–1	J.P.A. NO.		PROPOSED CONSTRUCTION (LOCATION) HACIENDA BL W/S 415' N/O RICHVIEW LA PUENTE

TYPE	DATE	APPROVED BY	CHECKED BY	DRAWN BY	PAX #	SHEET	DESIGN\DRWG NO.

PAGE NO. 4 J.P. AUTH. NO. E6026-406766200

POLE NO.	Pole Length / Anchor Size	Year Set	Pole Trt / Class / Anchor Direct.	Record 12KV E	Record VZ	Record ATC	Record	Proposed 12KV E	Proposed VZ	Proposed ATC	Proposed	Proposed	Item No.	LOCATION AND NATURE OF WORK If not in accordance with Joint Pole agreement and routine-state reasons.	
														E TO REPLACE PER SEC. 7.11, 13.3, 12.12, 7.4	1
1813715E	45	1969	FT	39-7	25-7	26-1		C-10 PB	LTD					HACIENDA BL W/S 415' N/O RICHVIEW, LA HABRA HEIGHTS	2
								1/3(1)					5C	TOP POLE	3
								1/3(1)					10C	4X4	4
	1"	1969	W	.50	.50			AT							5
	2"	1969	PBR	.50	.50			AT							6
															7
1813715E	45	2015	FT H1					39-7	25-7	26-1				HACIENDA BL W/S 415' N/O RICHVIEW, HACIENDA HEIGHTS	8
									TN 25					NOTE: CORRECTION OF CITY	9
								1/3(1)					19C		10
															11
															12
															13
															14
															15
															16
															17
															18
															19

POLE LEGEND:
P = PULL (Item 5A)
PB = PULL BUTT
T = TRANSPORT (Item 5B)
S = SALVAGE
D = DISPOSE (Item 5D)
TN = TENANT

L = LOWER TOP(Item 5E)
C(XX) = FOOTAGE CUT
SCZ = SAFETY CLEARANCE ZONE

ANCHOR/ARM LEGEND:
AR = ANCHOR/ARM REMOVED
AT = ANCHOR/ARM TRANSFERRED

Show Quantity of Items to be billed in the Column of Party to be Paid.

GEOGRAPHICAL LOCATION

HACIENDA HEIGHTS
COMMUNITY

Rev. Jul 2013