WORK ON SIDE OF RD
SCE TO PTD

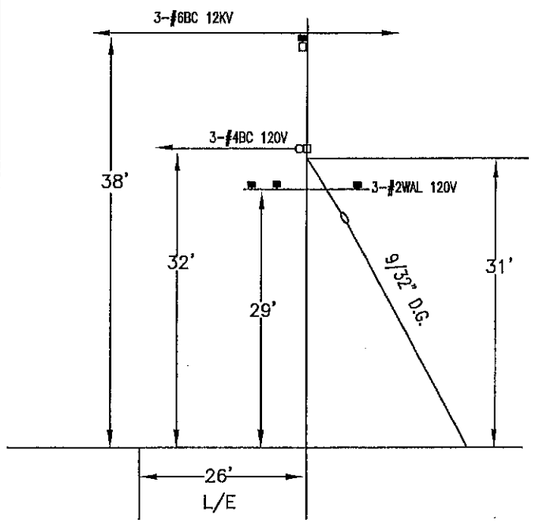

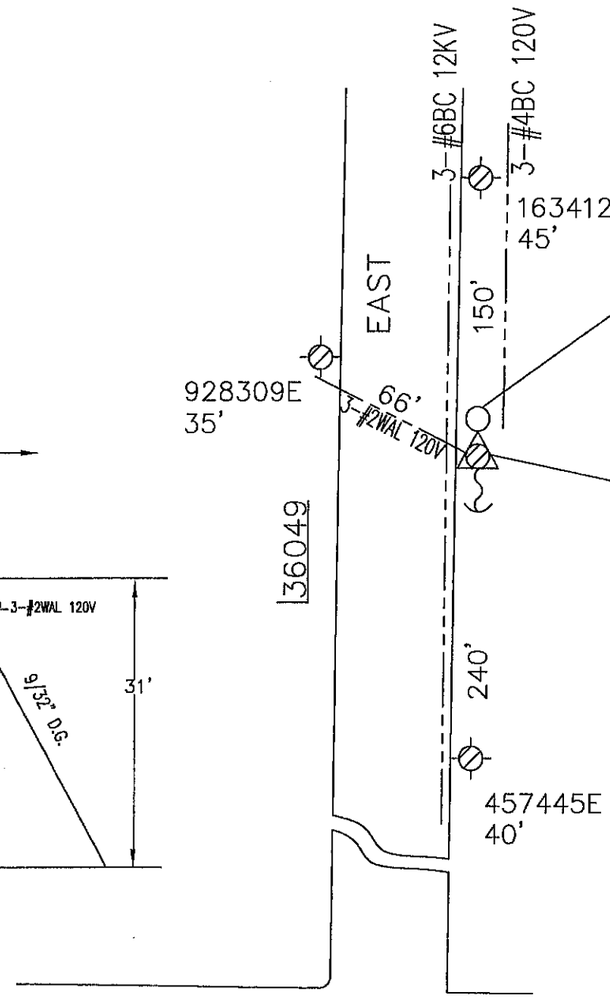

IN 457446E (12)
45' Class C4
IN: 1- POLE 45' CLASS 4 WOOD FULL TREAT
IN: 1- XA SNGL FB 10' STEEL PINS
IN: 3- INS POLY W/PIN 12KV CLMP #6-4/0 CU
IN: 1- XA DBLE FB 10' STEEL PINS SECONDARY
IN: 6- SEC ROLLER (166-CLEVIS & SPOOL)
IN: 2- SEC STEEL PIN & INS - PHASE
IN: 1- SEC STEEL PIN & INS - NEUTRAL
IN: 1- XA SNGL FB 10' STEEL PINS SECONDARY
IN: 1- AG DOWN GUY 9/32" - 50' LESS THAN 22.5KV
IN: 1- MISC AVIAN HOOD FOR HENDRIX INSUL #4-653

RM 457446E (11)
40' Class C4
RM: 1- POLE 40' CLASS 4 WOOD FULL TREAT
RM: 1- XA SNGL VB 10' STEEL PINS
RM: 7- INS GLASS/POLY 35KV & LESS
RM: 1- XA DBLE FB 8' STEEL PINS SECONDARY
RM: 3- SEC ROLLER (166-CLEVIS & SPOOL)
RM: 1- XA SNGL FB 10' STEEL PINS SECONDARY
RM: 1- AG DOWN GUY 9/32" - 50' LESS THAN 22.5KV
NOTE:

SET HARD NORTH
E TO PTD

NOTE TO CREW

TRANSFER:

3-#6BC 12KV
3-#4BC 120V
3-#2WAL 120V
1-CATV

NOTES:

CIRCUIT: CALIBER 12KV
SUB: PALMDALE
CIRCUIT:
SUB:
REAR PROPERTY NO
TRUCK ACCESS YES
HAND DIG NO
TRAFFIC CONTROL NO
PTC NO
ROUTE #
BULLETIN 322 NO
ENVIRONMENTAL NO
PERMIT REQ'D NO
TYPE
TREE TRIMMING NO
CONCRETE REPAIR REQ'D NO
CRANE SET NO
GPS:
LAT: 34° 32' 13.0"
LON: 117° 59' 17.3"
ELEV: 2803'

80TH ST

SOUTHERN CALIFORNIA EDISON
An EDISON INTERNATIONAL Company

NOT TO SCALE

UNDERGROUND SERVICE ALERT
Dial 811
Call USA
For Underground Locating
2 Working Days Before You Dig

DISTRICT 36 - ANTELOPE VALLEY	PROJ. MGR. RODRIGUEZ, JOHN THEODORE PHONE 714 973-5678		PLANNER TAYLOR, RAND/HWI PHONE 951 826-8853		
FOREMAN	TRUCK NO.	P/E	INVENTORY MAP NO. 122-86	THOMAS GUIDE 4287 G-6	GRID NO.
DESIGN NO. 498895_0.01					
CSD 140 Y ___ N X	BY-PASS CODE	EXISTING ___ CHANGE TO ___	TLM CHECKED ___ %LOAD	J.P.A. NO.	ASSOCIATED DESIGN NO.
PRODUCT/SAP NO. 710755-INFRASTRUCTURE REPLACEMENT - DET POLE REPLACEMENT			PRODUCT/SAP NO. SR# 1632202		PRODUCT/SAP NO. PROJECT# 703447

TYPE	APPROVED BY	DATE	CHECKED BY	DRAWN BY	PAX #
				HWI/CC	

PROPOSED CONSTRUCTION (LOCATION)
TD710755
36049 80TH ST EAST
LITTLEROCK

SHEET ___ OF ___

JOB NO. 498895_0.01

Southern California Edison Company