WORK ON SIDE OF RD
SEE TO PTD

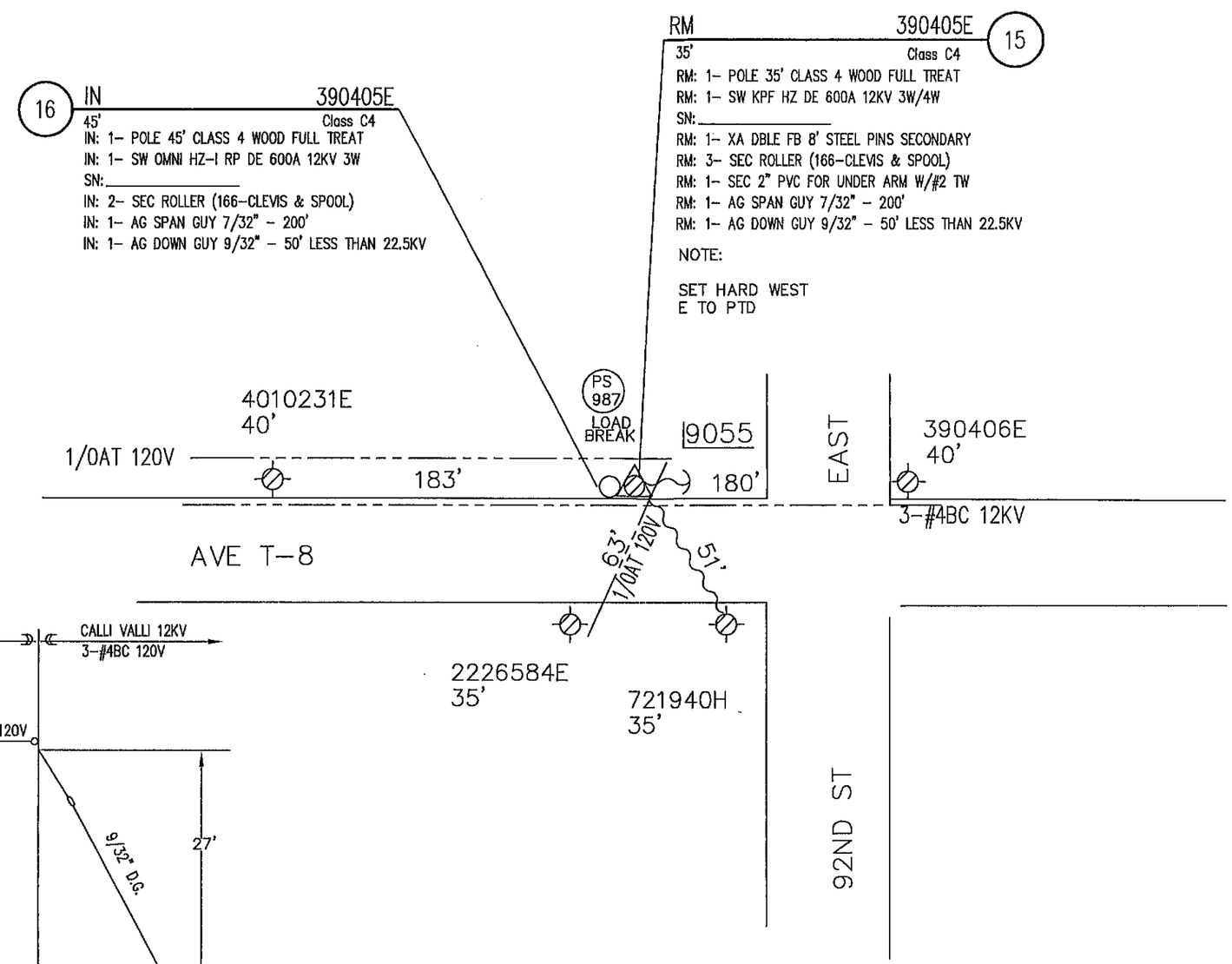

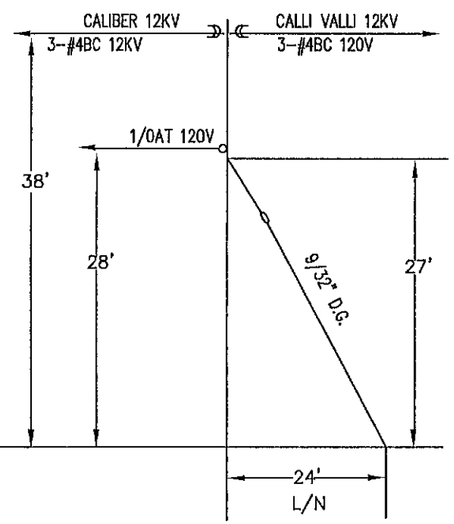

NOTE TO CREW

TRANSFER:

6-#4BC 12KV
2-1/0AT 120V
1-#4AT SVC
1-CATV

NOTES:

CIRCUIT: CALIBER 12KV
SUB: PALMDALE
CIRCUIT: CALLI VALLI 12KV
SUB: LITTLEROCK
REAR PROPERTY NO
TRUCK ACCESS YES
HAND DIG NO
TRAFFIC CONTROL NO
PTC NO
ROUTE #
BULLETIN 322 NO
ENVIRONMENTAL NO
PERMIT REQ'D NO
TYPE
TREE TRIMMING NO
CONCRETE REPAIR REQ'D NO
CRANE SET NO
GPS:
LAT: 34° 32' 08.7"
LON: 117° 58' 01.8"
ELEV: 2865'

SOUTHERN CALIFORNIA EDISON
An EDISON INTERNATIONAL Company

NOT TO SCALE

UNDERGROUND SERVICE ALERT
Dial 811
Call USA
For Underground Locating
2 Working Days Before You Dig

DISTRICT 36 - ANTELOPE VALLEY	PROJ. MGR. RODRIGUEZ, JOHN THEODORE PHONE 714 973-5678		PLANNER TAYLOR, RAND/HWI PHONE 951 826-8853		
FOREMAN	TRUCK NO.	P/E	INVENTORY MAP NO. 122-87	THOMAS GUIDE 4288 A-6	GRID NO.	DESIGN NO. 498895_0.01
CSD 140 Y ___ N X	BY-PASS CODE	EXISTING ___ CHANGE TO ___	TLM CHECKED ___ %LOAD	J.P.A. NO.	ASSOCIATED DESIGN NO.
PRODUCT/SAP NO. 710755-INFRASTRUCTURE REPLACEMENT - DET POLE REPLACEMENT	PRODUCT/SAP NO. SR# 1632202	PRODUCT/SAP NO. PROJECT# 703447			

TYPE	APPROVED BY	DATE	CHECKED BY	DRAWN BY	PAX #
				HWI/CC	

Southern California Edison Company

PROPOSED CONSTRUCTION (LOCATION)
TD710755
9055 AVE T-8
LITTLEROCK

SHEET ___ OF ___

JOB NO. 498895_0.01