BX SYSTEM

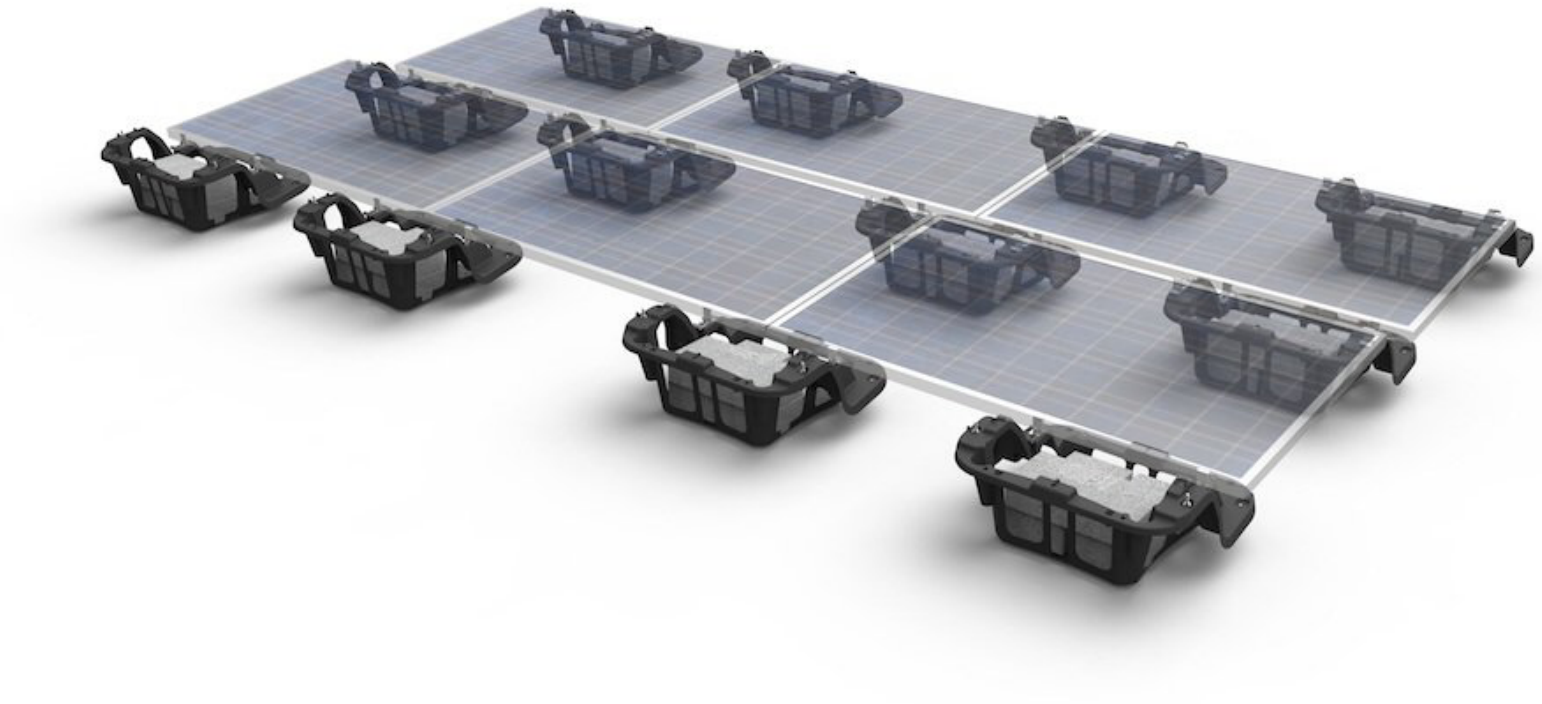

INSTALLATION MANUAL

IRONRIDGE

CONTENTS

DISCLAIMER 1
RATINGS 2
MARKINGS 2
CHECKLIST 3
OVERVIEW 4
INSTALLATION STEPS (QUICK GUIDE) 5
1. MARK LAYOUT 6
2. PLACE CHASSIS 6
3. MOUNT MLPE (OPTIONAL) 6
4. LAY BALLAST 7
5. ANCHOR SYSTEM (OPTIONAL) 7
6. INSTALL MODULES 8
7. COMPLETE BONDING 8
8. PV MODULE GROUNDING LUGS 9
STRING INVERTER MOUNTING KIT (OPTIONAL) 9
ELECTRICAL DIAGRAM 10
MODULE COMPATIBILITY 10

DISCLAIMER

This manual describes proper installation procedures and provides necessary standards required for product reliability. Warranty details are available at IronRidge.com. All installers must thoroughly read this manual and have a clear understanding of the installation procedures prior to installation. Failure to follow these guidelines may result in property damage, bodily injury or even death.

IT IS THE INSTALLER'S RESPONSIBILITY TO:

- Ensure safe installation of all electrical aspects of the array. All electrical installation and procedures should be conducted by a licensed and bonded electrician or solar contractor. Routine maintenance of a module or panel shall not involve breaking or disturbing the bonding path of the system. All work must comply with national, state and local installation procedures, product and safety standards.
- Comply with all applicable local or national building and fire codes, including any that may supersede this manual.
- Ensure all products are appropriate for the installation, environment, and array under the site's loading conditions.
- Use only IronRidge parts or parts recommended by IronRidge; substituting parts may void any applicable warranty.
- Review the Design Assistant to confirm design specifications.
- Ensure provided information is accurate. Issues resulting from inaccurate information are the installer's responsibility.
- Ensure bare copper grounding wire does not contact aluminum and zinc-plated steel components, to prevent risk of galvanic corrosion.
- If loose components or loose fasteners are found during periodic inspection, re-tighten immediately. If corrosion is found, replace affected components immediately.
- Provide an appropriate method of direct-to-earth grounding according to the latest edition of the National Electrical Code, including NEC 250: Grounding and Bonding, and NEC 690: Solar Photovoltaic Systems.
- Disconnect AC power before servicing or removing modules, AC modules, microinverters and power optimizers.
- Review module manufacturer's documentation for compatibility and compliance with warranty terms and conditions.

RATINGS

UL 2703 LISTED

#5014158

- Conforms to STD UL 2703 (2015) Standard for Safety First Edition: Mounting Systems, Mounting Devices, Clamping/ Retention Devices, and Ground Lugs for Use with Flat-Plate Photovoltaic Modules and Panels.
- Max Overcurrent Protective Device (OCPD) Rating: 25A
- Max Module Size: 24ft²
- Module Orientation: Landscape
- System Level Allowable Design Load Rating: 30 PSF downward, 20 PSF upward, 5 PSF lateral. Actual system structural capacity is defined by PE stamped project designs.

CLASS A SYSTEM FIRE RATING PER UL 2703

- Any System Tilt with Modules Types 1, 2 & 3 on Low Slope Roofs (< 9.5 degrees)
- Any module-to-roof gap is permitted with no perimeter guarding required. This rating is applicable with any IronRidge or 3rd party roof attachment and with or without concrete blocks in the Chassis.
- Class A rated PV systems can be installed on Class A, B, and C roofs without affecting the roof fire rating.

STRUCTURAL CERTIFICATION

- Designed and Certified for Compliance with the International Building Code & ASCE/SEI-7
- Wind Tunnel Testing by I.F.I.

MARKINGS

Product markings are located on the top surface of the BX Chassis.

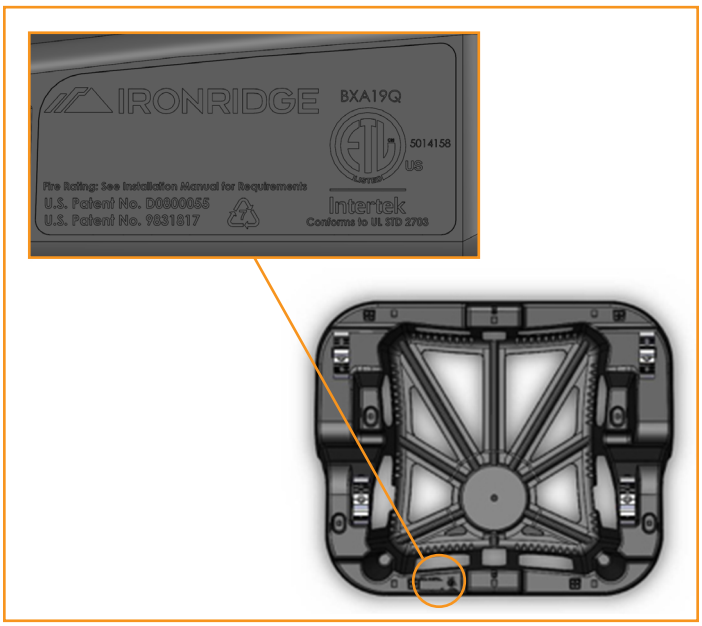

CHECKLIST

PRE-INSTALLATION

- ☐ Verify module compatibility. See Page 9 for info.

TOOLS REQUIRED

- ☐ Cordless Drill (optional)
- ☐ Torque Wrench (0-250 in-lbs)
- ☐ 9/16" Socket
- ☐ 7/16” Socket
- ☐ 1/2" Socket
- ☐ String Chalk Line

TORQUE VALUES

- ☐ Top Clamp Nuts (1/2” Socket): 120 in-lbs
- ☐ 5/16” MLPE Flange Bolts (1/2” Socket): 60 in-lbs
- ☐ 5/16” String Inverter Mount Bolts (1/2” Socket): 80 in-lbs
- ☐ 5/16” L-Foot to Chassis Nuts (1/2” Socket): 120 in-lbs
- ☐ 3/8” T-Bolt Bonding Hardware (7/16” Socket): 250 in-lbs
- ☐ 1/4” String Inverter Mount Hdw (7/16” Socket): 80 in-lbs
- ☐ #10-24 PV Grounding Lug Hdw (7/16” Socket): 60 in-lbs
- ☐ Flat Roof Attach to L-Foot Hdw (9/16” Socket): 250 in-lbs
- ☐ Grounding Lug Terminal Screws (7/16" Socket): 20 in-lbs

COMPONENTS

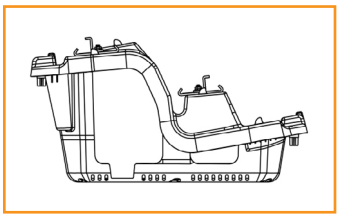

5° BX Chassis

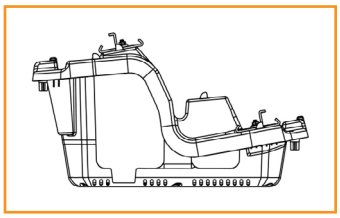

10° BX Chassis

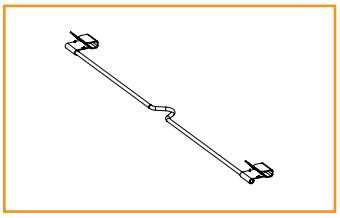

8" Module Bonding Jumper

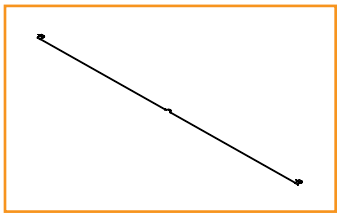

38" Row Bonding Jumper

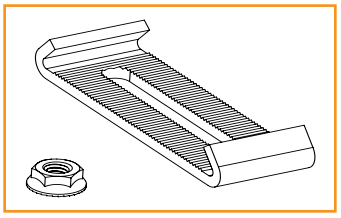

Bottom Clamp

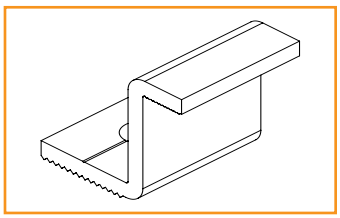

Top Clamp (Height Varies)

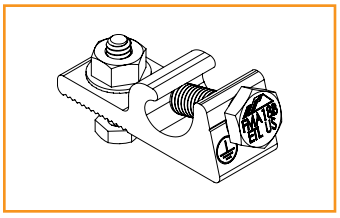

PV Module Grounding Lug

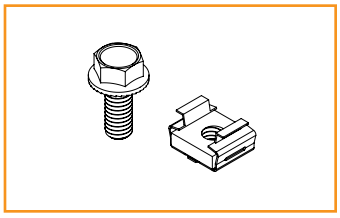

MLPE Mounting Hardware

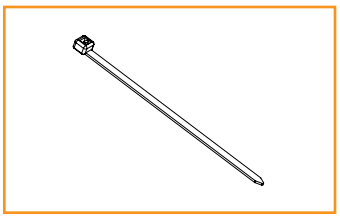

Cable Tie

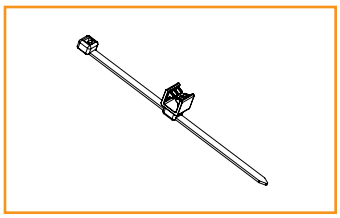

Edge Clip Cable Tie

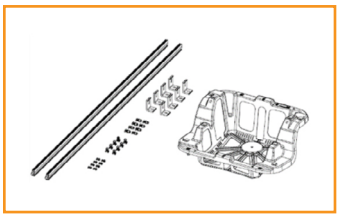

String Inverter Mounting Kit

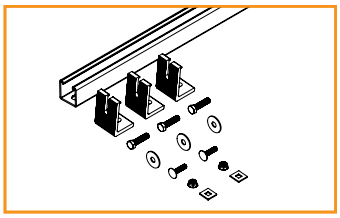

Flat Roof Attachment Kit

BX CHASSIS (5° & 10°)

BX Chassis is designed to clamp PV modules and secure them in place. Reference tabs are integrated to aid with aligning modules according to system layout. The Chassis is available in two SKUs: 5 and 10 degree tilt configurations. The Chassis is designed to accommodate 4 full size (16” x 8” x 4”) or 8 half-size concrete ballast blocks (16” x 8” x 2”) nominal dimensions.

Concrete ballast block must meet the following requirements:

- Manufactured per ASTM C 1491 (Standard specification for concrete pavers)
- Manufactured to resist freeze-thaw as required per local conditions
- Weight: 14-17 lbs +/- 2 lbs for half size and 28-34 lbs +/- 2 lbs for full size
- Compressive Strength requirement: 3000 PSI min

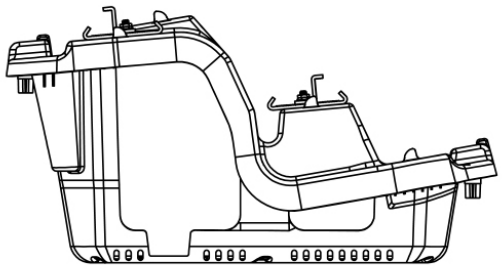

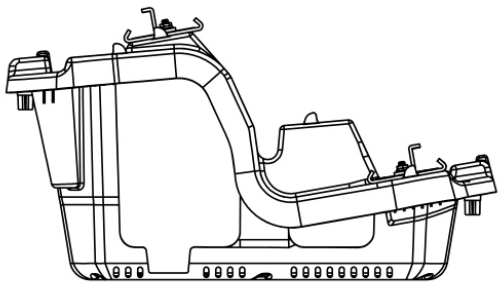

MODULE CLAMPING

Top Clamps are module frame height specific and accommodate most common module sizes: 30mm, 32mm, 33mm, 35mm, 38mm, 40mm, 46mm.

ARRAY GROUNDING

Only one PV Module Grounding Lug is required per continuous array, regardless of array size. Use the IronRidge PV Module Grounding Lug (PV-LUG-01-A1).

Alternately, the following grounding lugs have been tested or evaluated for use with the BX system:

- Ilsco GBL-4DBT
- Amphenol HGLUI
- Burndy CL501TN, BGBS4

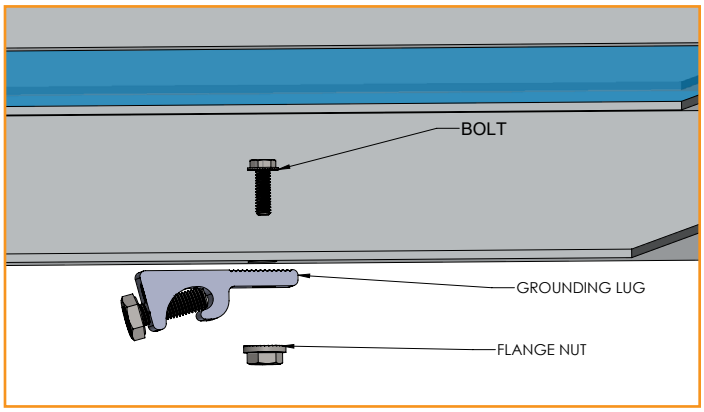

MLPE DEVICES (OPTIONAL)

The following third party MLPE module mounting brackets have been tested or evaluated for use with the BX system:

- EcoFasten Rock-It Clip 2.0
- Unirac MLPE Mount

Refer to respective manufacturer for specific installation instructions of MLPE module mounting brackets.

WIRE MANAGEMENT

Optional Edge Clips and wire ties can be used to aid with wire management.

INSTALLATION STEPS (QUICK GUIDE)

1. Mark out all fire setbacks on the roofing plane.

2. Measure and mark out footprint of array according to the approved planset location.

3. Starting at the south edge of the approved planset, chalk the South Array Edge, making sure that this line is at least 8" away from the South Fire Setback.

4. Measure Chassis spacing (refer to chart below) and chalk out 3 rows, 25' each.

5. Measure out the Chassis locations by marking along each row, module width plus 3/8".

6. Place Chassis on cross hairs. Align cross hairs with alignment marks on Chassis.

7. Install MLPE as needed.

8. Load Chassis with blocks as per the plan set.

9. Install fixed attachment points as required by the plan set for anchored hybrid systems, seal/flash in accordance with the roofing manufacturer's guidelines.

10. Module Installation

a. Place all Bottom Clamps on Chassis.
b. Land all panels on Chassis.
c. Place all Top Clamps and ensure proper alignment and engagement of the Bottom Clamp.
d. Make sure that all Clamps are fully engaged and square to the module and torqued appropriately.

11. Complete Array Bonding

a. Install 8" Module Bonding Jumpers between all modules along the rows.
b. Install 38" Row Bonding Jumpers between all rows.

12. Install PV Module Grounding Lug to ground each array.

It can be helpful on constrained arrays to chalk line every row, but it is not required.

The illustration below shows the order of chalk operations for marking out the starter array, as well as a corresponding Chassis spacing table which can be used to easily find the approx. Chassis spacing within 1/8". For more precise measurements use the formulas provided at the bottom of the table.

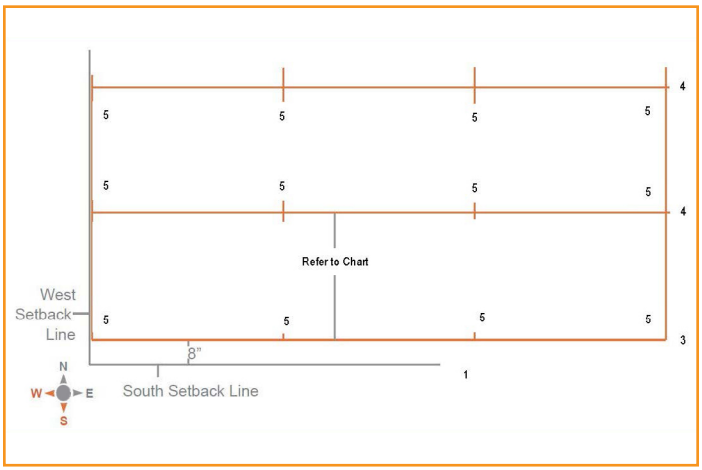

Module Width	5° Chassis Spacing	10° Chassis Spacing
38.5" - 39"	48.5"	51"
39" - 39.5"	49"	51.5"
39.5" - 40"	49.5"	52"
40" - 40.5"	50"	52.5"
40.5" - 41"	50.5"	53"
41" - 41.5"	51"	53.5"
41.5" - 42"	51.5"	54"
42" - 42.5"	52"	54.5"
42.5"+	52.5"	55"
Spacing Formulas:	**Width Cos(5°) + 10"**	**Width Cos(10°) + 13"**

1. MARK LAYOUT

Using the approved planset, mark out all fire setbacks and the array foot print on the roof(s).

Mark the South Array Edge with a 25' line (for example). If the southern edge of the array is against the South Fire Setback, mark the South Array Edge at least 8" away from the setback. This will ensure that no part of the Chassis is in the setback.

Measure Chassis spacing (refering to table on Page 5) and chalk out 3x 25' rows. Then measure out the Chassis locations by marking along each row (module width plus 3/8").

These layouts are useful for maintaining a straight line at the start of the array. Once started the rest of the system is build as you go.

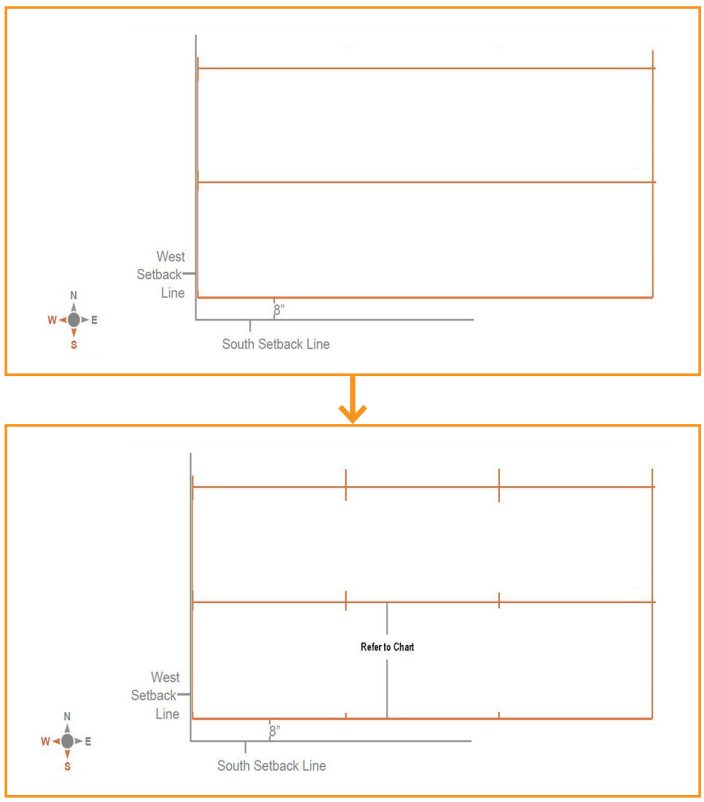

2. PLACE CHASSIS

Place first Chassis at Southwest corner of the array, aligning the center reference hole with the cross hair marker. Repeat for each additional Chassis in the array.

After the array has been installed, the Chassis at the East and West edges of the array should be moved inward from the perimeter reference lines so that they are fully underneath the modules.

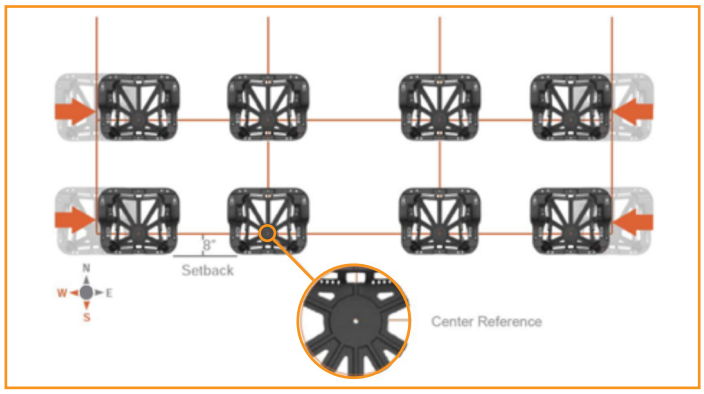

3. MOUNT MLPE (OPTIONAL)

Mount microinverters and power optimizers directly to the Chassis using the MLPE Mounting Hardware Kit. Alternatively, you can use a third party module mounting bracket (following manufacturer instructions).

To install the MLPE Mounting Hardware Kit, place the Cage Nut into either of the square cut-outs on the lower edge of a Chassis. Secure your MLPE device with a 5/16" Flange Bolt torqued to **60 in-lbs.**

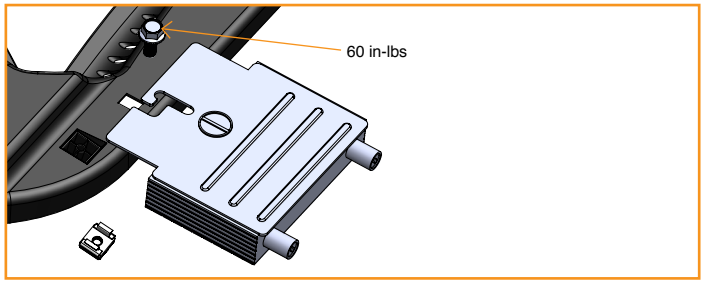

4. LAY BALLAST

Place ballast blocks in BX Chassis as indicated on site layout.

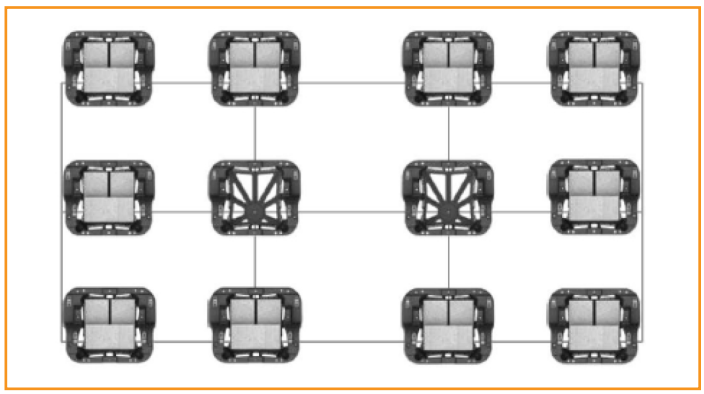

5. ANCHOR SYSTEM (OPTIONAL)

A. SECURE L-FEET

The Attachment Kit uses an 8' minimum Galvanized Strut Channel with slotted holes to span across two Chassis and a Flat Roof Attachment(FRA) Anchor in order to anchor the Chassis to the roof. Secure L-Feet onto the Chassis by installing the Carriage Bolt and Square Washer from the underside of each Chassis through the reference hole. Torque Flange Nut to **120 in-lbs**.

- **Refer to Flat Roof Attachment installation instructions for details, where applicable.**
- **Flat Roof Attachment Kit is not part of the grounding path.**

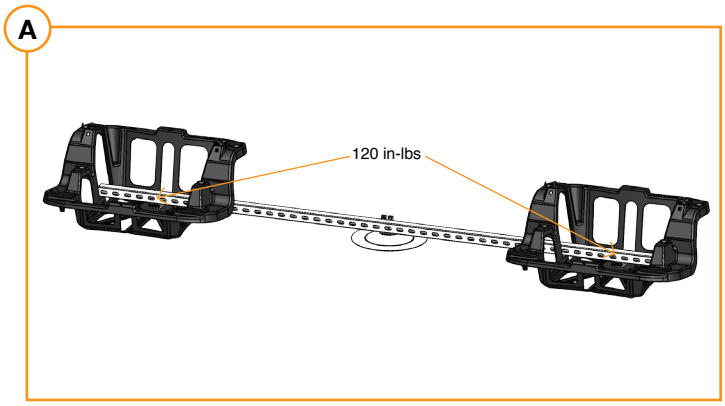

B. ATTACH STRUT CHANNEL

Secure, at minimum, an 8' x 1-5/8" Galvanized Strut Channel with slotted holes, through the two Chassis onto the L-Feet using the provided 3/8" Bolt with 1-1/4" washer to a Channel Nut (not provided). Torque Nut to **250 in-lbs**.

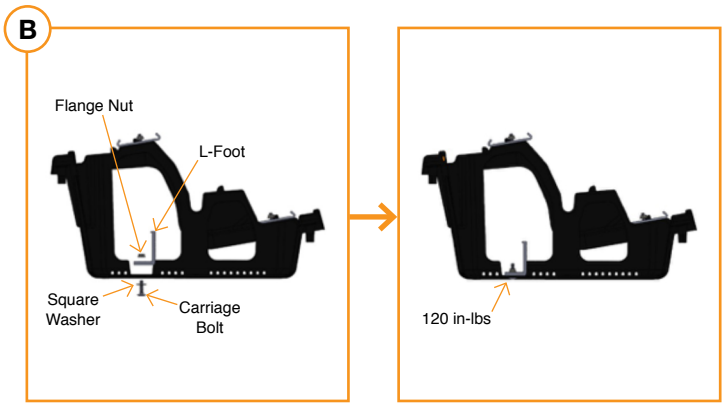

C. FINISH ANCHORS

Assemble an L-Foot onto the FRA Anchor and flashing membrane (where applicable) using the 3/8" Bolt and Flat Washer torqued to **250 in-lbs**. Then, install L-Foot and Flat Roof Attachment assembly at the Strut Channel midpoint using the provided 3/8" Bolt with a 1-1/4" Washer to a Channel Nut (as before) torqued to **250 in-lbs**.

- **After anchor assembly is installed seal/flash per roofing manufacturer's guidelines.**
- **Anchors shall not be located on a perimeter south row.**
- **The following 3rd party roof attachment has been tested or evaluated for use with BX:**
  - **Anchor Products U-Anchors**

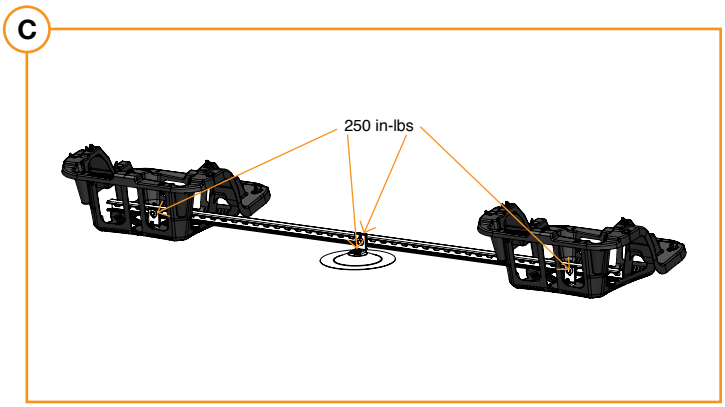

6. INSTALL MODULES

A. PLACE CLAMPS

Place Bottom Clamp over the Chassis' corner bolt, then pull clamp towards the outer edge.

The north end of the North Row and south end of the South Row do not need bottom clamps.

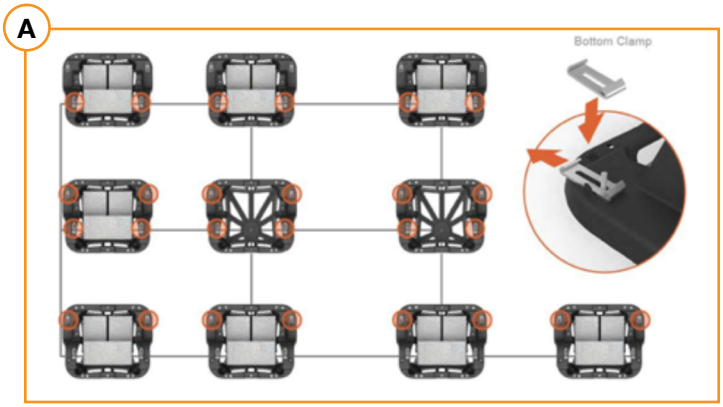

B. LAY MODULES

Starting in the South-West corner and working east, lay modules in a row onto edge of Bottom Clamps. Double-check panel spacing along each row.

You can use reference tabs located in the middle of the Chassis to properly space modules.

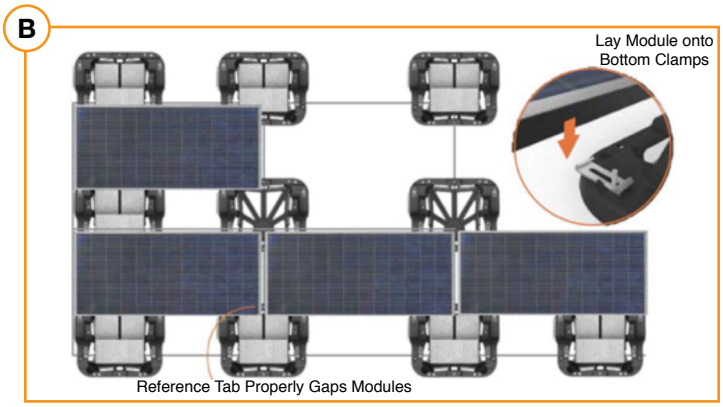

C. SECURE MODULES

To secure a module, first pull the Bottom Clamp until it is snug against the inner flange of the module. Then place the Top Clamp and Flange Nut over the bolt and torque to 120 in-lbs.

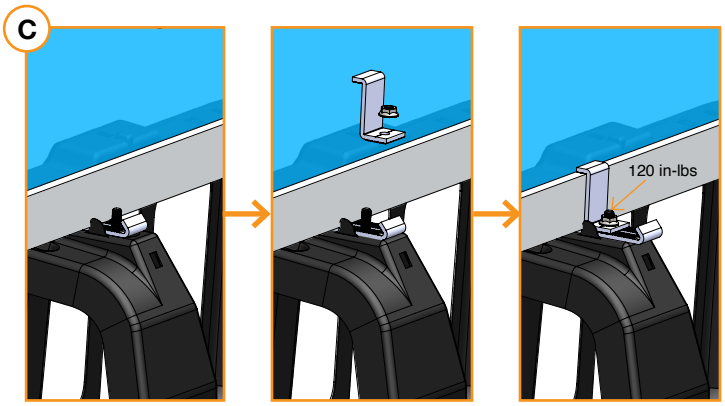

7. COMPLETE BONDING

A. MODULE-TO-MODULE BONDING

The 8” Bonding Jumper is an electrial bonding jumper that can be used for module to module bonding.

New jumpers should be used if re-installation of jumper is required.
Jumpers are installed on the bottom flange of modules.
Supports flange thicknesses 1.2mm to 3.1mm.

7. COMPLETE BONDING (CONTINUED)

B. ROW-TO-ROW BONDING

The 38" Bonding Jumper is an electrial bonding jumper that should be used for row to row bonding by securing Clips to inner flanges on long side of a module from each row, as shown. Tapping Clips into place may be required for modules with thicker flanges.

The bonding does not need to take place on the same side of the array, so long as every row is bonded to the next row.

B

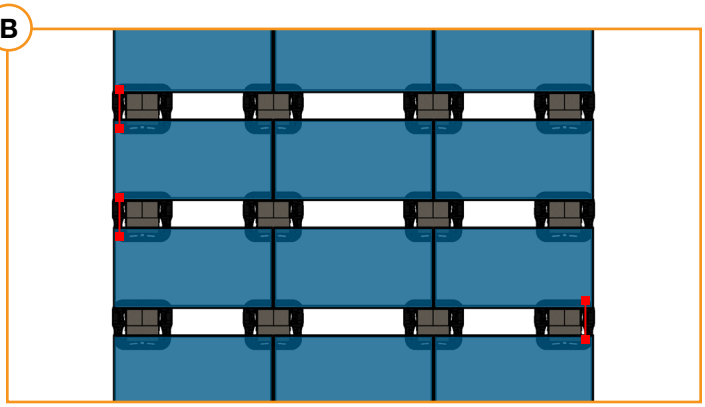

8. PV MODULE GROUNDING LUGS

Ground each continuous array by securing a PV Module Grounding Lug to any module in the array.

Only one PV Module Grounding Lug is required per continuous array, regardless of array size. Reference module manufacturer's installation instructions for grounding location.

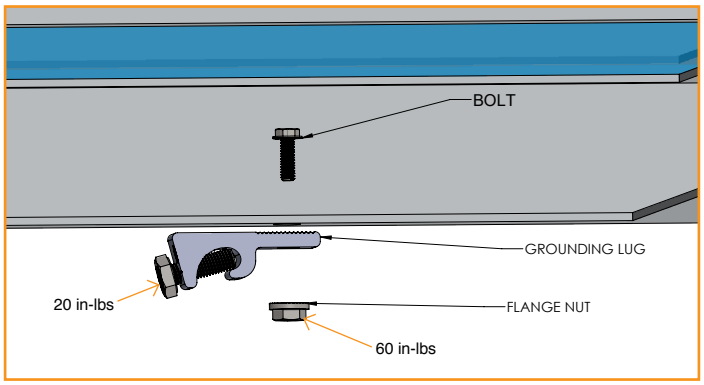

STRING INVERTER MOUNTING KIT (OPTIONAL)

The String Inverter Mounting Kit creates a mounting platform for inverters on top of the BX Chassis.

A. CROSS RAILS

Cut provided rails to length, as needed. Install four Cage Nuts in the square holes on the edges of the Chassis. Then, install an L-Foot into each Cage Nut location using a 5/16" bolt tightened to **80 in-lbs**. Attach rails to L-Feet using 3/8" T-bolt bonding hardware tightened to **250 in-lbs**.

A

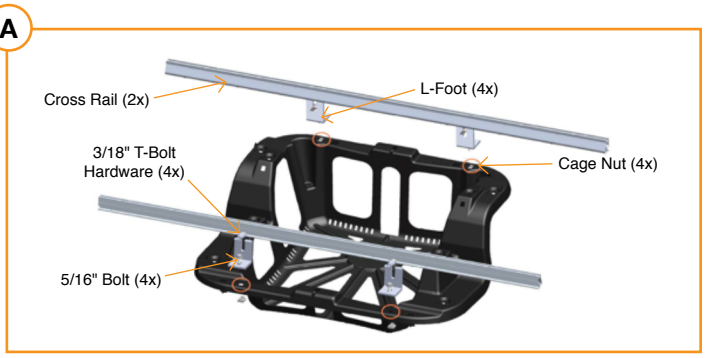

B. TOP RAILS

Assemble the top rails using four L-Feet on top of cross rails. Install four L-Feet on top of the cross rails using ¼" T-bolt and nut tightened to 80 in-lbs. Attach top rails to L-Feet using 3/8" T-bolt Bonding Hardware tightened to **250 in-lbs**. Space top rails according to the mounting requirements for the inverter being used.

B

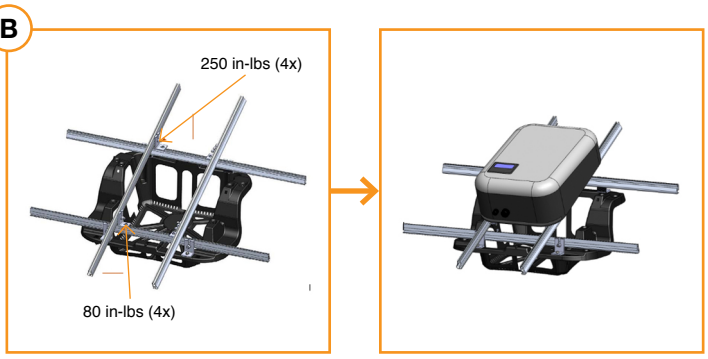

ELECTRICAL DIAGRAM

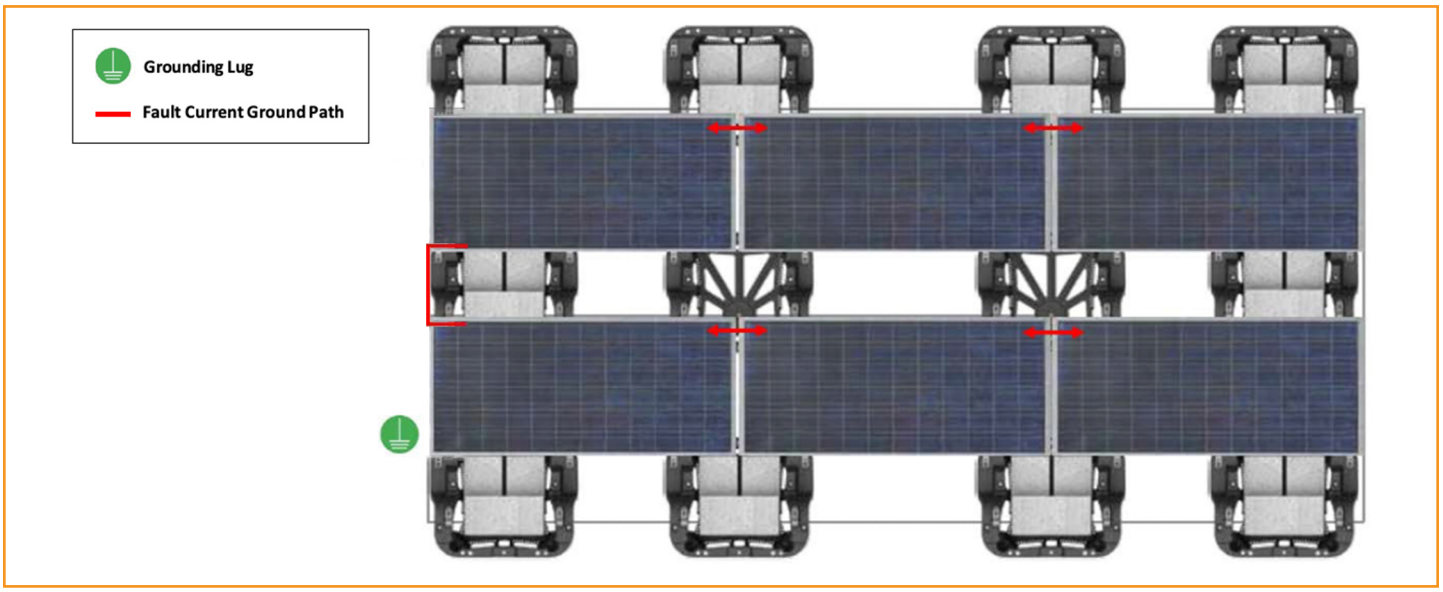

MODULE COMPATIBILITY

The BX System may be used to ground and/or mount a PV module complying with UL 2703 only when the specific module has been evaluated for grounding and/or mounting in compliance with the included instructions. Unless otherwise noted, “xxx” refers to the module power rating and both black and silver frames are included in the certification.

MAKE	MODELS
Amerisolar	Amerisolar modules with 35 and 40 mm frames AS-bYxxxZ Where "b" can be 5 or 6; "Y" can be M, P, M27, P27, M30, or P30; "xxx" is the module power rating; and "Z" can be blank, W or WB
Aptos	Aptos modules with 35 and 40 mm frames DNA-yy-zz23-xxx where "yy" can be 120 or 144; "zz" can be MF or BF; and ""xxx" is the module power rating
Astronergy Solar	Astronergy modules with 30, 35, 40, and 45 mm frames aaSMbbyyC/zz-xxx Where “aa” can be CH or A; "bb" can be 60, 66, or 72; “yy” can be blank, 10 or 12; "C" can M, P, M(BL), M-HC, M(BL)-HC, P-HC, M(DG), or M(DGT); “zz” can be blank, HV, F-B, or F-BH ; and “xxx” is the module power rating
ASUN	ASUN modules with 35 and 40 mm frames ASUN-xxx-YYZZ-aa Where "xxx" is the module power rating;" YY" can be 60 or 72; "ZZ" can be M,or MH5; and "aa" can be blank or BB
Auxin	Auxin modules with 40 mm frames AXN6y6zAxxx Where "y" can be M or P; "z" can be 08, 09, 10, 11, or 12; "A" can be F or T; and "xxx" is the module power rating
Axitec	Axitec Modules with 35 and 40 mm frames AC-xxxY/aaZZ Where "xxx" is the module power rating; "Y" can be M, P or MH; "aa" can be blank, 125- or 156-; and "ZZ" can be 54S, 60S, 72S, 120SB, or 144S
Boviet	Boviet modules with 35 and 40mm frames BVM66aaYY-xxxBB Where "aa" can be 9, 10 or 12; "YY" is M or P; "xxx" is the module power rating; and "BB" can be blank or L
BYD	BYD modules with 35 mm frames BYDxxxAY-ZZ Where "xxx" is the module power rating; "A" can be M6, P6, MH or PH; "Y" can be C or K; and "ZZ" can be 30 or 36
Canadian Solar	Canadian Solar modules with 30, 35 and 40 mm frames CSbY-xxxZ Where "b" can be 1, 3 or 6; "Y" can be H, K, P, U, V, W, or X; "xxx" refers to the module power rating; and "Z" can be M, P, MS, PX , M-SD, P-AG, P-SD, MB-AG, PB-AG, MS-AG, or MS-SD
CertainTeed	CertainTeed modules with 35 and 40 frames CTxxxYZZ-AA Where "xxx" is the module power rating; "Y" can be M, P or HC; "ZZ" can be 00,01, 10, or 11; and "AA" can be 01, 02, 03 or 04
CSUN	Csun modules with 35 and 40 mm frames YYxxx-zzAbb Where "YY" is CSUN or SST; xxx is the module power rating; "zz" is blank, 60, or 72; and "A" is blank, P or M; "bb" is blank, BB, BW, or ROOF

ET Solar	ET Solar modules with 35 and 40 mm frames ET-Y6ZZxxxAA Where “Y” can be P, L, or M; “ZZ” can be 60 or 72; “xxx” refers to the module power rating; and “AA” can be WB, WW, BB, WBG, WWG, WBAC, WBCO, WWCO, WWBCO or BBAC
Flex	Flex modules with 35 and 40 mm frames and model identifier FXS-xxxYY-ZZ; where "xxx" is the module power rating; "YY" can be BB or BC; and "ZZ" can be MAA1B, MAA1W, MAB1W, SAA1B, SAA1W, SAC1B, SAC1W, SAD1W, SBA1B, SBA1W, SBC1B, or SBC1W
GCL	GCL modules with 35 mm and 40 mm frames GCL-ab/YY xxx Where "a" can be M or P; "b" can be 3 or 6; "YY" can be 60, 72, 72H, or 72DH; and xxx is the module power rating
GigaWatt Solar	Gigawatt modules with 40 mm frames GWxxxYY Where “xxx” refers to the module power rating; and “YY” can be either PB or MB
Hansol	Hansol modules with 35 and 40 frames HSxxxYY-zz Where "xxx" is the module power rating; "YY" can be PB, PD, PE, TB, TD, UB, UD, or UE; and "zz" can be AH2, AN1, AN3, AN4, HV1, or JH2
Hanwha Solar	Hanwha Solar modules with 40 and 45 mm frames HSLaaP6-YY-1-xxxZ Where "aa" can be either 60 or 72; "YY" can be PA or PB; "xxx" refers to the module power rating; and "Z" can be blank or B
Hanwha Q CELLS	Hanwha Q CELLS Modules with 32, 35, 40, and 42mm frames and model identifier aaYY-ZZ-xxx where "aa" can be Q. or B.; "YY" can be PLUS, PRO, PEAK, LINE PRO, LINE PLUS, PLUS DUO, or PEAK DUO; and "ZZ" can be G3, G3.1, G4, G4.1, L-G2, L-G2.3, L-G3, L-G3.1, L-G3y, L-G4, L-G4.2, L-G4y, LG4.2/TAA, BFR-G3, BLK-G3, BFR-G3.1, BLK-G3.1, BFR-G4, BFR-G4.1, BFR G4.3, BLK-G4.1, G4/SC, G4.1/SC, G4.1/TAA, G4.1/MAX, BFR G4.1/TAA, BFR G4.1/MAX, BLK G4.1/TAA, BLK G4.1/SC, EC-G4.4, G5, BLK-G5, L-G5, L-G5.1, L-G5.2, L-G5.2/H, L-G5.3, G6, G6+, BLK-G6, L-G6, L-G6.1, L-G6.2, L-G6.3, G7, BLK-G6+, BLK-G7, G7.2, G8, BLK-G8, G8+, BLK-G8+ L-G7, L-G7.1, L-G7.2, L-G7.3, L-G8, L-G8.1, L-G8.2, or L-G8.3; and "xxx" is the module power rating
Heliene	Heliene modules with 40 mm frames YYZZxxxA where "YY" can be 36, 60, 72, or 96; "ZZ" can be M, P, or MBLK; "xxx" is the module power rating; and "A" can be blank, HomePV, or Bifacial
Hyundai	Hyundai modules with 33, 35, 40 and 50 mm frames HiY-SxxxZZ Where "Y" can be A, D, M or S; "xxx" refers to the module power rating; and "ZZ" can be HG, HI, KI, MI, MF, MG, RI, RG, RG(BF), RG(BK), SG, TI, or TG
Itek	Itek Modules with 40 mm frames IT-xxx-YY Where "xxx" is the module power rating; and "YY" can be blank, HE, or SE, or SE72
JA Solar	JA Solar modules with 30, 35, 40 and 45 mm frames JAyyzz-bbww-xxx/aa Where “yy” can be M, P, M6 or P6; “zz” can be blank, (K), (L), (R), (V), (BK), (FA), (TG), (FA)(R), (L)(BK), (L)(TG), (R)(BK), (R)(TG), (V)(BK), (BK)(TG), or (L)(BK)(TG); “bb” can be 48, 60, or 72; "ww" can be D09, S01, S02, S03, S06, S09, or S10; “xxx” is the module power rating; and “aa” can be BP, MP, SI, SC, PR, 3BB, 4BB, 4BB/RE, 5BB
Jinko	Jinko modules with 35 and 40 mm frames JKMYxxxZZ-aa Where "Y" can either be blank or S; "xxx" is the module power rating; "ZZ" can be P, PP, M; and "aa" can be blank, 60, 60B, 60H, 60L, 60BL, 60HL, 60HBL, 60-J4, 60B-J4, 60B-EP, 60(Plus), 60-V, 60-MX, 72, 72-V, 72H-V, 72L-V, 72HL-V or 72-MX
Kyocera	Kyocera Modules with 46mm frames KYxxxZZ-AA Where "Y" can be D or U; "xxx" is the module power rating; "ZZ" can be blank, GX, or SX; and "AA" can be LPU, LFU, UPU, LPS, LPB, LFB, LFBS, LFB2, LPB2, 3AC, 3BC, 3FC, 4AC, 4BC, 4FC, 4UC, 5AC, 5BC, 5FC, 5UC, 6BC, 6FC, 8BC, 6MCA, or 6MPA
LG	LG modules with 35, 40 and 46 mm frames LGxxxYaZ-bb Where "xxx" is the module power rating; "Y" can be A, E, N, Q, S; "a" can be 1 or 2; "Z" can be C, K, T, or W; and "bb" can be A3, A5, B3, G3, G4, J5, K4, or V5
Longi	Longi modules with 30, 35 and 40 mm frames LRa-YYZZ-xxxM Where "a" can be 4 or 6; "YY" can be blank, 60 or 72; "ZZ" can be blank, BK, BP, HV, PB, PE, PH, HBD, HPB, or HPH; "xxx" is the module power rating
Mission Solar	Mission Solar modules with 33 and 40 mm frames MSEbbxxxZZaa Where "bb" can be blank or 60A; "xxx" is the module power rating; "ZZ" can be blank, MM, SE, SO, SQ , SR, or TS; and "aa" can be blank, 1J, 4J, 4S, 5K, 5T, 60, 6J, 6S, 6W, 8K, 8T, or 9S
Mitsubishi	Mitsubishi modules with 46 mm frames PV-MYYxxxZZ Where "YY" can be LE or JE; xxx is the module power rating; and "ZZ" can be either HD, HD2, or FB

Motech	IM and XS series modules with 40 and 45 mm frames
Neo Solar Power	Neo Solar Power modules with 35 mm frames D6YxxxZZaa Where "Y" can be M or P; xxx is the module power rating; "ZZ" can be B3A, B4A, E3A, E4A, H3A, H4A; and "aa" can be blank, (TF), ME or ME (TF)
Panasonic	Panasonic modules with 35 and 40 mm frames VBHNxxxYYzzA Where "xxx" refers to the module power rating; "YY" can be either KA, RA, SA or ZA; "zz" can be either 01, 02, 03, 04, 06, 06B, 11, 11B, 15, 15B, 16, 16B, 17, or 18; and "A" can be blank, E, G, or N
Peimar	Peimar modules with 40 mm frames SbxxxYzz Where "b" can be G or P; “xxx” is the module power rating; “Y” can be M or P; and “zz” can be blank, (BF), or (FB)
Phono Solar	Phono Solar modules with 35, 40, and 45 mm frames PSxxxY-ZZ/A Where xxx refers to the module power rating; "Y" can be M, M1, MH, or M1H, or P; "ZZ" can be 20 or 24; and "A" can be F, T, U, or TH
REC Solar	REC modules with 30 and 38 mm frames RECxxxYYZZ Where “xxx” is the module power rating; “YY” can be AA, M, NP, PE, PE72, TP, TP2, TP2M, TP2SM, or TP2S; and “ZZ” can be blank, Black, BLK, BLK2, SLV, or 72
Renesola	ReneSola modules with 35, 40 and 50 mm frames AAxxxY-ZZ Where "AA" can be SPM(SLP) or JC; "xxx" refers to the module power rating; "Y" can be blank, F, M or S; and "ZZ" can be blank, Ab, Ab-b, Abh, Abh-b, Abv, Abv-b, Bb, Bb-b, Bbh, Bbh-b, Bbv, Bbv-b, Db, Db-b, or 24/Bb
Renogy	Renogy Modules with 40 mm frames RNG-xxxY Where "xxx" is the module power rating; and "Y" can be D or P
Risen	Risen Modules with 35 and 40 mm frames RSMyy-6-xxxZZ Where "yy" can be 60, 72, 120, or 144; "xxx" is the module power rating; and "ZZ" can be M or P
S-Energy	S-Energy modules with 40 frames SNxxxY-ZZ Where "xxx" is the module power rating; "Y" can be M or P; and "ZZ" can be 10, or 15
Seraphim Energy Group	Seraphim modules with 35 and 40 mm frames SEG-aYY-xxxZZ where "a" can be blank, 6 or B; "YY" can be blank, MA, MB, PA, or PB; "xxx" is the module power rating; and "ZZ" can be blank, BB, BG, BW, HV, WB, WW, BMB, BMB-HV
Seraphim USA	Seraphim modules with 40 mm frames SRP-xxx-6YY Where "xxx" is the module power rating; and "YY" can be MA, MB, PA, PB, QA-XX-XX, and QB-XX-XX
Sharp	Sharp modules with 35 and 40 mm frames NUYYxxx Where “YY” can be SA or SC; and "xxx" is the module power rating
Silfab	Silfab Modules with 38 mm frames SYY-Z-xxxAb Where “YY” can be IL, SA, LA, SG or LG; “Z” can be blank, M, P, or X; “A” can be blank, B, H, M, or N; and “b” can be A, L, G, or T
Solaria	Solaria modules with 40 mm frames PowerXT xxxY-ZZ Where "xxx" is the module power rating; "Y" can be R or C; and "ZZ" can be AC, BD, BX, BY, PD, PX, PZ, WX or WZ
Solarcity (Tesla)	Solarcity modules with 40 mm frames SCxxxYY Where "xxx" is the module power rating; and "YY" can be blank, B1 or B2
SolarWorld AG / Industries GmbH	SolarWorld Sunmodule Plus, Protect, Bisun, XL, Bisun XL, may be followed by mono, poly, duo, black, bk, or clear; modules with 46 mm frames SW-xxx Where "xxx" is the module power rating
SolarWorld Americas Inc.	SolarWorld Sunmodule Plus, Protect, Bisun, XL, Bisun XL, may be followed by mono, poly, duo, black, bk, or clear; modules with 33 mm frames SWA-xxx
SunEdison	SunEdison Modules with 35 and 40 mm frames SE-YxxxZABCDE Where "Y" can be B, F, H, P, R, or Z; "xxx" refers to the module power rating; "Z" can be 0 or 4; "A" can be B,C,D,E,H,I,J,K,L,M, or N ; "B" can be B or W; "C" can be A or C; "D" can be 3, 7, 8, or 9; and "E" can be 0, 1 or 2

Suniva	Suniva modules with 35, 38, 40 and 46 mm frames OPTxxx-AA-B-YYY-Z MVXxxx-AA-B-YYY-Z Where "xxx" is the module power rating; "AA" is either 60 or 72; "B" is either 4 or 5; "YYY" is either 100,101,700,1B0, or 1B1; and "Z" is blank or B
Sunpower	Sunpower standard (G3 or G4) or InvisiMount (G5) 40 and 46 mm frames SPR-Zb-xxx-YY Where "Z" is either A, E, P or X; “b” can be blank, 17, 18, 19, 20, 21, or 22; “xxx” is the module power rating and “YY” can be blank, BLK, COM, C-AC, D-AC, E-AC, G-AC, BLK-C-AC, or BLK-D-AC
Sunspark	Sunspark modules with 40 mm frames SYY-xxxZ Where “YY” can be MX or ST; “xxx” is the module power rating; and “Z” can be M, P or W
Suntech	Vd, Vem, Wdb, Wde, and Wd series modules with 35 and 40 mm frames
Talesun	Talesun modules with 35 and 40 frames TP6yZZaaxxx-b Where “yy” can be blank, F or H; “ZZ” can be 60 or 72; “aa” can be M or P; and “b” can be blank, B, T, or (H)
Trina	Trina Modules with 30, 35, 40 and 46mm frames TSM-xxxYYZZ Where "xxx" is the module power rating; "YY" can be DD05, DD06, DD14, DE14, DE15, DEG15, PA05, PC05, PD05, PD06, PA14, PC14, PD14, PE14, or PE15 ; and "ZZ" can be blank, .05, .08, .10, .18, .08D, .18D, 0.82, .002, .00S, 05S, 08S, A, A.05, A.08, A.10, A.18, A(II), A.05(II), A.08(II), A.082(II), A.10(II), A.18(II), H, H(II), H.05(II), H.08(II), HC.20(II), HC.20(II), or M
Vikram	Vikram solar modules with 40 mm frames Syy.ZZ.AAA.bb Where "yy" can be M, P, MBB, MH, MS, MHBB, or PBB; "ZZ" can be 60 or 72; "AAA" is the module power rating; and "bb" can be 03.04 or 05
VSUN	VSUN modules with 35 and 40 mm frames VSUNxxx-YYz-aa Where "xxx" is the module power rating; "YY" can be 60, 72, 120 or 144; "z" can be M, P, MH, PH, or BMH; and "aa" can be blank, BB, or DG
Winaico	Winaico modules with 35 and 40 mm frames Wsy-xxxZa Where "y" can be either P or T; "xxx" is the module power rating; "Z" can be either M, P, or MX; and "a" can be blank or 6
Yingli	Panda, YGE, YGE-U, and YLM series modules with 35, 40, and 50 mm frames