FX SYSTEM

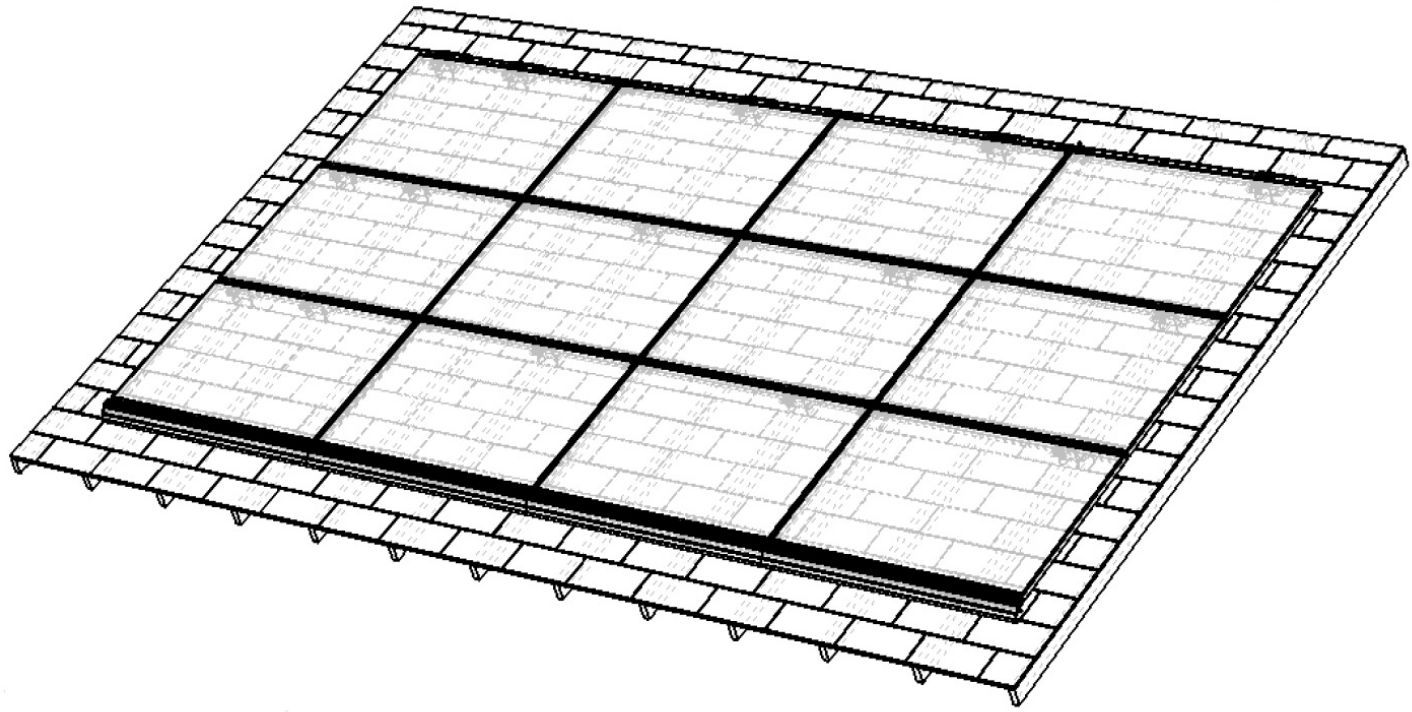

INSTALLATION MANUAL

IRONRIDGE

CONTENTS

DISCLAIMER 1
RATINGS 2
MARKINGS 2
CHECKLIST 2
FX SYSTEM COMPONENTS 3
DESIGN GUIDELINES 6
INSTALLATION 10
1. LAY OUT ARRAY 10
2. INSTALL FLASH FX 10
3. INSTALL FIRST ROW OF MOUNT FX 11
4. INSTALL TRIM AND BRIDGE FX 12
5. INSTALL MODULES 15
6. INSTALL LUG FX 16
7. WIRE MANAGEMENT 18
ARRAY MAINTENANCE 19
1. ACCESS FROM NORTH EDGE (MODULE REPLACEMENT) 19
2. ACCESS FROM SOUTH EDGE (MODULE REPLACEMENT) 19
MODULE COMPATIBILITY LIST 20
THIRD PARTY COMPONENTS 20

DISCLAIMER

This manual describes the proper installation procedures and provides minimum standards required for product reliability. Warranty details are available on website. Thoroughly understanding this manual is imperative to proper installation; failure to follow the guidelines set forth can result in property damage, bodily injury, or even death.

IT IS THE INSTALLER'S RESPONSIBILITY TO:

- Ensure that the installation is completed by a licensed solar professional. All electrical installations and procedures
- should be conducted by a licensed and bonded electrician or solar contractor. Routine maintenance of a module or
- panel shall not involve breaking or disturbing the bonding path of the system.
- Comply with all applicable local or national building codes, including any that may supersede this manual.
- Ensure all products are appropriate for the installation, environment, and array under the site's loading conditions.
- Use only IronRidge parts or parts recommended by IronRidge; substituting parts may void any applicable warranty.
- Refer to Ironridge's Structural Certification letters for state specific design conditions including allowable spans,
- cantilever, and bridge location requirements.
- Comply with roofing manufacturer's warranty terms including: using protective barriers between mounting and
- roofing and roof penetrations and removing all loose debris or gravel prior to installation that may potentially obstruct
- installation procedures.
- Comply with all applicable fire codes including, but not limited to, keeping walkways clear and avoiding obstacles.
- Ensure provided information is accurate. Issues resulting from inaccurate information are the installers' responsibility.
- Ensure bare copper grounding wire does not contact aluminum and zinc-plated steel components to prevent risk of
- galvanic corrosion.
- If loose components or loose fasteners are found during periodic inspection, re-tighten immediately. If corrosion is
- found, replace affected components immediately.
- Provide an appropriate method of direct-to-earth grounding according to the latest edition of the National Electrical
- Code, including NEC 250: Grounding and Bonding, and NEC 690: Solar Photovoltaic Systems.
- Disconnect AC power before servicing or removing microinverters and power optimizers.
- Review module manufacturer's documentation to ensure compatibility and compliance with warranty terms and
- conditions.
- Trim FX shall not be used as scaffolding, a roof jack, or any form of an anchoring point for roof personnel, tools, components, or materials.

RATINGS

UL 2703 LISTED

#5003807

- Conforms to STD UL 2703 (2015) Standard for Safety First Edition: Mounting Systems, Mounting Devices, Clamping/ Retention Devices, and Ground Lugs for Use with Flat-Plate Photovoltaic Modules and Panels.
- Max Overcurrent Protective Device (OCPD) Rating: 25A
- Max Module Size: 20ft²
- Module Orientation: Portrait or Landscape
- Allowable Design Load Rating: 30 PSF downward, 20 PSF upward, 10 PSF lateral. Actual system structural capacity is defined by PE stamped certification letters

CLASS A SYSTEM FIRE RATING PER UL 1703

- Steep Slope Roofs (≥ 9.5°) with Module Types 1 and 2
- Any module-to-roof gap is permitted, with no perimeter guarding required (Trim FX optional)
- Class A rated PV systems can be installed Class A, B, and C roofs without affecting the roof fire rating

WATER SEAL RATINGS: UL 441 & TAS 100(A)-95 (FLASH FX / FLAT TILE FX / S-TILE FX)

- Tested and evaluated without sealant.
- Any roofing manufacturer approved sealant is allowed. Ratings applicable for roof slopes between 2:12 and 12:12

STRUCTURAL CERTIFICATION

- Designed and Certified for Compliance with the International Building Code & ASCE/SEI-7

MARKINGS

Product markings are located at the bottom right corner of Flash FX or Lug FX bolt head.

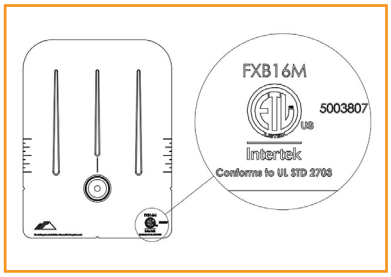

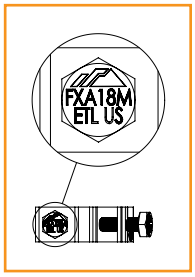

CHECKLIST

TOOLS REQUIRED

- Cordless Drill (Non-Impact)
- Impact Driver (For Hanger Bolts Only)
- Torque Wrench (0-240 in-lbs)
- 7/16” Socket
- 1/4” Drill Bit

TORQUE VALUES

- Flashing Lag Bolts (5/16"-9): Fully seat
- Hanger Nut: 132 in-lbs (11 ft-lbs)
- Lug FX (Mounting Bolt): 60 in-lbs (5 ft-lbs)
- Lug FX (Terminal Screw): 20 in-lbs

FX SYSTEM COMPONENTS

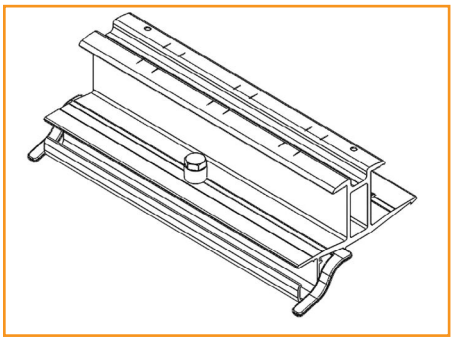

Bridge FX

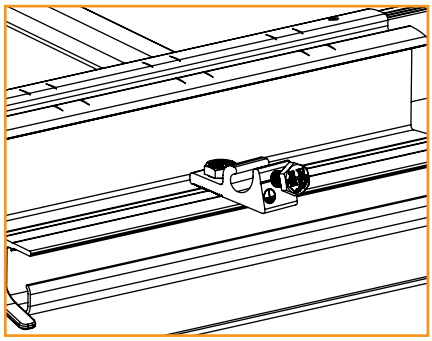

Lug FX

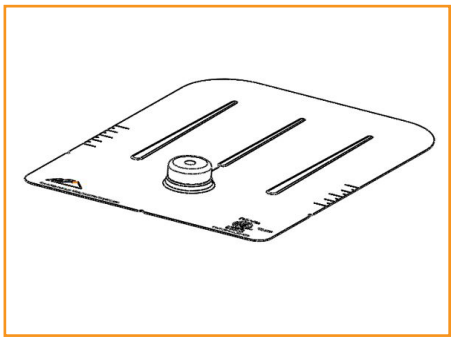

Flash FX

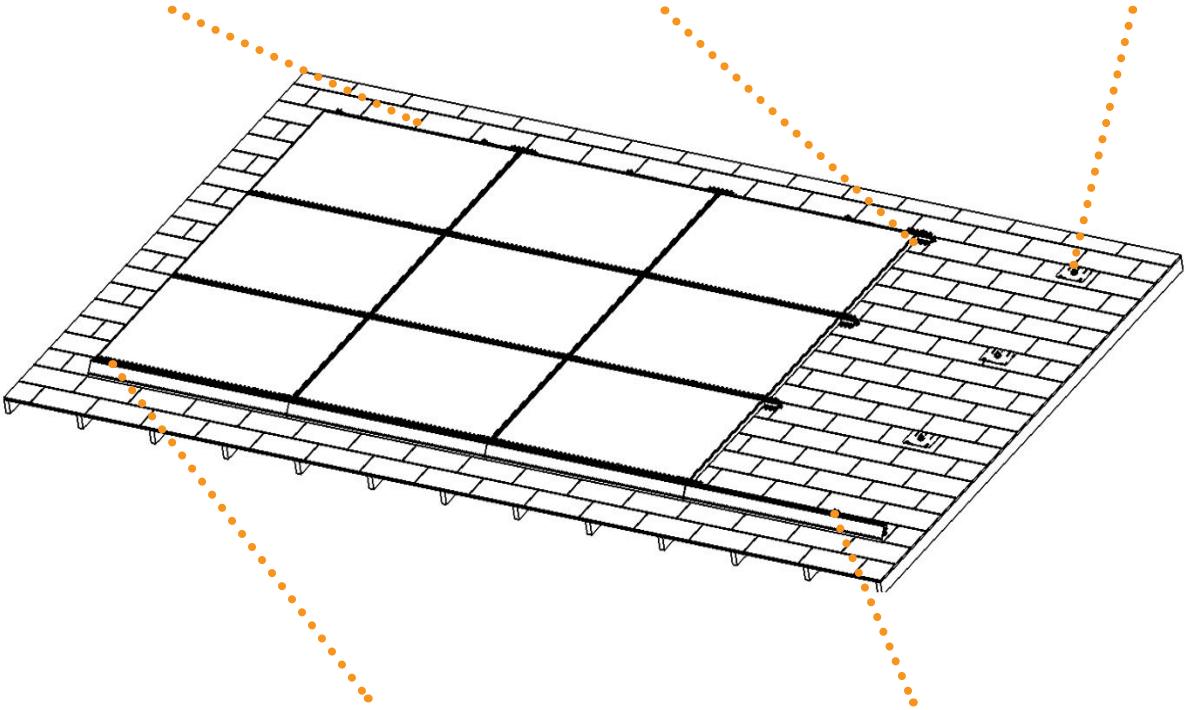

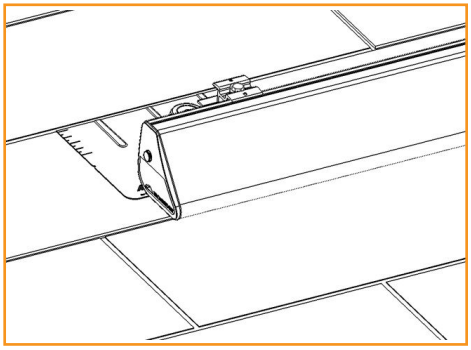

Trim FX & End Cap

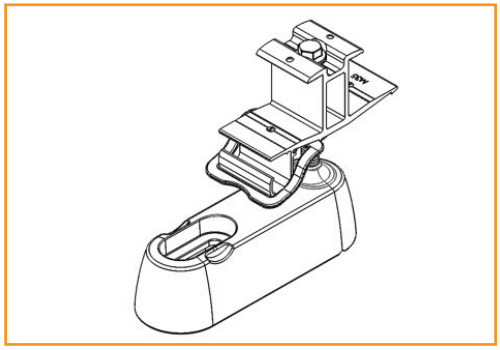

Mount FX

MOUNT FX

Mount FX is uniquely designed to securely grip PV modules and secure them in place. The base of the Mount FX assembly allows for 360 degree articulation. This provides North-South flexibility and also helps to avoid conflict with the Bridge FX. A built-in wire management trough and integrated bonding features allow for a fully-bonded solution and seamless, rapid installation. For the first row of an array, Mount FX is always oriented with the wire management trough positioned towards the north end of an array.

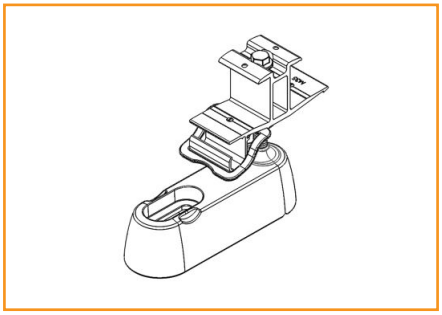

Mount FX

FLASH FX

Flash FX provides for a secure connection between Mount FX and composition shingle roofs while maintaining a water-tight seal at 7/8” above the roof deck.

1. Hanger Bolt
2. EPDM/ Stainless Steel Sealing Washer

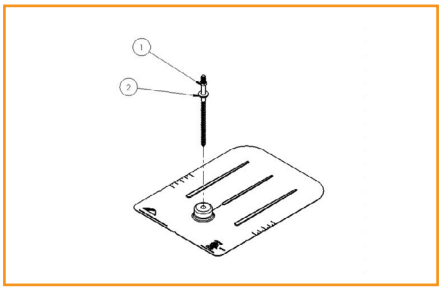

Flash FX

FLAT & S TILE FX

Flat and S Tile FX provide a secure connection between Mount FX and flat or s-tile roofs.

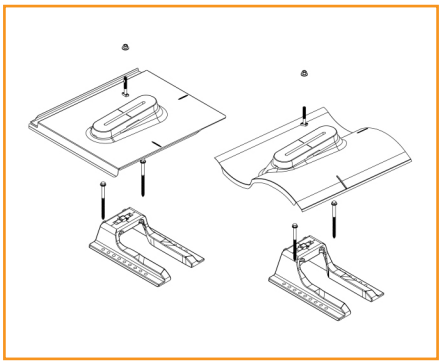

Flat & S Tile FX

BRIDGE FX

The Bridge FX supports and connects modules together. The integrated bonding features and built-in wire management trough allow for a fully bonded solution and a seamless installation. The Bridge FX also features a 1/2" spacer to aid in module spacing.

1. Wire Management Clip
2. Module Spacer

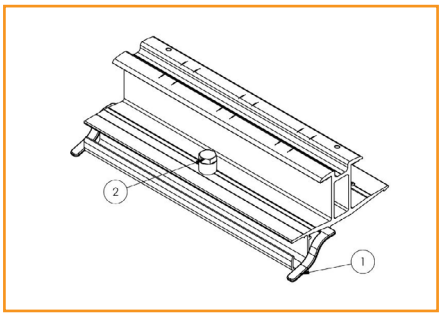

Bridge FX

NORTH BRIDGE SCREW

North Bridge Thumb Screws are used to lock Bridge FX assemblies to the modules on the north edge (northernmost row) of the array for additional rigidity and support over the life of the system.

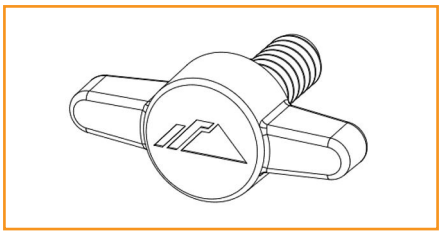

North Bridge Screw

LUG FX

Use the Lug FX to ground/earth a single PV Array. Attach to any Bridge FX on north edge of an array. Only one Grounding Lug required per continuous array, regardless of array size.

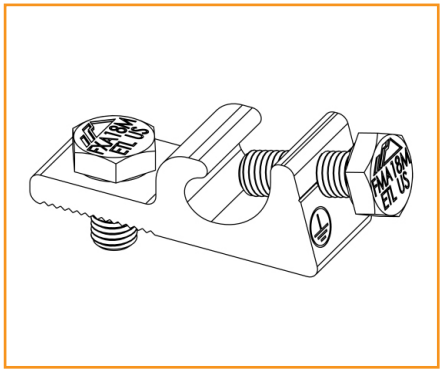

Lug FX

TRIM FX

Trim FX provides a seamless and finished aesthetic appearance. It also aids in the installation of the first row of modules.

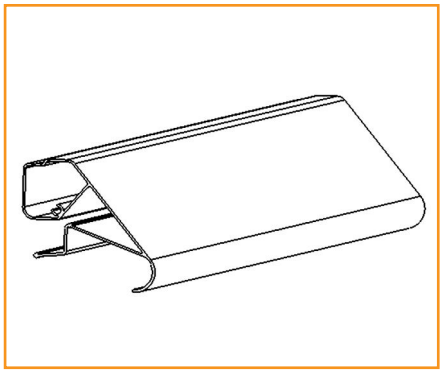

Trim FX

END CAPS

End Caps are installed on the ends of Trim FX. Only two End Caps are required per row of Trim FX. They create a seamless aesthetic finish.

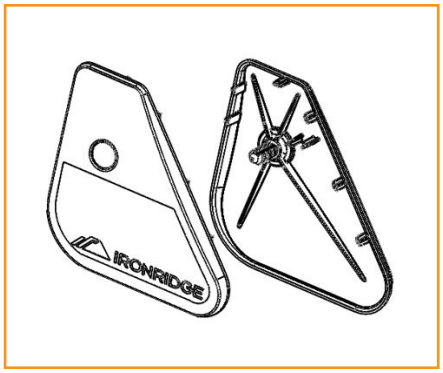

End Caps

DESIGN GUIDELINES

The information provided in this installation manual provides the end user with the information needed to custom-build and install a PV array on a composition shingle roof. Use the notes below as a guide when designing your PV array.

Identify structural and mechanical requirements for the specific project and site conditions, including:

- Roof Zones, Roof Type
- Wind Speeds, Snow Loads and other geographically specific information
- Surface Area available for array and PV module information

Spacing and Cantilever Rules:

- Maximum Span Length = 72" for Landscape; 48" for portrait, measured center of Mount to center of next mount. See span tables for site specific spans.
- Maximum Module Cantilever = 1/3 of Maximum Site Specific Span for both Portrait and Landscape orientations.
- Module to Module Gap = 1/2" in the Cross Roof direction, 3/4" in the Up Roof direction.

Create Array Layout: Using information above, an approximate layout can be created taking into account all of the obstructions that are present specific to a project.

Possible Layouts:

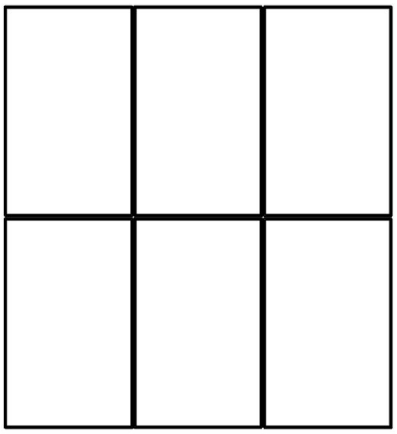

Portrait

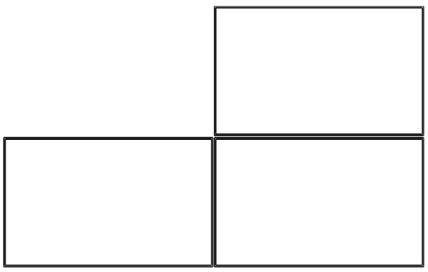

Stepped

Landscape

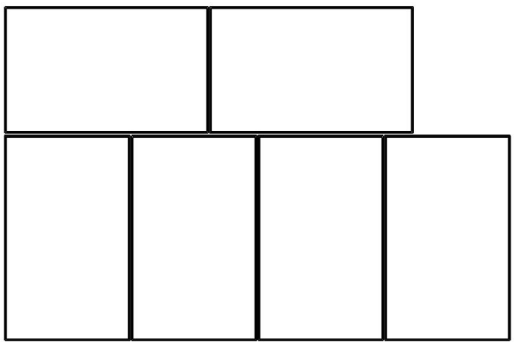

Hybrid

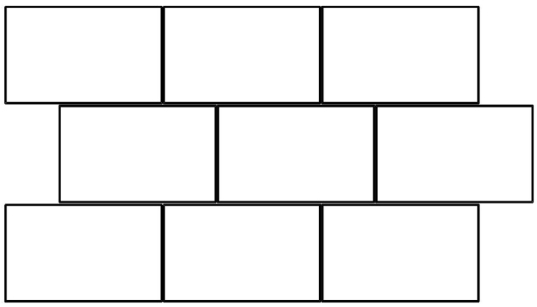

Staggered

Thermal Expansion Guidelines:

- The Bridge FX spacer is used to align modules and maintain the module gap. It also provides compliance in thermal expansion and contraction. This eliminates the need for a thermal expansion joint and does not limit array size.

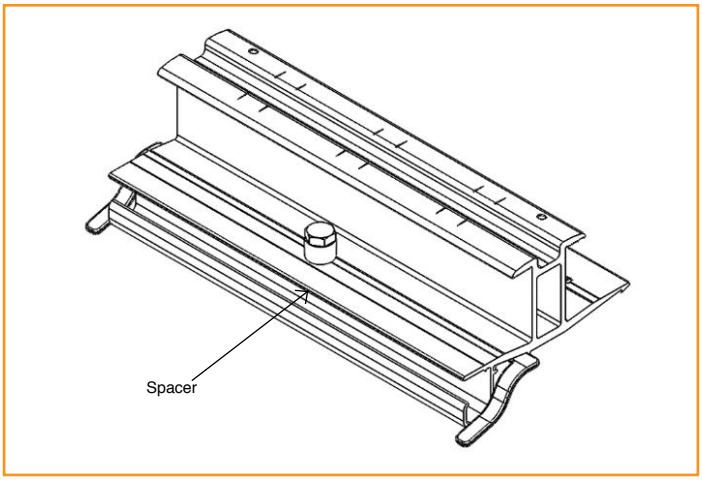

Maximum and Minimum Cantilever Rules:

- Maximum Cantilever = 1/3 of maximum span away from edge of module for both landscape and portrait orientations. Span tables are provided for landscape and portrait installations based on site conditions, and are measured from module edge to Mount FX centerline.

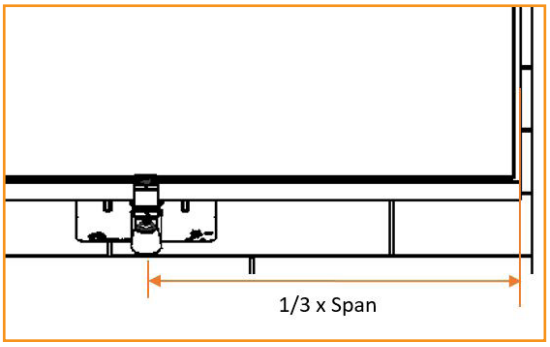

Landscape

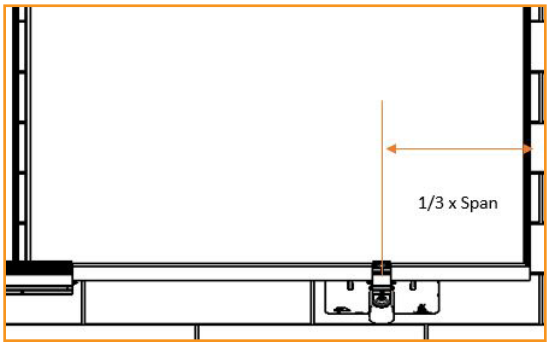

Portrait

- Centerline of Mount FX must be at least 2.25" away from module edge.

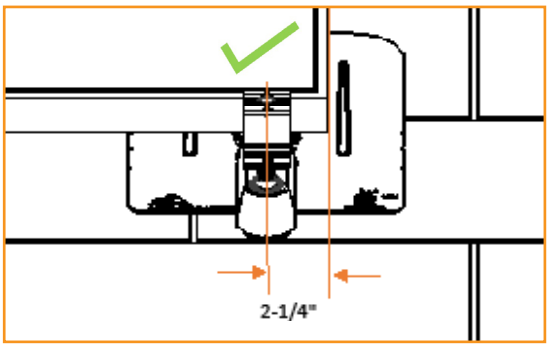

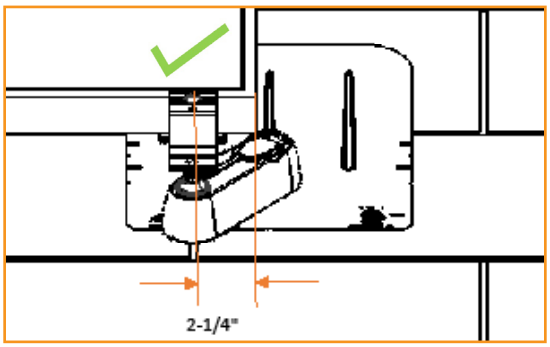

Module Support:

- Each module must have at least one Mount FX on the North and South edges. This applies in both Landscape and Portrait orientations.

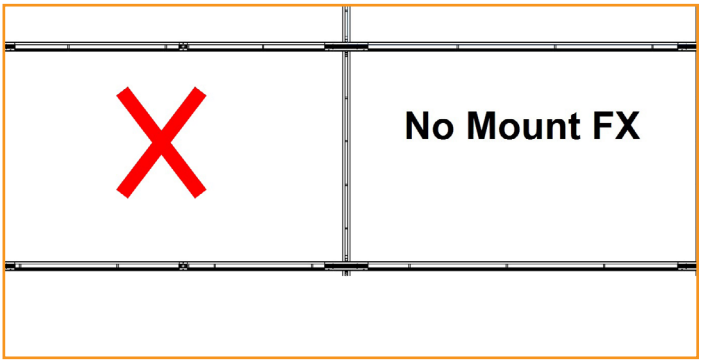

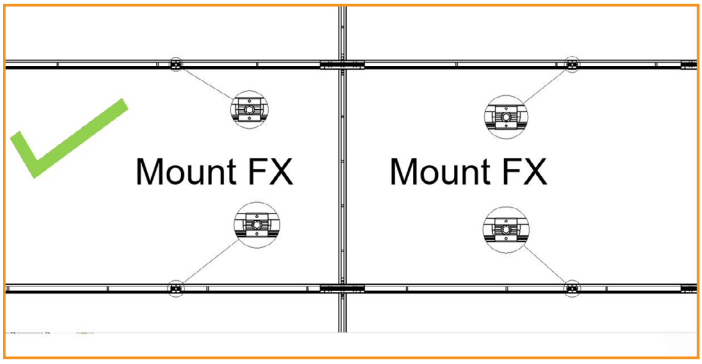

Flashing Location (Shingle Rule):

- Flash FX should not overhang a shingle drip edge by more than ¼”.
- Hole location must be a minimum of 2-3/4" above shingle edge.
- If the hole location lands less than 2 3/4" from the shingle drip edge, mark it for reference. You will then need to place the Flash FX on the next lower course of shingles so that it is 1” below the drip edge of the upper course. For the next hole location in the Up Roof direction, measure from the original marked reference location.
- Mount FX should never rest directly on shingle. In certain install scenarios it may be necessary to trim the shingle.

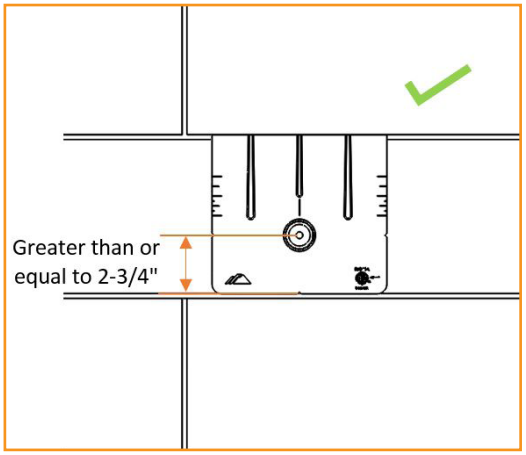

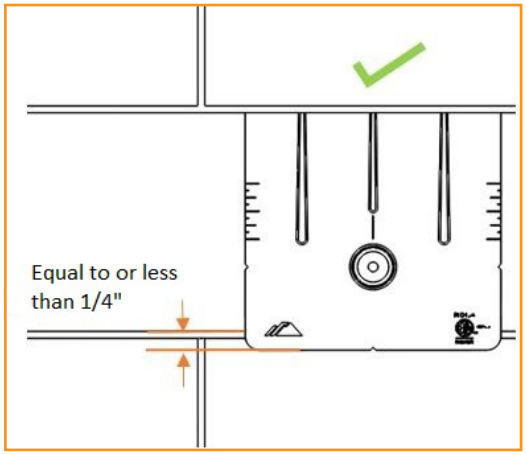

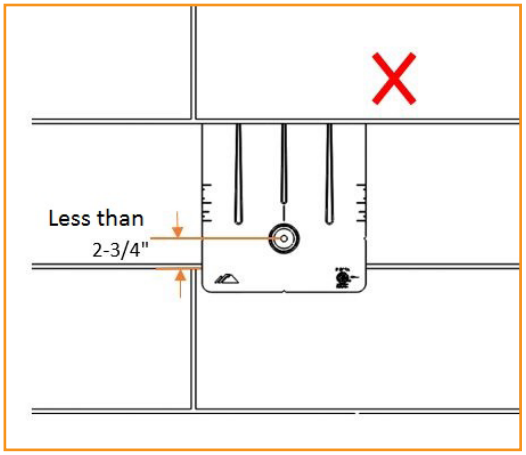

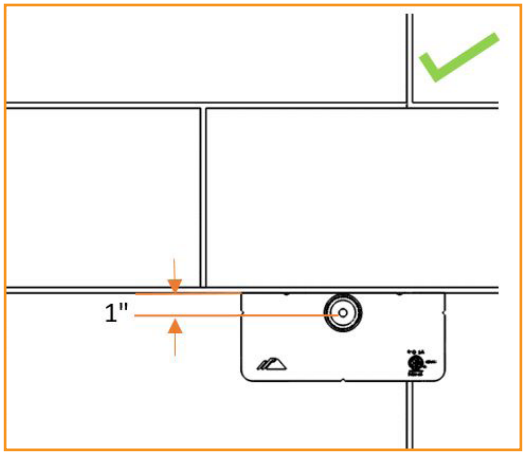

Bridge FX Application:

- A bridge is required at every Cross Roof module gap location.
- A bridge is required at every Trim FX union location in the Cross Roof direction. This maintains continuity in the array through electrical bonding.

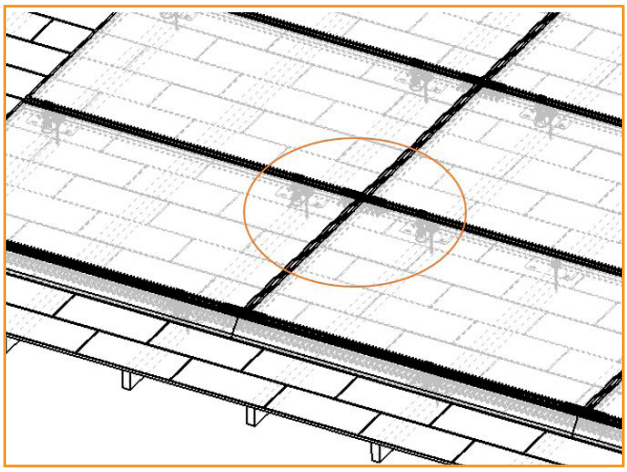

- Bridges located on the northernmost edge of an array will require thumb screws to lock them into place (refer to page 16 for detailed instructions).

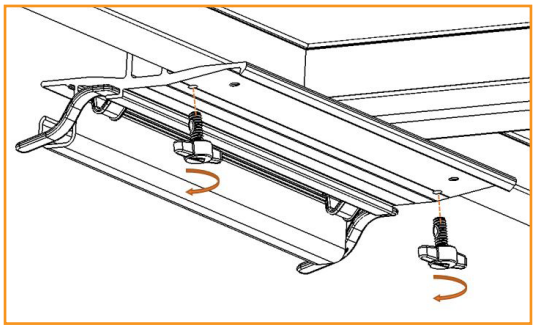

Bridge FX Position:

Bridges should be centered over module gaps by using the alignment markers. If the FX Bridge position interferes with the Mount FX location on a rafter, follow the steps below to ensure correct positioning.

1. Remove spacer from bridge.
2. Shift bridge location and swivel mount to desired position. The maximum shift of the bridge is shown on the outside alignment markers.
3. If maximizing the allowable bridge shift isn't sufficient to avoid interference with mount, relocating the mount hole will be required. The Shingle Rule stated above should be followed.

If the mount hole must be placed beneath a module, the hanger nut will need to be fastened with a wrench. This may also require trimming the shingles to prevent the mount from resting on shingles.

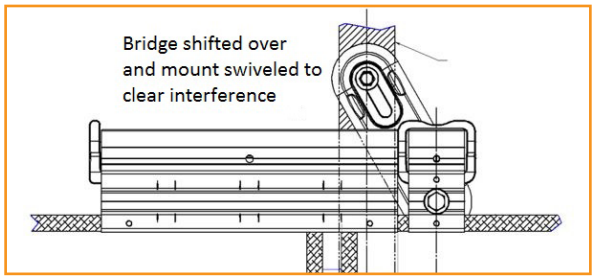

INSTALLATION STEPS

The steps laid out in the following pages explain in detail how to properly lay out and install FX System components. They also cover information on wiring your system, wire management, and module replacement.

1. LAY OUT ARRAY

A. MARK PERIMETER

Determine the position of your array and mark off the perimeter on the roof.

B. FIND ATTACHMENT LOCATIONS

Locate rafters and mark the location for the first row of attachments. This will typically be 3" from the bottom edge of the shingle.

Mark off the remaining attachment locations by measuring from the first row of attachments. You should use the module width + ¾" for landscape orientation, and module length + ¾" for portrait orientation.

A

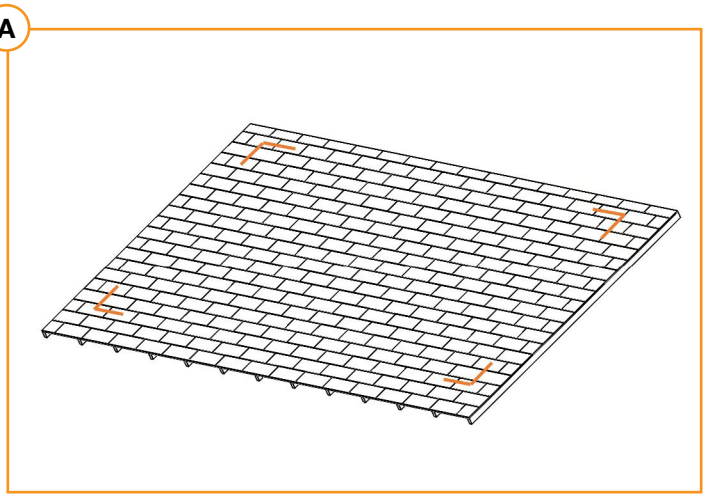

B

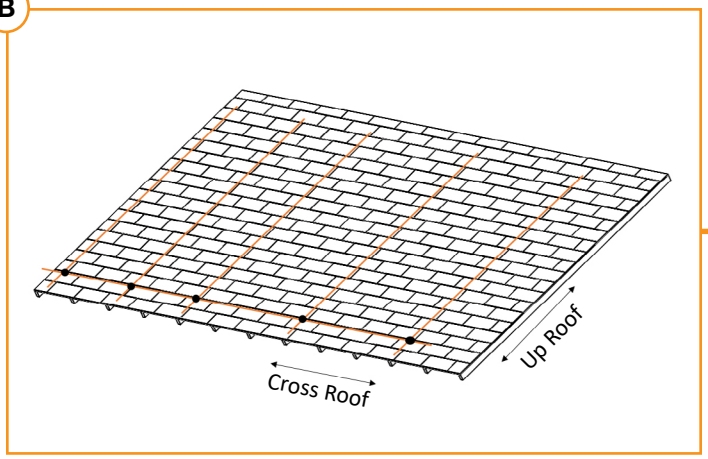

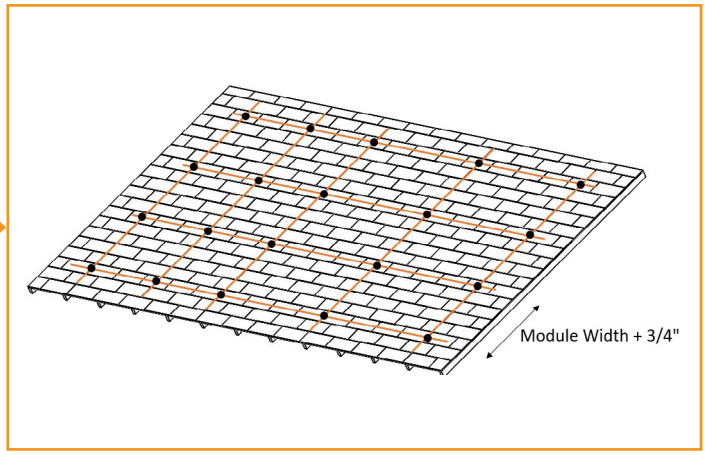

2. INSTALL FLASH FX

Drill ¼" pilot holes, 4-1/2" deep, that are centered on the rafter at each marked attachment point. Backfill the hole with approved sealant and slide flashing underneath the shingle to center over the pilot hole. Insert hanger bolt and EPDM washer assembly into pilot hole and fully seat hanger bolt on flashing dock.

Repeat for remaining attachment locations.

If installing system on a flat or s-tile roof, refer to Flat & S Tile FX installation manual for Base and Replacement Flashing installation instructions.

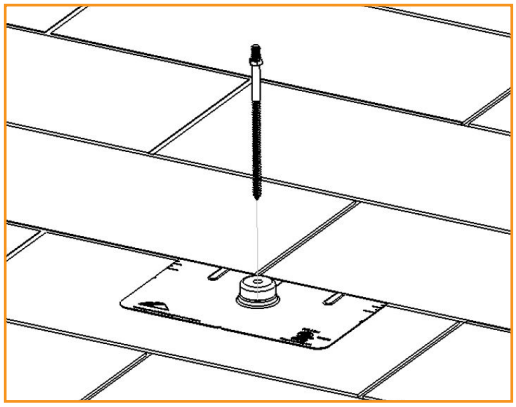

3. INSTALL FIRST ROW OF MOUNT FX

A.

Secure two mounts on either end of the first row to the flashings with hanger nuts. Position each mount so that the hanger bolt is centered on the slot. Torque to **132 in-lbs**.

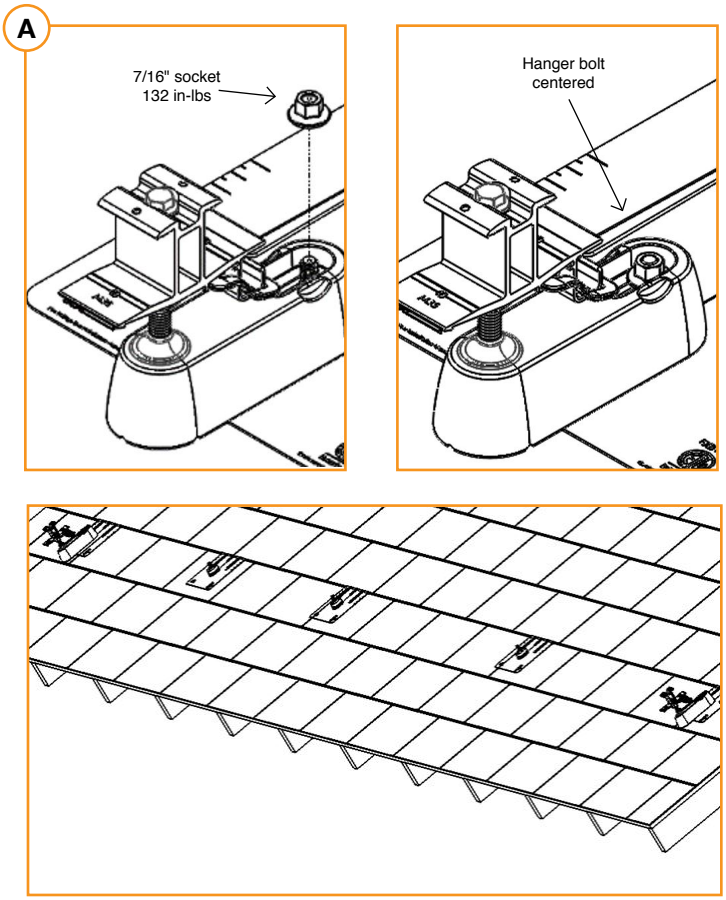

B. INSTALL MOUNTS

Attach a string line to the two outermost mounts. Run the string over the top of the mounts.

Install the middle mounts in the first row by using the string line as a reference for alignment and height adjustment.

Mounts are pre-assembled to the same height, which governs the height of the module over the roof surface.

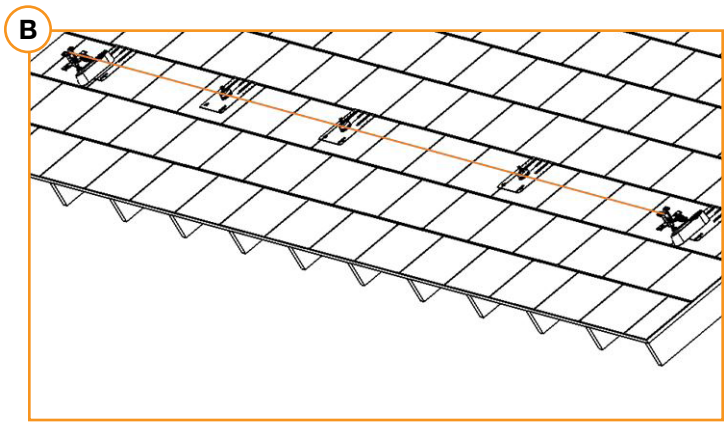

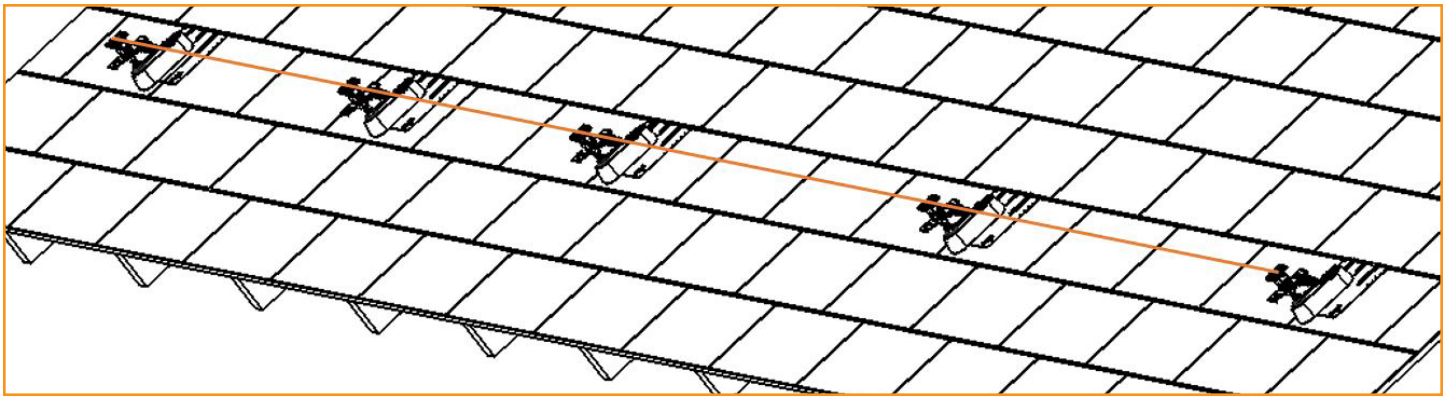

3. INSTALL FIRST ROW OF MOUNT FX

C. ADJUST MOUNT FX HEIGHT

If needed, mounts can be lowered and raised in order to accommodate any roof undulations.

To lower the module height, rotate the drive nut clockwise. To raise the module height, rotate the drive nut counterclockwise.

The total height adjustability of Mount FX is 1".
Mount FX is pre-assembled to half of that range.

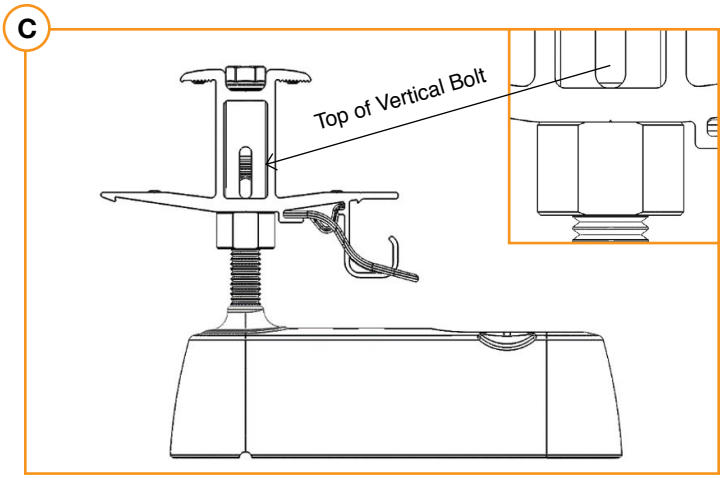

Pre-Assembled Position

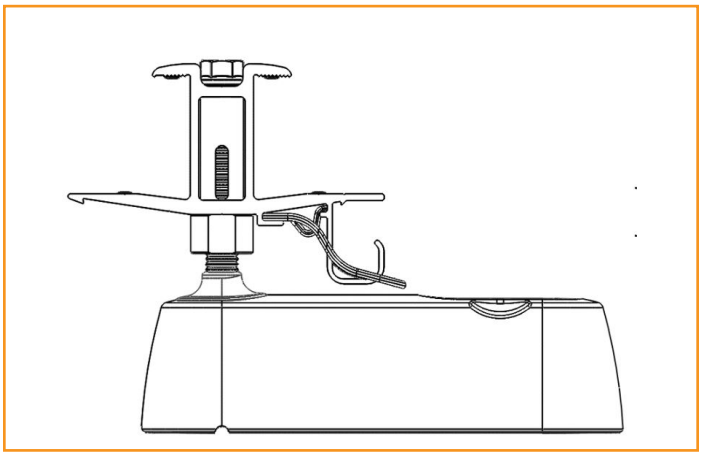

Lowest Position

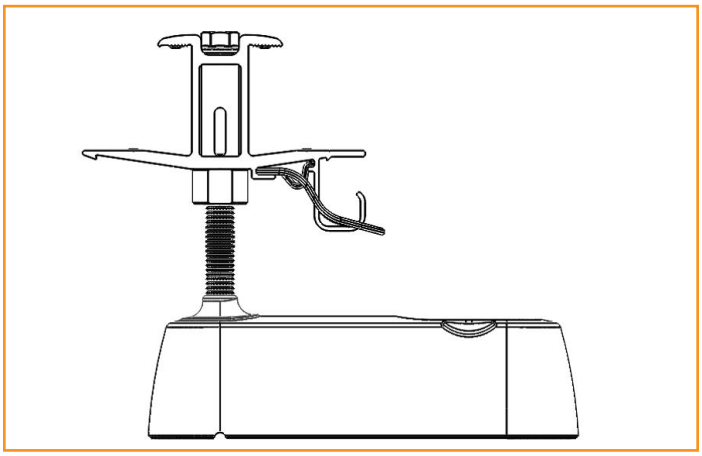

Highest Position

4. INSTALL TRIM FX AND BRIDGE FX

A. CONNECT TRIM FX TO FIRST MOUNT LOCATION

Align one end of the trim with the perimeter mark for the array.

Engage and catch the top of the trim. Then pull down on the lever and push to slide trim into place.

Go in at a shallow insertion angle when engaging catch of Trim FX with Mount FX.

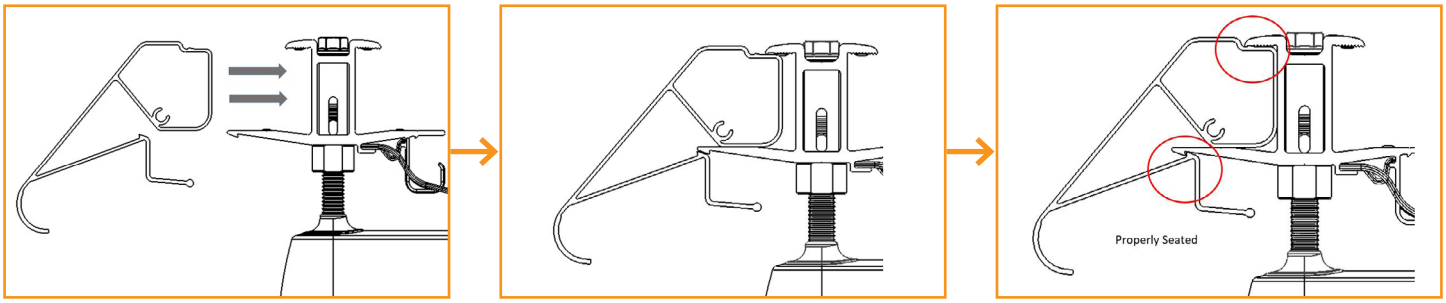

4. INSTALL TRIM FX AND BRIDGE FX

B. CONNECT TRIM FX TO BRIDGE FX

Connect the second trim to the bridge using the same method. Repeat for remaining trim and bridge assemblies.

- **Always position the ends of Trim FX so that it is centered between alignment markers.**
- **The distance between one Bridge FX bolt spacer to the next should equal the module dimension being installed.**

C. INSTALL END CAPS

Install one End Cap on each end of the connected length of Trim FX (running E-W along the bottom of the array).

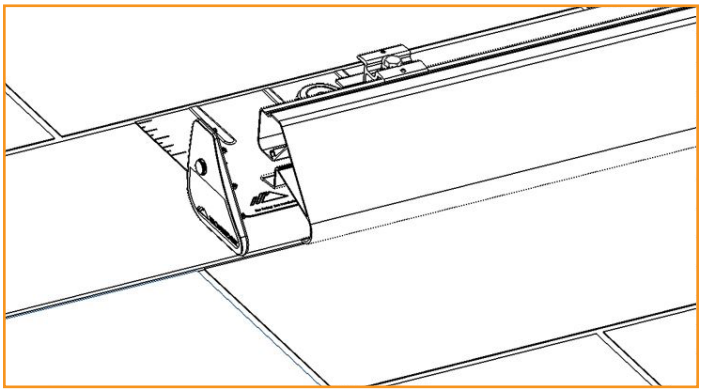

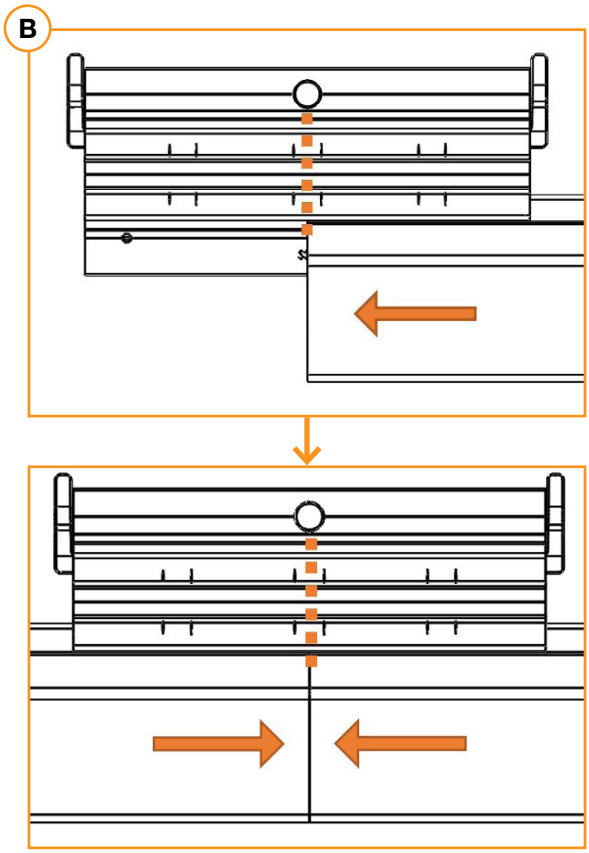

5. INSTALL MODULES

A. PLACE FIRST MODULE

Place the first module in the clamp of the mount and bridge, checking to ensure that the module edge is flush with the spacer on the bridge.

Rotate the module downward and apply pressure towards the mount and bridge to ensure that module slides into place and is properly seated.

- **Use the spacer on Bridge FX to ensure that modules are properly aligned.**

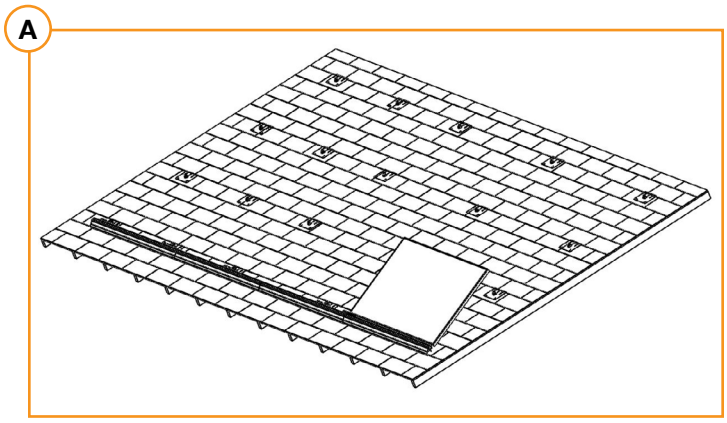

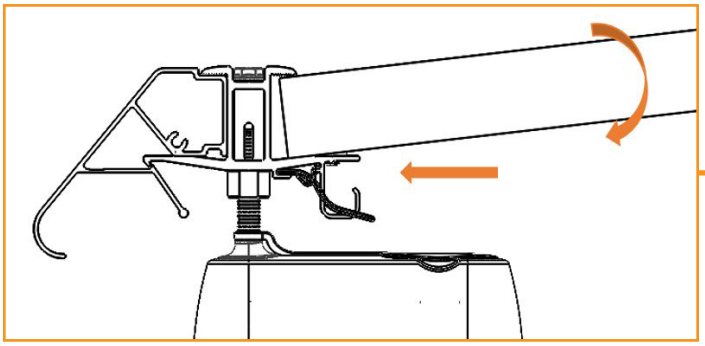

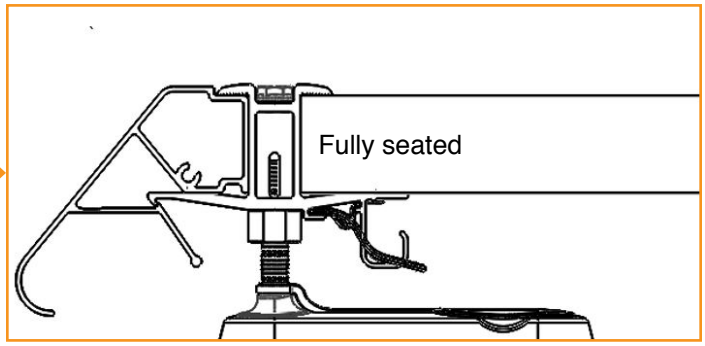

B. ATTACH NORTH EDGE

Once module is almost parallel to the roof, align mount with hanger bolt and pivot onto the north edge of the module.

Secure mount to the flashing using the hanger nut. Torque to **132 in-lbs.**

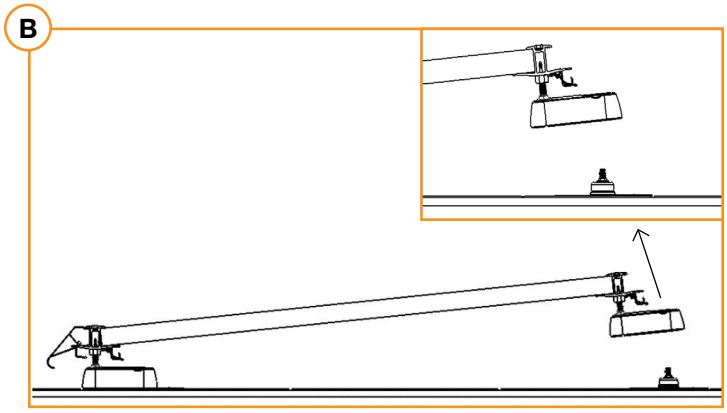

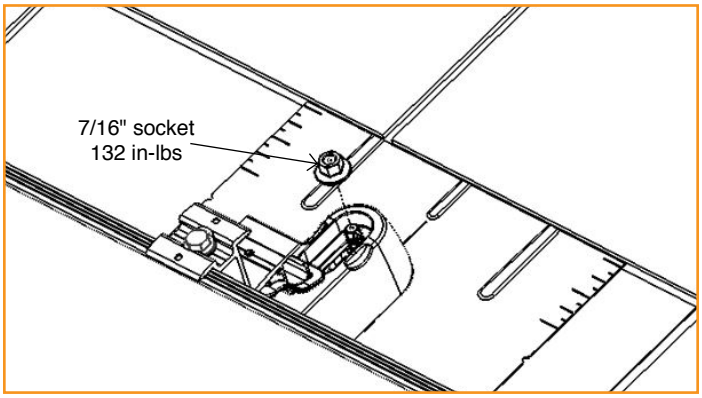

C. PLACE REMAINING MODULES IN ROW

Place the second module in the clamp of the mount and bridge, and position it so that the edges are flush with the spacers on either side.

Rotate the module downward and apply pressure towards the mount and bridge to ensure that module slides into place and is properly seated.

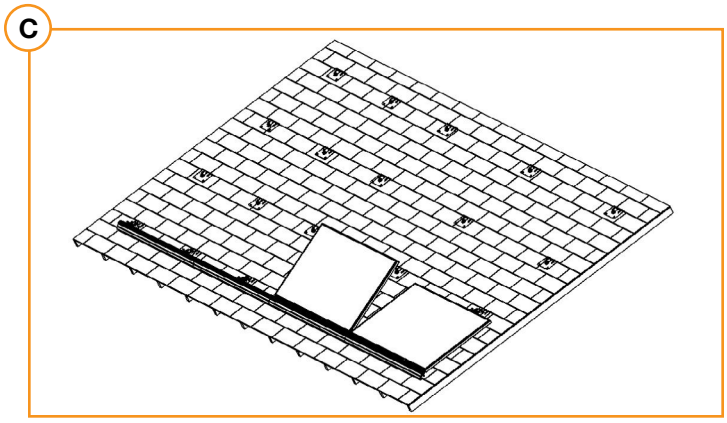

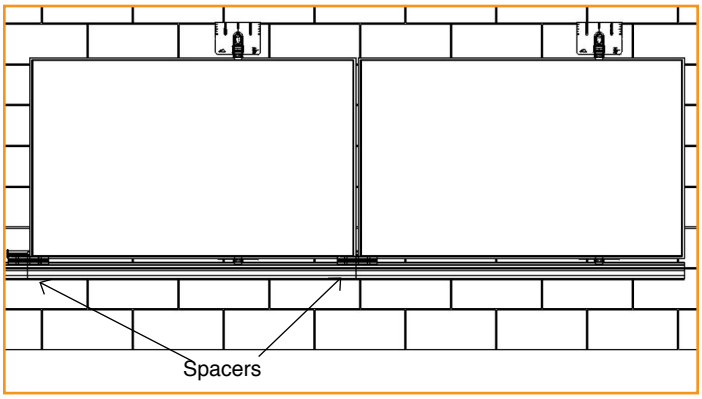

D. CONNECT MODULES WITH BRIDGE FX

Slide a bridge onto first and second modules to secure them.

Repeat steps above for all modules in the first row.

You can manage wires by using your preferred PV wire clips. See the Wire Management section for detailed information.

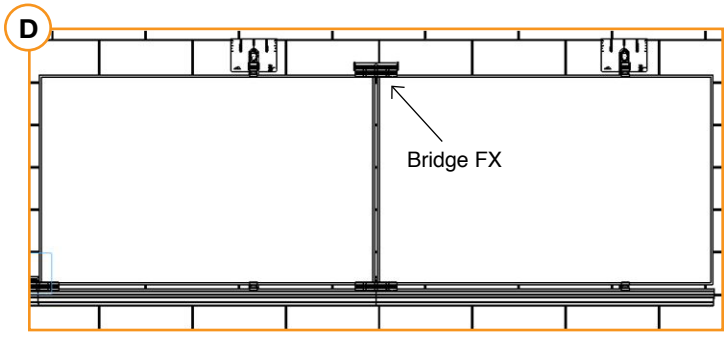

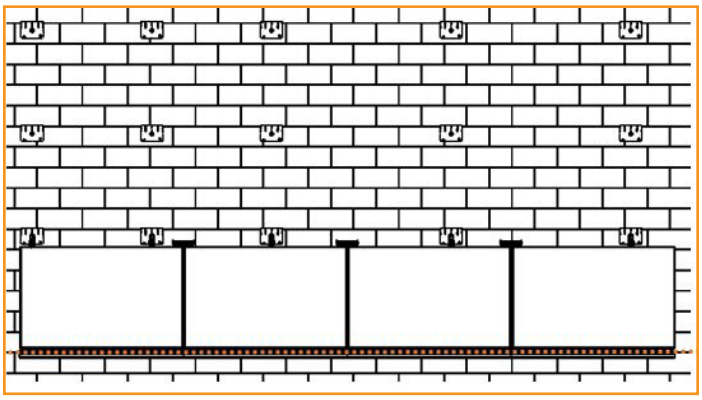

E. ADJUST FX MOUNT HEIGHT

If there are undulations in the roof, you will need to adjust the mounts so that all of the modules are at the same level. Each mount can be raised and lowered by rotating the drive nut with a 7/16" hex drive.

To lower the module height, rotate the drive nut clockwise.

To raise the module height, rotate the drive nut counterclockwise.

Double-check to make sure that the alignment and height of the modules are level and in plane. All modules should run parallel to the roof edge.

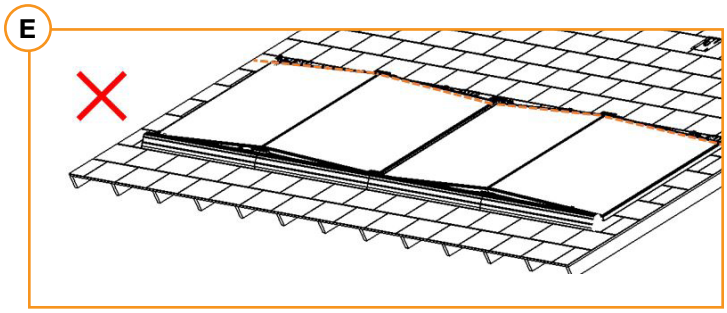

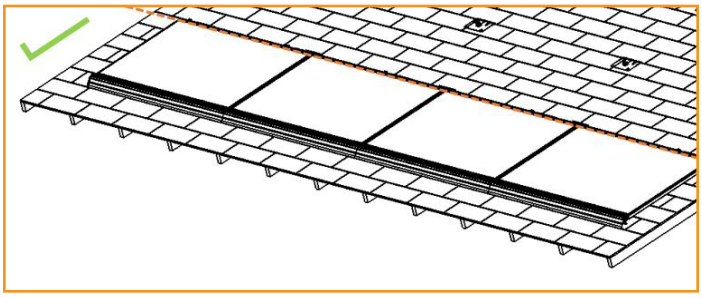

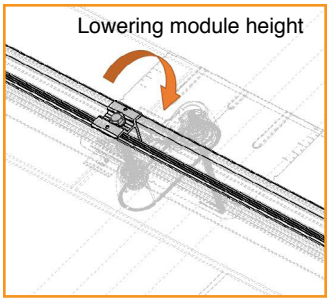

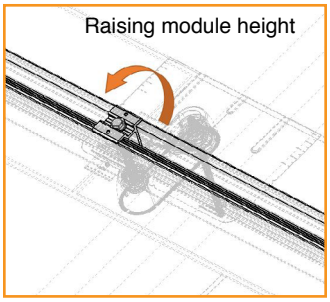

5. INSTALL MODULES

F. INSTALL REMAINING ROWS OF MODULES

Repeat the steps above to install each row until the desired array is complete.

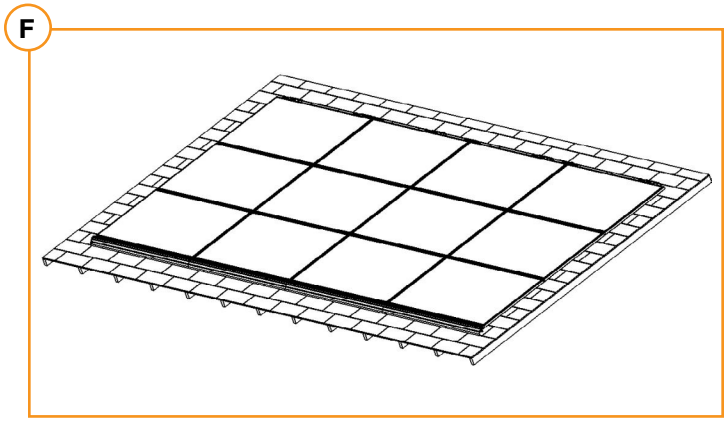

G. LOCK NORTH EDGE

Once all modules are in place, thread North Bridge Screws onto each bridge at the north edge of the array until screws have engaged module frame.

- **Screws provide a rigid support and lock the bridges on the north edge of the array firmly into position.**
- **North Bridge Screws are only installed on the north edge of the array.**

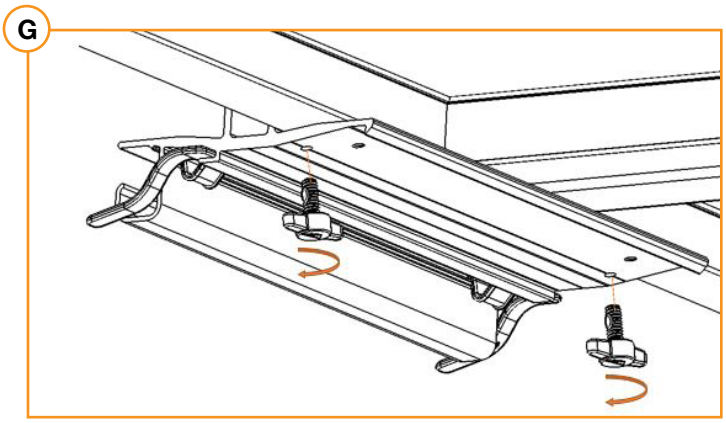

6. INSTALL LUG FX

SECURE LUG FX

Replace the spacer on any north edge bridge with Lug FX. Torque to **60-in-lbs.**

- **Only one Lug FX is required per continuous array, regardless of array size.**

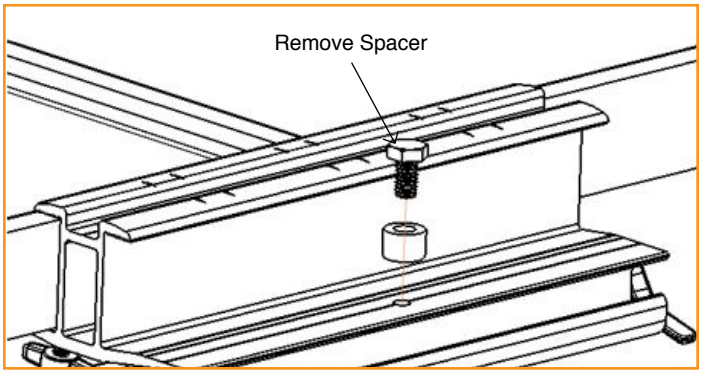

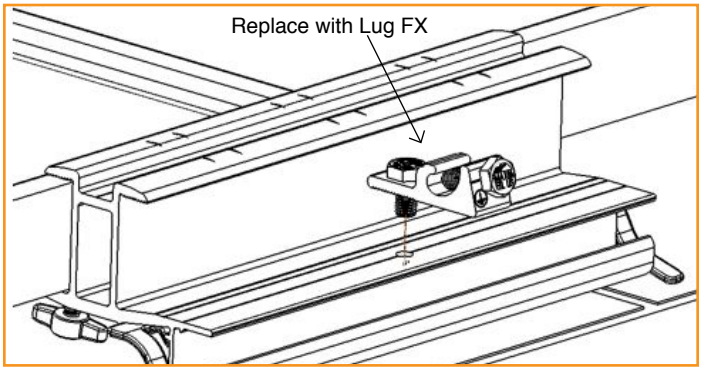

7. INSTALL GEC

ATTACH COPPER WIRE

Install a minimum 10 AWG solid copper or stranded grounding wire. Torque terminal screw to **20 in-lbs.**

Grounding Lugs are rated for use with one solid or stranded copper wire, conductor size 10-4AWG.

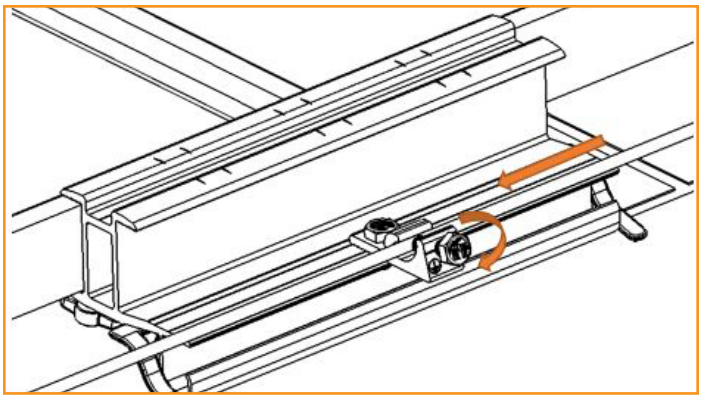

ELECTRICAL DIAGRAM

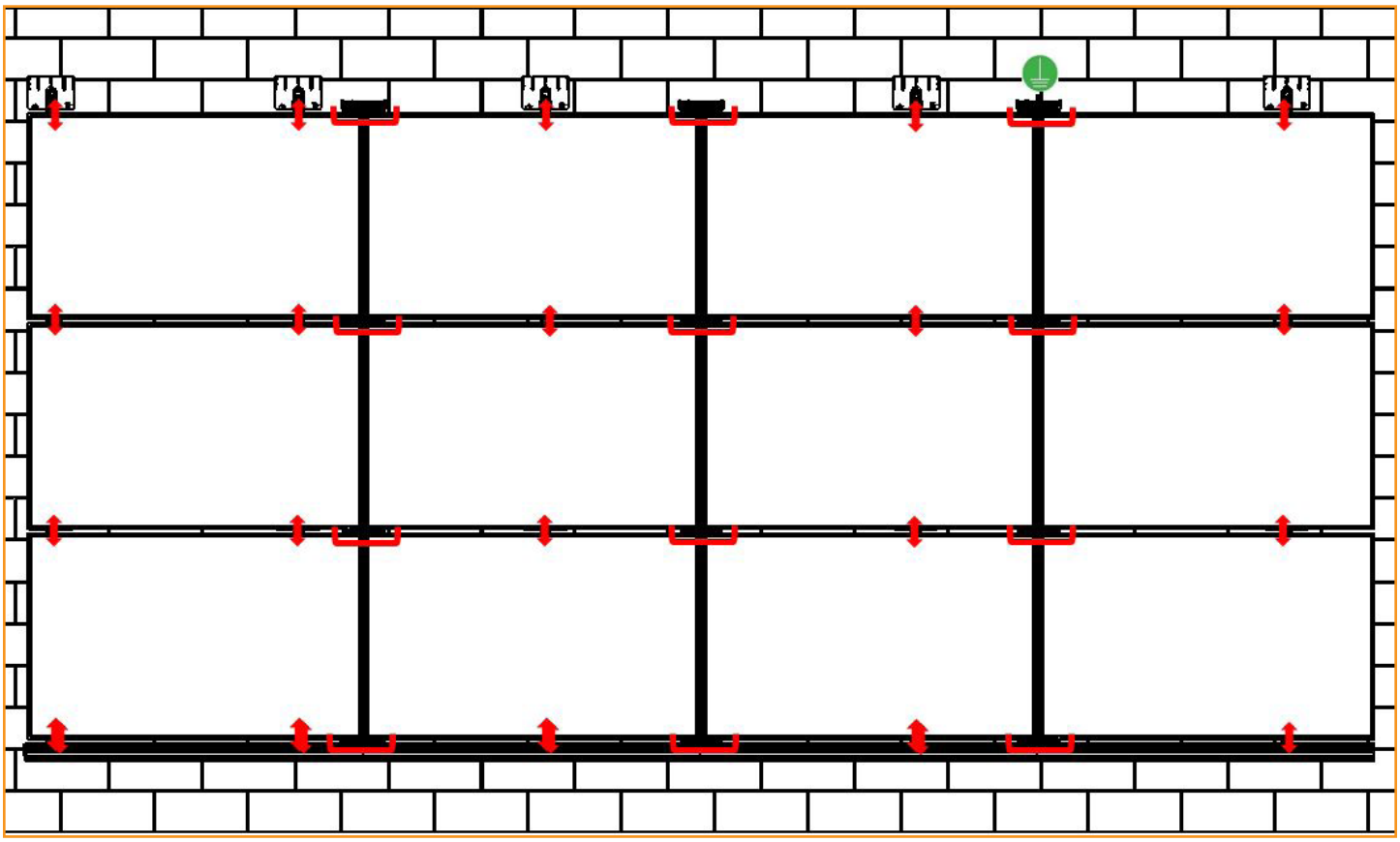

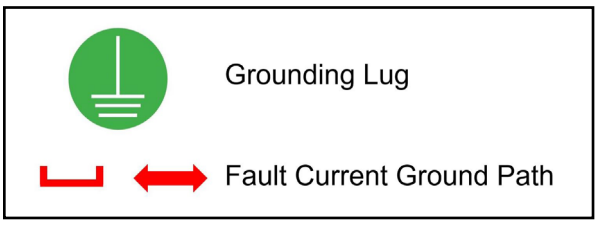

7. WIRE MANAGEMENT

A. PLACE WIRES IN TROUGH

Insert microinverter or power optimizer cables into the wire management trough on Mount FX by holding the wire clip up and sliding the cables in.

- **The wire management trough on Mount FX can hold up to one 12mm trunk cable, or two PV cables, or four USE-2 wires.**
- **Mount FX utilizes wire clips that maintain tension but do not cause any damage to the surface of wire insulation.**
- **Wire management clips can also be used to attach PV or USE-2 wires to the bottom leg of the module frames. This should be done before installing modules on the array in order to reduce work on the roof.**

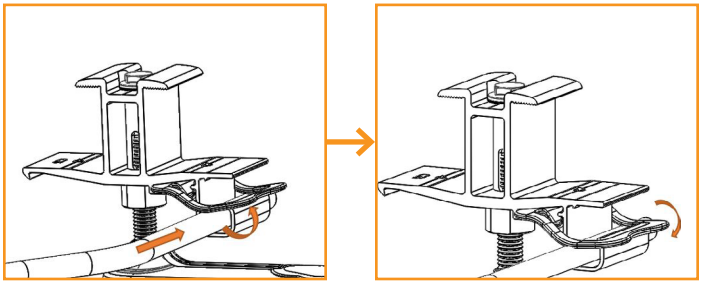

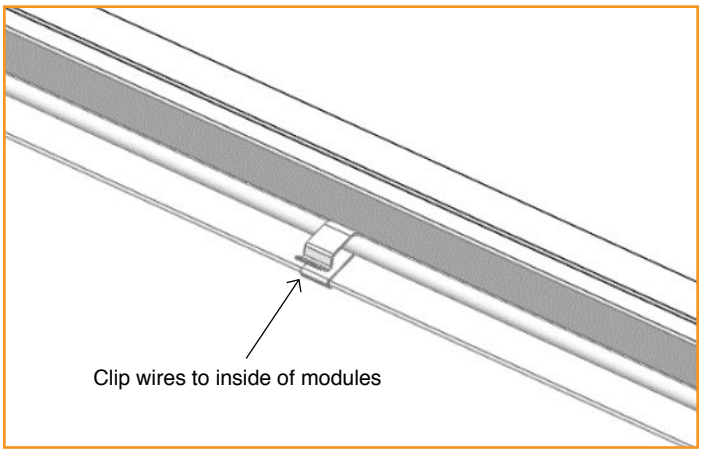

SAMPLE WIRING LAYOUT

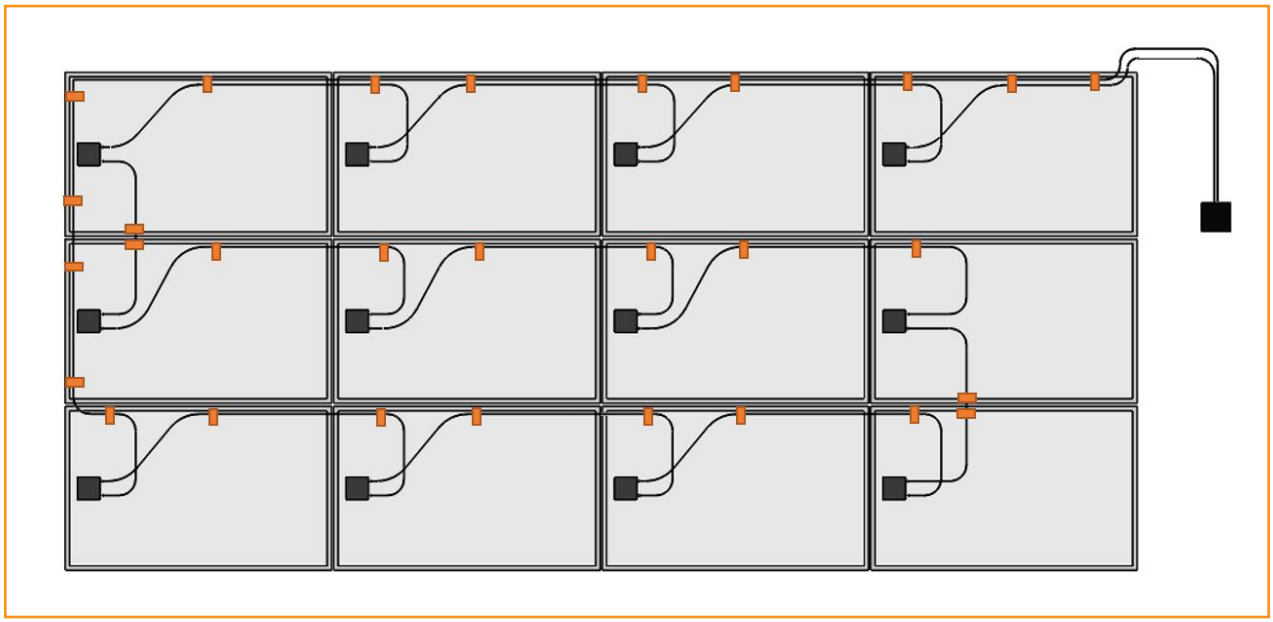

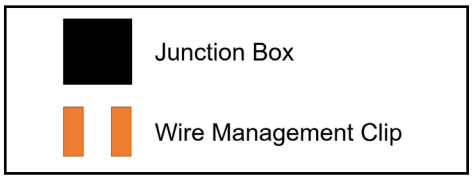

ARRAY MAINTENANCE

During the lifetime of a residential rooftop installation, you may need to replace modules or clean the debris that collects underneath the array. Any of these maintenance activities can be carried out through the steps laid out below. Modules can be accessed from both the north and south edges of the array, thus reducing the number of modules that must be detached in order to reach the specific module.

A. MODULE REPLACEMENT FROM NORTH EDGE

Locate the module that needs to be replaced. Proceed to remove the modules and FX System parts in a "reverse pyramid order" (see diagram below). All the parts that have a red "X" will need to be detached and removed in order to reach the marked module.

- **Open AC and DC disconnects before servicing array.**
- **Disconnect module wiring as you follow the module replacement steps.**
- **You will need to remove Lug FX and loosen North Bridge Screws installed on the north edge bridges of the array.**

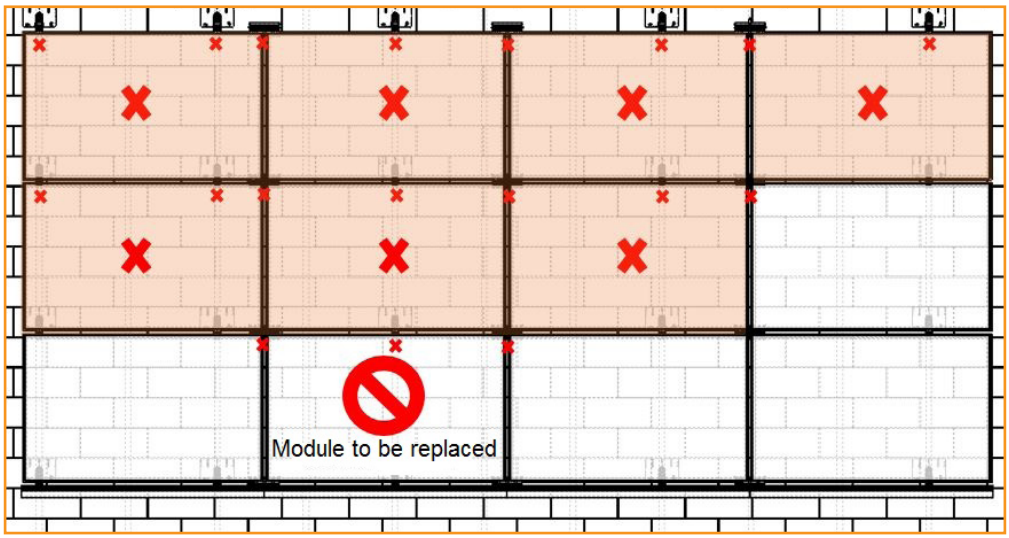

B. MODULE REPLACEMENT FROM SOUTH EDGE

First, remove the trim by pressing down on the release lever and pulling off the trim that runs along the south edge of the array. Then proceed to remove the modules and FX System parts in a "pyramid order" (see diagram below).

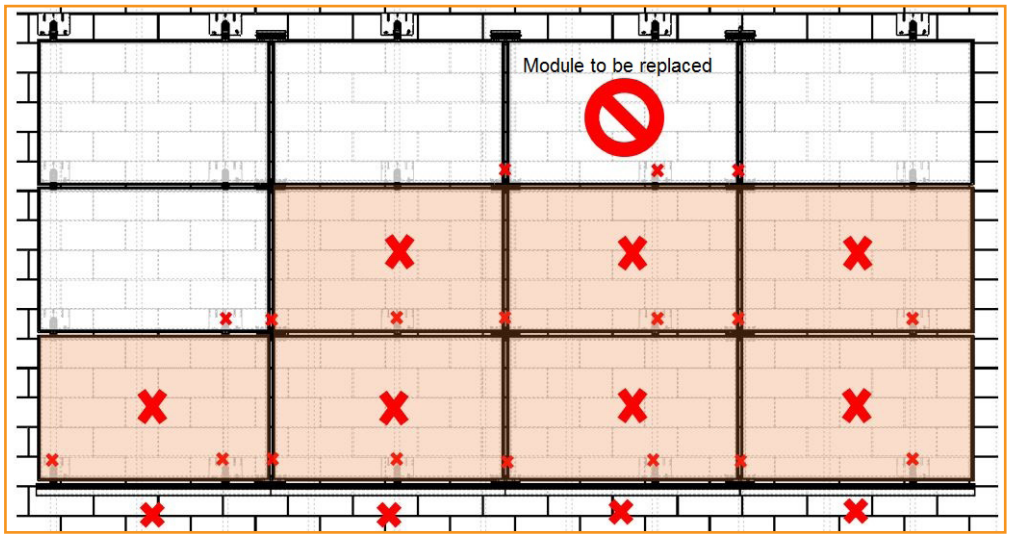

MODULE COMPATIBILITY

The FX System may be used to ground and/or mount a PV module complying with UL 1703 only when the specific module has been evaluated for grounding and/or mounting in compliance with the included instructions. Unless otherwise noted, “xxx” refers to the module power rating and both black and silver frames are included in the certification.

MANUFACTURER	MODELS
Axitec	Axitec modules with 35 mm frames AC-xxxY/aaZZ Where "xxx" is the module power rating; "Y" can be M, P, or MH; and "aa" can be blank, 125 or 156; and "ZZ" can be 60S or 120S
Canadian Solar	Canadian Solar modules with 35 and 40 mm frames CSbY-xxxZ Where "b" can be 1, 3 or 6; "Y" can be H, K, P, or V; "xxx" refers to the module power rating; and "Z" can be M, MS, M-SD, MS-SD, P, PX, or P-SD
Hanwha Q CELLS	Hanwha QCells modules with 32 mm frames aaYY-ZZ-xxx Where "aa" can be Q. or B.; "YY" can be PLUS, PRO, PEAK, LINE PLUS, LINE PRO, or PEAK DUO; "ZZ" can be G4, G4.1, BFR-G3, BLK-G3, BFR-G3.1, BLK-G3.1, BFR-G4, BFR-G4.1, BFR G4.3, BLK-G4.1, G4/SC, G4.1/SC, G4.1/TAA, G4.1/MAX, BFR G4.1/TAA, BFR G4.1/MAX, BLK G4.1/TAA, BLK G4.1/SC, EC-G4.4, G5, BLK-G5, G6, BLK-G6, G7, BLK-G7, G7.2, G8, BLK-G8, G8+, BLK-G8+ ; and "xxx" is the module power rating
Hyundai	Huyndai modules with 35 mm frames HiY-SxxxZZ Where "Y" can be A, M or S; "xxx" refers to the module power rating; and "ZZ" can be HG, KI, MF, MG, SG, RG, RG (BK), or TG
JA Solar	JA Solar modules with 35 and 40 frames JAyyzz-60bb-xxx/aa Where “yy” can be M, P, M6 or P6; “zz” can be blank, (K), (L), (R), (V), (BK), (FA), (SE), (TG), (FA)(R), (K)(SE), (K)(TG), (L)(BK), (L)(TG), (R)(BK), (R)(TG), (V)(BK), (BK)(TG), or (L)(BK)(TG); "bb" can be blank, S01, SO2, SO3, S09, S10; “xxx” is the module power rating; and “aa” can be MP, SI, SC, PR, RE, 3BB, 4BB, 4BB/RE, 4BB/1500V, PR/1500V, 5BB
Jinko	Jinko modules with 35 and 40 mm frames JKMYxxxZZ-aa Where "Y" can either be blank or S; "xxx" is the module power rating; "ZZ" can be M, P, PP, or -V; and "aa" can be blank, 60, 60B, 60H, 60L, 60BL, 60HBL, 60-J4, 60B-J4, 60B-EP, 60(Plus), 60-V, or 60-MX
LG	LG modules with 40 mm frames are LGxxxy1z-bb Where "xxx" is the module power rating; "y" can be A, E, N, Q, or S; "z" can be C or K; and "bb" can be G4, A5, or V5 (G4 Models not compatible with portrait installations)
Longi	Longi modules with 35 and 40 mm frames LRa-60ZZ-xxxM Where "a" can be 4 or 6; "ZZ" can be blank, BK, PB, PE, PH, HPB, or HPH; and "xxx" is the module power rating.
Mission Solar	Mission Solar modules with 40 mm frames MSExxxZZaa Where "xxx" is the module power rating; "ZZ" can be SO or SQ, and "aa" can be 4J, 4S, 5K, 5T, 8T, or 8K
Sunpower	Sunpower modules with 40 mm frames SPR-A-xxx-YY Where “xxx” is the module power rating and “YY” can be blank or G-AC
Panasonic	Modules with 40mm frames ans model identifier VBHNxxxYYzz; "YY" can be either SA or KA; and "zz" can be either 03, 04, 17 or 18.
Trina	Trina modules with 35 mm frames TSM-xxxYYZZ Where "xxx" refers to the module power rating; "YY" can be PA05, PC05, PD05, DD05, or DD06; and "ZZ" can be blank or A or A.05, A.08, A(II), A.05(II), A.08(II), H, H.05, H.08, H.05(II), H.08 (II), M, M(II)
Yingli	YGE and YLM series modules with 35 and 40 mm frames

THIRD PARTY COMPONENTS

The following third party microinverter and power optimizer mounting brackets have been tested or evaluated for use with the FX System:

- Quick Mount PV QMAFB (for SolarEdge power optimizers only)
- Enphase EFM-XXMM
- Ecofasten Solar Rock-it Clip 2.0 (for both SolarEdge power optimizers and Enphase microinverters)
- Unirac MLPE Mount