COUNTY OF LOS ANGELES PUBLIC WORKS
DEPARTMENT OF ANIMAL CARE AND CONTROL
HEADQUARTERS FENCING PROJECT

5898 Cherry Ave, Long Beach, CA 90805

SPEC NO. 7856

BACK CHECK 1

ABBREVIATIONS

&	AND
@	AT
A.B.	ANCHOR BOLT
A.C.	ASPHALT CONCRETE
A.F.F.	ABOVE FINISHED FLOOR
ACCOUS	ACCOUSTICAL
ADJ	ADJUSTABLE
ALT	ALTERNATE
ASP	ASPHALT
ATTEN	ATTENUATION
B. ROD	BACKER ROD
B.F.E.	BASE FLOOR ELEVATION
B.F.P.D.	BACKFLOW PREVENTION DEVICE
BD	BOARD
BET	BETWEEN
BLDG	BUILDING
BM	BEAM
C.B.C.	CALIFORNIA BUILDING CODE
C.B.U.	CEMENTITIOUS BACKER UNIT
C.I.	CAST IRON
C.M.U.	CONCRETE MASONRY UNIT
C.T.	CERAMIC TILE
CAB	CABINET
CEM	CEMENT
CER	CERAMIC
CL	CENTERLINE
CLG	CEILING
COL	COLUMN
COMPO	COMPOSITION
CONC	CONCRETE
CONN	CONNECTION
CONST	CONSTRUCTION
CONT	CONTINUOUS
CSK	COUNTERSUNK OR
D.F.	DOUGLAS FIR
D.S.	DOWN SPOUT
D.W.S.S.	DRYWALL SUSPENSION SYSTEM
DEMO	DEMOLISH
DET	DETAIL
DIA or Ø	DIAMETER
DIAG	DIAGONAL
DIM	DIMENSION
DO	DITTO OR REPEAT
DR	DOOR
DWG	DRAWING
DWR	DRAWER
(E)	EXISTING
E.C.	ELECTRICAL CONTRACTOR
E.J.	EXPANSION JOINT
E.P.	ELECTRICAL PANEL
E.W.	EACH WAY
E.W.C.	ELECTRICAL WATER COOLER
EA	EACH
EL	ELEVATION
ELEC	ELECTRICAL
ELEV	ELEVATOR
ENV	ENVELOPE
EQ	EQUAL
EQUIP	EQUIPMENT
EXIST	EXISTING
EXP	EXPOSED
EXT	EXTERIOR
F.D.	FLOOR DRAIN
F.E.	FIRE EXTINGUISHER
F.F.	FINISH FLOOR OR FACTORY FINISH
F.G.	FINISH GRADE
F.H.	FIRE HYDRANT
F.H.C.	FIRE HOSE CABINET
F.L.	FLOW LINE
F.O.B.	FACE OF BRICK
F.O.S.	FACE OF STUD
F.O.W.	FACE OF WALL
FIN	FINISH/ 'ED
FLR	FLOOR
FLUOR	FLUORESCENT
FT or '	FEET
FUT	FUTURE
G.I.	GALVANIZED IRON
G.S.B.	GYPSUM SHEATHING BOARD
G.W.B.	GYMPSUM WALLBOARD
GA	GAUGE
GALV	GALVANIZED
GL	GLASS
GYP	GYPSUM
H	HIGH
H.B.	HOSE BIBB
H.M.	HOLLOW METAL
HDW	HARDWARE
HDWD	HARDWOOD
HGT	HEIGHT
HORIZ	HORIZONTAL
HR	HOUR
HTR	HEATER
HVAC	HEATING, VENTING & AIR CONDITIONING
I.D.	INSIDE DIMENSION
IN or "	INCH
INSUL	INSULATION
INT	INTERIOR
INV	INVERT
JAN. CLO.	JANITOR CLOSET
JST	JOIST
JT	JOINT
K.P.	KICK PLATE
KD	KNOCK-DOWN
L.F.C.	LAB FURNISHING CONTRACTOR
LAB	LABORATORY
LAM	LAMINATED
LAV	LAVATORY
LB/ #	POUNDS
LG	LONG
LT/LGT	LIGHT
M.C.	MECHANICAL CONTRACTOR
M.O.	MASONRY OPENING
M.T.	METAL TRIM OR METAL THRESHOLD
MAT'L	MATERIAL
MAX	MAXIMUM
MECH	MECHANICAL
MET	METAL
MFR	MANUFACTURER
MIN	MINIMUM
MISC	MISCELLANEOUS
MTD	MOUNTED
MTL	METAL
(N)	NEW
N.A.	NOT APPLICABLE
N.I.C.	NOT IN CONTRACT
N.R.	NON-RATED
N.T.S.	NOT TO SCALE
NAT	NATURAL
NO.	NUMBER
O.C.	ON CENTER
O.D.	OUTSIDE DIMENSION
O.F.	OWNER FURNISHED
O.F.C.I.	OWNER FURNISHED CONTRACTOR INSTALLED
O.F.O.I.	OWNER FURNISHED, OWNER INSTALLED
O.H.	OVERHEAD
O.S.B.	ORIENTED STRAND BOARD
OBS	OBSCURE
OFD	OVERFLOW DRAIN
OPNG	OPENING
OPP	OPPOSITE
P.B.	PUSH BUTTON
P.G.	PAINT GRADE
P.I.P.	POURED-IN-PLACE
P.J.	PANEL JOINT
P.LAM	PLASTIC LAMINATE
P.O.C.	POINT OF CONNECTION
P.V.C.	POLY VINYL CHLORIDE
PAN	PANEL
PARTN	PARTITION
PL	PLATE
PLAS	PLASTER
PLYWD	PLYWOOD
POL	POLISHED
PSI	POUND PER SQUARE-INCH
PTD	PAINTED
R.D.	ROOF DRAIN
R.O.	ROUGH OPENING
RAD	RADIUS
RD	ROUND
REF	REFRIGERATOR OR REFERENCE
REQ'D	REQUIRED
REV	REVISION
RGH	ROUGH
RM	ROOM
RW	REDWOOD
S.B.	SPLASH BLOCK
S.R.	SPRINKLER RISER
SAT	SUSPENDED ACOUS TILE
SCHED	SCHEDULE
SECT	SECTION
SH	SHELF
SHT	SHEET
SIM	SIMILAR
SLNT	SEALANT
SMS	SHEET METAL SCRE
SPECS	SPECIFICATIONS
SS	STAINLESS STEEL
STD	STANDARD
STRUCT	STRUCTURAL
SUSP	SUSPENDED
SVS	SERVICE SINK
T&B	TOP & BOTTOM
T&G	TONGUE AND GROOVE
T.O.	TOP OF -
TB	TACKBOARD
TEL	TELEPHONE
THK	THICK
TS	TUBE STEEL
TYP	TYPICAL
U.B.C.	UNIFORM BUILDING CODE
U.N.O.	UNLESS NOTED OTHERWISE
UNF	UNFINISHED
V.I.F.	VERIFY IN FIELD
V.JT	V-JOINT
V.T.R.	VENT THROUGH ROOF
VCT	VINYL COMPOSITION TILE
VENT	VENTILATION OR VENTILATE
VERT	VERTICAL
VEST	VESTIBULE
VOL	VOLUME
W	WIDE OR WEST
W.C.	WATER CLOSET
W.H.	WATER HEATER
W.I.	WROUGHT IRON
W.P.	WATERPROOF
W.S.	WET STANDPIPE OR WOOD SCREW
W/	WITH
WD	WOOD
WG	WIRE GLASS
WNSCT	WAINSCOT

GENERAL BUILDING INFORMATION

SCOPE OF WORK SUMMARY:

INCLUDING BUT NOT LIMITED TO: DEMOLISH LIMITED AREAS OF CONCRETE AND ASPHALT PAVING & BASE, CONCRETE CURBING, LIGHT POLES AND BASES. GRUBBING OF VARIOUS TREES, STUMPS AND TURF, RELOCATION OF IRRIGATION CONTROL VALVES & ASSOCIATED PIPING.

CONSTRUCT NEW ASPHALT PAVING & BASE, CONCRETE PAVING AND CURBING, LIGHT POLE BASES AND FIXTURES, STALL STRIPING, WHEEL STOPS, PARKING LOT SIGNAGES, ACCESS CONTROLS CARD READERS STANDARD IN-GROUND MOUNTS AND CONCRETE FILLED PROTECTION BOLLARDS.

CONSTRUCT ELECTRICAL PANELS & PULLBOXES, GROUND RODS, CONDUITS, U/G DUCTBANKS, CABLES AND CONDUCTORS FOR PARKING LOT LIGHTING AND GATE OPERATIONS. ACCESS CONTROLS.

DESIGN-BUILD: PERIMETER SECURITY FENCE WITH OUTWARD SPEARS, ACCESSABLE PEDESTRIAN SWING GATES & VEHICLE GATES, MOTORIZED OPERATORS AND ACCESS CONTROLS WITH RFID CAPABILITIES AND UNDERGROUND LOOPS & DETECTORS.

STANDARD IN-GROUND GOOSE-NECK MOUNTING POST USED FOR CARD READERS ACCESS CONTROL DEVICES.

AIN# 7119 - 018 - 900

DEFERRED APPROVALS

1. PERIMETER HIGH SECURITY FENCE, ACCESSIBLE SWING MAN-GATES, PEDESTRIAN & MOTORIZED VEHICLE GATES SYSTEMS.

SEPARATE PERMITS REQUIRED

VICINITY MAP

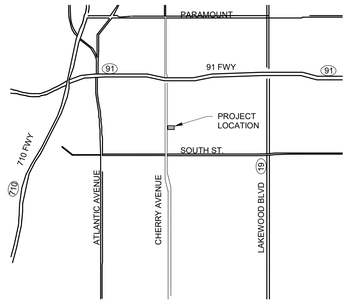

SHEET INDEX

TOTAL SHEETS: 29

GENERAL
G1.00 COVER SHEET
G1.01 GENERAL NOTES AND LEGENDS
01 - GENERAL: 2

TOPO SURVEY
1 SHEET 1 OF 6 (FOR REFERENCE ONLY)
2 SHEET 2 OF 6 (FOR REFERENCE ONLY)
3 SHEET 3 OF 6 (FOR REFERENCE ONLY)
4 SHEET 4 OF 6 (FOR REFERENCE ONLY)
5 SHEET 5 OF 6 (FOR REFERENCE ONLY)
6 SHEET 6 OF 6 (FOR REFERENCE ONLY)
02 - SURVEY: 6

CIVIL
C1.01 GENERAL NOTES
C1.02 DEMOLITION PLAN
C1.03 PAVEMENT PLAN
C1.04 STRIPING PLAN
C2.01 GRADING PLAN
C4.01 DETAILS
C4.02 DETAILS
C4.03 DETAILS
03-CIVIL: 8

ARCHITECTURAL
A1.02 SITE PLAN
A1.03 ENLARGED SITE PLANS
A1.04 ELEVATIONS, SECTIONS & DETAILS
A1.05 SIGNAGE NOTES & DETAILS
04 - ARCHITECTURAL: 4

ELECTRICAL
E1.1 ELECTRICAL FRONT SHEET
E1.2 ELECTRICAL SINGLE LINE DIAGRAM, PANEL SCHEDULES AND LOAD CALCULATION
E1.3 ELECTRICAL LIGHT FIXTURE SCHEDULE
E2.1 ELECTRICAL SITE LIGHTING, POWER AND ACCESS PLAN
E2.2 ELECTRICAL POWER AND ACCESS FLOOR PLAN
E3.1 ELECTRICAL SITE PHOTOMETRIC CALCULATIONS
E4.1 ELECTRICAL TITLE-24 COMPLIANCE FORMS - OUTDOOR
E4.2 ELECTRICAL LIGHTING CONTROL DIAGRAM
E5.1 ELECTRICAL DETAILS
06 - ELECTRICAL: 9
Grand total: 29

"FOR BID PURPOSE ONLY"
NOT FOR CONSTRUCTION

PROJECT TEAM

OWNER: LOS ANGELES COUNTY PUBLIC WORKS
900 S. FREMONT AVE., 5TH FLOOR,
ALHAMBRA, CA 91802-1460

CONTACT: HANNA KANG, P.E.
CAPITAL PROJECT MANAGEMENT - PMD I
hkang@dpw.lacounty.gov
(626) 300-2337

ARCHITECT: LCDG 626-351-4301
630 N. Rosemead Blvd, Ste 400
Pasadena CA, 91107

CONTACT: KEVIN O'BRIEN, AIA, PRINCIPAL IN CHARGE x102
kobrien@lcdg.com

CIVIL: BARBARA L. HALL, P.E. 626-256-3220
318 West Evergreen Avenue
Monrovia CA, 91016

CONTACT: BARBARA L. HALL, CIVIL ENGINEER
barbara_hall@blhallinc.com

MEP ENGINEERING:
BUDLONG & ASSOCIATES 818-638-8780
315 Arden Ave., Ste 23
Los Angeles CA, 90071

ELECTRICAL:

CONTACT: VICENTE DIAMZON, SR. ELECTRICAL ENGINEER
vic@budlong.com

LCDG
La Cañada Design Group
Architecture
Planning
Interiors

630 N. Rosemead Boulevard, Suite 400
Pasadena, California 91107
(626) 351-4301 FAX (626)351-4302
www.lcdg.com

Registration

Client Name

COUNTY OF LOS ANGELES PUBLIC WORKS

Project Title

DEPARTMENT OF ANIMAL CARE AND CONTROL HEADQUARTERS FENCING PROJECT

Project Address

5898 Cherry Ave
Long Beach, CA 90805

SPEC #: 7856

INTERIM REVIEW DOCUMENTS

Interim review documents are incomplete and not to be used for regulatory approval, permit, or construction.

NOT FOR CONSTRUCTION

La Cañada Design Group expressly reserves its common law copyright and other property rights in these plans. These plans are not to be reproduced, changed or copied in any form or manner whatsoever, nor are they to be assigned to a third party without first obtaining the written permission and consent of La Cañada Design Group. The owner agrees to hold harmless and indemnify La Cañada Design Group against all damages, claims and losses arising out of any reuse of the plans and specifications without the authorization of La Cañada Design Group.

Milestones	Date
CD 50%	9/25/23
CD 90%	1/9/24
BACK CHECK 1	7/2/24

Revisions

No.	Description	Date

Drawn by EH

Reviewed by RL

Plot date: 7/2/2024 10:41:04 AM

LCDG Job Number: 646.31

Sheet Title

COVER SHEET

Sheet Number

G1.00

GENERAL NOTES

I - GENERAL CONDITIONS

I - 1. IT SHALL BE THE SOLE RESPONSIBILITY OF THE CONTRACTOR TO REVIEW THE PLANS AND COORDINATE THE WORK PRIOR TO THE COMMENCEMENT OF ANY PORTION OF THE WORK.

I - 2. THE WORK IS DESCRIBED IN THE CONTRACT DOCUMENTS WHICH ARE COMPRISED OF THE DRAWINGS AND THE SPECIFICATIONS TOGETHER. THE DRAWINGS AND THE SPECIFICATIONS ARE COMPLIMENTARY. IN CASE OF CONFLICT BETWEEN DRAWINGS AND SPECIFICATIONS, THE ARCHITECT WILL MAKE A DOCUMENTED INTERPRETATION.

I - 3. THE CONTRACTOR IS THE PERSON OR ENTITY IDENTIFIED AS SUCH IN THE OWNER/CONTRACTOR AGREEMENT AND IS REFERRED TO THROUGHOUT THE CONTRACT DOCUMENTS AS IF SINGULAR IN NUMBER AND MASCULINE IN GENDER. THE TERM CONTRACTOR MEANS THE CONTRACTOR, HIS AUTHORIZED REPRESENTATIVE, AND/OR HIS SUB-CONTRACTORS.

I - 4. THE CONTRACTOR SHALL BE SOLELY AND COMPLETELY RESPONSIBLE FOR CONDITIONS OF THE PROJECT ON WHICH THE WORK IS PERFORMED AND FOR THE SAFETY OF ALL PERSONS AND/OR PROPERTY DURING THE PERFORMANCE OF THE CONTRACT.

I - 5. PROTECT ALL WORK, MATERIALS AND EQUIPMENT FROM DAMAGE FROM ANY CAUSE WHATSOEVER INCLUDING INCLEMENT WEATHER.

I - 6. PROVIDE ADEQUATE AND PROPER STORAGE FACILITIES DURING THE PROGRESS OF THE WORK.

I - 7. CONTRACTOR SHALL PROVIDE AND MAINTAIN TEMPORARY SIGNAGE AROUND EXTERIOR OF THE TEMPORARY FENCE INDICATING THAT THE SITE ACCESS IS RESTRICTED TO CONSTRUCTION WORKERS ONLY.

I - 8. GENERAL CONTRACTOR MUST PROVIDE TEMPORARY TOILETS FOR ALL WORKERS ON THE SITE AND EGULARLY MAINTAIN CLEANLINESS THROUGHOUT THE DURATION OF THE PROJECT.

I - 9. PORTIONS OF THE CONTRACT DOCUMENTS MAY DELEGATE THE DESIGN OF CERTAIN ITEMS TO THE CONTRACTOR, OR MAY OTHERWISE SPECIFY "DELEGATED DESIGN REQUIREMENTS" AND SIMILAR TERMS. THE CONTRACTOR IS PROFESSIONALLY LIABLE FOR DELEGATED DESIGN WORK, INCLUDING DESIGN, ENGINEERING, FABRICATION, INSTALLATION, AND CONFORMANCE TO ALL SPECIFIED PERFORMANCE REQUIREMENTS.

I - 10. SUBMITTAL: GENERAL CONTRACTOR SHALL REVIEW FOR COMPLETENESS AND COMPLIANCE WITH CONTRACT DOCUMENTS PRIOR TO SUBMISSION TO ARCHITECT. SUBMIT PRIOR TO FABRICATION. SUBMITTAL REVIEW BY ARCHITECT (AND/OR CONSULTANT ENGINEERS) IS FOR GENERAL CONFORMANCE WITH DESIGN INTENT AND DOES NOT CONSTITUTE AN AUTHORIZATION TO DEVIATE FROM TERMS AND CONDITIONS OF CONTRACT. WHEN INDICATED, PROVIDE A PROFESSIONAL ENGINEER'S SIGNATURE AND SEAL APPLICABLE TO STATE WHERE PROJECT IS LOCATED. MAINTAIN AT SITE A COPY OF REVIEWED AND ACCEPTED SUBMITTALS. ARCHITECT REQUIRES 10 WORKING DAYS FROM RECEIPT OF SUBMITTAL FOR COMPLETION OF REVIEW.

I - 11. MODFICATIONS AND SUBSTITUTIONS: MUST BE ACCEPTED IN WRITING BY THE ARCHITECT. NO MODIFICATION OR SUBSTITUTION WILL BE ACCEPTED VIA SHOP DRAWING REVIEW.

I - 12. CONSTRUCTION MEANS AND METHODS: NOT A PART OF CONTRACT DOCUMENTS. PERFORM CONSTRUCTION MEANS, METHODS, TECHNIQUES, SEQUENCES, AND PROCEDURES COMPLYING WITH NATIONAL, STATE AND LOCAL SAFETY ORDINANCES. SITE VISITS BY ARCHITECT AND/OR CONSULTANT ENGINEERS (INCLUDING STRUCTURAL OBSERVATION) DO NOT CONSTITUTE SUPERVISION OF CONSTRUCTION MEANS AND METHODS. ALL SHORING SHALL BE DESIGNED AND SEALED BY A REGISTERED CIVIL ENGINEER LICENSED IN THE STATE OF CALIFORNIA.

I - 13. PERMITS AND A COMPLETE SET OF APPROVED DRAWINGS ARE TO BE KEPT ONSITE AT ALL TIMES.

I - 14. THE CONTRACTOR SHALL VERIFY ON SITE ALL DIMENSIONS AND LOCATION OF ANY UNDERGROUND UTILITY.

I - 15. CALL BEFORE YOU DIG - 811 DIG ALERT UNDERGROUND SERVICE ALERT.

II - CODE COMPLIANCE

II - 1. ALL WORK SHALL CONFORM TO TITLE 24, CALIFORNIA CODE OF REGULATIONS (CCR).

II - 2. BUILDING CONSTRUCTION IS DESIGNED TO CONFORM TO THE REQUIREMENTS OF THE CBC 2022 EDITION, THE CALIFORNIA ADMINISTRATIVE CODE, TITLE 24, STATE FIRE MARSHAL, CAL-OSHA, REGULATIONS FOR THE ACCOMMODATION OF THE PHYSICALLY HANDICAPPED, AND MUNICIPAL, STATE OR FEDERAL ORDINANCES, CODES AND/OR REGULATIONS.

II - 3. ALL INTERIOR FINISHES SHALL CONFORM TO THE STATE FIRE MARSHALL FLAME SPREAD RATING REQUIREMENTS AND CBC CHAPTER 8.

II - 4. ALL FLOOR SURFACES IN PUBLIC AREAS SHALL BE NON-SLIP IN COMPLIANCE WITH DIVISION 18 OF THE HEALTH AND SAFETY CODE OF THE STATE OF CALIFORNIA.

II - 5. EXIT DOORS:
A. EXIT DOORS SHALL BE OPERABLE FROM THE INSIDE WITHOUT THE USE OF KEY OR ANY SPECIAL KNOWLEDGE OR EFFORT.

B. MAXIMUM EFFORT TO OPERABLE DOORS SHALL BE NOT EXCEED 8-1/2 POUNDS FOR EXTERIOR DOORS AND 5 POUNDS FOR INTERIOR DOORS, SUCH PULL OR PUSH EFFORT BEING APPLIED AT RIGHT ANGLES TO HINGED DOORS AND AT THE CENTER PLANE OF SLIDING OR FOLDING DOORS. COMPENSATING DEVICES OR AUTOMATIC DOOR OPERATORS MAY BE UTILIZED TO MEET THE ABOVE STANDARDS. WHEN FIRE DOORS ARE REQUIRED, THE MAXIMUM EFFORT TO OPERATE THE DOOR MAY BE INCREASED NOT TO EXCEED 15 POUNDS.

II - 6. PENETRATIONS THROUGH RATED WALLS AND FLOORS SHALL BE SEALED WITH A MATERIAL CAPABLE OF PREVENTING THE PASSAGE OF FLAMES AND HOT GASES WHEN SUBJECTED TO THE REQUIREMENTS OF THE TEST STANDARD SPECIFIC FOR FIRE STOPS ASTM E814. SEE SPECIFICATION REQUIREMENTS.

II - 7. ALL DUCT PENETRATIONS THROUGH FIRE RATED WALLS SHALL BE PROVIDED WITH APPROVED FIRE DAMPERS.

II - 8. COORDINATE ALL UNDERGROUND UTILITIES WITH COLUMN FOOTINGS AND BUILDING FOOTING. PENETRATION OF PIPES, CONDUITS, DUCT, ETC. IN BUILDING ELEMENTS REQUIRING PROTECTED OPENINGS PER CHAPTER 7 SHALL BE A TESTED ASSEMBLY APPROVED BY THE STATE FIRE MARSHAL & COMPLY WITH UBC STANDARD #7-1. SUBMIT SHOP DRAWINGS DETAILS FURNISHED BY THE MANUFACTURER OF THE FIRE STOP MATERIAL WHICH CONFORMANCE AND SHALL BE SPECIFIED FOR EACH PENETRATION WITH ALL VARIABLES DEFINED. THESE FINAL AND APPROVED DRAWINGS SHALL BE READILY AVAILABLE TO THE DISTRICT INSPECTOR AT ALL TIMES AT THE PROJECT SITE.

II - 9. TOILET ROOMS SHALL BE PROVIDED WITH ONE (1) COMPLETE AIR CHANGE EVERY FIVE (5) MINUTES; TWELVE (12) PER HOUR.

III - CONSTRUCTION REQUIREMENTS

III - 1. ALL GYPSUM BOARD SHALL BE TYPE 'X' FIRE RESISTANT.

III - 2. PROVIDE ALL NECESSARY BLOCKING, BACKING PLATES, FRAMING, SUPPORTS AND ANCHORING DEVICES AS REQUIRED FOR THE INSTALLATION OF LIGHT FIXTURES, ELECTRICAL UNITS, MECHANICAL EQUIPMENT, TOILET ACCESSORIES AND SPECIAL EQUIPMENT.

III - 3. PROVIDE PROPER SLEEVING AND CAULKING TO ALL PLUMBING AND ELECTRICAL CONDUITS AND PIPES PASSING THROUGH SLAB ON GRADE AND CONCRETE OR MASONRY WALLS.

III - 4. PATCH AND REPAIR ALL SURFACES DAMAGED DURING CONSTRUCTION OR DEMOLITION. MATCH EXISTING FINISHES.

III - 5. UNLESS OTHERWISE INDICATED, SLOPE FINISH GRADE AWAY FROM BUILDING AT 1/4" PER FT.

III - 6. MINIMUM THICKNESS OF UNREINFORCED CONC. WALKS AND SLABS IS 4". PROVIDE CONTROL JOINTS AS SHOWN. WHERE CONTROL JOINTS ARE NOT SHOWN PROVIDE JOINTS IN SQUARES SAME WIDTH OF WALK. PROVIDE COLD JOINTS IN CONCRETE PAVED AREAS WHERE SHOWN OR AT MAXIMUM SPACING OF 20'-0", SEE SPECS. EXTERIOR SLAB AND WALKS SHALL HAVE EXPANSION JOINTS ONLY WHERE SHOWN ON DRAWINGS. CONCRETE CURBS SHALL HAVE EXPANSION JOINTS AT 40'-0" O.C. MAX AND ALIGNED WITH WALK CONSTRUCTION JOINTS TYPICALLY.

III - 7. FIELD VERIFY THE EXACT LOCATION OF BELOW GROUND PIPING AND UTILITIES IN THE IMMEDIATE VICINITY OF THE WORK, WHETHER SHOWN ON DRAWINGS OR NOT. MARK ALL EXISTING PIPING AND UTILITIES AFFECTED BY THE WORK USING AN UNDERGROUND PIPE LOCATOR TO LOCATE POSITION OF PIPES AND CONDUITS AND BY SPRAY PAINTING OF PIPES AND CONDUITS ON THE SURFACE. THE CONTRACTOR SHALL ADD THE EXISTING UNDERGROUND UTILITIES FOUND DURING BLUESTAKING TO DRAWINGS FOR RECORD. CONTRACTOR SHALL RESPONSIBLE FOR ANY DAMAGE THAT MIGHT BE OCCASIONED BY THE CONTRACTOR'S FAILURE TO EXACTLY LOCATE ANY AND ALL UNDERGROUND UTILITIES.

III - 8. FOR CABINETS THAT REQUIRED LOCKS, ALL SUCH LOCKS SHALL BE KEYED ALIKE.

IV - DRAWINGS

IV - 1. THE INFORMATION CONTAINED WITHIN THE CONTRACT DOCUMENT SET IS GIVEN SO AS TO ADEQUATELY CONVEY THE DESIGN INTENT. IT IS NOT MEANT TO BE EXHAUSTIVE IN SCOPE OR TOTALLY COMPREHENSIVE IN DETAIL NOR IS IT MEANT TO BE ALL INCLUSIVE OF THE MATERIALS/LABOR TO PRODUCE THE JOB AS INTENDED. PROMPTLY NOTIFY THE ARCHITECT PRIOR TO PROCEEDING WITH WORK, IF DESIGN INTENT REQUIRES FURTHER CLARIFICATION.

IV - 2. ALL DRAWINGS, NOTES, SYMBOLS, ETC. WITHIN THE CONTRACT DOCUMENT SET ARE INTENDED TO CONVEY THE DESIGN INTENT. NO DRAWING, NOTE, SYMBOL, ETC. SHALL SUPERSEDE ANOTHER. ALL CONFLICTS THAT ARISE SHALL BE REPORTED IN WRITING TO THE ARCHITECT FOR CLARIFICATION/ RESOLUTION WITHIN THE DESIGN INTENT.

IV - 3. ALL WORK IS TO BE CONSIDERED NEW UNLESS NOTED AS (E), EXISTING, SALVAGE OR RELOCATE.

IV - 4. REFER TO STRUCTURAL, MECHANICAL, PLUMBING AND ELECTRICAL DRAWINGS FOR ADDITIONAL NOTES AND REQUIREMENTS.

IV - 5. WRITTEN DIMENSIONS TAKE PRECEDENCE OVER SCALED DIMENSIONS.

IV - 6. VERIFY DIMENSIONS AND LOCATIONS OF ALL OPENINGS, BASES AND SPECIAL PROVISIONS REQUIRED FOR EQUIPMENT, PLUMBING FIXTURES, DUCTS, PIPING, CONDUIT, FINISH HARDWARE, ETC.

IV - 7. ALL WALL DIMENSIONS ARE TO FACE OF STUD (FOS). ALL CLEAR DIMENSIONS (EXTERIOR AND INTERIOR) ARE FROM FACE OF FINISH (FOF) TO FACE OF FINISH (FOF), U.N.O.

IV - 8. FINISH FLOOR ELEVATIONS REFER TO: TOP OF CONCRETE SLAB UNDER CARPET OR RESILIENT FLOORING OR WHERE EXPOSED AT FIRST LEVEL AND TOP OF LIGHTWEIGHT CONCRETE TOPPING AT SECOND LEVEL. TOP OF CERAMIC TILE SET AT +1/4" ABOVE FINISH CONCRETE SLAB.

IV - 9. TYPICAL DETAILS: DETAILS TITLED AS 'TYPICAL' ARE APPLICABLE THROUGHOUT PROJECT AND MAY NOT BE SPECIFICALLY REFERENCED HEREIN. CONTRACTOR IS RESPONSIBLE FOR IDENTIFYING THESE DETAILS AND UNDERSTANDING EXTENT OF THEIR APPLICATION PRIOR TO PERFORMING THE WORK.

DEMOLITION NOTES

1. WORK INCLUDES THE SELECTIVE DEMOLITION, REMOVAL, AND DISPOSAL OF REMOVED MATERIALS AS SHOWN IN DRAWINGS TO OBTAIN DESIRED DESIGN INTENT.
2. ITEMS TO BE REMOVED SHALL BE REMOVED IN THEIR ENTIRETY. ITEMS TO BE DEMOLISHED SHALL BE DEMOLISHED TO THE EXTENT REQUIRED TO FACILITATE NEW WORK. ALL DEMOLISHED MATERIALS SHALL BE REMOVED FROM SITE.
3. PROPERLY STORE AND PROTECT ALL SALVAGED ITEMS FOR LATER REINSTALLATION.
4. REMOVED ITEMS MAY BE COATED WITH LEAD CONTAINING PAINT.
5. AT JUNCTURE OF WORK TO REMAIN AND WORK DEMOLISHED, MAKE STRAIGHT, PLUMB, EVEN CUTS.
6. UTILITIES, PIPING AND SERVICES TO BE PROPERLY DISCONNECTED AND CAPPED OR RELOCATED AS REQUIRED. VERIFY REQUIREMENTS WITH UTILITY COMPANIES AND CODE REQUIREMENTS. REFER TO MECHANICAL, PLUMBING AND ELECTRICAL DRAWINGS FOR ADDITIONAL REMOVAL AND DEMOLITION INFORMATION.
7. HAVE EMERGENCY SHUT-OFF PROCEDURES IN PLACE PRIOR TO START OF DEMOLITION. THE GENERAL CONTRACTOR AND ALL SUBCONTRACTORS SHALL FAMILIARIZE THEMSELVES WITH ALL SHUT-OFF VALVE LOCATIONS ON SITE AND HAVE PROPER TOOLS READILY AVAILABLE TO OPERATE VALVES.
8. PROTECT ALL EXISTING WORK TO REMAIN. PREVENT DAMAGE TO BUILDING STRUCTURE, STEEL FIREPROOFING, BUILDING UTILITY LINES, ETC. PROTECT ADJACENT CONSTRUCTION AND AREAS FROM DUST, DEBRIS AND DAMAGE. PROVIDE AIR TIGHT DUST SHIELD.
9. WHERE WALL IS REMOVED, CAP OFF AND CONCEAL AFFECTED UTILITIES WITHIN REMAINING WALL CAVITY. PROVIDE ADDITIONAL FRAMING AND FINISH MATERIAL TO ACCOMMODATE THE PORTION OF WALL TO REMAIN. PATCH AND REPAIR ADJACENT WALL, FLOOR AND CEILING FINISHES TO MATCH SURFACE, TEXTURE AND COLOR.
10. ABANDONED FLOOR AND WALL PENETRATIONS ARE TO BE CAPPED OFF AND PATCHED TO MATCH SURFACE, TEXTURE AND COLOR OF ADJACENT SURFACES.
11. AT COMPLETION OF DEMOLITION LEAVE SPACES AND SURFACES BROOM CLEAN AND FREE OF DEMOLISHED MATERIALS.

SYMBOL LEGEND

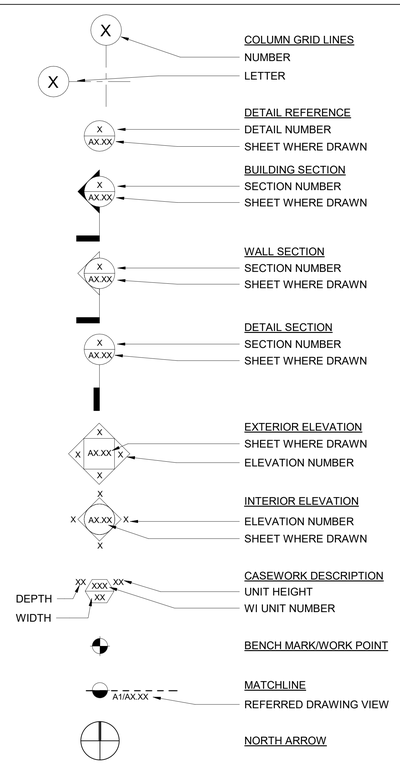

DEMOLITION PLAN LEGEND

FLOOR PLAN LEGEND

APPLICABLE CODES

ALL WORK PERTAINING TO AND ALL MATERIALS SUPPLIED FOR EXECUTING AND COMPLETING THIS CONTRACT SHALL COMPLY WITH PROVISIONS SPECIFIED IN THE CONTRACT DOCUMENTS AND WITH ALL APPLICABLE LAWS, REGULATIONS AND ORDINANCES GOVERNING WORK INCLUDING, BUT NOT NECESSARILY LIMITED TO THOSE OF:

2022 CALIFORNIA ADMINISTRATIVE CODE (CAC)
2022 CALIFORNIA BUILDING CODE (CBC)
2022 CALIFORNIA MECHANICAL CODE (CMC)
2022 CALIFORNIA PLUMBING CODE (CPC)
2022 CALIFORNIA ELECTRICAL CODE (CEC)
2022 CALIFORNIA ENERGY CODE, TITLE 24, PART 6 C.C.R.
2022 CALIFORNIA ENERGY STANDARDS, TITLE 24
2022 CALIFORNIA GREEN BUILDING CODE (CGBC)
2022 CALIFORNIA FIRE CODE (CFC)
2022 CALIFORNIA REFERNCED STANDARDS CODE (CRSC)

NFPA 13 AUTOMATIC SPRINKLER SYSTEMS, 2016 EDITION
NFPA 14 STANDPIPE SYSTEMS, 2016 EDITION
NFPA 20 STATIONARY PUMPS, 2016 EDITION
NFPA 24 PRIVATE FIRE MAIN, 2016 EDITION
NFPA 72 NATIONAL FIRE ALARM CODE, (CALIFORNIA AMENDED), 2016 EDITION
NFPA 253 CRITICAL RADIANT FLUX OF FLOOR COVERINGS, 2015 EDITION
NFPA 2001 CLEAN AGENT FIRE EXTINGUISHING SYSTEMS, 2018 EDITION
AMERICANS WITH DISABILITIES ACT (ADA)

ALL APPLICABLE CODES OF THE CITY OF LONG BEACH AND THE COUNTY OF LOS ANGELES.

REFLECTED CEILING PLAN LEGEND

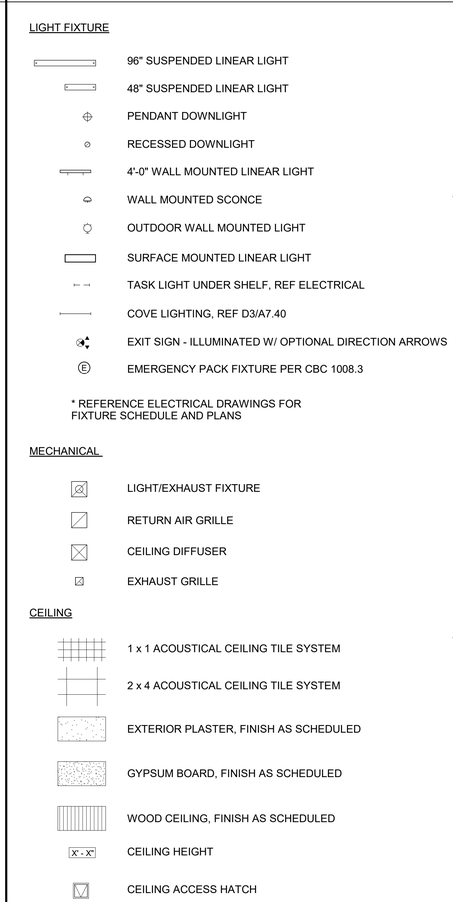

LCDG
La Cañada Design Group
Architecture
Planning
Interiors

630 N. Rosemead Boulevard, Suite 400
Pasadena, California 91107
(626) 351-4301 FAX (626)351-4302
www.lcdg.com

Registration

Client Name
COUNTY OF LOS ANGELES PUBLIC WORKS

Project Title
DEPARTMENT OF ANIMAL CARE AND CONTROL HEADQUARTERS FENCING PROJECT

Project Address
5898 Cherry Ave
Long Beach, CA 90805

SPEC #: 7856

INTERIM REVIEW DOCUMENTS

Interim review documents are incomplete and not to be used for regulatory approval, permit, or construction.

NOT FOR CONSTRUCTION

La Cañada Design Group expressly reserves its common law copyright and other property rights in these plans. These plans are not to be reproduced, changed or copied in any form or manner whatsoever, nor are they to be assigned to a third party without first obtaining the written permission and consent of La Cañada Design Group. The owner agrees to hold harmless and indemnify La Cañada Design Group against all damages, claims and losses arising out of any reuse of the plans and specifications without the authorization of La Cañada Design Group.

Milestones	Date
CD 50%	9/25/23
CD 90%	1/9/24
BACK CHECK 1	7/2/24

Revisions

No.	Description	Date

Drawn by EH
Reviewed by RL

Plot date: 7/2/2024 10:41:04 AM

LCDG Job Number: 646.31

Sheet Title
GENERAL NOTES AND LEGENDS

Sheet Number
G1.01

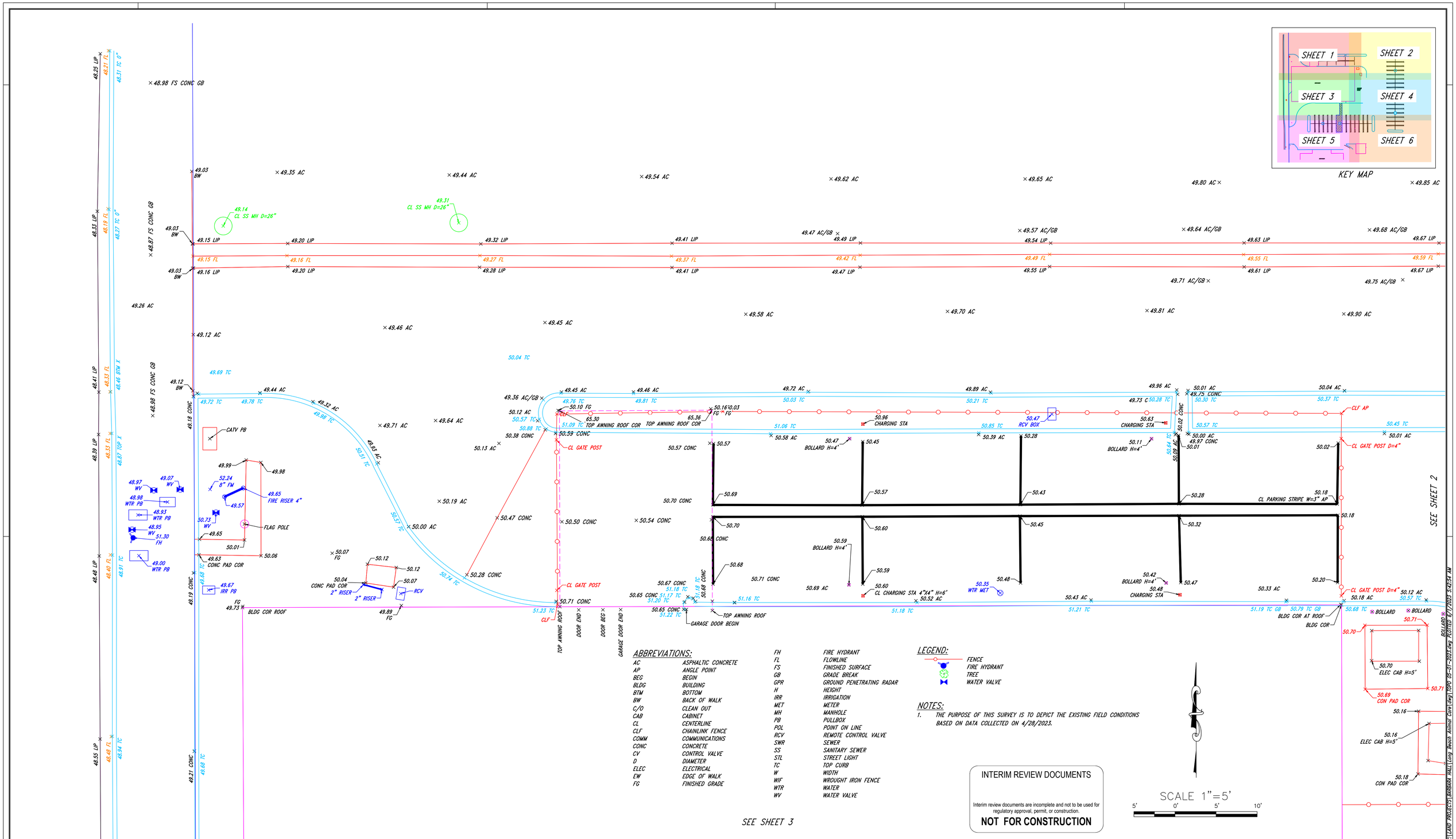

ABBREVIATIONS:

AC	ASPHALTIC CONCRETE
AP	ANGLE POINT
BEG	BEGIN
BLDG	BUILDING
BTM	BOTTOM
BW	BACK OF WALK
C/O	CLEAN OUT
CAB	CABINET
CL	CENTERLINE
CLF	CHAINLINK FENCE
COMM	COMMUNICATIONS
CONC	CONCRETE
CV	CONTROL VALVE
D	DIAMETER
ELEC	ELECTRICAL
EW	EDGE OF WALK
FG	FINISHED GRADE
FH	FIRE HYDRANT
FL	FLOWLINE
FS	FINISHED SURFACE
GB	GRADE BREAK
GPR	GROUND PENETRATING RADAR
H	HEIGHT
IRR	IRRIGATION
MET	METER
MH	MANHOLE
PB	PULLBOX
POL	POINT ON LINE
RCV	REMOTE CONTROL VALVE
SWR	SEWER
SS	SANITARY SEWER
STL	STREET LIGHT
TC	TOP CURB
W	WIDTH
WIF	WROUGHT IRON FENCE
WTR	WATER
WV	WATER VALVE

LEGEND:

- FENCE
- FIRE HYDRANT
- TREE
- WATER VALVE

NOTES:

1. THE PURPOSE OF THIS SURVEY IS TO DEPICT THE EXISTING FIELD CONDITIONS BASED ON DATA COLLECTED ON 4/28/2023.

SCALE 1"=5'

5' 0' 5' 10'

INTERIM REVIEW DOCUMENTS

Interim review documents are incomplete and not to be used for regulatory approval, permit, or construction.

NOT FOR CONSTRUCTION

PREPARED BY:

LICENSED LAND SURVEYOR

BILL CARR SURVEYS

(714) 978-3889
755 DEBRA LANE
ANAHEIM, CA 92805

Jeff C. Clark

(ELECTRONICALLY SIGNED 5/31/2023)
JEFF C. CLARK P.L.S. 8671
EXP. DATE: 12-31-2023

PROFESSIONAL LAND SURVEYOR
JEFF CARLETON CLARK
No. 8671
EXP 12-31-23
STATE OF CALIFORNIA

BENCH MARK: CITY OF LONG BEACH BENCHMARK NO. 1029
ELEVATION = 48.646 (NGVD 29, 1985 ADJUSTMENT)

BASIS OF BEARINGS:

PREPARED FOR:

BARBARA HALL, P.E.
L.A. COUNTY ANIMAL CARE HEADQUARTERS
5898 CHERRY AVE
LONG BEACH, CA 90805

NO.	BY:	REVISION

CHECKED BY:	JC
DRAWN BY:	SPD
SURVEY CREW:	AG/EM
DATE OF SURVEY:	4/28/2023
DATE OF PLOT:	5/31/2023
COORDINATE FILE:	********.ASC
SCALE:	1" = 5 FEET
SHEET	1 OF 6 SHEETS

Y:\LAND PROJECTS\BARBARA HALL\Long Beach Animal Care.dwg\DWG 05-01-2023.dwg PLOTTED 5/31/2023 3:42:54 AM BOLLARD

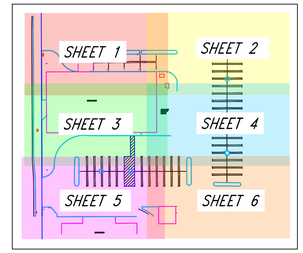

KEY MAP

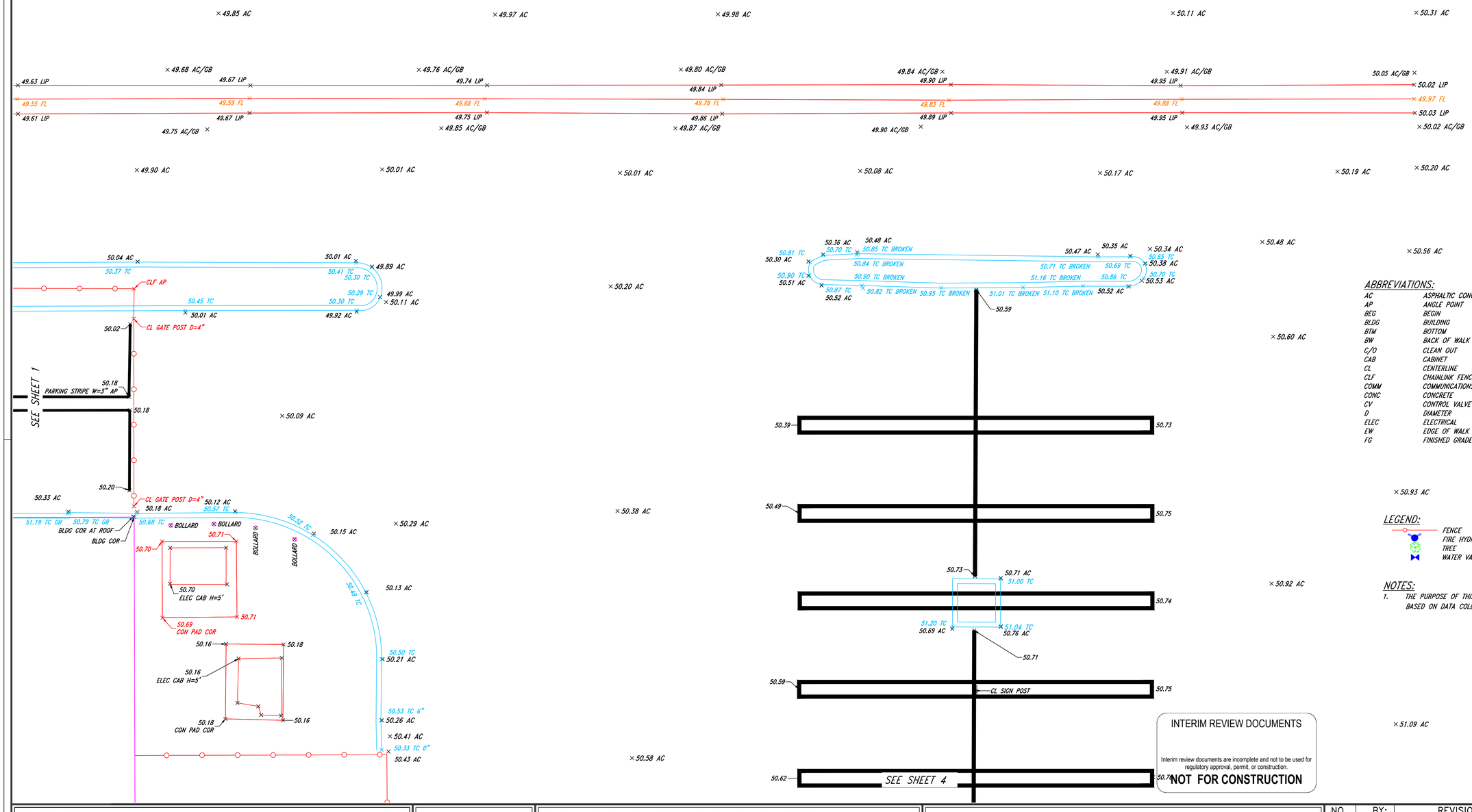

ABBREVIATIONS:

AC	ASPHALTIC CONCRETE	FH	FIRE HYDRANT
AP	ANGLE POINT	FL	FLOWLINE
BEG	BEGIN	FS	FINISHED SURFACE
BLDG	BUILDING	GB	GRADE BREAK
BTM	BOTTOM	GPR	GROUND PENETRATING RADAR
BW	BACK OF WALK	H	HEIGHT
C/O	CLEAN OUT	IRR	IRRIGATION
CAB	CABINET	MET	METER
CL	CENTERLINE	MH	MANHOLE
CLF	CHAINLINK FENCE	PB	PULLBOX
COMM	COMMUNICATIONS	POL	POINT ON LINE
CONC	CONCRETE	RCV	REMOTE CONTROL VALVE
CV	CONTROL VALVE	SWR	SEWER
D	DIAMETER	SS	SANITARY SEWER
ELEC	ELECTRICAL	STL	STREET LIGHT
EW	EDGE OF WALK	TC	TOP CURB
FG	FINISHED GRADE	W	WIDTH
		WIF	WROUGHT IRON FENCE
		WTR	WATER
		WV	WATER VALVE

LEGEND:

- FENCE
- FIRE HYDRANT
- TREE
- WATER VALVE

NOTES:

1. THE PURPOSE OF THIS SURVEY IS TO DEPICT THE EXISTING FIELD CONDITIONS BASED ON DATA COLLECTED ON 4/28/2023.

INTERIM REVIEW DOCUMENTS

Interim review documents are incomplete and not to be used for regulatory approval, permit, or construction.

NOT FOR CONSTRUCTION

SCALE 1"=5'

5' 0' 5' 10'

PREPARED BY:

LICENSED LAND SURVEYOR

BILL CARR SURVEYS

(714) 978-3889
755 DEBRA LANE
ANAHEIM, CA 92805

Jeff C. Clark

(ELECTRONICALLY SIGNED 5/31/2023)
JEFF C. CLARK P.L.S. 8671
EXP. DATE: 12-31-2023

PROFESSIONAL LAND SURVEYOR
JEFF CARLETON CLARK
No. 8671
EXP 12-31-23
STATE OF CALIFORNIA

BENCH MARK: CITY OF LONG BEACH BENCHMARK NO. 1029
ELEVATION = 48.646 (NGVD 29, 1985 ADJUSTMENT)

BASIS OF BEARINGS:

PREPARED FOR:

BARBARA HALL, P.E.
L.A. COUNTY ANIMAL CARE HEADQUARTERS
5898 CHERRY AVE
LONG BEACH, CA 90805

NO.	BY:	REVISION

CHECKED BY:	JC
DRAWN BY:	SPD
SURVEY CREW:	AG/EM
DATE OF SURVEY:	4/28/2023
DATE OF PLOT:	5/31/2023
COORDINATE FILE:	********.ASC
SCALE:	1" = 5 FEET
SHEET	2 OF 6 SHEETS

Y:\LAND PROJECTS\BARBARA HALL\Long Beach Animal Care\dwg\10PD 05-01-2023.dwg PLOTTED 5/31/2023 5:23:16 AM

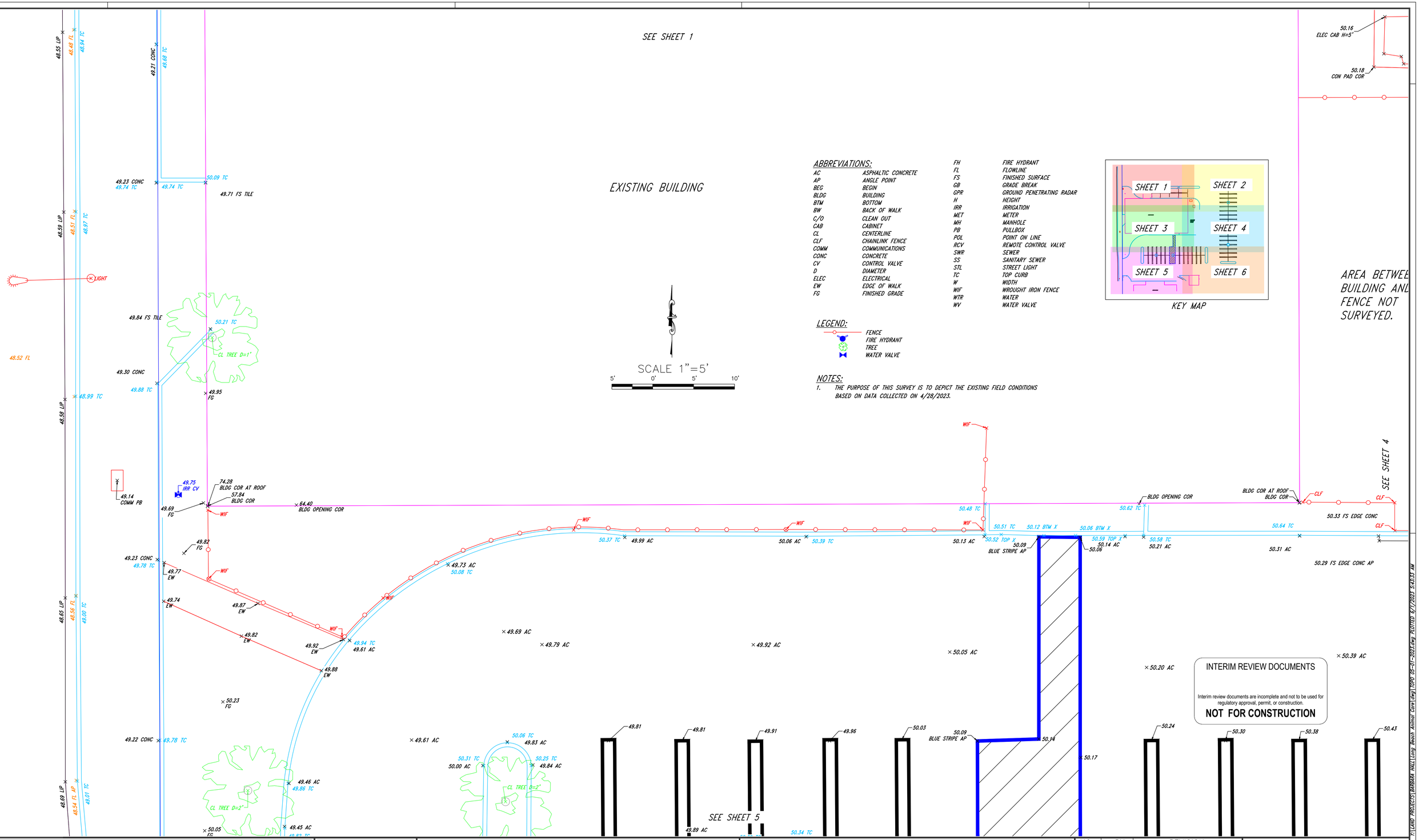

ABBREVIATIONS:

AC	ASPHALTIC CONCRETE
AP	ANGLE POINT
BEG	BEGIN
BLDG	BUILDING
BTM	BOTTOM
BW	BACK OF WALK
C/O	CLEAN OUT
CAB	CABINET
CL	CENTERLINE
CLF	CHAINLINK FENCE
COMM	COMMUNICATIONS
CONC	CONCRETE
CV	CONTROL VALVE
D	DIAMETER
ELEC	ELECTRICAL
EW	EDGE OF WALK
FG	FINISHED GRADE
FH	FIRE HYDRANT
FL	FLOWLINE
FS	FINISHED SURFACE
GB	GRADE BREAK
GPR	GROUND PENETRATING RADAR
H	HEIGHT
IRR	IRRIGATION
MET	METER
MH	MANHOLE
PB	PULLBOX
POL	POINT ON LINE
RCV	REMOTE CONTROL VALVE
SWR	SEWER
SS	SANITARY SEWER
STL	STREET LIGHT
TC	TOP CURB
W	WIDTH
WIF	WROUGHT IRON FENCE
WTR	WATER
WV	WATER VALVE

KEY MAP

LEGEND:

- FENCE
- FIRE HYDRANT
- TREE
- WATER VALVE

NOTES:

1. THE PURPOSE OF THIS SURVEY IS TO DEPICT THE EXISTING FIELD CONDITIONS BASED ON DATA COLLECTED ON 4/28/2023.

PREPARED BY:

BILL CARR SURVEYS
LICENSED LAND SURVEYOR
(714) 978-3889
755 DEBRA LANE
ANAHEIM, CA 92805

Jeff C. Clark
(ELECTRONICALLY SIGNED 5/31/2023)
JEFF C. CLARK P.L.S. 8671
EXP. DATE: 12-31-2023

PROFESSIONAL LAND SURVEYOR
JEFF CARLETON CLARK
No. 8671
EXP 12-31-23
STATE OF CALIFORNIA

BENCH MARK: CITY OF LONG BEACH BENCHMARK NO. 1029
ELEVATION = 48.646 (NGVD 29, 1985 ADJUSTMENT)

BASIS OF BEARINGS:

PREPARED FOR:
BARBARA HALL, P.E.
L.A. COUNTY ANIMAL CARE HEADQUARTERS
5898 CHERRY AVE
LONG BEACH, CA 90805

NO.	BY:	REVISION

CHECKED BY:	JC
DRAWN BY:	SPD
SURVEY CREW:	AG/EM
DATE OF SURVEY:	4/28/2023
DATE OF PLOT:	5/31/2023
COORDINATE FILE:	********.ASC
SCALE:	1" = 5 FEET
SHEET	3 OF 6 SHEETS

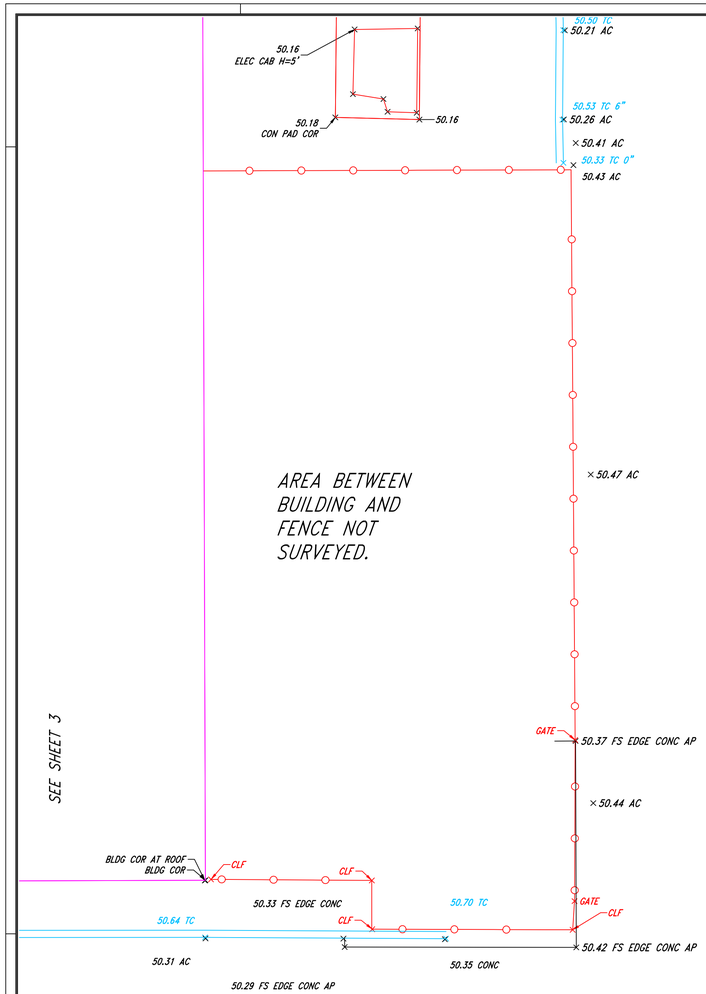

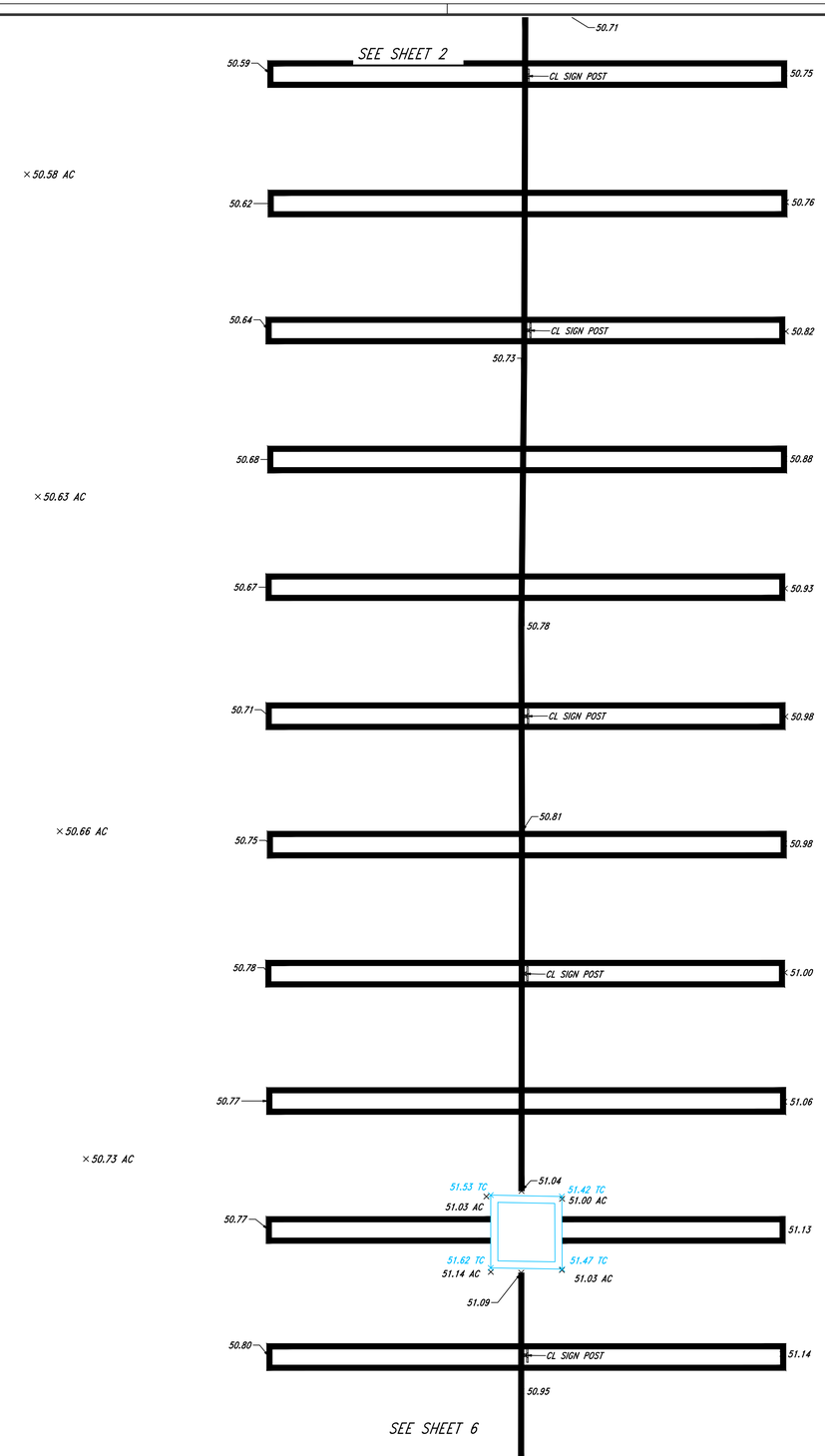

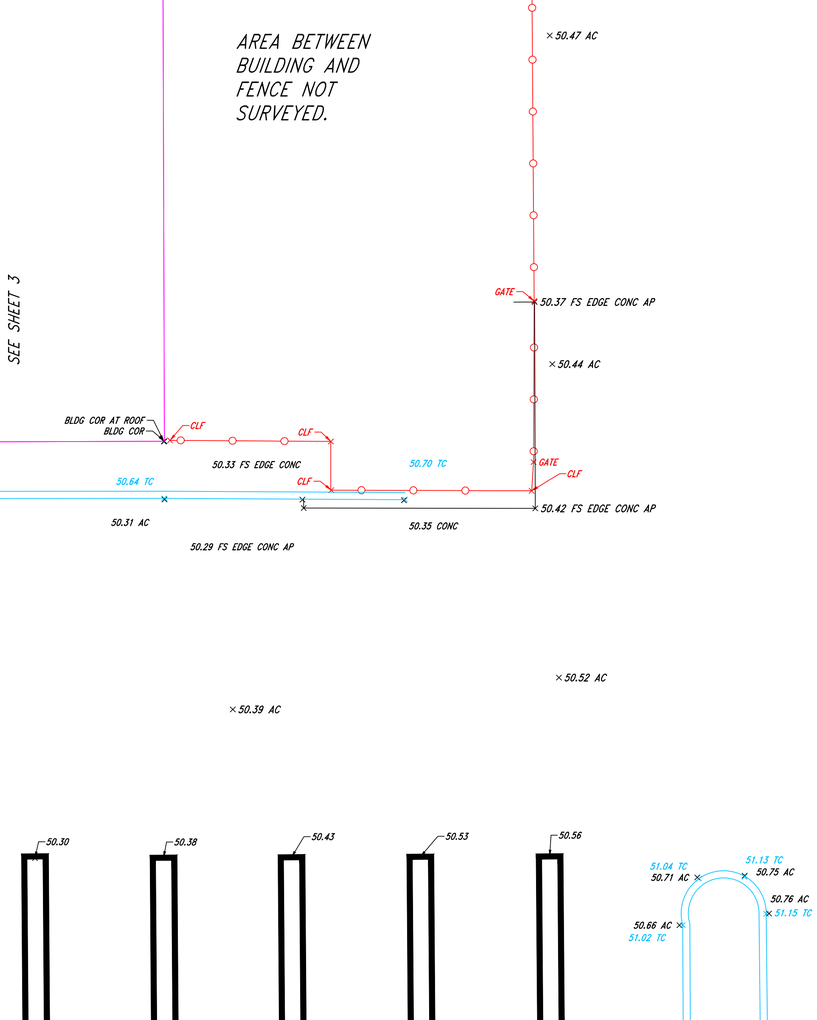

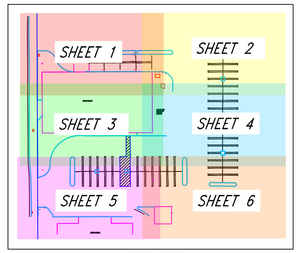

KEY MAP

ABBREVIATIONS:

AC	ASPHALTIC CONCRETE
AP	ANGLE POINT
BEG	BEGIN
BLDG	BUILDING
BTM	BOTTOM
BW	BACK OF WALK
C/O	CLEAN OUT
CAB	CABINET
CL	CENTERLINE
CLF	CHAINLINK FENCE
COMM	COMMUNICATIONS
CONC	CONCRETE
CV	CONTROL VALVE
D	DIAMETER
ELEC	ELECTRICAL
EW	EDGE OF WALK
FG	FINISHED GRADE
FH	FIRE HYDRANT
FL	FLOWLINE
FS	FINISHED SURFACE
GB	GRADE BREAK
GPR	GROUND PENETRATING RADAR
H	HEIGHT
IRR	IRRIGATION
MET	METER
MH	MANHOLE
PB	PULLBOX
POL	POINT ON LINE
RCV	REMOTE CONTROL VALVE
SWR	SEWER
SS	SANITARY SEWER
STL	STREET LIGHT
TC	TOP CURB
W	WIDTH
WIF	WROUGHT IRON FENCE
WTR	WATER
WV	WATER VALVE

LEGEND:

- FENCE
- FIRE HYDRANT
- TREE
- WATER VALVE

NOTES:

1. THE PURPOSE OF THIS SURVEY IS TO DEPICT THE EXISTING FIELD CONDITIONS BASED ON DATA COLLECTED ON 4/28/2023.

INTERIM REVIEW DOCUMENTS

Interim review documents are incomplete and not to be used for regulatory approval, permit, or construction.

NOT FOR CONSTRUCTION

SCALE 1"=5'

5' 0' 5' 10'

PREPARED BY:

BILL CARR SURVEYS
LICENSED LAND SURVEYOR
(714) 978-3889
755 DEBRA LANE
ANAHEIM, CA 92805

Jeff C. Clark
(ELECTRONICALLY SIGNED 5/31/2023)
JEFF C. CLARK P.L.S. 8671
EXP. DATE: 12-31-2023

PROFESSIONAL LAND SURVEYOR
JEFF CARLETON CLARK
No. 8671
EXP 12-31-23
STATE OF CALIFORNIA

BENCH MARK: CITY OF LONG BEACH BENCHMARK NO. 1029
ELEVATION = 48.646 (NGVD 29, 1985 ADJUSTMENT)

BASIS OF BEARINGS:

PREPARED FOR:

BARBARA HALL, P.E.
L.A. COUNTY ANIMAL CARE HEADQUARTERS
5898 CHERRY AVE
LONG BEACH, CA 90805

NO.	BY:	REVISION

CHECKED BY:	JC
DRAWN BY:	SPD
SURVEY CREW:	AG/EM
DATE OF SURVEY:	4/28/2023
DATE OF PLOT:	5/31/2023
COORDINATE FILE:	********.ASC
SCALE:	1" = 5 FEET
SHEET	4 OF 6 SHEETS

Y:\LAND PROJECTS\BARBARA HALL\Long Beach Animal Care\dwg\0190 05-01-2023.dwg PLOTTED 8/17/2023 5:44:41 AM

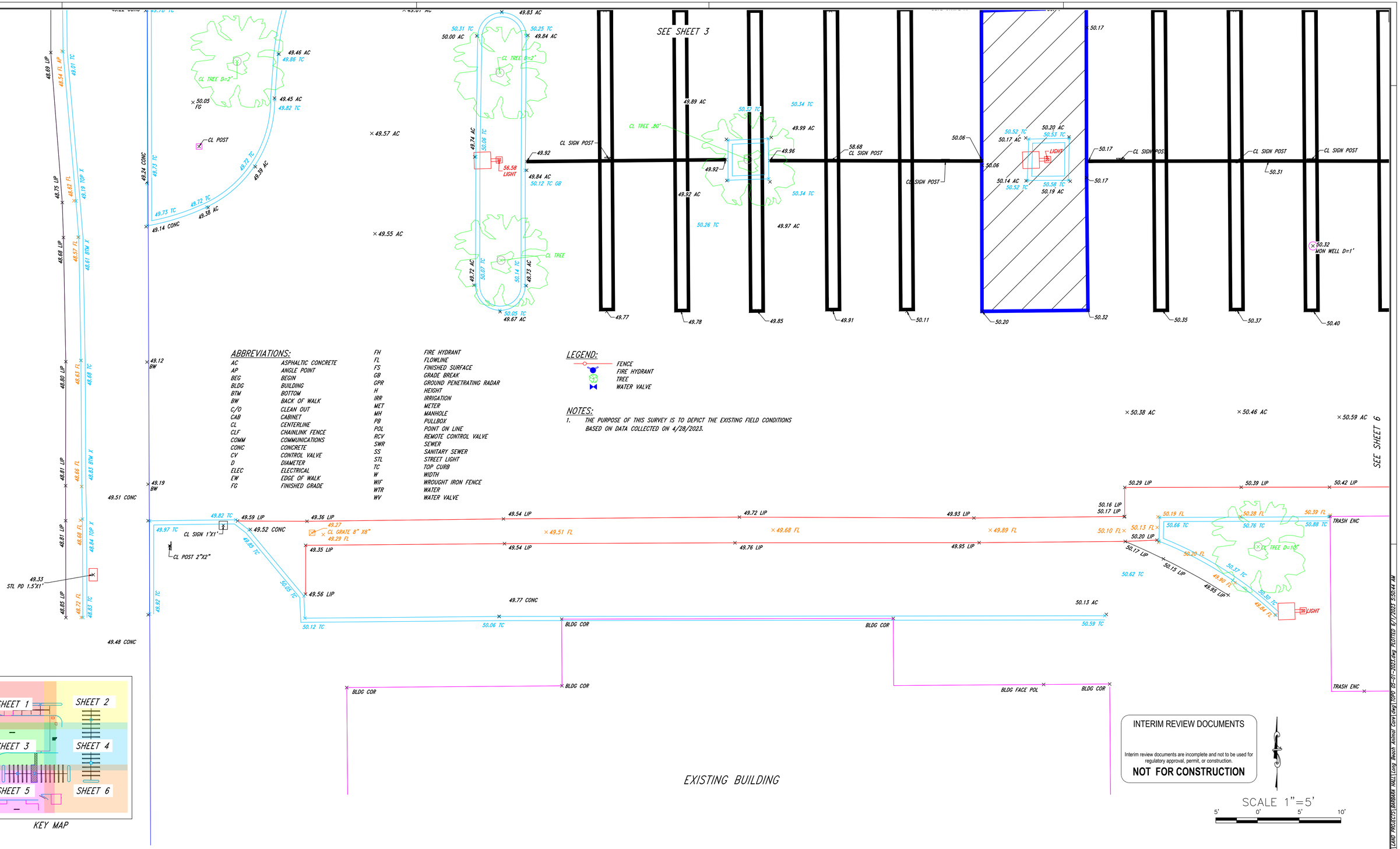

ABBREVIATIONS:

AC	ASPHALTIC CONCRETE
AP	ANGLE POINT
BEG	BEGIN
BLDG	BUILDING
BTM	BOTTOM
BW	BACK OF WALK
C/O	CLEAN OUT
CAB	CABINET
CL	CENTERLINE
CLF	CHAINLINK FENCE
COMM	COMMUNICATIONS
CONC	CONCRETE
CV	CONTROL VALVE
D	DIAMETER
ELEC	ELECTRICAL
EW	EDGE OF WALK
FG	FINISHED GRADE
FH	FIRE HYDRANT
FL	FLOWLINE
FS	FINISHED SURFACE
GB	GRADE BREAK
GPR	GROUND PENETRATING RADAR
H	HEIGHT
IRR	IRRIGATION
MET	METER
MH	MANHOLE
PB	PULLBOX
POL	POINT ON LINE
RCV	REMOTE CONTROL VALVE
SWR	SEWER
SS	SANITARY SEWER
STL	STREET LIGHT
TC	TOP CURB
W	WIDTH
WIF	WROUGHT IRON FENCE
WTR	WATER
WV	WATER VALVE

LEGEND:

- FENCE
- FIRE HYDRANT
- TREE
- WATER VALVE

NOTES:

1. THE PURPOSE OF THIS SURVEY IS TO DEPICT THE EXISTING FIELD CONDITIONS BASED ON DATA COLLECTED ON 4/28/2023.

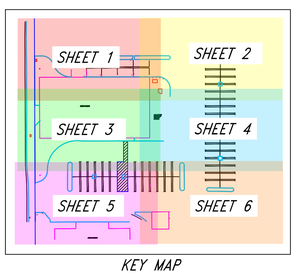

KEY MAP

INTERIM REVIEW DOCUMENTS

Interim review documents are incomplete and not to be used for regulatory approval, permit, or construction.

NOT FOR CONSTRUCTION

SCALE 1"=5'

5' 0' 5' 10'

P:\LAND PROJECTS\BARBARA HALL\Long Beach Animal Care\TOPO 08-01-2023.dwg PLOTTED 8/7/2023 3:56:14 AM

PREPARED BY:

LICENSED LAND SURVEYOR

BILL CARR SURVEYS

(714) 978-3889
755 DEBRA LANE
ANAHEIM, CA 92805

Jeff C. Clark

(ELECTRONICALLY SIGNED 5/31/2023)
JEFF C. CLARK P.L.S. 8671
EXP. DATE: 12-31-2023

PROFESSIONAL LAND SURVEYOR JEFF CARLETON CLARK No. 8671 EXP 12-31-23 STATE OF CALIFORNIA

BENCH MARK: CITY OF LONG BEACH BENCHMARK NO. 1029
ELEVATION = 48.646 (NGVD 29, 1985 ADJUSTMENT)

BASIS OF BEARINGS:

PREPARED FOR:

BARBARA HALL, P.E.
L.A. COUNTY ANIMAL CARE HEADQUARTERS
5898 CHERRY AVE
LONG BEACH, CA 90805

NO.	BY:	REVISION

CHECKED BY:	JC
DRAWN BY:	SPD
SURVEY CREW:	AG/EM
DATE OF SURVEY:	4/28/2023
DATE OF PLOT:	5/31/2023
COORDINATE FILE:	********.ASC
SCALE:	1" = 5 FEET
SHEET	5 OF 6 SHEETS

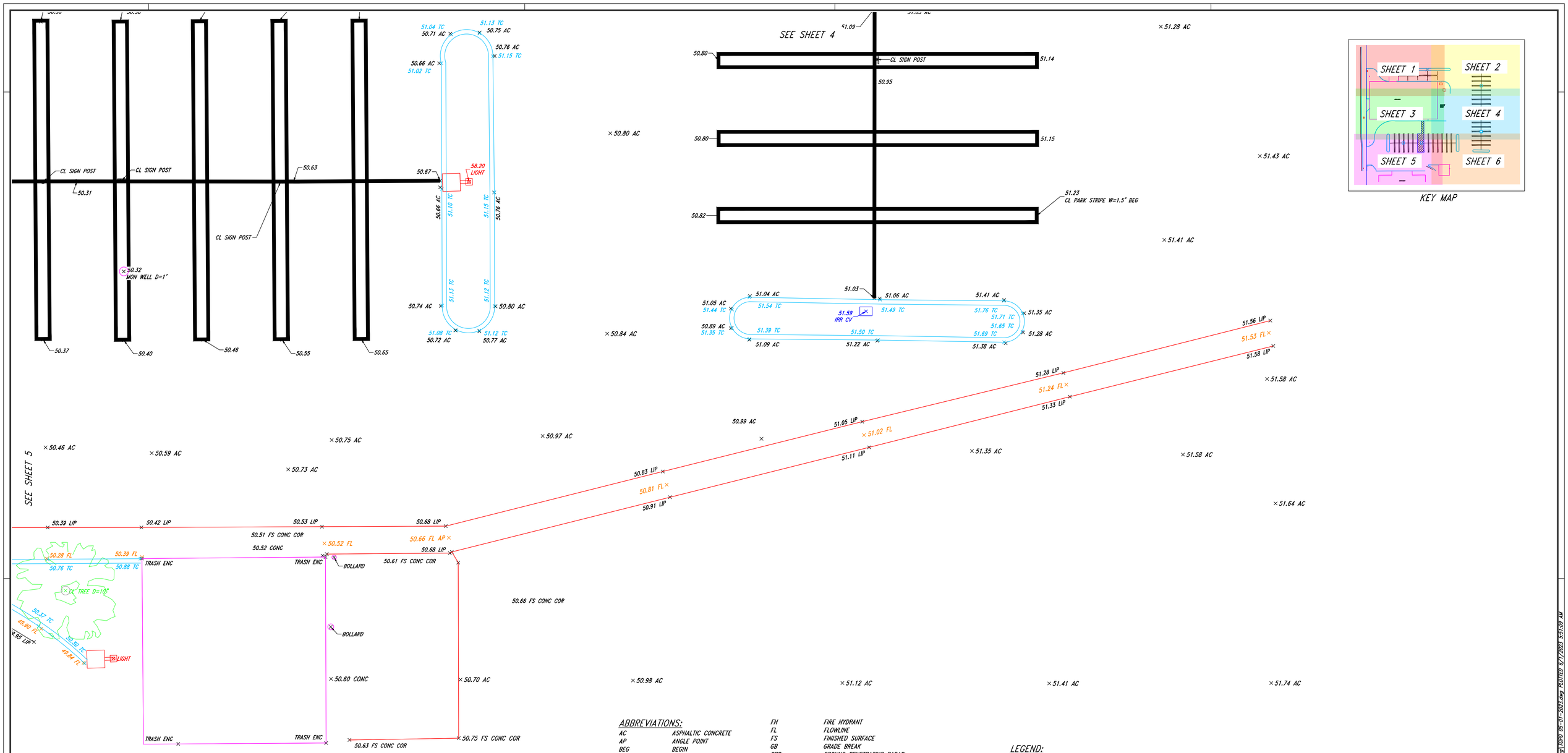

ABBREVIATIONS:

AC	ASPHALTIC CONCRETE
AP	ANGLE POINT
BEG	BEGIN
BLDG	BUILDING
BTM	BOTTOM
BW	BACK OF WALK
C/O	CLEAN OUT
CAB	CABINET
CL	CENTERLINE
CLF	CHAINLINK FENCE
COMM	COMMUNICATIONS
CONC	CONCRETE
CV	CONTROL VALVE
D	DIAMETER
ELEC	ELECTRICAL
EW	EDGE OF WALK
FG	FINISHED GRADE
FH	FIRE HYDRANT
FL	FLOWLINE
FS	FINISHED SURFACE
GB	GRADE BREAK
GPR	GROUND PENETRATING RADAR
H	HEIGHT
IRR	IRRIGATION
MET	METER
MH	MANHOLE
PB	PULLBOX
POL	POINT ON LINE
RCV	REMOTE CONTROL VALVE
SWR	SEWER
SS	SANITARY SEWER
STL	STREET LIGHT
TC	TOP CURB
W	WIDTH
WIF	WROUGHT IRON FENCE
WTR	WATER
WV	WATER VALVE

LEGEND:

- FENCE
- FIRE HYDRANT
- TREE
- WATER VALVE

NOTES:

1. THE PURPOSE OF THIS SURVEY IS TO DEPICT THE EXISTING FIELD CONDITIONS BASED ON DATA COLLECTED ON 4/28/2023.

INTERIM REVIEW DOCUMENTS

Interim review documents are incomplete and not to be used for regulatory approval, permit, or construction.

NOT FOR CONSTRUCTION

SCALE 1"=5'

5' 0' 5' 10'

PREPARED BY:

LICENSED LAND SURVEYOR

BILL CARR SURVEYS

(714) 978-3889
755 DEBRA LANE
ANAHEIM, CA 92805

Jeff C. Clark

(ELECTRONICALLY SIGNED 5/31/2023)
JEFF C. CLARK P.L.S. 8671
EXP. DATE: 12-31-2023

PROFESSIONAL LAND SURVEYOR
JEFF CARLETON CLARK
No. 8671
EXP 12-31-23
STATE OF CALIFORNIA

BENCH MARK: CITY OF LONG BEACH BENCHMARK NO. 1029
ELEVATION = 48.646 (NGVD 29, 1985 ADJUSTMENT)

BASIS OF BEARINGS:

PREPARED FOR:

BARBARA HALL, P.E.
L.A. COUNTY ANIMAL CARE HEADQUARTERS
5898 CHERRY AVE
LONG BEACH, CA 90805

NO.	BY:	REVISION

CHECKED BY:	JC
DRAWN BY:	SPD
SURVEY CREW:	AG/EM
DATE OF SURVEY:	4/28/2023
DATE OF PLOT:	5/31/2023
COORDINATE FILE:	********.ASC
SCALE:	1" = 5 FEET
SHEET	6 OF 6 SHEETS

P:\LAND PROJECTS\BARBARA HALL\Long Beach Animal Care.dwg\DWG 05-01-2023.dwg PLOTTED 5/1/2023 5:51:59 AM

GENERAL INFORMATION

BLDC 240131000110 GRADING PERMIT APPLICATION NO.

EARTHWORK VOLUMES CUT 6 (CY), FILL 4 (CY)

OVER EXCAVATION/ ALLUVIAL REMOVAL & COMPACTION N/A (CY)

EXPORT 2 (CY), EXPORT LOCATION:

TOTAL DISTURBED AREA 0.0166 (ACRES)

TOTAL PROPOSED LANDSCAPE AREA 235 SQUARE FEET

PRE-DEVELOPMENT IMPERVIOUS AREA 0.0111 (ACRES)

POST-DEVELOPMENT IMPERVIOUS AREA 0.0166 (ACRES)

WASTE DISCHARGE IDENTIFICATION NUMBER (WDID #) N/A

CONSTRUCTION & DEMOLITION DEBRIS RECYCLING AND REUSE PLAN (RPP ID)

POST-CONSTRUCTION BMP FEATURE(S) GPS COORDINATES X 33.086147, Y -118.1687350

PROPERTY INFORMATION

PROPERTY ADDRESSES 5898 CHERRY AVENUE, LONG BEACH, CA

TRACT/PARCEL MAP NO. 28555, MB 782-25-27 LOT/PARCEL NO. POR. LOT 1

PROPERTY OWNER LOS ANGELES COUNTY DEPT. OF ANIMAL CARE & CONTROL

ASSESSORS ID NUMBER(S) 7119-018-900

ZONING, REGIONAL PLANNING, AND OTHER AGENCY INFORMATION

PROPERTY ZONING: CHW

INTENDED LAND USE: OFFICE

CERTIFICATE OF COMPLIANCE: CC NO. N/A

PLOT PLAN NUMBER: PP NO. N/A

CONDITIONAL USE PERMIT: CUP NO. N/A EXPIRATION DATE:

OAK TREE REMOVAL PERMIT NUMBER: OTP NO. N/A EXPIRATION DATE:

COMMUNITY STANDARDS DISTRICT: N/A

CALIFORNIA COASTAL COMMISSION AREA: YES, X NO APPROVED VOLUME: (CY)

COASTAL DEVELOPMENT PERMIT CDP N/A EXPIRATION DATE:

FISH & WILDLIFE, ARMY CORP OF ENGINEERS, REGIONAL WATER CONTROL BOARD, AQMD & OTHER AGENCY PERMITS SHOULD BE ADDED AS APPLICABLE. (PERMIT NUMBER N/A, EXPIRATION DATE N/A)

DATE OF MAINTENANCE AGREEMENT	TYPE OF LID PROJECT					GPS COORDINATES		DESIGN STORM GREATER OF (CIRCLE ONE) 0.75-INCH / 85TH PERCENTILE
	DESIGNATED		NON- DESIGNATED - SMALL SCALE	NON- DESIGNATED - LARGE SCALE				RAINFALL DEPTH = 0.875 IN
	*COMMERCIAL	*RESIDENTIAL	RESIDENTIAL AND REDEVELOPMENT FOUR UNITS OR LESS	*RESIDENTIAL AND REDEVELOPMENT FOUR UNITS OR MORE	*NON-RESIDENTIAL	LATITUDE	LONGITUDE	STORMWATER QUALITY CONTROL MEASURES (RET, BIO, VEG, T)
TOTAL PROJECT AREA (SF)	770					33.086147,	-118.168350	DRYWELL, RET-4
% IMPERVIOUS AREA	100%							
TRIBUTARY AREA TO SITE (AC)	0.0166							
% IMPERVIOUSNESS OF TRIBUTARY AREA	100%							
*REDEVELOPEMENT-≤ 50% (CHECK)	–							
*REDEVELOPEMENT-≥ 50% (CHECK)	✓							
SITE SPECIFIC SOURCE CONTROL LID TABLE 5-1	S-1, S-8							
INFILTRATE/HARVEST (Y OR N)	Y							
SWQDV TOD% RETAINED ON-SITE (Y OR N)	N/A							
DELTA SWQDV (CF)	Y							
*DISCHARGE TO NATURAL DRAINAGE SYSTEM (Y OR N)	N							
HYDROMODIFICATION REQUIRED (Y1) LID SECT 8.2 EXEMPTION CRIETERIA	N							
PEAKFLOW RATE (CFS)	0.0019							
REQUIRED SWQDV (CF):	13.9							
BMP TOTAL CAPACITY (CF, CFS)	36							

BEST MANAGEMENT PRACTICES

MINIMUM REQUIREMENTS FOR CONSTRUCTION PROJECTS

1. ERODED SEDIMENTS AND OTHER POLLUTANTS MUST BE RETAINED ON SITE AND MAY NOT BE TRANSPORTED FROM THE SITE VIA SHEET FLOW, SWALES, AREA DRAINS, NATURAL DRAINAGE COURSE OR WIND.
2. STOCKPILES OF EARTH AND OTHER CONSTRUCTION-RELATED MATERIALS MUST BE PROTECTED FROM BEING TRANSPORTED FROM THE SITE BY WIND OR WATER.
3. FUELS, OILS, SOLVENTS AND OTHER TOXIC MATERIALS MUST BE STORED IN ACCORDANCE WITH THEIR LISTING AND ARE NOT TO CONTAMINATE THE SOIL NOR THE SURFACE WATERS. ALL APPROVED STORAGE CONTAINERS ARE TO BE PROTECTED FROM THE WEATHER. SPILLS MUST BE CLEANED UP IMMEDIATELY AND DISPOSED OF IN A PROPER MANNER. SPILLS MAY NOT BE WASHED INTO THE DRAINAGE SYSTEM.
4. EXCESS OR WASTER CONCRETE MAY NOT BE WASHED INTO THE PUBLIC WAY OR ANY OTHER DRAINAGE SYSTEM. PROVISIONS SHALL BE MADE TO RETAIN CONCRETE WASTES ON-SITE UNTIL THEY CAN BE DISPOSED OF AS SOLID WASTE.
5. TRASH AND CONSTRUCTION-RELATED SOIL WASTES MUST BE DEPOSITED INTO A COVERED RECEPTACLE TO PREVENT CONTAMINATION OF RAINWATER AND DISPERSAL BY WIND.
6. SEDIMENTS AND OTHER MATERIALS MAY NOT BE TRACKED FROM THE SITE BY VEHICLE TRAFFIC. THE CONSTRUCTION ENTRANCE ROADWAYS MUST BE STABILIZED TO INHIBIT SEDIMENTS FROM BEING DEPOSITED INTO THE PUBLIC WAYS. ACCIDENTAL DEPOSITIONS MUST BE SWEPT UP IMMEDIATELY AND MAY NOT BE WASHED DOWN BY RAIN OR BY ANY OTHER MEANS.
7. DEWATERING OPERATIONS: REMOVE SEDIMENTS FROM GROUND WATER.
8. PAVING OPERATIONS: REDUCE DISCHARGE OF POLLUTANTS FROM PAVING OPERATIONS.
9. STRUCTURE CONSTRUCTION AND PAINTING: PREVENT AND REDUCE DISCHARGE FROM CONSTRUCTION SITES AND PAINTING PROJECTS.
10. MATERIAL DELIVERY AND STORAGE: PREVENT AND REDUCE DISCHARGE OF POLLUTANTS TO STORM WATER FROM MATERIAL USE.
11. MATERIAL USE: PREVENT AND REDUCE DISCHARGE OF POLLUTANTS TO STORM WATER FROM MATERIAL USE.
12. SPILL PREVENTION AND CONTROL: PREVENT AND REDUCE DISCHARGE OF POLLUTANTS TO STORM WATER SYSTEMS WITH GOOD HOUSEKEEPING.
13. SOLID WASTE MANAGEMENT: PREVENT REDUCE DISCHARGE OF POLLUTANTS TO STORM WATER SYSTEMS FROM SOLID WASTE OR CONSTRUCTION.
14. HAZARDOUS WASTE MANAGEMENT: PREVENT AND REDUCE DISCHARGE OF POLLUTANTS TO STORM WATER FROM TOXIC MATERIALS.
15. CONTAMINATED SOIL MANAGEMENT: PREVENT AND REDUCE DISCHARGE OF POLLUTANTS TO STORM WATER FROM CONTAMINATED SOIL.
16. CONCRETE WASTE MANAGEMENT: PREVENT AND REDUCE DISCHARGE OF POLLUTANTS TO STORM WATER FROM CONCRETE WASTE.
17. SANITARY/SEPTIC WASTE MANAGEMENT: PREVENT AND REDUCE DISCHARGE OF POLLUTANTS TO STORM WATER FROM SANITARY AND SEPTIC SYSTEMS.
18. VEHICLE AND EQUIPMENT CLEANING: PREVENT AND REDUCE DISCHARGE OF POLLUTANTS TO STORM WATER FROM CLEANING OF VEHICLES AND EQUIPMENT.
19. VEHICLE AND EQUIPMENT FUELING: PREVENT AND REDUCE DISCHARGE OF POLLUTANTS TO STORM WATER FROM FUELING OF VEHICLES AND EQUIPMENT.
20. VEHICLE AND EQUIPMENT MAINTENANCE: PREVENT AND REDUCE DISCHARGE OF POLLUTANTS TO STORM WATER FROM MAINTENANCE OF VEHICLES AND EQUIPMENT.
21. EMPLOYEE/SUBCONTRACTOR TRAINING: SWPPP STORM WATER POLLUTION PREVENTION PLAN.
22. SCHEDULING: SEQUENCING THE CONSTRUCTION PROJECT TO REDUCE THE AMOUNT OF SOIL EXPOSED TO EROSION.
23. PRESERVATION OF EXISTING VEGETATION: MINIMIZE DAMAGE AND EROSION BY PRESERVING THE EXISTING VEGETATION.
24. SEEDING AND PLANTING: MINIMIZE EROSION WITH SEEDING AND PLANTING.
25. MULCHING: FOR STABILIZING CLEARED AND FRESHLY SEEDED AREAS.
26. GEOTEXTILES AND MATS: FOR STABILIZATION OF SOILS.
27. DUST CONTROLS: REDUCE DUST AND SOIL EROSION.
28. TEMPORARY STREAM CROSSING: RECOMMENDATIONS FOR INSTALLING A TEMPORARY CULVERT, FORD OR BRIDGE.
29. CONSTRUCTION ROAD STABILIZATION: RECOMMENDATIONS FOR DUST EROSION CONTROL.
30. STABILIZED CONSTRUCTION ENTRANCE: RECOMMENDATIONS FOR DUST, SEDIMENT AND EROSION CONTROL FOR PUBLIC STREETS.
31. EARTH DIKE: TEMPORARY BERM OR RIDGE OF COMPACTED SOIL.
32. TEMPORARY DRAINS AND SWALES: TO DIVERT OFF-SITE RUNOFF AROUND A CONSTRUCTION SITE.
33. SLOPE DRAIN: TEMPORARY PIPE TO DIVERT RUNOFF FROM THE TOP OF A SLOPE TO THE BOTTOM WITHOUT CAUSING EROSION.
34. OUTLET PROTECTION: INSTALL RIP-RAP TO REDUCE SEDIMENT IN THE SOIL.
35. CHECK DAMS: REDUCES VELOCITY OF CONCENTRATED STORM WATER FLOWS AND REDUCES EROSION.
36. SLOPE ROUGHENING/TERRACING: CREATES MICROCLIMATES FOR ESTABLISHING VEGETATION.
37. SILT FENCE: FOR SEDIMENTATION CONTROL.
38. STRAW BALE BARRIERS: FOR SEDIMENTATION CONTROL.
39. SAND BAG BARRIER: FOR SEDIMENTATION CONTROL.
40. BRUSH OR ROCK FILTER: FOR SEDIMENTATION CONTROL AND VELOCITY REDUCTION.
41. STORM DRAIN INLET PROTECTION: DEVICES WHICH DETAIN SEDIMENT LADEN RUNOFF.
42. SEDIMENT TRAP: SMALL EXCAVATED OR BERMED AREA FOR SEDIMENTATION.
43. SEDIMENT BASIN: POND CREATED TO ALLOW EXCESSIVE SEDIMENT TO SETTLE.

I AM AWARE OF THE ABOVE REQUIREMENTS AND WILL IMPLEMENT AND MAINTAIN THE REQUIREMENTS.

(OWNER OR AGENT'S SIGNATURE) (DATE)

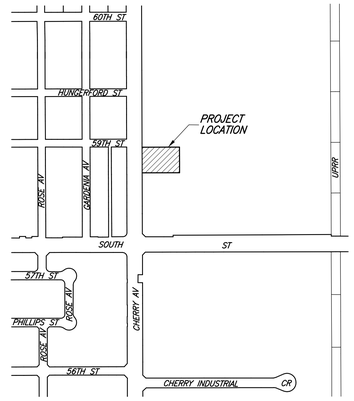

VICINITY MAP

SCALE: 1"=400'

CIVIL ENGINEER

BARBARA L. HALL P.E., INC.
318 W. EVERGREEN AVENUE
MONROVIA, CA 91016
TEL.: (626) 256-3220

GEOTECHNICAL ENGINEER:

WSP USA
ENVIRONMENTAL & INFRASTRUCTURE
6001 RICKENBACKER ROAD
LOS ANGELES, CALIFORNIA
TEL.: (323) 889-5300
PROJECT NO.: 4953-23-0012
DATED: 05/02/2023

SURVEY ENGINEER:

BILL CARR
755 DEBRA LANE
ANAHEIM, CA 92805
TEL.: (714) 978-3889
DATE OF FIELD SURVEY: 04/28/2023

SHEET INDEX

C1.01 GENERAL NOTES
C1.02 DEMOLITION PLAN
C1.03 PAVEMENT PLAN
C1.04 STRIPING PLAN
C2.01 GRADING PLAN
C4.01 DETAILS
C4.02 DETAILS
C4.03 DETAILS

BUILDING DRAINAGE PLAN
APPROVED
Zhang
09/03/2024 10:43:49 AM
BUILDING AND SAFETY DIVISION
LA COUNTY DEPARTMENT OF PUBLIC WORKS

811 Know what's below. Call before you dig.

CITY OF LONG BEACH EL. 48.646 FT
BENCHMARK NO. 1029
BRASS DISC FLUSH W/ PVMT; STAMPED "CLB BM 1029
RE 3111 1969" 1.1' W / CURB; 11.1' N / CURB
NGVD 29
1985 ADJ.

Barbara L. Hall, P.E., Inc.
318 West Evergreen Avenue
Monrovia, CA 91016
Phone: (626) 256-3220
Fax: (626) 256-3218

LCDG
La Cañada Design Group
Architecture
Planning
Interiors
630 N. Rosemead Boulevard, Suite 400
Pasadena, California 91107
(626) 351-4301 FAX (626)351-4302
www.lcdg.com
[redacted]

Registration
[redacted]

Client Name
COUNTY OF LOS ANGELES PUBLIC WORKS

Project Title
DEPARTMENT OF ANIMAL CARE AND CONTROL HEADQUARTERS FENCING PROJECT

Project Address
5898 Cherry Ave
Long Beach, CA 90805

SPEC #: 7856
[redacted]

INTERIM REVIEW DOCUMENTS

Interim review documents are incomplete and not to be used for regulatory approval, permit, or construction.

NOT FOR CONSTRUCTION

La Cañada Design Group expressly reserves its common law copyright and other property rights in these plans. These plans are not to be reproduced, changed or copied in any form or manner whatsoever, nor are they to be assigned to a third party without first obtaining the written permission and consent of La Cañada Design Group. The owner agrees to hold harmless and indemnify La Cañada Design Group against all damages, claims and losses arising out of any reuse of the plans and specifications without the authorization of La Cañada Design Group.

Milestones	Date
CD 50%	9/25/23
CD 90%	1/9/24
BACK CHECK 1	7/2/24

Revisions

No.	Description	Date

Drawn by RS
Reviewed by BLH

Plot date: 8/20/2024 10:23:54 AM

LCDG Job Number: 646.31

Sheet Title
GENERAL NOTES

Sheet Number
C1.01

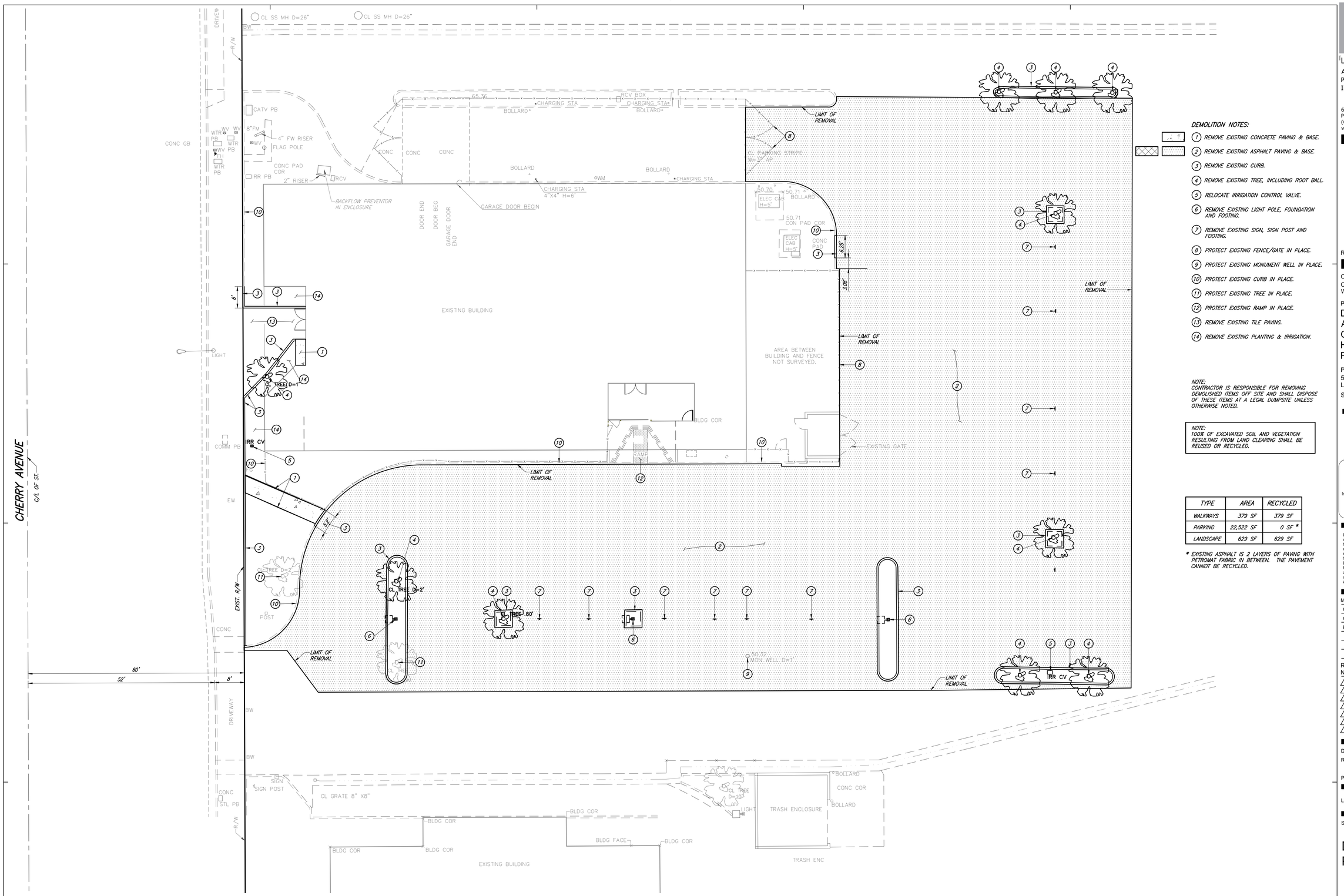

DEMOLITION NOTES:

1. REMOVE EXISTING CONCRETE PAVING & BASE.
2. REMOVE EXISTING ASPHALT PAVING & BASE.
3. REMOVE EXISTING CURB.
4. REMOVE EXISTING TREE, INCLUDING ROOT BALL.
5. RELOCATE IRRIGATION CONTROL VALVE.
6. REMOVE EXISTING LIGHT POLE, FOUNDATION AND FOOTING.
7. REMOVE EXISTING SIGN, SIGN POST AND FOOTING.
8. PROTECT EXISTING FENCE/GATE IN PLACE.
9. PROTECT EXISTING MONUMENT WELL IN PLACE.
10. PROTECT EXISTING CURB IN PLACE.
11. PROTECT EXISTING TREE IN PLACE.
12. PROTECT EXISTING RAMP IN PLACE.
13. REMOVE EXISTING TILE PAVING.
14. REMOVE EXISTING PLANTING & IRRIGATION.

NOTE:
CONTRACTOR IS RESPONSIBLE FOR REMOVING DEMOLISHED ITEMS OFF SITE AND SHALL DISPOSE OF THESE ITEMS AT A LEGAL DUMPSITE UNLESS OTHERWISE NOTED.

NOTE:
100% OF EXCAVATED SOIL AND VEGETATION RESULTING FROM LAND CLEARING SHALL BE REUSED OR RECYCLED.

TYPE	AREA	RECYCLED
WALKWAYS	379 SF	379 SF
PARKING	22,522 SF	0 SF *
LANDSCAPE	629 SF	629 SF

* EXISTING ASPHALT IS 2 LAYERS OF PAVING WITH PETROMAT FABRIC IN BETWEEN. THE PAVEMENT CANNOT BE RECYCLED.

BUILDING DRAINAGE PLAN
APPROVED
09/03/2024 10:43:49 AM
BUILDING AND SAFETY DIVISION
LA COUNTY DEPARTMENT OF PUBLIC WORKS

0' 10'

Know what's below. Call before you dig.

CITY OF LONG BEACH BENCHMARK NO. 1029 EL. 48.646 FT
BRASS DISC FLUSH W/ PVMT; STAMPED "CLB BM 1029 RE 3111 1969" 1.1' W / CURB; 11.1' N / CURB
NGVD 29
1985 ADJ.

Barbara L. Hall, P.E., Inc.
318 West Evergreen Avenue
Monrovia, CA 91016
Phone: (626) 256-3220
Fax: (626) 256-3218

LCDG
La Cañada Design Group
Architecture
Planning
Interiors
630 N. Rosemead Boulevard, Suite 400
Pasadena, California 91107
(626) 351-4301 FAX (626)351-4302
www.lcdg.com

Registration

Client Name
COUNTY OF LOS ANGELES PUBLIC WORKS

Project Title
DEPARTMENT OF ANIMAL CARE AND CONTROL HEADQUARTERS FENCING PROJECT

Project Address
5898 Cherry Ave
Long Beach, CA 90805

SPEC #: 7856

INTERIM REVIEW DOCUMENTS

Interim review documents are incomplete and not to be used for regulatory approval, permit, or construction.

NOT FOR CONSTRUCTION

La Cañada Design Group expressly reserves its common law copyright and other property rights in these plans. These plans are not to be reproduced, changed or copied in any form or manner whatsoever, nor are they to be assigned to a third party without first obtaining the written permission and consent of La Cañada Design Group. The owner agrees to hold harmless and indemnify La Cañada Design Group against all damages, claims and losses arising out of any reuse of the plans and specifications without the authorization of La Cañada Design Group.

Milestones	Date
CD 50%	9/25/23
CD 90%	1/9/24
BACK CHECK 1	7/2/24

Revisions

No.	Description	Date

Drawn by RS
Reviewed by BLH

Plot date: 8/20/2024 10:23:54 AM

LCDG Job Number: 646.31

Sheet Title
DEMOLITION PLAN

Sheet Number
C1.02

P:\Shared\Projects\La Canada Design Group\23511 - DACC Long Beach\SHEETS\DACCLB-C102.dwg, 8/28/2024 4:17:31 PM, AutoCAD PDF (General Documentation).pc3

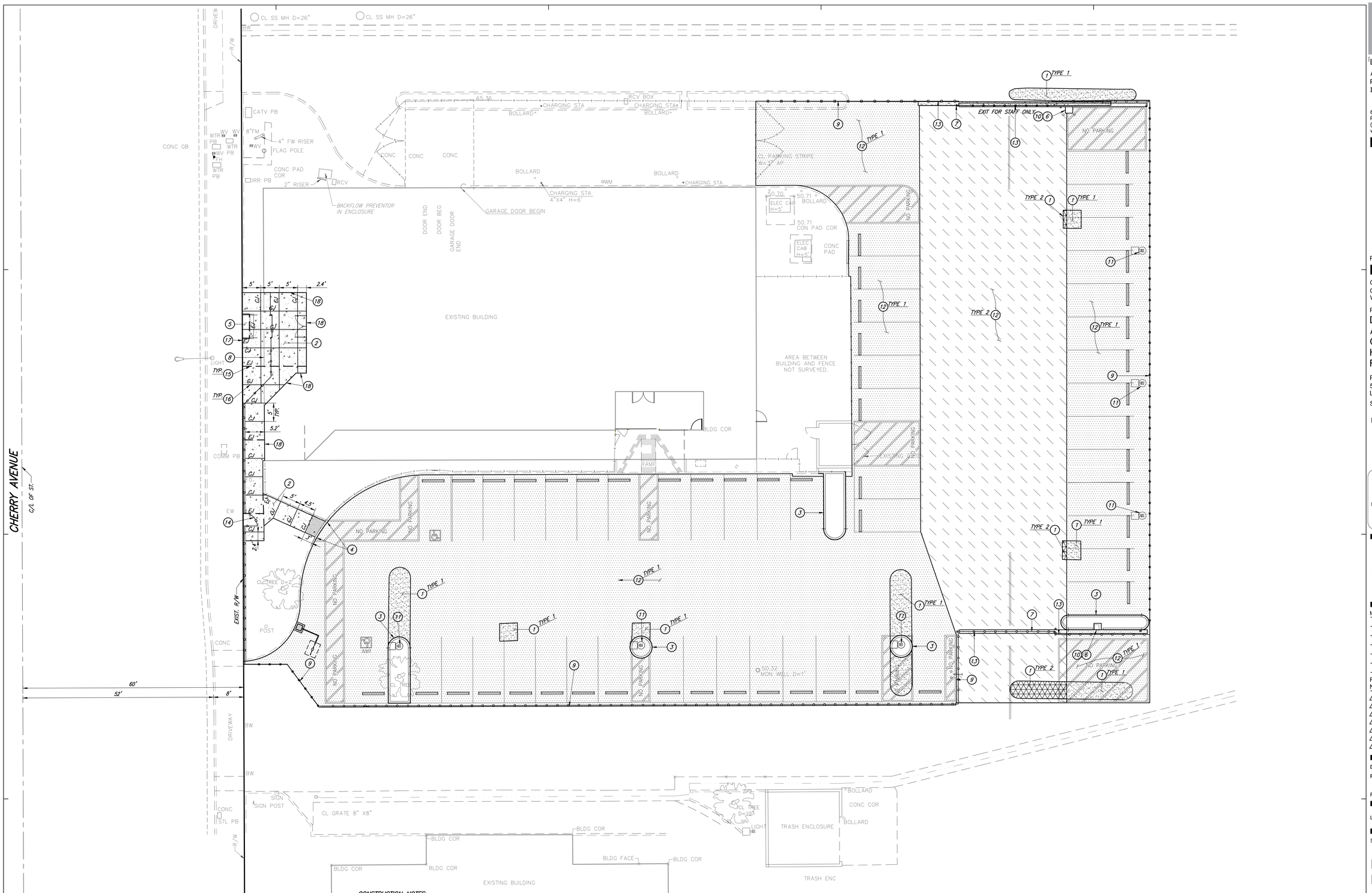

CONSTRUCTION NOTES:

TYPE 1
TYPE 2

1. CONSTRUCT AC PAVEMENT & BASE PER DETAIL 3 ON SHEET C4.01.
2. CONSTRUCT PEDESTRIAN PCC PAVEMENT PER DETAIL 1 ON SHEET C4.01.
3. P.C.C. CURB. SEE GRADING PLAN.
4. 0" CURB FACE. SEE GRADING PLAN.
5. CONCRETE STEPS. SEE GRADING PLAN.
6. EQUIPMENT PAD. SEE GRADING PLAN.
7. GATE TRACK FOOTING. SEE GRADING PLAN.
8. 6'-6" SLIDING GATE PER ARCHITECTURAL PLANS.
9. FENCE PER ARCHITECTURAL PLANS.
10. GATE MOTOR. SEE ARCHITECTURAL PLANS.
11. LIGHT POLE. SEE ELECTRICAL PLANS.
12. CONSTRUCT AC & BASE TO EXISTING LINE & GRADE PER DETAIL 3 ON SHEET C4.01.

TYPE 1
TYPE 2

13. 26' WIDE X 8' HIGH WROUGHT IRON SECURITY GATE PER ARCHITECTURAL PLANS.
14. 3'-6" WIDE X 8' HIGH WROUGHT IRON SECURITY ACCESS SWING WITH LEVER, LATCH AND LOCK PER ARCHITECTURAL PLANS.

EJ 15. EXPANSION JOINT AS SHOWN ON PLAN. ALL OTHER SCORE JOINTS SHOWN SHALL BE CONSTRUCTION JOINTS. REFER TO DETAIL 2 ON SHEET C4.01.

CJ 16. CONSTRUCTION JOINT AS SHOWN ON PLAN.

17. DOWELED COLD JOINT PER DETAIL 2C ON SHEET C4.01.
18. CONCRETE PAVEMENT AT BUILDING PER DETAIL 2 ON SHEET C4.01.

0' 10'

Know what's below. Call before you dig.

CITY OF LONG BEACH EL. 48.646 FT
BENCHMARK NO. 1029
BRASS DISC FLUSH W/ PVMT; STAMPED "CLB BM 1029
RE 3111 1969" 1.1' W / CURB; 11.1' N / CURB
NGVD 29
1985 ADJ.

BUILDING DRAINAGE PLAN
APPROVED
Jzhang
09/03/2024 10:43:49 AM
BUILDING AND SAFETY DIVISION
LA COUNTY DEPARTMENT OF PUBLIC WORKS

Barbara L. Hall, P.E., Inc.
318 West Evergreen Avenue
Monrovia, CA 91016
Phone: (626) 256-3220
Fax: (626) 256-3218

LCDG
La Cañada Design Group
Architecture
Planning
Interiors
630 N. Rosemead Boulevard, Suite 400
Pasadena, California 91107
(626) 351-4301 FAX (626)351-4302
www.lcdg.com

Registration

Client Name
COUNTY OF LOS ANGELES PUBLIC WORKS

Project Title
DEPARTMENT OF ANIMAL CARE AND CONTROL HEADQUARTERS FENCING PROJECT

Project Address
5898 Cherry Ave
Long Beach, CA 90805

SPEC #: 7856

INTERIM REVIEW DOCUMENTS

Interim review documents are incomplete and not to be used for regulatory approval, permit, or construction.

NOT FOR CONSTRUCTION

La Cañada Design Group expressly reserves its common law copyright and other property rights in these plans. These plans are not to be reproduced, changed or copied in any form or manner whatsoever, nor are they to be assigned to a third party without first obtaining the written permission and consent of La Cañada Design Group. The owner agrees to hold harmless and indemnify La Cañada Design Group against all damages, claims and losses arising out of any reuse of the plans and specifications without the authorization of La Cañada Design Group.

Milestones	Date
CD 50%	9/25/23
CD 90%	1/9/24
BACK CHECK 1	7/2/24

Revisions

No.	Description	Date

Drawn by RS
Reviewed by BLH

Plot date: 8/20/2024 10:23:54 AM

LCDG Job Number: 646.31

Sheet Title
PAVEMENT PLAN

Sheet Number
C1.03

P:\Shared\Projects\La Canada Design Group\23511 - DACC Long Beach\SHEETS\DACCLB-C103.dwg, 8/28/2024 5:16:05 PM, AutoCAD PDF (General Documentation).pc3
P:\Shared\Projects\La Canada Design Group\23511 - DACC Long Beach\SHEETS\DACCLB-C103.dwg

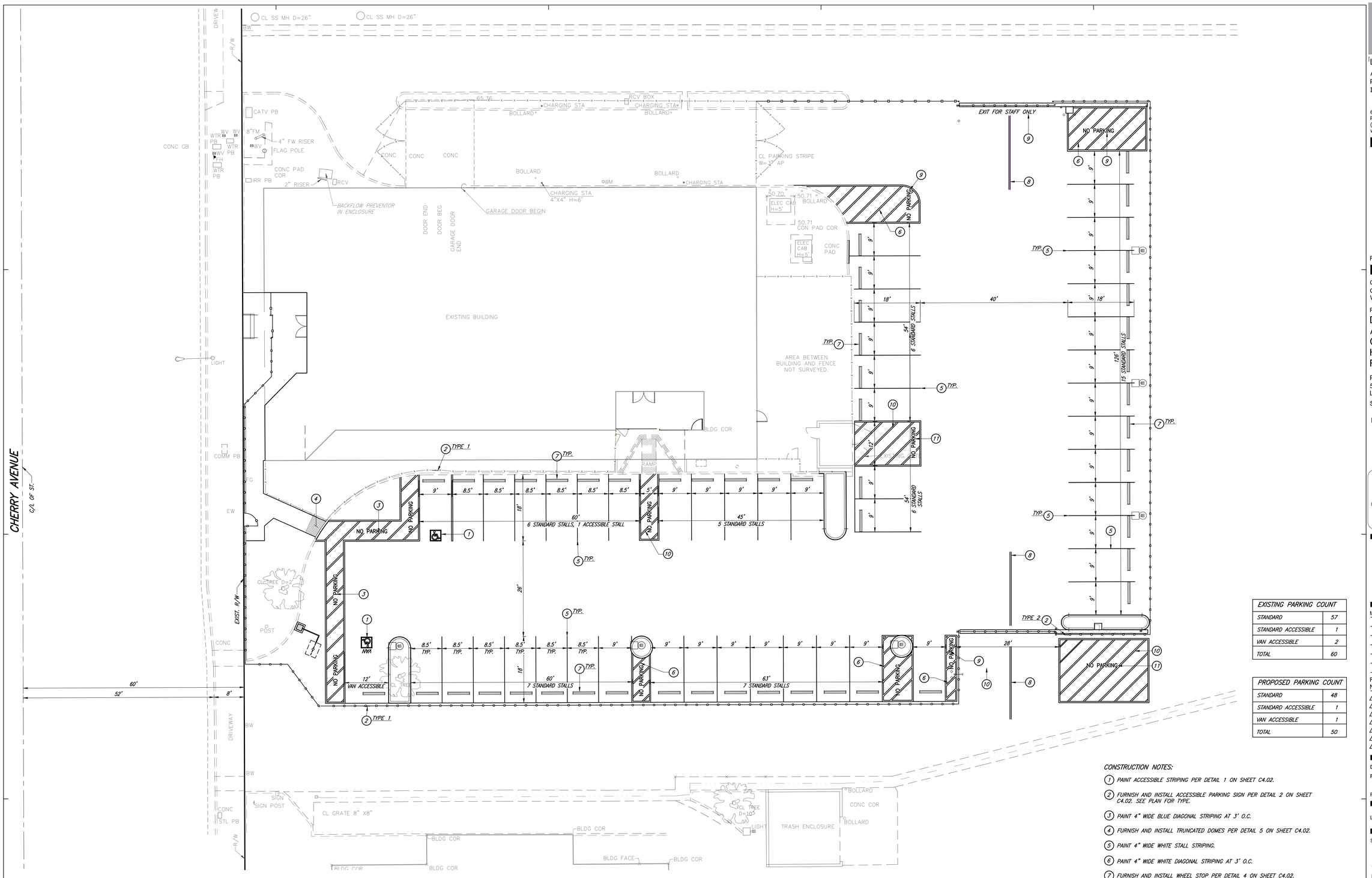

EXISTING PARKING COUNT	
STANDARD	57
STANDARD ACCESSIBLE	1
VAN ACCESSIBLE	2
TOTAL	60

PROPOSED PARKING COUNT	
STANDARD	48
STANDARD ACCESSIBLE	1
VAN ACCESSIBLE	1
TOTAL	50

CONSTRUCTION NOTES:

1. PAINT ACCESSIBLE STRIPING PER DETAIL 1 ON SHEET C4.02.
2. FURNISH AND INSTALL ACCESSIBLE PARKING SIGN PER DETAIL 2 ON SHEET C4.02. SEE PLAN FOR TYPE.
3. PAINT 4" WIDE BLUE DIAGONAL STRIPING AT 3' O.C.
4. FURNISH AND INSTALL TRUNCATED DOMES PER DETAIL 5 ON SHEET C4.02.
5. PAINT 4" WIDE WHITE STALL STRIPING.
6. PAINT 4" WIDE WHITE DIAGONAL STRIPING AT 3' O.C.
7. FURNISH AND INSTALL WHEEL STOP PER DETAIL 4 ON SHEET C4.02.
8. PAINT 20 LF OF DOUBLE 4" WIDE YELLOW STRIPING PER DETAIL 21 PER SPPWC STD. PLAN 170-0.
9. PAINT 4" WIDE 12" HIGH WHITE PAVEMENT MARKING.
10. PAINT 4" WIDE YELLOW DIAGONAL STRIPING AT 3' O.C.
11. PAINT 4" WIDE 12" HIGH YELLOW PAVEMENT MARKING.

BUILDING DRAINAGE PLAN
APPROVED
zhang
09/03/2024 10:43:49 AM
BUILDING AND SAFETY DIVISION
LA COUNTY DEPARTMENT OF PUBLIC WORKS

0' 10'

Know what's below. Call before you dig.

CITY OF LONG BEACH EL. 48.646 FT
BENCHMARK NO. 1029
BRASS DISC FLUSH W/ PVMT; STAMPED "CLB BM 1029 RE 3111 1969" 1.1' W / CURB; 11.1' N / CURB
NGVD 29
1985 ADJ.

Barbara L. Hall, P.E., Inc.
318 West Evergreen Avenue
Monrovia, CA 91016
Phone: (626) 256-3220
Fax: (626) 256-3218

LCDG
La Cañada Design Group
Architecture
Planning
Interiors
630 N. Rosemead Boulevard, Suite 400
Pasadena, California 91107
(626) 351-4301 FAX (626)351-4302
www.lcdg.com

Registration

Client Name
COUNTY OF LOS ANGELES PUBLIC WORKS

Project Title
DEPARTMENT OF ANIMAL CARE AND CONTROL HEADQUARTERS FENCING PROJECT

Project Address
5898 Cherry Ave
Long Beach, CA 90805

SPEC #: 7856

INTERIM REVIEW DOCUMENTS

Interim review documents are incomplete and not to be used for regulatory approval, permit, or construction.

NOT FOR CONSTRUCTION

La Cañada Design Group expressly reserves its common law copyright and other property rights in these plans. These plans are not to be reproduced, changed or copied in any form or manner whatsoever, nor are they to be assigned to a third party without first obtaining the written permission and consent of La Cañada Design Group. The owner agrees to hold harmless and indemnify La Cañada Design Group against all damages, claims and losses arising out of any reuse of the plans and specifications without the authorization of La Cañada Design Group.

Milestones	Date
CD 50%	9/25/23
CD 90%	1/9/24
BACK CHECK 1	7/2/24

Revisions

No.	Description	Date

Drawn by RS
Reviewed by BLH

Plot date: 8/20/2024 10:23:54 AM

LCDG Job Number: 646.31

Sheet Title
STRIPING PLAN

Sheet Number
C1.04

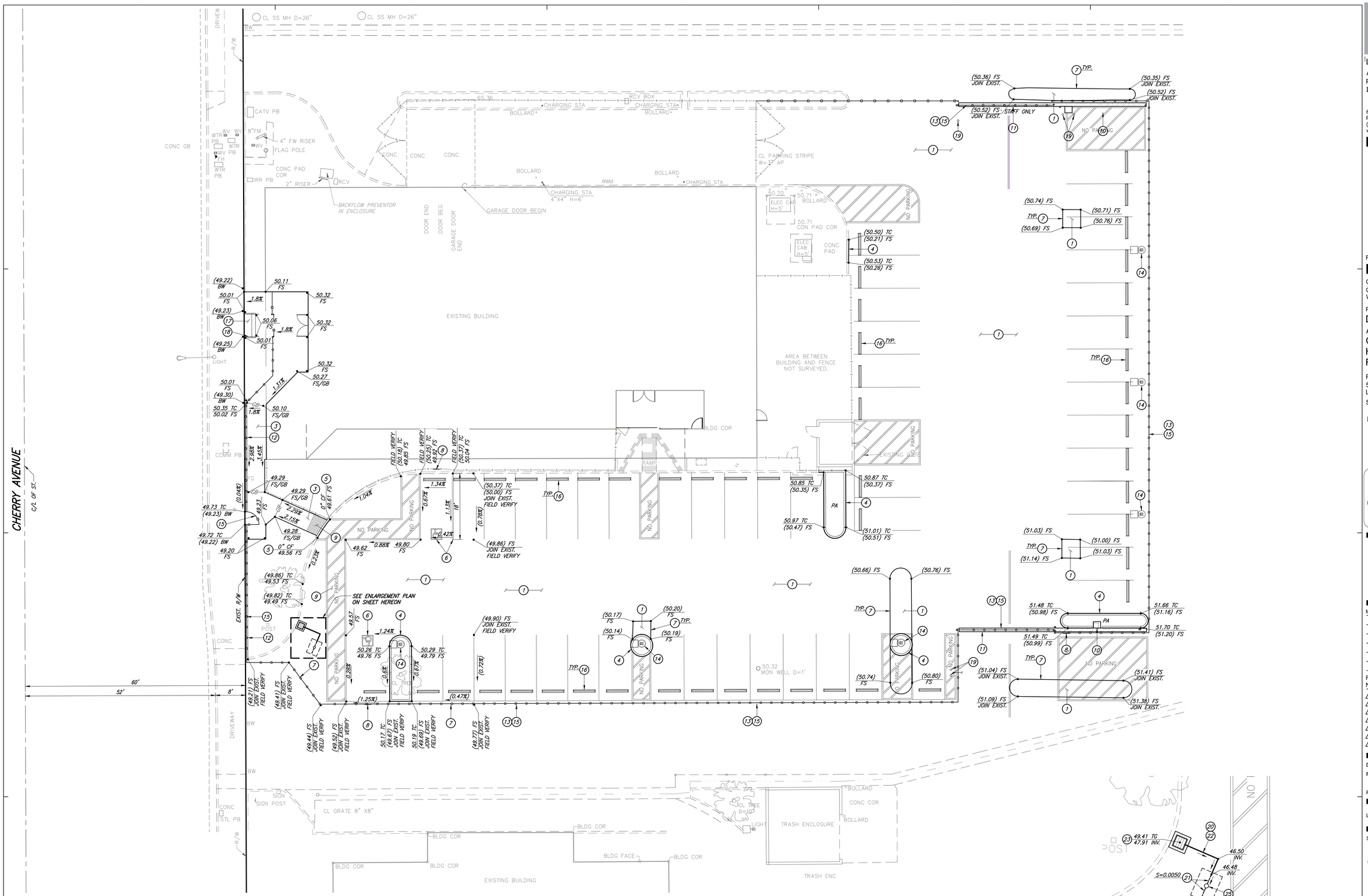

ENLARGEMENT PLAN

SCALE: 1" = 5'

CONSTRUCTION NOTES:

1. AC PAVEMENT & BASE. SEE PAVEMENT PLAN.
2. CONSTRUCT 0" CURB FACE PER DETAIL 5 ON SHEET C4.01.
3. PEDESTRIAN PCC PAVEMENT. SEE PAVEMENT PLAN.
4. CONSTRUCT P.C.C. CURB PER DETAIL 4 ON SHEET C4.01.
5. CONSTRUCT 0" TO 6" CURB FACE TRANSITION PER DETAIL 6 ON SHEET C4.01.
6. ACCESSIBLE STALL STRIPING. SEE STRIPING PLAN.
7. JOIN LINE.
8. ACCESSIBLE PARKING SIGN. SEE STRIPING PLAN.
9. TRUNCATED DOMES. SEE STRIPING PLAN.
10. CONSTRUCT EQUIPMENT PAD PER DETAIL 7 ON SHEET C4.01.
11. CONSTRUCT CONCRETE FOOTING AT VEHICULAR GATE TRACK PER DETAIL 2 ON SHEET C4.03.
12. CONSTRUCT TYPE 1 PCC CURB PER DETAIL 8 ON SHEET C4.01.
13. FENCE POST FOOTING PER MANUFACTURER.
14. CONSTRUCT LIGHT POLE FOOTING PER DETAIL 9 ON SHEET C4.01.
15. FENCING/GATE. SEE ARCHITECTURAL PLANS.
16. WHEEL STOP. SEE STRIPING PLAN.
17. CONCRETE STAIRS ON GRADE PER DETAIL 3 ON SHEET C4.03.
18. HANDRAIL AT CONCRETE STAIRS PER DETAIL 4 ON SHEET C4.03.
19. CONSTRUCT BOLLARD PER DETAIL 1 ON SHEET C4.03.
20. FURNISH & INSTALL 4"ø SCHEDULE 40 PVC DWV PIPE & FITTINGS.
21. FURNISH & INSTALL PERFORATED 6"ø SCHEDULE 40 PVC PIPE & FITTINGS.
22. BACKFILL TRENCH PER DETAIL 8 ON SHEET C4.03.
23. CONSTRUCT FILTER CATCH BASIN PER DETAIL 7 ON SHEET C4.03.
24. CONSTRUCT INFILTRATION TRENCH PER DETAIL 9 ON SHEET C4.03.
25. CONSTRUCT OBSERVATION WELL PER DETAIL 9 ON SHEET C4.03.

NOTE:
100% OF EXCAVATED SOIL AND VEGETATION RESULTING FROM LAND CLEARING SHALL BE REUSED OR RECYCLED.

0' 10'

Know what's **below.** **Call** before you dig.

CITY OF LONG BEACH EL. 48.646 FT
BENCHMARK NO. 1029
BRASS DISC FLUSH W/ PVMT; STAMPED "CLB BM 1029 RE 3111 1969" 1.1' W / CURB; 11.1' N / CURB
NGVD 29
1985 ADJ.

Barbara L. Hall, P.E., Inc.
318 West Evergreen Avenue
Monrovia, CA 91016
Phone: (626) 256-3220
Fax: (626) 256-3218

BUILDING DRAINAGE PLAN
APPROVED
Zhang
09/03/2024 10:43:49 AM
BUILDING AND SAFETY DIVISION
LA COUNTY DEPARTMENT OF PUBLIC WORKS

LCDG
La Cañada Design Group
Architecture
Planning
Interiors

630 N. Rosemead Boulevard, Suite 400
Pasadena, California 91107
(626) 351-4301 FAX (626)351-4302
www.lcdg.com

Registration

Client Name
COUNTY OF LOS ANGELES PUBLIC WORKS

Project Title
DEPARTMENT OF ANIMAL CARE AND CONTROL HEADQUARTERS FENCING PROJECT

Project Address
5898 Cherry Ave
Long Beach, CA 90805

SPEC #: 7856

INTERIM REVIEW DOCUMENTS

Interim review documents are incomplete and not to be used for regulatory approval, permit, or construction.

NOT FOR CONSTRUCTION

La Cañada Design Group expressly reserves its common law copyright and other property rights in these plans. These plans are not to be reproduced, changed or copied in any form or manner whatsoever, nor are they to be assigned to a third party without first obtaining the written permission and consent of La Cañada Design Group. The owner agrees to hold harmless and indemnify La Cañada Design Group against all damages, claims and losses arising out of any reuse of the plans and specifications without the authorization of La Cañada Design Group.

Milestones	Date
CD 50%	9/25/23
CD 90%	1/9/24
BACK CHECK 1	7/2/24

Revisions

No.	Description	Date

Drawn by RS
Reviewed by BLH

Plot date: 8/20/2024 10:23:54 AM

LCDG Job Number: 646.31

Sheet Title
GRADING PLAN

Sheet Number
C2.01

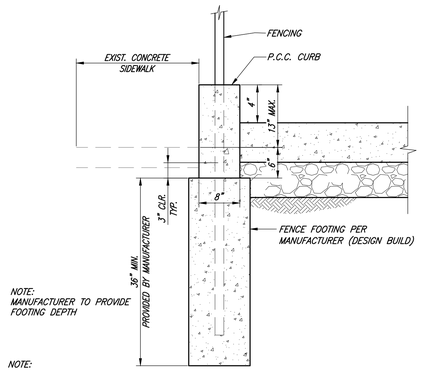

TYPE 1

P.C.C. CURB (8)

NTS

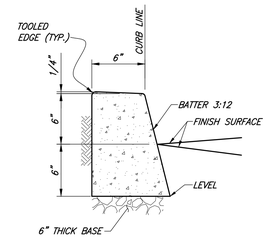

6" CURB (4)

NTS

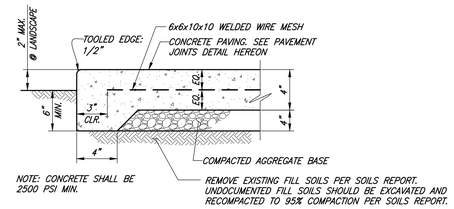

PCC PEDESTRIAN PAVEMENT (1)

NTS

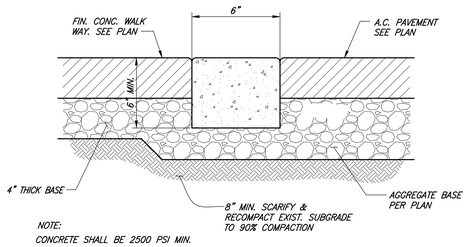

0" CURB FACE (5)

NTS

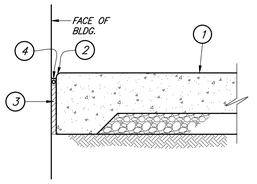

NOTE:

SEE PAVING PLAN FOR SCORING & JOINT PATTERNS.

MINIMUM REQUIREMENTS:
- E.J.'S @ 20' O.C. EACH WAY
- C.J.'S @ 5' O.C. EACH WAY FOR PEDESTRIAN –
C.J.'S @ 10' O.C. EACH WAY FOR VEHICULAR

CONCRETE PAVEMENT @ BLDG.

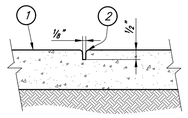

A. CONTROL JOINT

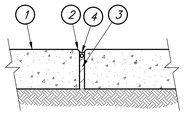

B. EXPANSION JOINT WITH SEALANT

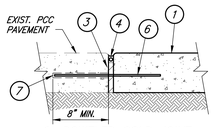

C. DOWELED COLD JOINT

@ JOIN W/EXISTING PCC PAVEMENT

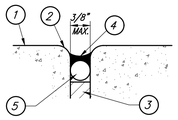

TYPICAL ENLARGEMENT OF JOINT

LEGEND:

1. CONC. PAVING
2. 1/4" TOOLED RADIUS EDGE OR SAWCUT JOINT
3. PREMOLDED BITUMINOUS EXPANSION JOINT FILLER PER SSPWC SECTIONS 201-3.2 WITH TYPE "A" SEALANT 201-3.4
4. SEALANT W/SAND FINISH – COLOR TO BE SELECTED BY ARCH. SUBMIT COLOR SAMPLES PRIOR TO INSTALLATION
5. BACKER ROD
6. #4x18" DOWEL @ 36" O.C., CTR. IN CONC.
7. DRILLED EPOXY DOWEL PREMOLDED BITUMINOUS EXPANSION JOINT FILLER PER SSPWC SECTIONS 201-3.2 WITH TYPE "A" SEALANT 201-3.4

PCC PAVEMENT JOINTS (2)

NTS

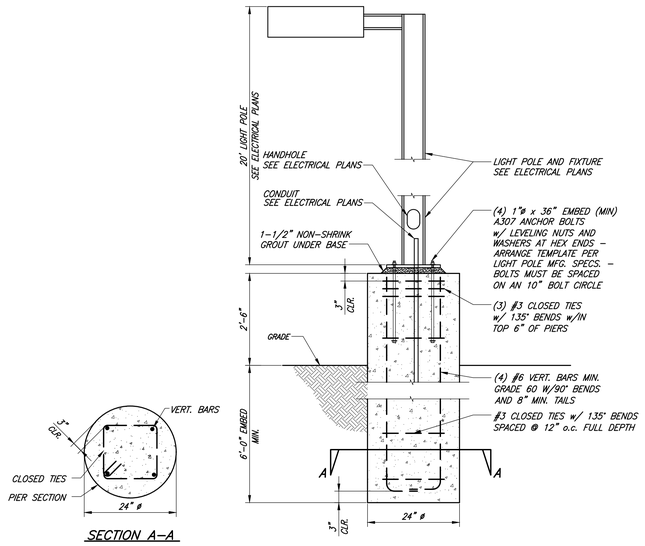

SECTION A–A

CONCRETE f'c= 2500 PSI
REINF. STEEL fy= 60 ksi

LIGHT POLE FOOTING (9)

NTS

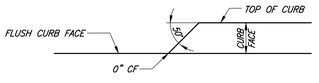

ELEVATION

0"–6" CURB FACE TRANSITION (6)

NTS

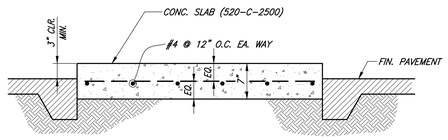

EQUIPMENT PAD (7)

NTS

		ASPHALT PAVEMENT THICKNESS INCHES	BASE COURSE INCHES
TYPE 1	AUTOMOBILE PARKING AND DRIVEWAYS WITH LIGHT TRUCK TRAFFIC.	3	4
TYPE 2	DRIVEWAYS WITH HEAVY TRUCK TRAFFIC	4	4

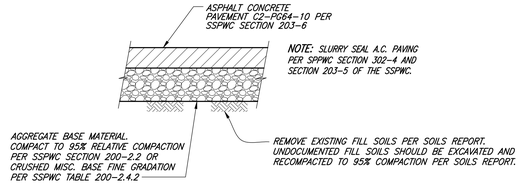

ASPHALT CONCRETE PAVEMENT (3)

NTS

BUILDING DRAINAGE PLAN
APPROVED
09/03/2024 10:43:49 AM
BUILDING AND SAFETY DIVISION
LA COUNTY DEPARTMENT OF PUBLIC WORKS

Barbara L. Hall, P.E., Inc.
318 West Evergreen Avenue
Monrovia, CA 91016
Phone: (626) 256-3220
Fax: (626) 256-3218

LCDG
La Cañada Design Group
Architecture
Planning
Interiors

630 N. Rosemead Boulevard, Suite 400
Pasadena, California 91107
(626) 351-4301 FAX (626)351-4302
www.lcdg.com

Registration

Client Name
COUNTY OF LOS ANGELES PUBLIC WORKS

Project Title
DEPARTMENT OF ANIMAL CARE AND CONTROL HEADQUARTERS FENCING PROJECT

Project Address
5898 Cherry Ave
Long Beach, CA 90805

SPEC #: 7856

INTERIM REVIEW DOCUMENTS

Interim review documents are incomplete and not to be used for regulatory approval, permit, or construction.

NOT FOR CONSTRUCTION

La Cañada Design Group expressly reserves its common law copyright and other property rights in these plans. These plans are not to be reproduced, changed or copied in any form or manner whatsoever, nor are they to be assigned to a third party without first obtaining the written permission and consent of La Cañada Design Group. The owner agrees to hold harmless and indemnify La Cañada Design Group against all damages, claims and losses arising out of any reuse of the plans and specifications without the authorization of La Cañada Design Group.

Milestones	Date
CD 50%	9/25/23
CD 90%	1/9/24
BACK CHECK 1	7/2/24

Revisions

No.	Description	Date

Drawn by RS
Reviewed by BLH

Plot date: 8/20/2024 10:23:54 AM

LCDG Job Number: 646.31

Sheet Title
DETAILS

Sheet Number
C4.01

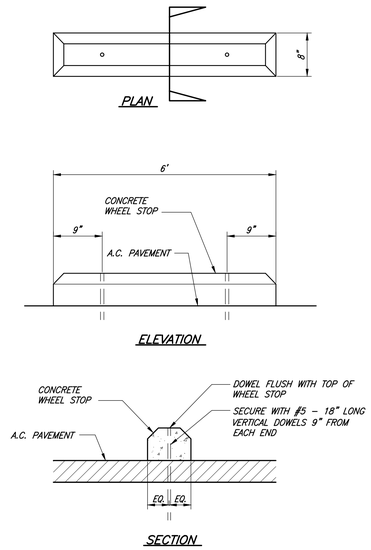

CONCRETE WHEEL STOP (4)

NTS

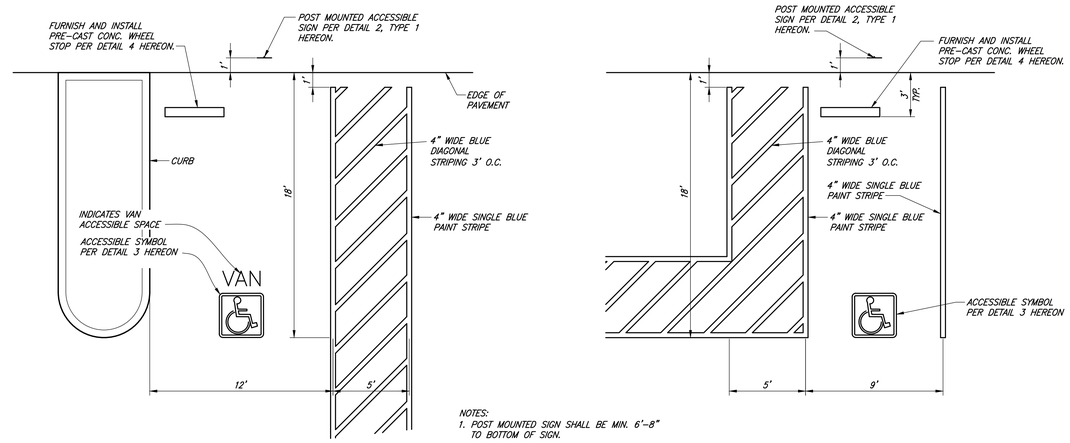

NOTES:
1. POST MOUNTED SIGN SHALL BE MIN. 6'-8" TO BOTTOM OF SIGN.

ACCESSIBLE STALL STRIPING (1)

NTS

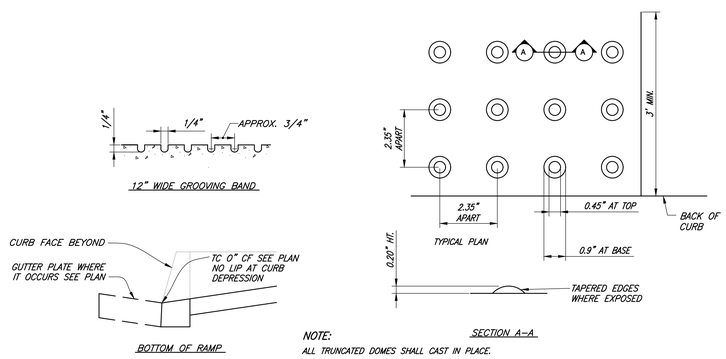

NOTE:
ALL TRUNCATED DOMES SHALL CAST IN PLACE.
COLOR: FEDERAL YELLOW

BOTTOM OF RAMP AND TRUNCATED DOMES ON CURB RAMP (5)

NTS

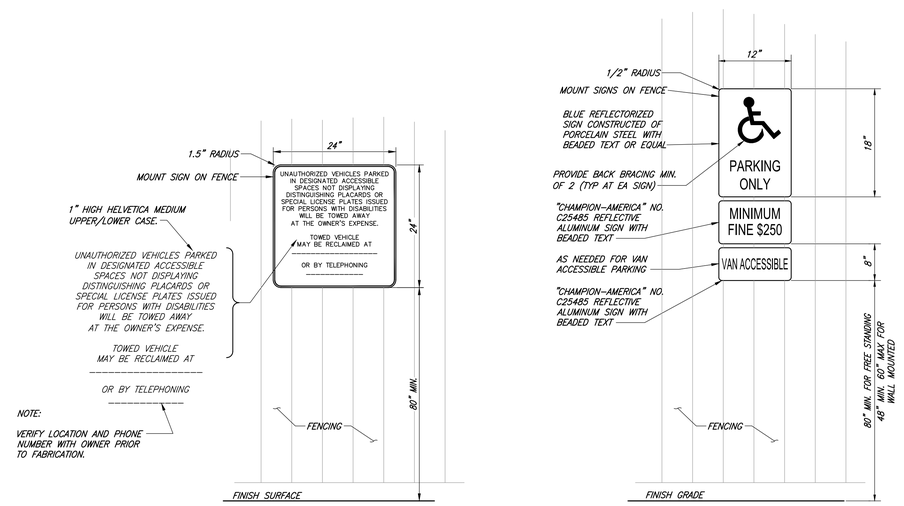

TYPE 2
R100B (CA)

TYPE 1

ACCESSIBLE PARKING SIGN (2)

NTS

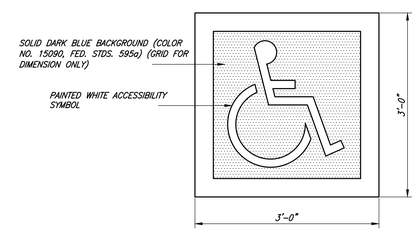

ACCESSIBLE SYMBOL (3)

NTS

BUILDING DRAINAGE PLAN
APPROVED
Zhang
09/03/2024 10:43:49 AM
BUILDING AND SAFETY DIVISION
LA COUNTY DEPARTMENT OF PUBLIC WORKS

Barbara L. Hall, P.E., Inc.
318 West Evergreen Avenue
Monrovia, CA 91016
Phone: (626) 256-3220
Fax: (626) 256-3218

LCDG
La Cañada Design Group
Architecture
Planning
Interiors
630 N. Rosemead Boulevard, Suite 400
Pasadena, California 91107
(626) 351-4301 FAX (626)351-4302
www.lcdg.com

Registration

Client Name
COUNTY OF LOS ANGELES PUBLIC WORKS

Project Title
DEPARTMENT OF ANIMAL CARE AND CONTROL HEADQUARTERS FENCING PROJECT

Project Address
5898 Cherry Ave
Long Beach, CA 90805

SPEC #: 7856

INTERIM REVIEW DOCUMENTS

Interim review documents are incomplete and not to be used for regulatory approval, permit, or construction.

NOT FOR CONSTRUCTION

La Cañada Design Group expressly reserves its common law copyright and other property rights in these plans. These plans are not to be reproduced, changed or copied in any form or manner whatsoever, nor are they to be assigned to a third party without first obtaining the written permission and consent of La Cañada Design Group. The owner agrees to hold harmless and indemnify La Cañada Design Group against all damages, claims and losses arising out of any reuse of the plans and specifications without the authorization of La Cañada Design Group.

Milestones	Date
CD 50%	9/25/23
CD 90%	1/9/24
BACK CHECK 1	7/2/24

Revisions

No.	Description	Date

Drawn by RS
Reviewed by BLH

Plot date: 8/20/2024 10:23:54 AM

LCDG Job Number: 646.31

Sheet Title
DETAILS

Sheet Number
C4.02

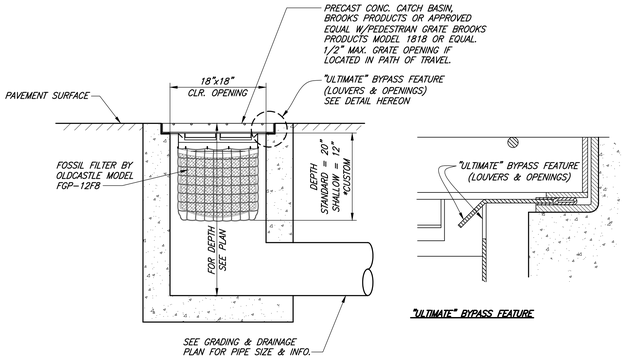

FILTER CATCH BASIN (7)
NTS

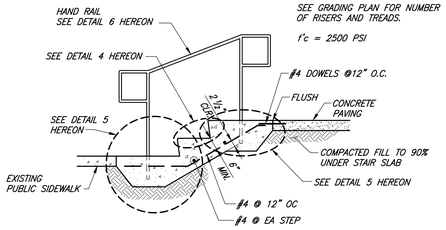

CONCRETE STAIRS ON GRADE (3)
NTS

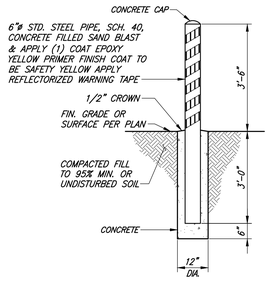

BOLLARD (1)
NTS

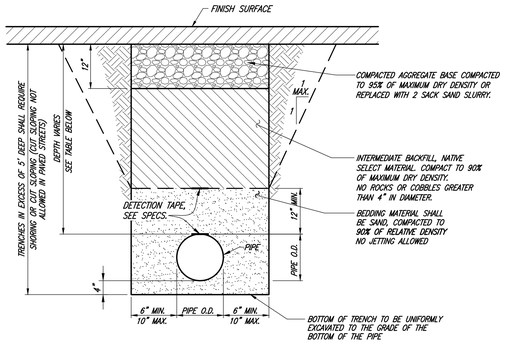

TRENCH BACKFILL (8)
NTS

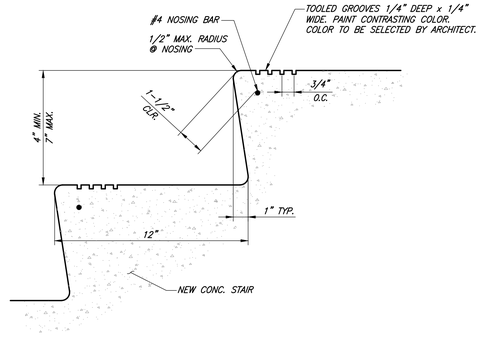

STEP NOSING (4)
NTS

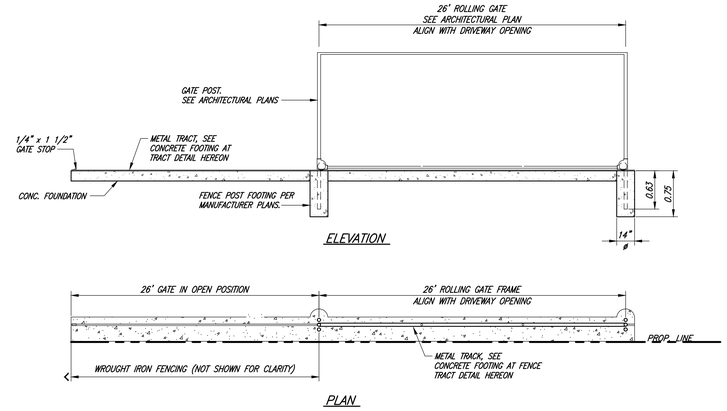

ELEVATION

PLAN

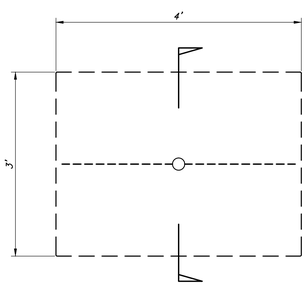

PLAN VIEW

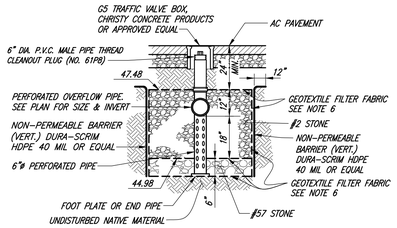

SECTION

GRADATION TABLE			
SIEVE SIZE	NO. 2	NO. 57	NO. 8
3"	100		
2 1/2"	90 TO 100		
2"	35 TO 70		
1 1/2"	0 TO 15	100	
3/4"	–	95 TO 100	
1/2"	0 TO 5		100
3/8"		25 TO 60	85 TO 100
NO. 4			10 TO 30
NO. 8		0 TO 10	0 TO 10
NO 16		0 TO 5	0 TO 5

NOTES:

1. PROTECT BASE LAYERS FROM SEDIMENT AT ALL TIMES DURING CONSTRUCTION.
2. KEEP HEAVY EQUIPMENT AWAY FROM EXCAVATED SUBGRADE PRIOR TO PLACING STONE.
3. SPREAD NO. 2 STONE IN 6" MINIMUM LIFTS. THE NO. 57 STONE CAN BE PLACED IN ONE LIFT.
4. COMPACT INDIVIDUAL LAYERS OF STONE WITH AT LEAST 4 PASSES OF A MINIMUM 10 TON STEEL DRUM ROLLER. THE FIRST 2 PASSES CAN BE MADE IN VIBRATORY MODE AND REMAINING PASSES SHALL BE MADE IN STATIC MODE. STONE SURFACES SHALL BE MOISTENED PRIOR TO COMPACTING. TRACKED EQUIPMENT IS RECOMMENDED.
5. EQUIPMENT AND VEHICLES SHALL BE KEPT OFF OF THE COMPACTED MATERIAL SURFACE. IF THE MATERIAL SURFACE IS DISTURBED, IT SHALL BE RE-LEVELED AND RE-COMPACTED.
6. GEOTEXTILE FILTER FABRIC: MIRAFI OR APPROVED EQUAL. ROLL FORM, NON-WOVEN, PERVIOUS BLANKET OR CLOTH OF GLASS FIBER OR POLYESTER, RESISTANT TO ULTRAVIOLET AND HEAT DETERIORATION; WILL NOT SUPPORT MARINE OR BIOLOGICAL GROWTH.

NO DUMPING
THIS DRAINS TO OCEAN

INFILTRATION TRENCH (9)
NTS

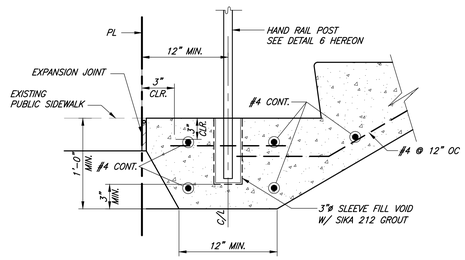

PIPE RAIL EMBEDMENT (5)
NTS

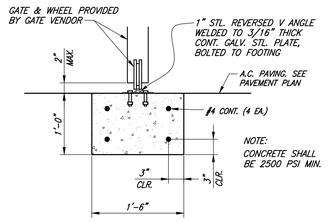

CONCRETE FOOTING

CONCRETE FOOTING AT VEHICULAR GATE TRACK (2)

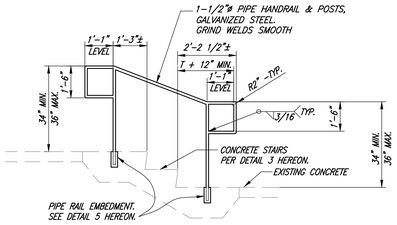

HANDRAIL AT CONCRETE STAIRS (6)
NTS

BUILDING DRAINAGE PLAN
APPROVED
jzhang
09/03/2024 10:43:49 AM
BUILDING AND SAFETY DIVISION
LA COUNTY DEPARTMENT OF PUBLIC WORKS

Barbara L. Hall, P.E., Inc.
318 West Evergreen Avenue
Monrovia, CA 91016
Phone: (626) 256-3220
Fax: (626) 256-3218

LCDG
La Cañada Design Group
Architecture
Planning
Interiors
630 N. Rosemead Boulevard, Suite 400
Pasadena, California 91107
(626) 351-4301 FAX (626)351-4302
www.lcdg.com

Registration

Client Name
COUNTY OF LOS ANGELES PUBLIC WORKS

Project Title
DEPARTMENT OF ANIMAL CARE AND CONTROL HEADQUARTERS FENCING PROJECT

Project Address
5898 Cherry Ave
Long Beach, CA 90805

SPEC #: 7856

INTERIM REVIEW DOCUMENTS

Interim review documents are incomplete and not to be used for regulatory approval, permit, or construction.

NOT FOR CONSTRUCTION

La Cañada Design Group expressly reserves its common law copyright and other property rights in these plans. These plans are not to be reproduced, changed or copied in any form or manner whatsoever, nor are they to be assigned to a third party without first obtaining the written permission and consent of La Cañada Design Group. The owner agrees to hold harmless and indemnify La Cañada Design Group against all damages, claims and losses arising out of any reuse of the plans and specifications without the authorization of La Cañada Design Group.

Milestones	Date
CD 50%	9/25/23
CD 90%	1/9/24
BACK CHECK 1	7/2/24

Revisions No.	Description	Date

Drawn by RS
Reviewed by BLH

Plot date: 8/20/2024 10:23:54 AM

LCDG Job Number: 646.31

Sheet Title
DETAILS

Sheet Number
C4.03

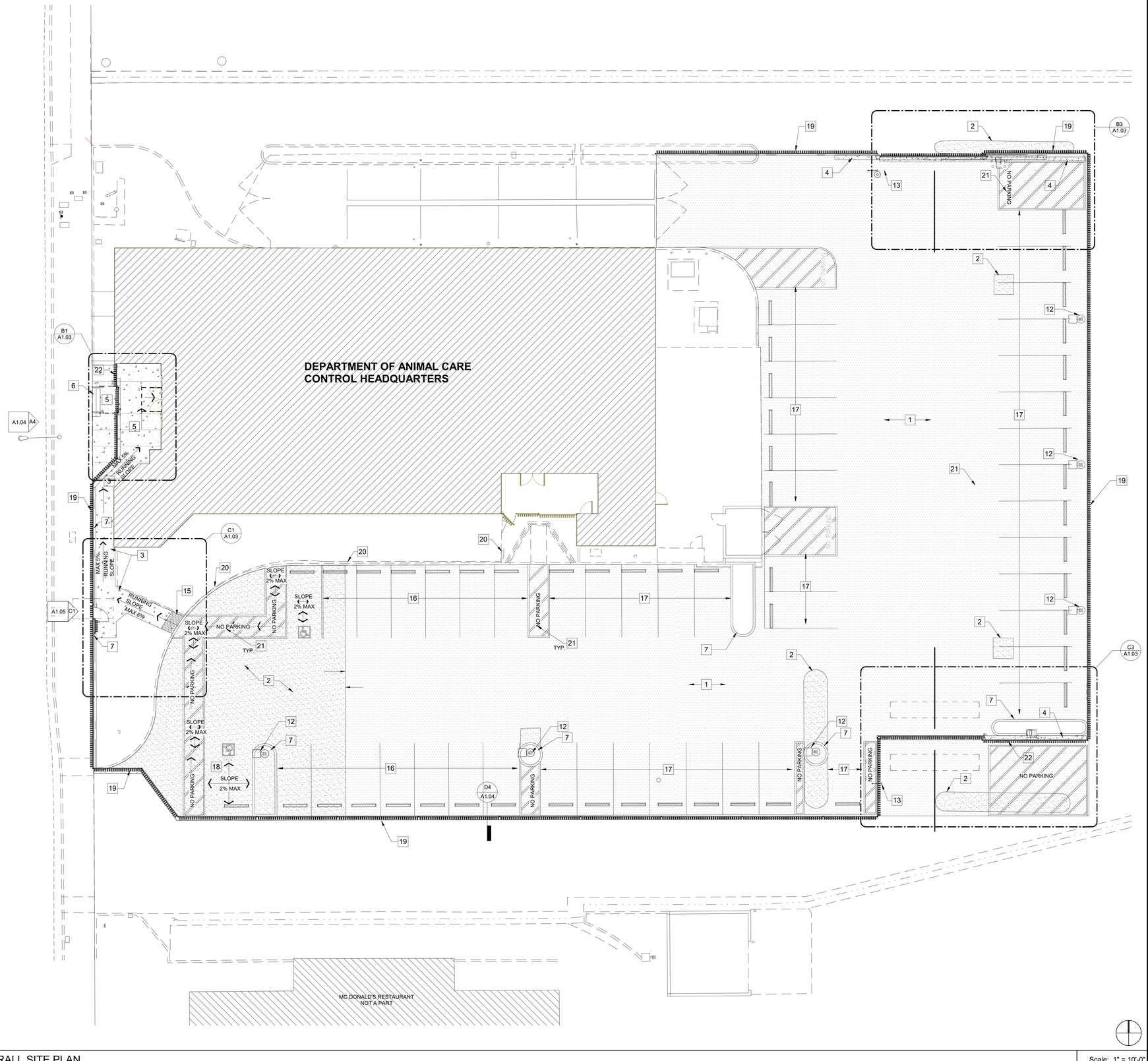

D1 OVERALL SITE PLAN

Scale: 1" = 10'-0"

SITE PLAN KEYNOTES

1	ASPHALT PAVING WITH BASE. REF CIVIL PLANS TYP.
2	REGRADE SLOPE WITH AC PAVING & BASE. REF CIVIL PLANS, TYP.
3	CONCRETE SLOPE, TYP. REF CIVIL PLANS, TYP.
4	CONCRETE GATE TRACK FOOTING. REF CIVIL PLANS, TYP.
5	REGRADE SLOPE WITH CONCRETE PAVING & BASE. REF CIVIL PLANS, TYP.
6	CONRETE STEPS. REF CIVIL PLANS, TYP.
7	CONCRETE CURB. REF CIVIL PLANS, TYP.
12	CONCRETE BASE WITH LIGHT POLE & FIXTURE. REF CIVIL & ELECTRICAL PLANS, TYP.
13	STANDARD GOOSENECK MOUNTING POST ACCESS CONTROL WITH REMOTE RFID CAPABILITIES . REF WITH ELECTRICAL PLANS, TYP.
15	TRUNCATED DOMES, TYP. REF CIVIL PLANS, TYP.
16	COMPACT STALLS 8'-6"X18', TYP. REF CIVIL PLANS, TYP.
17	STANDARD STALLS 9'X18'. REF CIVIL PLANS, TYP.
18	VAN PARKING STALL 12'X18'. REF CIVIL PLANS, TYP.
19	8'H PRE-GALVANIZED STEEL SECURITY FENCE WITH GAUNTLET STYLE SPEARS FACING OUT, TYP. REF TO SPECS, TYP.
20	(E) STEEL FENCE TO REMAIN. PROTECT IN-PLACE, TYP.
21	"NO PARKING" LETTERING PAVEMENT MARKINGS, TYP. REF DETAIL A1/A1.04.
22	KNOX BOX - FENCE MOUNTED PER MANUFACTURES SPECS. MOUNTING HEIGHTS TO BE APPROVE BY FIRE DEPARTMENT JURISDICTION

SITE PLAN GENERAL NOTES

1. NOTED ITEMS ARE NEW UNLESS INDICATED AS EXISTING, SALVAGE OR DEMOLISH.
2. SEE G1.00 FOR TYPICAL ABBREVIATIONS .
3. DIMENSIONS ARE TO FACE OF VERTICAL WALL OR FRONT OF STEEL POST OF RAIL AND END OF STRIPPING U.N.O. FOR ADDITIONAL DIMENSIONS REFER TO ENLARGED PLANS.
4. SAWCUT PAVEMENT FOR ELECTRICAL UNDERGOUND CONDUITS, DUCT BANKS, PULL-BOXES, IN-GROUND SURFACE MOUNT GOOSE-NECK STANDARD CARD READERS, UNDERGROUND LOOPS, LOOP DETECTOR & LEAD-IN WIRES. REF TO ELECTRICAL PLANS, TYP.
5. SAWCUT PAVEMENT FOR CONCRETE STRIPS FOOTINGS FOR ROLLING GATES, CONCRETE CURBS, EQUIPMENT CONCRETE PADS, STANDARD LIGHT POLE BASE FOOTING. REF CIVIL PLANS, TYP.

SITE PLAN LEGEND

CONCRETE SLOPE

(E) BUILDING TO REMAIN, PROTECT IN-PLACE, TYP.

ACCESSIBLE PATH OF TRAVEL TO MAIN ENTRANCE

PRE-GALVANIZED STEEL SECURITY HIGH FENCE. REF SPECS, TYP.

LCDG
La Cañada Design Group
Architecture
Planning
Interiors

630 N. Rosemead Boulevard, Suite 400
Pasadena, California 91107
(626) 351-4301 FAX (626)351-4302
www.lcdg.com

Registration

Client Name
COUNTY OF LOS ANGELES PUBLIC WORKS

Project Title
DEPARTMENT OF ANIMAL CARE AND CONTROL HEADQUARTERS FENCING PROJECT

Project Address
5898 Cherry Ave
Long Beach, CA 90805

SPEC #: 7856

INTERIM REVIEW DOCUMENTS

Interim review documents are incomplete and not to be used for regulatory approval, permit, or construction.

NOT FOR CONSTRUCTION

La Cañada Design Group expressly reserves its common law copyright and other property rights in these plans. These plans are not to be reproduced, changed or copied in any form or manner whatsoever, nor are they to be assigned to a third party without first obtaining the written permission and consent of La Cañada Design Group. The owner agrees to hold harmless and indemnify La Cañada Design Group against all damages, claims and losses arising out of any reuse of the plans and specifications without the authorization of La Cañada Design Group.

Milestones	Date
CD 50%	9/25/23
CD 90%	1/9/24
BACK CHECK 1	7/2/24

Revisions

No.	Description	Date

Drawn by EH
Reviewed by RL

Plot date: 7/2/2024 10:41:09 AM

LCDG Job Number: 646.31

Sheet Title
SITE PLAN

Sheet Number
A1.02

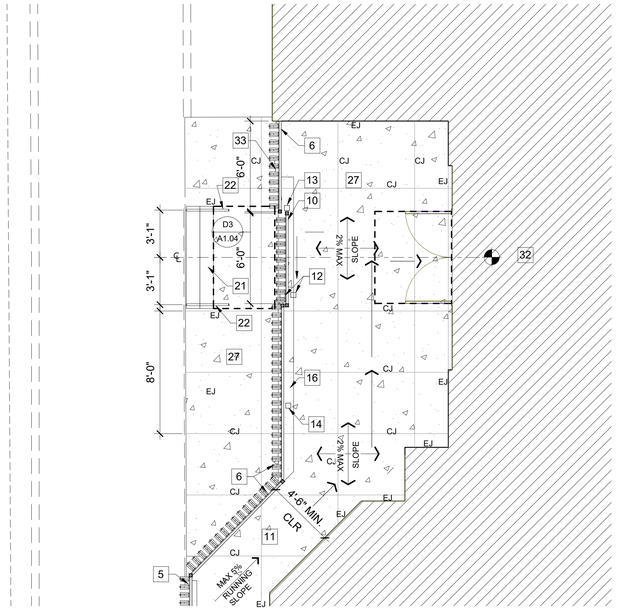

B1 ENLARGED MAIN ENTRANCE @SIDEWALK — Scale: 1/4" = 1'-0"

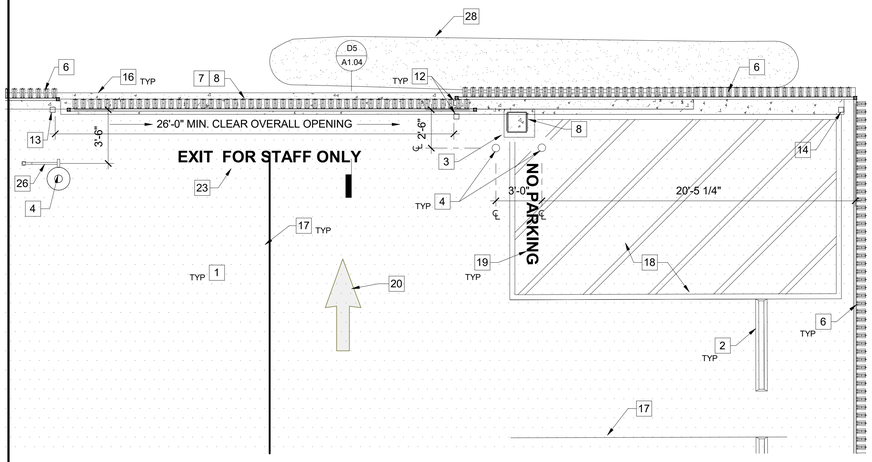

B3 ENLARGED NORTH EXIT SITE PLAN — Scale: 1/4" = 1'-0"

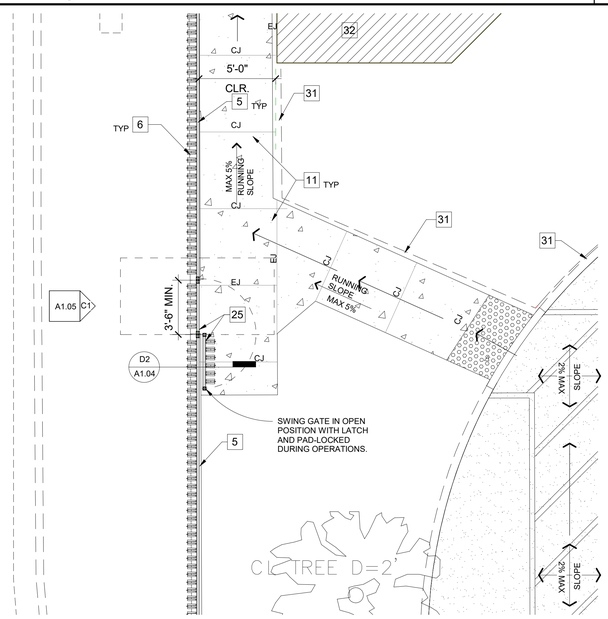

C1 ENLARGED ACCESS MAN GATE @SITEWALK — Scale: 1/4" = 1'-0"

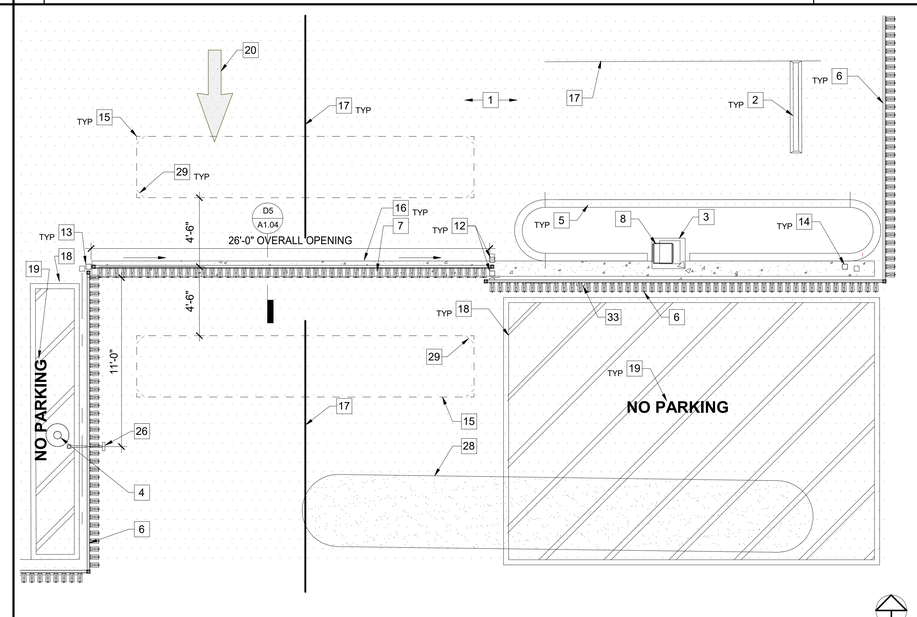

C3 02-ENLARGED SOUTH ENTRANCE PARTIAL SITE PLAN — Scale: 1/4" = 1'-0"

ENLARGED SITE PLAN NOTES

1	ASPHALT PAVING WITH BASE. REF CIVIL PLANS TYP.
2	CONCRETE WHEEL STOP. REF CIVIL PLANS, TYP.
3	21"X 24" CONCRETE PAD FOR THE MOTOR SLIDER GATE EQUIPMENT. REF CIVIL, ELECTRICAL PLANS & SPECS, TYP.
4	6" CONCRETE BOLLARDS PAINTED. REF CIVIL PLANS, TYP.
5	CONCRETE CURB. REF CIVIL PLANS, TYP.
6	8'H PRE-GALVANIZED STEEL SECURITY FENCE WITH GAUNTLET STYLE SPEARS FACING OUT, TYP. REF TO SPECS, TYP.
7	MIN. 26' WIDE X 8'H PRE-GALVANIZED STEEL SECURITY GATE WITH GAUNTLET STYLE SPEARS FACING OUT ON WHEELS. REF SPECS, TYP.
8	MOTORIZED VEHICULAR SLIDE GATE OPERATOR WITH MINIMUM OF 1 HP CAPACITY MOUNTED ON CONRETE PAD. REF CIVIL & POWER AND DATA INPUT WITH ELECTRICAL PLANS, TYP.
10	MIN. 6'-0"W X 8'H PRE-GALVANIZED STEEL SECURITY GATE WITH GAUNTLET STYLE SPEARS FACING OUT ON WHEELS.
11	CONCRETE SLOPE. REF CIVIL PLANS, TYP.
12	4" SQ. 11GA. PRE-GALVANIZED STEEL GUIDE POST. COLOR TO MATCH FENCE AND GATE, TYP. REF SPECS, TYP.
13	4" SQ. 11GA. PRE-GALVANIZED STEEL LATCH POST. COLOR TO MATCH FENCE AND GATE, TYP. REF SPECS, TYP.
14	4" SQ. 11GA. PRE-GALVANIZED STEEL END POST. COLOR TO MATCH FENCE AND GATE, TYP. REF SPECS, TYP.
15	22'W x 4'D UNDERGROUND REVERSE LOOP DETECTORS, TYP. REF CIVIL, ELECTRICAL PLANS & SPECS, TYP.
16	CONCRETE GATE TRACK FOOTING. REF CIVIL PLANS, TYP.
17	4" WHITE STRIPING, TYP. REF CIVIL PLANS, TYP.
18	4" BLUE STRIPING, TYP. REF CIVIL PLANS, TYP.
19	"NO PARKING" LETTERING PAVEMENT MARKINGS, TYP. REF DETAIL A1/A1.04.
20	PARKING LOT ARROW SIGN PAVEMENT MARKINGS, TYP. REF DETAIL D1/A1.04.
21	CONCRETE STEPS. REF CIVIL PLANS, TYP.
22	PRE-GALVANIZED TUBE STEEL HANDRAILS. REF CIVIL PLANS, TYP.
23	"EXIT FOR STAFF ONLY" LETTERING PAVEMENT MARKINGS. REF DETAIL B2/A1.04.
25	MIN.3'- 6"W X 8'H PRE-GALVANIZED STEEL SECURITY SWING GATE WITH HARDWARE LEVEL AND LOCKSETS. PICKETS TO BE GAUNTLET STYLE SPEARS FACING OUT. GATE WITH LATCH & PADLOCKED IN OPEN POSITION DURING BUSINESS HOURS.
26	STANDARD PRE-GALVANIZED TUBE STEEL POST MOUNTED ON CONCRETE PAD. REF DETAIL A2/A1.04, TYP.
27	CONCRETE PAVING & BASE. REF CIVIL PLANS, TYP.
28	AC PAVING & BASE. REF CIVIL PLANS, TYP.
29	SAWCUT PAVEMENT FOR UNDERGROUND ELECTRICAL LOOPS. REF SITE PLAN GENERAL NOTES, TYP.
31	(E) STEEL FENCE TO REMAIN. PROTECT IN-PLACE, TYP.
32	(E) BUILDING TO REMAIN. PROTECT IN-PLACE, TYP.
33	KNOX BOX - FENCE MOUNTED PER MANUFACTURES SPECS. REF SPECS.

SITE PLAN GENERAL NOTES

1. NOTED ITEMS ARE NEW UNLESS INDICATED AS EXISTING, SALVAGE OR DEMOLISH.
2. SEE G1.00 FOR TYPICAL ABBREVIATIONS .
3. DIMENSIONS ARE TO FACE OF VERTICAL WALL OR FRONT OF STEEL POST OF RAIL AND END OF STRIPING U.N.O. FOR ADDITIONAL DIMENSIONS REFER TO ENLARGED PLANS.
4. SAWCUT PAVEMENT FOR ELECTRICAL UNDERGROUND LOOPS, LOOP DETECTORS, LEAD-IN WIRES OR CABLES IN CONDUITS TO OPERATOR. REF TO ELECTRICAL PLANS, SPECS & OWNERS MANUAL, TYP.
5. SECURITY FENCE, MOTORIZED GATES WITH ASSOCIATES MOTOR EQUIPMENTS, UNDERGOUND LOOPS DETECTORS, GATES ON WHEELS, SWING GATES, STANDARD GOOSENECK POSTS, RFID ACCESS CONTROLS ALL ALL RELATED ITEMS TO BE DESIGN BUILD, TYP.

SITE PLAN LEGEND

- CONCRETE PAVING. REF CIVIL, TYP.
- AC PAVING & BASE. REF CIVIL, TYP.
- ACCESSIBLE PATH OF TRAVEL
- PRE-GALVANIZED STEEL SECURITY HIGH FENCE. REF SPECS, TYP.
- DIRECTION OF SLIDING GATE

LCDG
La Cañada Design Group
Architecture
Planning
Interiors

630 N. Rosemead Boulevard, Suite 400
Pasadena, California 91107
(626) 351-4301 FAX (626)351-4302
www.lcdg.com

Registration

Client Name
COUNTY OF LOS ANGELES PUBLIC WORKS

Project Title
DEPARTMENT OF ANIMAL CARE AND CONTROL HEADQUARTERS FENCING PROJECT

Project Address
5898 Cherry Ave
Long Beach, CA 90805

SPEC #: 7856

INTERIM REVIEW DOCUMENTS

Interim review documents are incomplete and not to be used for regulatory approval, permit, or construction.

NOT FOR CONSTRUCTION

La Cañada Design Group expressly reserves its common law copyright and other property rights in these plans. These plans are not to be reproduced, changed or copied in any form or manner whatsoever, nor are they to be assigned to a third party without first obtaining the written permission and consent of La Cañada Design Group. The owner agrees to hold harmless and indemnify La Cañada Design Group against all damages, claims and losses arising out of any reuse of the plans and specifications without the authorization of La Cañada Design Group.

Milestones	Date
CD 50%	9/25/23
CD 90%	1/9/24
BACK CHECK 1	7/2/24

Revisions

No.	Description	Date

Drawn by EH
Reviewed by RL

Plot date: 7/2/2024 11:40:03 AM

LCDG Job Number: 646.31

Sheet Title
ENLARGED SITE PLANS

Sheet Number
A1.03

1'-0" MIN.

NO PARKING

NOTES:
1. ALL STROKES TO BE MIN. 2" WIDE.
2. PROVIDE TWO (2) COATS OF WHITE TRAFFIC PAINT.
3. LOCATE SYMBOL SHOWN ON PLAN.
4. REF SPECS, TYP.

A1 NO PARKING - WHITE LETTERING — Scale: 1" = 1'-0"

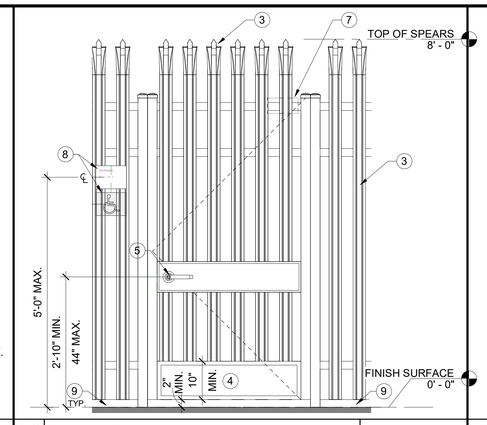

A2 SWING GATE - TYPE 3'-6" — Scale: 3/4" = 1'-0"

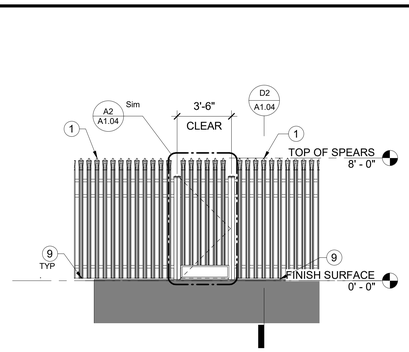

A3 ACCESS GATE ELEVATION @SIDEWALK — Scale: 1/4" = 1'-0"

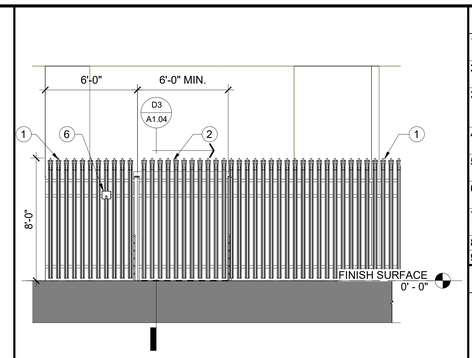

A4 WEST ELEVATION — Scale: 1/4" = 1'-0"

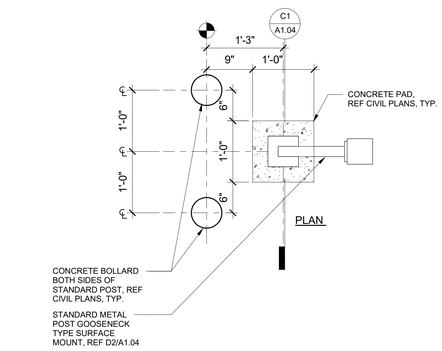

B1 GOOSENECK POST ON CONRETE PAD — Scale: 1" = 1'-0"

1'-0" MIN.

EXIT FOR STAFF ONLY

NOTES:
1. ALL STROKES TO BE MIN. 2" WIDE.
2. PROVIDE TWO (2) COATS OF WHITE TRAFFIC PAINT.
3. LOCATE SYMBOL SHOWN ON PLAN.
4. REF SPECS, TYP.

B2 EXIT FOR STAFF ONLY - WHITE LETTERING — Scale: 1" = 1'-0"

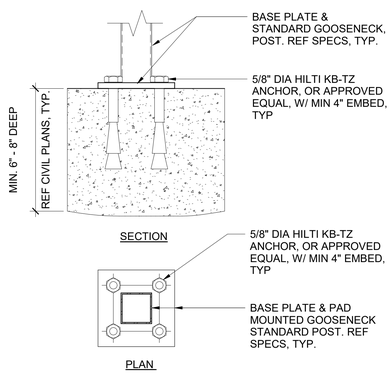

C1 GOOSENECK POST ATTACHMENT — Scale: 3" = 1'-0"

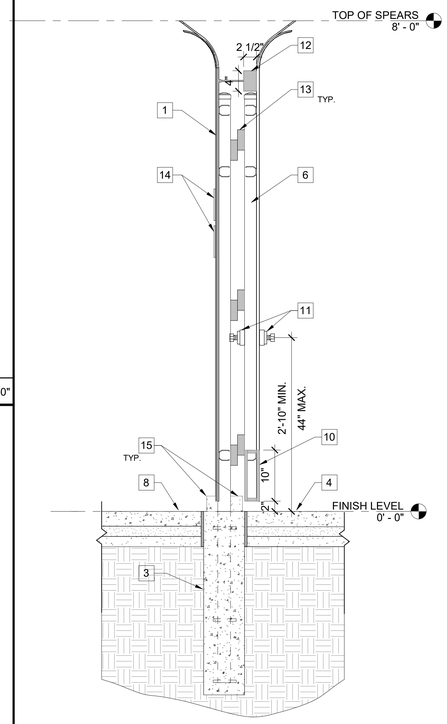

D2 ACCESS GATE SECTION — Scale: 1" = 1'-0"

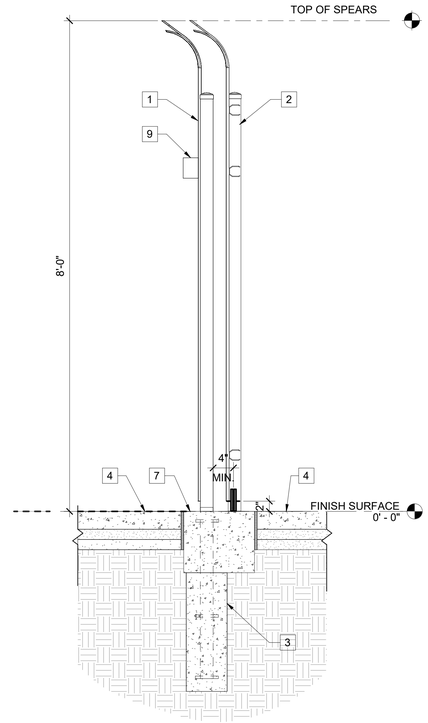

D3 FENCE SECTION @ MAIN SIDEWALK ENTRY — Scale: 1" = 1'-0"

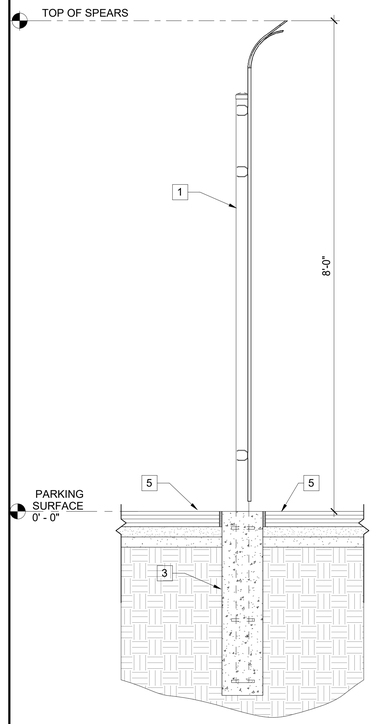

D4 FENCE SECTION @ PARKING LOT — Scale: 1" = 1'-0"

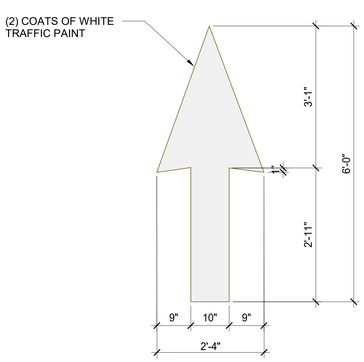

D1 PARKING LOT ARROW — Scale: 3/4" = 1'-0"

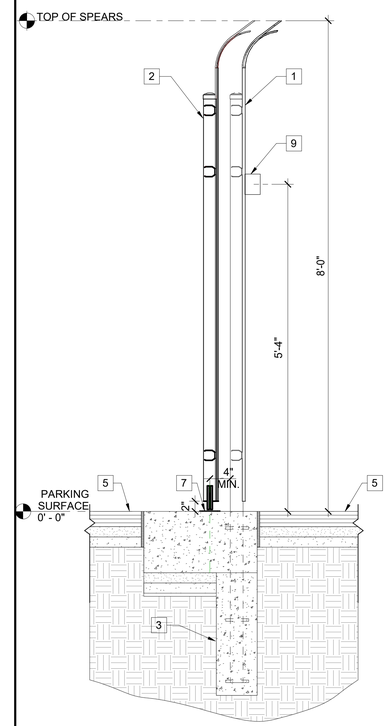

D5 SLIDING GATE SECTION @ PARKING LOT — Scale: 1" = 1'-0"

EXTERIOR ELEVATON KEYNOTES

1	8'H PRE-GALVANIZED STEEL SECURITY FENCE WITH GAUNTLET STYLE SPEARS FACING OUT, TYP.
2	8'H X 6'-0"W MIN. PRE-GALVANIZED STEEL SLIDING SECURITY GATE WITH GAUNTLET STYLE SPEARS FACING OUT ON WHEELS.
3	8'H X 3'- 6"W PRE-GALVANIZED STEEL SECURITY SWING GATE WITH HARDWARE LEVER & LOCK SET. GAUNTLET STYLE PICKET SPEARS FACING OUT. GATE TO HAVE LATCH & PADLOCK AND BE IN OPEN POSITION DURING BUSINESS HOURS.
4	MIN. 10" HIGH SOLID METAL KICK PLATES ACROSS THE WIDTH OF GATE ON BOTH SIDES TO COMPLY WITH 2022 CBC 11B-404, TYP.
5	VANDAL RESISTANCE HARDWARE LEVER WITH LOCKSET ON BOTH SIDES TO COMPLY WITH 2022 CBC 11B-404, TYP.
6	KNOX BOX - FENCE MOUNTED PER MANUFACTURES SPECS. MOUNTING HEIGHTS TO BE APPROVE BY FIRE DEPARTMENT JURISDICTION
7	VANDAL RESISTANCE HARDWARE GATE CLOSER TO COMPLY WITH 2022 CBC 11B-404, TYP.
8	SIGNAGE - REFER TO A1.05 SIGNAGE NOTES & DETAILS
9	CONCRETE CURB. REF CIVIL PLANS, TYP.

GENERAL NOTES

1. NOTED ITEMS ARE NEW UNLESS INDICATED AS EXISTING, SALVAGE OR DEMOLISH.
2. SEE G1.00 FOR TYPICAL ABBREVIATIONS .
3. DIMENSIONS ARE TO FACE OF VERTICAL WALL OR FRONT OR TOP OF STEEL ELEMENTS, POST OF RAIL AND END OF STRIPING U.N.O. FOR ADDITIONAL DIMENSIONS REFER TO ENLARGED PLANS.
4. HIGH SECURITY FENCE, MOTORIZED GATES AND ASSOCIATED MOTOR EQUIPMENTS, ELECTRICAL UNDERGOUND LOOP DETECTORS, GATES ON WHEELS, SWING GATES, STANDARD GOOSENECK POSTS, RFID ACCESS CONTROLS ALL ALL RELATED ITEMS TO BE DESIGN BUILD, TYP.

WALL SECTION KEYNOTES

1	8'H PRE-GALVANIZED STEEL SECURITY FENCE WITH GAUNTLET STYLE SPEARS FACING OUT, TYP. REF TO SPECS, TYP.
2	8'H PRE-GALVANIZED STEEL SECURITY ROLLING GATE WITH GAUNTLET STYLE SPEARS FACING OUT ON WHEELS & GUIDED BY DAISY CHAIN-LINKS POWER BY MOTOR. REF ELECTRICAL PLANS, TYP. REF SPECS, TYP.
3	MIN. 36" DEEP CONCRETE FENCE FOOTING - ACTUAL FENCE FOOTING TO BE DETERMINED BY DESIGN BUILT ENGINEERING, TYP.
4	CONCRETE PAVING & BASE. REF CIVIL PLANS, TYP.
5	ASPHALT PAVING & BASE, TYP. REF CIVIL PLANS, TYP.
6	MIN. 3'- 6"W X 8'H PRE-GALVANIZED STEEL SECURITY SWING GATE WITH VANDAL RESISTANCE HARDWARE LEVER, LOCKSET, LATCH AND PADLOCK GAUNTLET STYLE SPEARS FACING OUT. GATE TO BE IN OPEN POSITION DURING BUSINESS HOURS.
7	CONCRETE FOOTING WITH VEHICULAR GATE TRACK. REF CIVIL PLANS & DETAILS, TYP.
8	(E) CONCRETE SIDEWALK. REF CIVIL PLANS, TYP.
9	KNOX BOX - FENCE MOUNTED PER MANUFACTURES SPECS. MOUNTING HEIGHTS TO BE APPROVE BY FIRE DEPARTMENT JURISDICTION
10	MIN. 10" HIGH SOLID METAL KICK PLATES ACROOS THE WIDTH OF GATE ON BOTH SIDES TO COMPLY WITH CBC 11B-404, TYP.
11	VANDAL RESISTANCE HARDWARE LEVER WITH LOCKSET ON BOTH SIDES TO COMPLY WITH 2022 CBC 11B-404, TYP.
12	VANDAL RESISTANCE HARDWARE GATE CLOSER TO COMPLY WITH 2022 CBC 11B-404, TYP.
13	VANDAL RESISTANCE HARDWARE GATE HINGES MINIMUM OF 3 TO COMPLY WITH 2022 CBC 11B-404, TYP.
14	SIGNAGE - REFER TO A1.05 SIGNAGE NOTES & DETAILS
15	CONCRETE CURB BEYOND. REF CIVIL PLANS, TYP.

LCDG
La Cañada Design Group
Architecture
Planning
Interiors

630 N. Rosemead Boulevard, Suite 400
Pasadena, California 91107
(626) 351-4301 FAX (626)351-4302
www.lcdg.com

Registration

Client Name
COUNTY OF LOS ANGELES PUBLIC WORKS

Project Title
DEPARTMENT OF ANIMAL CARE AND CONTROL HEADQUARTERS FENCING PROJECT

Project Address
5898 Cherry Ave
Long Beach, CA 90805

SPEC #: 7856

INTERIM REVIEW DOCUMENTS

Interim review documents are incomplete and not to be used for regulatory approval, permit, or construction.

NOT FOR CONSTRUCTION

La Cañada Design Group expressly reserves its common law copyright and other property rights in these plans. These plans are not to be reproduced, changed or copied in any form or manner whatsoever, nor are they to be assigned to a third party without first obtaining the written permission and consent of La Cañada Design Group. The owner agrees to hold harmless and indemnify La Cañada Design Group against all damages, claims and losses arising out of any reuse of the plans and specifications without the authorization of La Cañada Design Group.

Milestones	Date
CD 50%	9/25/23
CD 90%	1/9/24
BACK CHECK 1	7/2/24

Revisions

No.	Description	Date

Drawn by EH
Reviewed by RL

Plot date: 7/2/2024 10:41:32 AM

LCDG Job Number: 646.31

Sheet Title
ELEVATIONS, SECTIONS & DETAILS

Sheet Number
A1.04

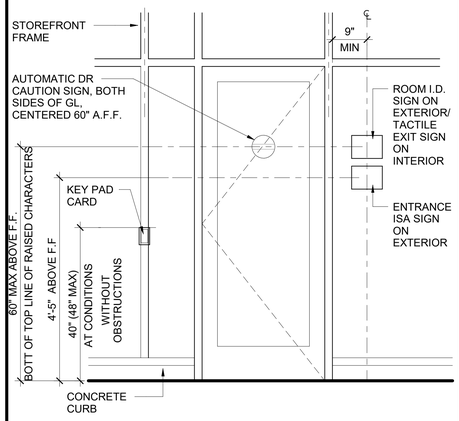

B1 ENTRANCE DOOR SIGN LOCATION

Scale: 3/4" = 1'-0"

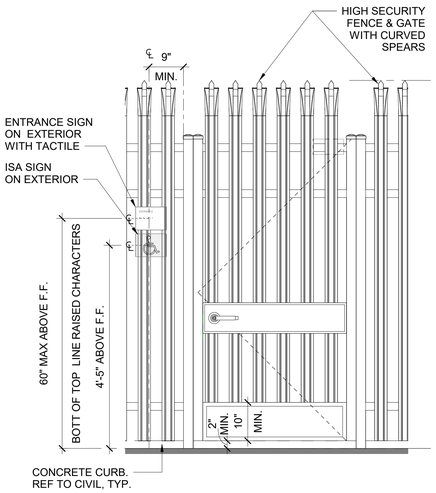

C1 ENTRANCE GATE SIGN LOCATION

Scale: 3/4" = 1'-0"

NOTES FOR RAISED CHARACTERS, BRAILLE AND VISUAL CHARACTERS:

1. RAISED CHARACTERS ON SIGNS ARE RAISED 1/32 INCH MINIMUM ABOVE BACKGROUND AND ARE SANS SERIF UPPERCASE CHARACTERS DUPLICATED IN GRADE 2 BRAILLE. RAISED CHARACTERS HEIGHT HAS A MINIMUM OF 5/8 INCH AND A MAXIMUM OF 2 INCHES HIGH BASED ON THE HEIGHT OF THE UPPERCASE LETTER "I" PER CBC SECTION 11B-703.2.5. RAISED CHARACTERS AND THEIR BACKGROUND HAVE NON-GLARE FINISH AND CONTRAST WITH THEIR BACKGROUND WITH EIGHT LIGHT CHARACTERS ON A DARK BACKGROUND OR DARK CHARACTERS ON A LIGHT BACKGROUND PER CBC SECTION 11B-703.5.1.
2. RAISED CHARACTER PROPORTION ARE SELECTED FROM FONTS WHERE WIDTH OF UPPERCASE LETTER "O" IS 60 PERCENT MINIMUM AND 110 PERCENT MAXIMUM OF HEIGHT OF UPPERCASE LETTER "I". STROKE THICKNESS OF UPPERCASE LETTER "I" SHALL BE 15 PERCENT MAXIMUM HEIGHT OF THE CHARACTER PER CBC SECTIONS 11B-703.2.4 AND 11B-703.2.6
3. SPACING BETWEEN INDIVIDUAL RAISED CHARACTERS COMPLY WITH CBC SECTION 11B-703.2.7 AND 11B703.2.8. TEXT HAS A HORIZONTAL FORMAT PER CBC SECTION 11B-703.2.9.
4. CALIFORNIA GRADE 2 BRAILLE COMPLY WITH CBC SECTIONS 11B-703.3 AND 11B-703.4. BRAILLE DOTS HAVE A DOMED OR ROUNDED SHAPE COMPLYING WITH CBC TABLE AND FIGURE 11B-703.3.1.

EDGES AND VERTICES ON GEOMETIC SYMBOLS PER CBC FIGURE 11B-703.7.2.6.4:

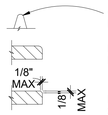

5. TACTILE CHARACTERS SHALL BE LOCATED 48 INCHES MINIMUM TO THE BASELINE OF THE LOWEST BRAILLE CELLS AND 60 INCHES MAXIMUM TO THE BASELINE OF THE HIGHEST LINE OF RAISED CHARACTERS ABOVE THE FINISH FLOOR OR GROUND SURFACE. CBC SECTION AND FIGURE 11B-703.4.1. TACTILE SIGNS SHALL BE LOCATED PER CBC SECTION AND FIGURE 11B-703.4.2 AS FOLLOWS:
   - ALONGSIDE A SINGLE DOOR AT THE LATCH SIDE
   - ON THE INACTIVE LEAF AT DOUBLE DOORS WITH ONE ACTIVE LEAF
   - TO THE RIGHT OF THE RIGHT HAND DOOR AT DOUBLE DOORS WITH TWO ACTIVE LEAFS
   - ON THE NEAREST ADJACENT WALL WHERE THERE IS NO WALL SPACE AT THE LATCH SIDE OF A SINGLE DOOR OR AT THE RIGHT SIDE OF DOUBLE DOORS WITH TWO ACTIVE LEAFS
   - A CLEAR FLOOR SPACE OF 18"X18" MINIMUM, CENTERED ON THE TACTILE CHARACTERS, IS PROVIDED BEYOND THE ARC OF ANY DOOR SWING BETWEEN THE CLOSED POSITION AND 45 DEGREE OPEN POSITION
6. VISUAL CHARACTERS SHALL BE 40 INCHES MINIMUM ABOVE FINISH FLOOR OR GROUND. VISUAL CHARACTERS HEIGHT SHALL BE DETERMINED BASED UPON HEIGHT ABOVE GROUND AND HORIZONTAL VIEWING DISTANCE PER CBC TABLE 11B-703.5.5
7. VISUAL CHARACTER PROPORTION WHERE WIDTH OF THE UPPERCASE LETTER "O" IS 60 PERCENT MINIMUM AND 110 PERCENT MAXIMUM OF THE HEIGHT OF THE UPPERCASE LETTER "I". STROKE THICKNESS SHALL BE 10 PERCENT MINIMUM AND 20 PERCENT MAXIMUM OF THE HEIGHT OF THE CHARACTER. CBC SECTIONS 11B-703.5.4 AND 11B-703.5.7
8. PICTOGRAMS COMPLY WITH CBC SECTION 11B-703.6
9. SYMBOLS OF ACCESSIBILITY COMPLY WITH CBC SECTION 11B-703.7
10. VARIABLE MESSAGE SIGNS COMPLY WITH CBC SECTION 11B-703.8.

C2 SIGNAGE NOTES

Scale: 3" = 1'-0"

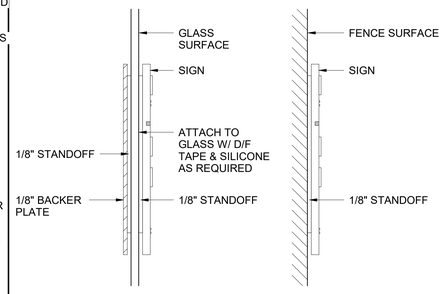

SIDE VIEW - GLASS CONDITION

SIDE VIEW - WALL CONDITION

A3 SIGN ATTACHMENT

Scale: 6" = 1'-0"

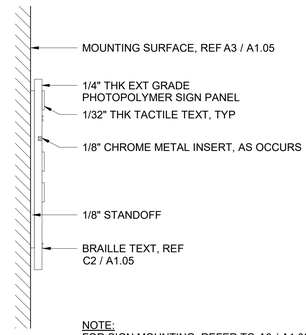

NOTE:
FOR SIGN MOUNTING, REFER TO A3 / A1.05

A4 SIGN SECTION

Scale: 6" = 1'-0"

BRAILLE SIZE AND SPACING REQUIREMENTS PER CBC FIGURE 11B-703.3.1:

BRAILLE DIMENSIONS

MEASUREMENT RANGE	MINIMUM IN INCHES MAXIMUM IN INCHES
Dot base diameter	0.059 (1.5 mm) to 0.063 (1.6 mm)
Distance between two dots in the same cell	0.100 (2.5 mm)
Distance between corresponding dots in adjacent cells	0.300 (7.6 mm)
Dot height	0.025 (0.6 mm) to 0.037 (0.9 mm)
Distance between corresponding dots from one cell directly below	0.395 (10 mm) to 0.400 (10.2 mm)
1. Measured center to center	

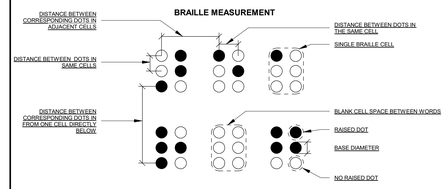

A5 SIGN BRAILLE REQUIREMENTS

Scale: No Scale

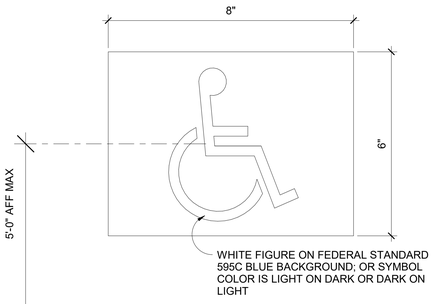

NOTES:
1. COLORS AND PICTOGRAM REQUIREMENTS SHALL COMPLY WITH INTERNATIONAL SYMBOL OF ACCESSIBILITY
2. FOR SIGN MOUNTING, REF A3 / A1.05
3. FOR SIGN LOCATION, REF D2 / A1.05

B3 ENTRANCE SIGN ISA

Scale: 6" = 1'-0"

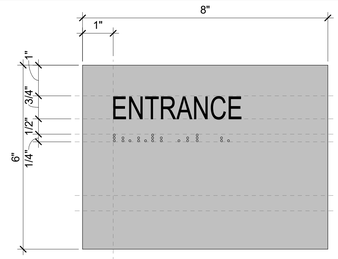

NOTE:
1. GATE MOUNTED BRAILLE SIGNAGE TO BE LOCATED ON LATCH SIDE OF GATE CLEAR OF DOOR-SWING. REF D2 / A1.05
2. FOR ADDITIONAL INFORMATION SEE NOTES ON C2 / A1.05
3. FOR SIGN MOUNTING, REF A3 / A1.05
4. SEE SIGN SECTION ON A4 / A1.05 (SIM)

B4 TACTILE ENTRANCE SIGN

Scale: 6" = 1'-0"

LCDG
La Cañada Design Group
Architecture
Planning
Interiors

630 N. Rosemead Boulevard, Suite 400
Pasadena, California 91107
(626) 351-4301 FAX (626)351-4302
www.lcdg.com

Registration

Client Name
COUNTY OF LOS ANGELES PUBLIC WORKS

Project Title
DEPARTMENT OF ANIMAL CARE AND CONTROL HEADQUARTERS FENCING PROJECT

Project Address
5898 Cherry Ave
Long Beach, CA 90805

SPEC #: 7856

INTERIM REVIEW DOCUMENTS

Interim review documents are incomplete and not to be used for regulatory approval, permit, or construction.

NOT FOR CONSTRUCTION

La Cañada Design Group expressly reserves its common law copyright and other property rights in these plans. These plans are not to be reproduced, changed or copied in any form or manner whatsoever, nor are they to be assigned to a third party without first obtaining the written permission and consent of La Cañada Design Group. The owner agrees to hold harmless and indemnify La Cañada Design Group against all damages, claims and losses arising out of any reuse of the plans and specifications without the authorization of La Cañada Design Group.

Milestones	Date
CD 50%	9/25/23
CD 90%	1/9/24
BACK CHECK 1	7/2/24

Revisions

No.	Description	Date

Drawn by: Author
Reviewed by: Checker

Plot date: 7/2/2024 10:41:35 AM

LCDG Job Number: 646.31

Sheet Title
SIGNAGE NOTES & DETAILS

Sheet Number
A1.05

ELECTRICAL EQ. SYMBOLS LIST

(hatched)	SURFACE MOUNTED/ WALL PANELBOARD
PB	ELECTRICAL PULL BOX

LOW VOLTAGE SYMBOLS LIST

CR	CARD READER: WHERE DOOR KING GATE OPERATOR IS PROVIDED PROVIDE HID SIGNO READER 40 CARD READER OR APPROVED EQUAL WITH CABLING TO OPERATOR AND ACCESS CONTROL PANEL INSIDE BUILDING.

MISC. SYMBOLS LIST

- CONDUIT SYSTEM RISER UP.
- CONDUIT SYSTEM RISER DOWN.

APPLICABLE CODES

PART 1 - 2022 CA. BUILDING CODE, TITLE 24 CCR (2018 IBC)

PART 2 - 2022 CA. BUILDING CODE, TITLE 24 CCR (2018 IBC)

PART 3 - 2022 CA. ELECTRICAL CODE, TITLE 24 CCR (2017 NEC OF THE NFPA)

PART 4 - 2022 CA. MECHANICAL CODE, TITLE 24 CCR (2018 UMC OF THE IAPMO)

PART 5 - 2022 CA. PLUMBING CODE, TITLE 24 CCR (2018 UPC OF THE IAPMO)

PART 6 - 2022 CA. ENERGY CODE, TITLE 24 CCR

PART 7 - CURRENTLY VACANT

PART 8 - 2022 CA. HISTORICAL BUILDING CODE, TITLE 24 CCR

PART 9 - 2022 CA. FIRE CODE, TITLE 24 CCR (2018 IFC OF THE ICC)

PART 10 - 2022 CA. EXISTING BUILDING CODE, TITLE 24 CCR (2018 INTERNATIONAL EXIST. BLDG. CODE OF THE ICC, WITH AMENDMENTS) PART 11 - 2019 CA. GREEN BUILDING STANDARDS CODE (CALGREEN CODE), TITLE 24 CCR

PART 12 - 2019 CA. REFERENCED STANDARDS, TITLE 24 CCR

PARTIAL LIST OF APPLICABLE STANDARDS
NFPA 72 NATIONAL FIRE ALARM CODE (CALIFORNIA AMENDED) 2013 EDITION

(NOTE: SEE UL STANDARD 1971 FOR "VISUAL DEVICES")

SCOPE OF WORK

SITE LIGHTING AND ACCESS CONTROL ADDITIONS TO PARKING AREA. PROVIDE NEW PANEL TO POWER PROPOSED GATE OPERATORS AND EXTEND EXISTING SITE LIGHTING TO PROPOSED LED POLE LIGHT LOCATIONS. PROVIDE NEW KEY PAD AND RFID CARD READER FOR GATE OPERATOR ACCESS CONTROL WITH NEW CABLING AND CONNECTIONS PER PROJECT REQUIREMENTS.

LIGHTING CONTROLS LEGEND

TS — TIME SWITCH, WALL MOUNTED, AS SPECIFIED. PROVIDE DUAL SWITCHING CAPABILITY PER TITLE 24 WHERE REQUIRED. SURFACE WALL OUTLET BOX. +48" TO TOP OF BOX, U.O.N.

LIGHT FIXTURE LEGEND

S1 — POLE MOUNTED PARKING LOT LIGHT FIXTURE

(E) EXISTING EXTERIOR WALL PACK LIGHT FIXTURE

WIRING LEGEND

- 3/4"C. 2 #10 + #10 GND.
- 3/4"C. 3#10, + #10 GND.
- 3/4"C. 4#10, + #10 GND.
- 1"C. 5 #10 + #10 GND.
- 1"C. 6 #10 + #10 GND.
- 1-1/4"C. 7 #10 + #10 GND.
- 1-1/4"C. 8 #10 + #10 GND.
- CONDUIT: EXPOSED IN UNFINISHED AREA; CONCEALED ABOVE CEILING OR IN WALL IN FINISHED AREAS.
- CONDUIT: IN OR BELOW FLOOR OR BELOW GRADE. SIZE & NUMBER OF CONDUCTORS AS NOTED.
- A-1,3,5 — HOMERUN TO PANEL "A", CIRCUITS 1,3,5. EQUIPMENT GROUNDING CONDUCTOR IS NOT REPRESENTED IN THE CROSS MARKS BUT IS TO BE INCLUDED IN ALL RACEWAYS. (NO CROSS LINES INDICATE (2)#12 + #12 GROUND.)

GENERAL NOTES

1. CONSULT WITH THE OWNER AUTHORIZED REPRESENTATIVE (OAR) PRIOR STARTING WORK.
2. THE CONTRACTOR SHALL USE SUFFICIENT BARRICADES AND TEMPORARY PROTECTION DEVICES TO PREVENT PEDESTRIANS OR NON-AUTHORIZED PERSONNEL ACCESS TO ANY OPEN TRENCHES OR CONSTRUCTION ACTIVITY. THE CONTRACTOR SHALL ERECT A SAFETY BARRICADE AT ALL OPEN TRENCHES, DITCHES, PITS, SUMPS, ETC FOR THE PROTECTION AND SAFETY OF THE PUBLIC. ALL TRENCHES OUTSIDE OF THE BARRICADE LIMITS SHALL BE BACKFILLED AND PAVED NOT LATER THAN 72 HOURS AFTER BEING OPENED. DURING THE TIME THE TRENCHES ARE OPEN IN TRAFFIC AREAS, THE CONTRACTOR SHALL PROVIDE TRAFFIC PLATES. SAFETY BARRICADES SHALL BE PANELIZED CHAIN LINK FENCE. EACH FENCE PANEL SHALL BE 6FT TALL X 10FT WIDE WITH STAND AND TIED TOGETHER END TO END WITH A MINIMUM 8-GAUGE WIRE. NO TRENCHES SHALL BE LOCATED OUTSIDE BARRICADES.
3. THE REPRESENTATION OF PHYSICAL PLACEMENT OF EXISTING UNDERGROUND CONDUITS HAS BEEN DEVELOPED FROM THE BEST INFORMATION AVAILABLE TO THE OWNER AT THE TIME THE DRAWINGS WERE PREPARED. THE OWNER PROVIDES THIS ONLY AS A GENERAL GUIDELINE FOR THE CONVENIENCE OF BIDDERS/CONTRACTORS AND DOES NOT PROVIDE A GUARANTEE OR WARRANTY IN ANY WAY EXPRESS OR IMPLIED, AS TO THE ACCURACY OF THESE REPRESENTATIONS. NOTHING IN THIS DISCLAIMER AFFECTS IN ANY WAY THE DUTY OF THE CONTRACTOR TO FURNISH ACCURATE "AS BUILT" DRAWINGS AFTER THE COMPLETION OF THE CONTRACT.
4. ALL FEEDERS AND BRANCH CIRCUITS SHALL CARRY A GROUND WIRE, SIZED AS PER N.E.C. ARTICLE 250.
5. REFER TO THE PLANS FOR ADDITIONAL REQUIREMENTS AND EQUIPMENT AND MATERIAL APPROVED FOR USE UNDER THIS CONTRACT.
6. PRIOR TO PULLING ANY CONDUCTORS, CLEAN AND MANDREL ALL CONDUITS.
7. CONTRACTOR SHALL INSTALL EQUIPMENT PER ADA (AMERICAN DISABILITIES ACT) REQUIREMENTS.
8. EXTERIOR EQUIPMENT, JUNCTION BOXES, ENCLOSURES AND CONNECTIONS SHALL BE WEATHERPROOF TYPE SUITABLE FOR EXTERIOR INSTALLATION.(MALLEABLE IRON FITTINGS).
9. IN THE EVENT THAT CERTAIN FEATURES OF THE CONSTRUCTION.
10. ARE NOT FULLY SHOWN ON THE CONSTRUCTION DOCUMENTS, THE FEATURES SHALL BE OF THE SAME CHARACTER AS SIMILAR CONDITIONS THAT ARE SHOWN.
11. ALL DIMENSIONS, ELEVATIONS AND EXISTING CONDUITS SHALL BE ON THE SITE BY GENERAL CONTRACTOR, AND EACH SUB-CONTRACTOR BEFORE THE WORK BEGINS. ALL DISCREPANCIES SHALL BE BROUGHT TO THE OAR'S ATTENTION BEFORE CONSTRUCTION BEGINS.
12. THE ENGINEER HAS PREPARED THESE DOCUMENTS ONLY FOR IMPROVEMENTS SPECIFIED, DETAILED OR SHOWN AS NEW WORK, AND ASSUMES NO RESPONSIBILITY FOR OTHER CONSTRUCTION, MATERIAL OR EQUIPMENT NOTED AS "PROVIDED BY OTHERS".
13. DEMOLITION AND/OR REMOVAL OF ELECTRICAL EQUIPMENT SHALL BE THE RESPONSIBILITY OF THE ELECTRICAL CONTRACTOR. ALL REMOVED EQUIPMENT NOT TO BE REUSED SHALL BE RETURNED TO OWNER OR AS DIRECTED BY THE OWNER INSPECTOR.
14. ALL JUNCTION BOX COVER PLATES FOR BRANCH CIRCUIT SYSTEM SHALL BE CLEARLY MARKED WITH PERMANENT INK FELT PEN IDENTIFYING THE BRANCH CIRCUIT (BOTH PANEL NUMBER AND CIRCUIT NUMBER) CONTAINED IN THE BOX.
15. THE CONTRACTOR SHALL MAINTAIN THE UNIFORMITY AND CONTINUITY OF THE GROUNDING SYSTEM IN ALL CONDUITS/RACEWAYS.
16. TEST THE ENTIRE SYSTEM TO DEMONSTRATE TO THE OAR THAT THE ELECTRICAL COMPONENTS AND SPECIAL SYSTEMS ARE COMPLETE AND FUNCTION PROPERLY. MAKE NECESSARY CORRECTIONS AND LEAVE SYSTEMS READY FOR OPERATION.
17. DRAWINGS ARE ESSENTIALLY DIAGRAMMATIC AND THE SIZE AND LOCATION OF EQUIPMENT IS INDICATED TO SCALE WHENEVER POSSIBLE. COORDINATE LOCATION AND LAYOUT WITH OTHER WORK. CONTRACTOR SHALL PROVIDE TO THE ENGINEER A 1/4"=1'-0" OF SCALED DRAWING OF ELECTRICAL EQUIPMENT ROOMS SHOWING LOCATION AND CLEARANCES OF SUBMITTED EQUIPMENT FOR REVIEW AND APPROVAL PRIOR TO ORDERING OF ELECTRICAL EQUIPMENT.
18. PROVIDE HANGERS, SUPPORTS, SEISMIC RESTRAINTS AND/ OR BRACING FOR ALL EQUIPMENT, CONDUIT, AND LIGHTING FIXTURES TO SUSTAIN VERTICAL LOADS AND RESIST HORIZONTAL FORCES IN ANY DIRECTION TO COMPLY WITH 2016 EDITION OF TITLE 24, PART 2, CALIFORNIA BUILDING CODE, CHAPTER 16, TABLE 16A AND ASSOCIATED NOTES.
19. PER CEC 300-21, "OPENINGS AROUND ELECTRICAL PENETRATIONS THROUGH FIRE-RESISTANT-RATED WALLS, PARTITIONS, FLOORS, CEILINGS SHALL BE FIRESTOPPED USING APPROVED METHODS TO MAINTAIN THE FIRE RESISTANCE RATING."
20. ALL CONDUCTORS FOR FEEDERS AND BRANCH CIRCUITS SHALL BE COPPER, TYPE THWN/THHN, RATED FOR 75°C. SIZES #12 AWG MAY BE SOLID OR STRANDED, #10 AND LARGER SHALL BE STRANDED. PROVIDE 75°C RATED AND APPROVED TERMINATION FOR ALL CONDUCTORS.
21. ALL ELECTRICAL WORK SHALL BE PER THE APPLICABLE CEC CODE. CONTRACTOR SHALL INCLUDE IN HIS BID ALL REQUIRED LABOR, MATERIAL, EXPERTISE AND QUALIFIED PERSONNEL TO COMPLETELY INSTALL IN A CODE COMPLIANT MANNER, ALL WORK SHOWN ON THE PLANS.
22. WHEN THERE ARE DISCREPANCIES BETWEEN CONTRACT DOCUMENTS (DRAWINGS), OBTAIN CLARIFICATION FROM THE ENGINEER PRIOR TO BID. FOR BIDDING PURPOSES THE MORE STRINGENT OR MORE EXPENSIVE REQUIREMENT(S) SHALL APPLY.
23. DURING CONSTRUCTION, THE CONTRACTOR SHALL MAINTAIN A DAILY RECORD OF ALL DEVIATIONS FROM THE BID DRAWINGS. ALL DIMENSIONS AND OTHER INFORMATION NECESSARY TO COMPLETELY EXPLAIN AND LOCATE ALL ELEMENTS OF THESE DEVIATIONS SHALL BE RECORDED. UPON COMPLETION OF WORK, THE CONTRACTOR SHALL SUBMIT TO THE OWNER, ONE COMPLETE SET OF REPRODUCIBLE DRAWINGS CORRECTED TO REFLECT "AS-BUILT" CONDITIONS OF THE WORK.
24. ANY SUBMITTALS FOR EQUIPMENT DIFFERENT FROM THE
25. SPECIFIED ITEMS SHOWN ON THE PLANS SHALL BE
26. ACCOMPANIED BY CUT SHEETS FOR THE ORIGINAL
27. SPECIFIED ITEM(S). SUBMITTALS WITHOUT THE SPECIFIED
28. CUT SHEETS WILL BE REJECTED AS INCOMPLETE.
29. "PROVIDE" SHALL BE DEFINED AS: FURNISH AND INSTALL.
30. ALL MATERIALS, EQUIPMENT, CONDUIT AND WIRING SHALL BE NEW AND PROVIDED BY THE CONTRACTOR. REFER TO THE PLANS FOR ADDITIONAL REQUIREMENTS FOR EQUIPMENT AND MATERIAL APPROVED FOR USE UNDER THIS CONTRACT.
31. ALL DIMENSIONS AND ELEVATIONS SHALL BE CHECKED AND VERIFIED ON THE SITE BY THE GENERAL CONTRACTOR AND EACH SUBCONTRACTOR BEFORE THE WORK BEGINS. ALL PERCEIVED ERRORS, OMISSIONS AND DISCREPANCIES SHALL BE BROUGHT TO THE ENGINEER'S ATTENTION BEFORE CONSTRUCTION BEGINS.
32. PROVIDE ELECTRICAL PANELS WITH TYPEWRITTEN "AS-BUILT" PANEL SCHEDULE. PANEL SCHEDULE SHALL INCLUDE LOCATION, QUANTITY AND TYPE OF DEVICES SERVED. PANEL SCHEDULE SHALL BE REVISED AS REQUIRED TO REFLECT REMOVED OR DEMOLISHED CIRCUITS.
33. THE SEISMIC ANCHORAGE OF ELECTRICAL EQUIPMENT SHALL CONFORM TO C.C.R. 2007 CHAPTER 16 AND ASCE 7-05 CHAPTER 13.
34. CONTRACTOR SHALL SUBMIT A CALCULATIONS AND DETAILS FOR APPROVAL WHEN USING AN INSTALLATION METHOD NOT COVERED UNDER ANY OF THE STRUCTURAL DRAWINGS STANDARD DETAILS.
35. ALL WORK SHALL BE DONE IN ACCORDANCE WITH LATEST APPLICABLE CODES AND REGULATIONS PER CALIFORNIA AND OTHER AUTHORITIES HAVING JURISDICTION.
36. ALL MATERIALS, EQUIPMENT, CONDUIT AND WIRING SHALL BE NEW AND PROVIDED BY THE CONTRACTOR. REFER TO THE SPECIFICATIONS FOR ADDITIONAL REQUIREMENTS FOR EQUIPMENT AND MATERIAL APPROVED FOR USE UNDER THIS CONTRACT.
37. WIRING FOR ALL LOW VOLTAGE SYSTEMS SHALL BE ENCLOSED IN CONDUIT AND/OR RACEWAY.
38. ALL DIMENSIONS AND ELEVATIONS SHALL BE CHECKED AND VERIFIED ON THE SITE BY THE GENERAL CONTRACTOR AND EACH SUBCONTRACTOR BEFORE THE WORK BEGINS. ALL PERCEIVED ERRORS, OMISSIONS AND DISCREPANCIES SHALL BE BROUGHT TO THE ENGINEER'S ATTENTION BEFORE CONSTRUCTION BEGINS.
39. ALL RACEWAYS INSIDE OF BUILDING SHALL BE CONCEALED. INCLUDE ALL REQUIRED DEMOLITION, CUTTING, PATCHING AND FINISH TO MATCH EXISTING INSTALLATION AS REQUIRED TO INSTALL NEW CONDUIT AND RACEWAYS IN EXISTING BUILDING.
40. ALL CONDUIT PENETRATIONS THROUGH FIRE-RATED FLOOR SLABS, SHAFTS AND WALLS SHALL BE SEALED AGAINST THE SPREAD OF FIRE OR SMOKE WITH APPROVED CABLE & CONDUIT FIRE STOPS OR FIRE RESISTANT SEALANT TO GIVE THE EQUIVALENT FIRE RATING OF THE STRUCTURE BEFORE THE PENETRATION. ALL OTHER NON-RATED PENETRATIONS OF STRUCTURES SHALL BE SEALED.
41. EXPOSED AND CONDUITS ABOVE T-BAR CEILINGS SHALL BE INSTALLED PARALLEL TO OR AT RIGHT ANGLES TO EXISTING BEAMS OR WALLS. EXPOSED CONDUITS UP TO 7'-0" ABOVE FINISH FLOOR SHALL BE RIGID GALVANIZED STEEL AND ABOVE 7'-0" MAY BE EMT.
42. PROVIDE ELECTRICAL PANELS WITH TYPEWRITTEN "AS-BUILT" PANEL SCHEDULE. PANEL SCHEDULE SHALL INCLUDE LOCATION, QUANTITY AND TYPE OF DEVICES SERVED.
43. PROVIDE ELECTRICAL PANELS WITH ENGRAVED NAMEPLATE ON OUTSIDE OF PANEL ABOVE DOOR OPENING.
44. SUPPORT CONDUIT 2-1/2 INCH TRADE SIZE OR SMALLER WITH U.L. LISTED CLAMPS AND HANGERS IN ACCORDANCE WITH SMACNA STANDARDS.
45. EQUIPMENT SPECIFIED ON THESE DRAWING ARE BASIS OF DESIGN
46. CONTRACTOR SHALL ASSUME FULL RESPONSIBILITY FOR ALL ADDITIONAL DESIGN AND CONSTRUCTION COSTS INCURRED BY THE USE OF ANY PRODUCT OTHER THAN THE BASIS OF DESIGN.
47. PROVIDE BREAKERS TIES TO BREAKERS FEEDING MULTI WIRE RUNS.
48. THESE PLANS ARE DIAGRAMMATIC, CONDUIT EXACT ROUTING, BOXES, FASTENERS, ETC. ARE CONSIDERED AS PART OF THE MEANS AND METHODS THAT THE CONTRACTOR IS USING TO PROVIDE AN OPERABLE AND APPROVED INSTALLATION
49. ALL ELECTRICAL WORK SHALL BE DESIGNED PER 2017 LOS ANGELES COUNTY ELECTRICAL CODE, 2016 CALIFORNIA ELECTRICAL CODE, 2014 NATIONAL ELECTRICAL CODE AND 2016 BUILDING ENERGY EFFICIENCY STANDARDS.
50. 110.2 APPROVAL: ALL ELECTRICAL EQUIPMENT SHALL BE LABELED, LISTED OR CERTIFIED BY A NATIONALLY RECOGNIZED TESTING LABORATORY ACCREDITED BY THE UNITED STATES OCCUPATIONAL SAFETY HEALTH ADMINISTRATION.
51. 130.5(c) VOLTAGE DROP: THE MAXIMUM COMBINED VOLTAGE DROP ON BOTH INSTALLED FEEDER CONDUCTORS AND BRANCH CIRCUIT CONDUCTORS TO THE FARTHEST CONNECTED LOAD OR OUTLET SHALL NOT EXCEED 5 PERCENT.

STANDARD ABBREVIATIONS

A.F.F.	ABOVE FINISHED FLOOR
A OR AMP	AMPERES
A/C	ASPHALT CONCRETE
BKR.	BREAKER
BC	BARE COPPER
C	CONDUIT
CKT.	CIRCUIT
C.O.	CONDUIT ONLY
(E)	EXISTING
(ER)	EXISTING, RELOCATED
F.O.	FIBER OPTIC
GFI,G.F.I.	GROUND FAULT INTERRUPTER
J.BOX	JUNCTION BOX
IDF	INTERMEDIATE DISTRIBUTION FRAME (COMPUTER/NETWORKING SYSTEM)
LDF	LOCAL DISTRIBUTION FRAME (COMPUTER/NETWORKING SYSTEM)
MDF	MAIN DISTRIBUTION FRAME (COMPUTER/NETWORKING SYSTEM)
M.H.	MOUNTING HEIGHT
(N)	NEW
N.I.C.	NOT IN CONTRACT
PA	PUBLIC ADDRESS
PH OR Ø	PHASE
(RR)	REMOVE AND RELOCATE
(R)	REMOVED
REV.	REVISED
RSP	REMOTE SECURITY PANEL
SLC	SIGNALING LINE CIRCUIT
SW	SWITCH
XFMR	TRANSFORMER
TVSS	TRANSIENT VOLTAGE SURGE SUPPRESSER
TYP.	TYPICAL
UFER	UFER GROUND
UG	UNDERGROUND
U.O.N.	UNLESS OTHERWISE NOTED
WM	WIREMOLD
WP	WEATHERPROOF
W.P.	WEATHERPROOF
V.L.	VERIFY LOCATION.

SHEET INDEX

E1.1	ELECTRICAL FRONT SHEET
E1.2	ELECTRICAL SINGLE LINE DIAGRAM, PANEL SCHEDULES AND LOAD CALCULATION
E1.3	ELECTRICAL LIGHT FIXTURE SCHEDULE
E2.1	ELECTRICAL SITE LIGHTING, POWER AND ACCESS PLAN
E2.2	ELECTRICAL POWER AND ACCESS FLOOR PLAN
E3.1	ELECTRICAL SITE PHOTOMETRIC CALCULATIONS
E4.1	ELECTRICAL TITLE-24 COMPLIANCE FORMS - OUTDOOR
E4.2	ELECTRICAL LIGHTING CONTROL DIAGRAM
E5.1	ELECTRICAL DETAILS

LCDG
La Cañada Design Group
Architecture
Planning
Interiors

630 N. Rosemead Boulevard, Ste 400
Pasadena, California 91107
(626) 351-4301 FAX (626)351-4302

Budlong
An MBE|SBE|DBE|LSBE Firm
Glendale|Downtown LA|Camarillo
WWW.BUDLONG.COM
JOB# - 23-010

Registration

Client Name:
COUNTY OF LOS ANGELES PUBLIC WORKS

Project Title:
DEPARTMENT OF ANIMAL CARE AND CONTROL HEADQUARTERS FENCING PROJECT

Project Address:
5898 Cherry Ave.,
Long Beach, CA 90805

SPEC #: 7856

INTERIM REVIEW DOCUMENTS

Interim review documents are incomplete and not to be used for regulatory approval, permit, or construction.

NOT FOR CONSTRUCTION

La Cañada Design Group expressly reserves its common law copyright and other property rights in these plans. These plans are not to be reproduced, changed or copied in any form or manner whatsoever, nor are they to be assigned to a third party without first obtaining the written permission and consent of La Cañada Design Group. The owner agrees to hold harmless and indemnify La Cañada Design Group against all damages, claims and losses arising out of any reuse of the plans and specifications without the authorization of La Cañada Design Group.

Milestones	Date
CD 50%	9/25/23
CD 90%	1/9/24
BACK CHECK 1	7/2/24

Revisions

No.	Description	Date

Drawn by ZR
Reviewed by VD

Plot date: Jul 02,2024 - 12:02PM

LCDG Job Number: 0646.31

Sheet Title

ELECTRICAL FRONT SHEET

Sheet Number

E1.1

KEY NOTES

1. PROVIDE NEW PANELBOARD. REFER TO PANEL SCHEDULE.
2. PROVIDE NEW MC CABLE. REFER TO FLOOR PLAN FOR ROUTING OF MC CABLE.
3. PROVIDE NEW CIRCUIT BREAKER ON SPACE AVAILABLE.

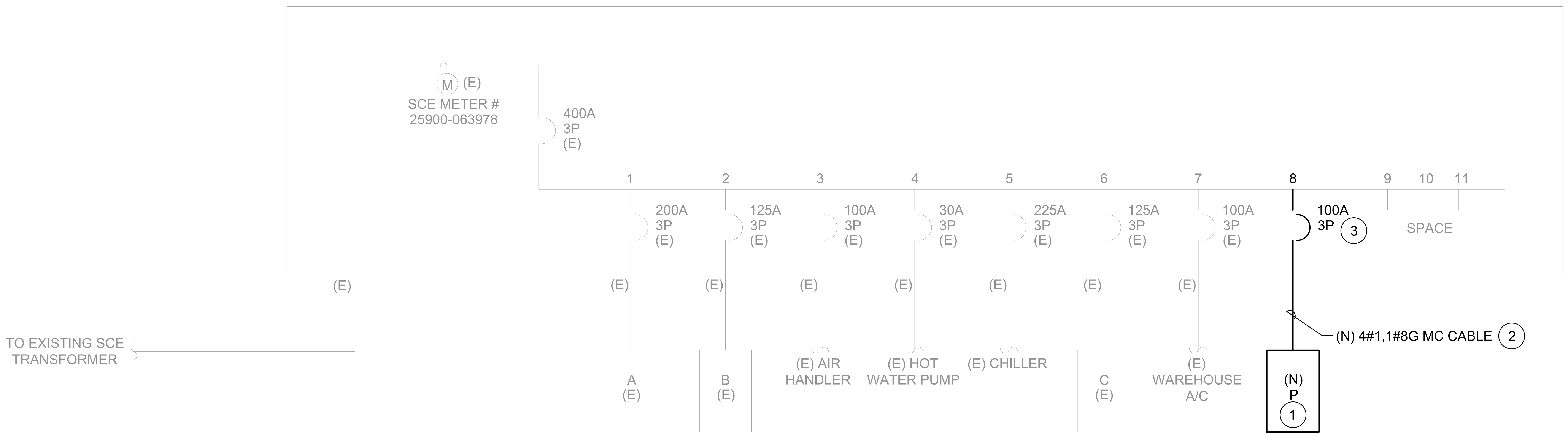

LOAD CALCULATION

(E) MAIN SWITCHBOARD-MS
400A, 208/120V 3 PHASE, 4W

EXISTING LOAD (PEAK DEMAND PER 12 MONTH BILLING)
86 KW X 1.25 = 107.5KW
= 298.6 AMPS

NEW ADDITIONAL LOAD
1. ACCESS GATE = 19.4 AMPS
2. PARKING LIGHTING = 1.7 AMPS
TOTAL NEW LOAD = 21.1 AMPS

TOTAL DEMAND LOAD = 298.6 AMPS + 21.1 AMPS
= 319.7 AMPS

THEREFORE THE (E) 400A MAIN SWITCHBOARD IS SUFFICIENT ENOUGH TO HANDLE THE ADDITIONAL LOAD

PANEL: P — 120/208 VOLT, 3 PH, 4W — 100 AMP COPPER BUS

LOCATION: (PANEL TO HAVE BOLT-ON BREAKERS) MAIN: LUGS ONLY

MOUNTING: SURFACE FLUSH STANDING LOAD: 2.4 kVA 19 AMPS

CK #	NT	VA LOAD			LOAD DESCRIPTION	OUTLETS			CKT BKR		CKT BKR		OUTLETS			LOAD DESCRIPTION	VA LOAD			NT	CK #
		LINE A	LINE B	LINE C		O	R	L	P	A	A	P	L	R	O		LINE A	LINE B	LINE C		
1		1116			1 HP/115V GATE OPERATOR MOTOR (VD = 2.52% @ 9.70A, 150 FT, #10AWG)				1	20	20	1				1 HP/115V GATE OPERATOR MOTOR (VD = 3.17% @ 9.70A, 300 FT, #8AWG)	1116				2
3			204		SITE LIGHTING (VD = 1.33% @ 1.70A, 450 FT, #10AWG)			6	1	20	20	1				SPARE					4
5					SPARE				1	20	20	1				SPARE					6
7					SPARE				1	20	20	1				SPARE					8
9					SPARE				1	20	20	1				SPARE					10
11					SPARE				1	20	20	1				SPARE					12
13					SPARE				1	20	20	1				SPARE					14
15					SPARE				1	20	20	1				SPARE					16
17					SPARE				1	20	20	1				SPARE					18
		1116	204	0	SUB - TOTALS											SUB - TOTALS	1116	0	0		
																LINE TOTALS:	2232	204	0		
																LCL ADDER	0	0	0		
																TOTAL VA PER PHASE	2232	204	0		
																LINE AMPS	19	2	0		

NOTE: 1.
2.
3.
4.

LCDG
La Cañada Design Group
Architecture
Planning
Interiors

630 N. Rosemead Boulevard, Ste 400
Pasadena, California 91107
(626) 351-4301 FAX (626)351-4302

Budlong
An MBE/SBE/DBE/LSBE Firm
Glendale/Downtown LA/Camarillo
WWW.BUDLONG.COM
JOB#: 23-010

Registration

Client Name:
COUNTY OF LOS ANGELES PUBLIC WORKS

Project Title:
DEPARTMENT OF ANIMAL CARE AND CONTROL HEADQUARTERS FENCING PROJECT

Project Address:
5898 Cherry Ave.,
Long Beach, CA 90805

SPEC #: 7856

INTERIM REVIEW DOCUMENTS

Interim review documents are incomplete and not to be used for regulatory approval, permit, or construction.

NOT FOR CONSTRUCTION

La Cañada Design Group expressly reserves its common law copyright and other property rights in these plans. These plans are not to be reproduced, changed or copied in any form or manner whatsoever, nor are they to be assigned to a third party without first obtaining the written permission and consent of La Cañada Design Group. The owner agrees to hold harmless and indemnify La Cañada Design Group against all damages, claims and losses arising out of any reuse of the plans and specifications without the authorization of La Cañada Design Group.

Milestones	Date
CD 50%	9/25/23
CD 90%	1/9/24
BACK CHECK 1	7/2/24

Revisions

No.	Description	Date

Drawn by ZR
Reviewed by VD

Plot date: Jul 02,2024 - 12:03PM

LCDG Job Number: 0646.31

Sheet Title

ELECTRICAL SINGLE LINE DIAGRAM/PANEL SCHEDULES & LOAD CALCULATION

Sheet Number

E1.2

LIGHTING FIXTURE SCHEDULE

TYPE	MANUFACTURER & MODEL NUMBER	MOUNTING	SOURCE COLOR TEMP LUMENS	WATTS	SYSTEM INPUT WATTS	VOLTAGE	DIMMING	DESCRIPTION	NOTES
A	VISIONAIRE #RLX-1-T4-32LC-7-3K-UNV	POLE MOUNT	3000K CCT 4869 LUMENS	34	34	120-277V		PROVIDE COMPATIBLE 20' POLE AND CONCRETE POLE BASE	

GENERAL NOTES:

1 - PROVIDE ALL LIGHTING FIXTURES AS SHOWN COMPLETE WITH LAMPS, WIRED, CONTROLLED AND SECURELY ATTACHED TO SUPPORTS.
2 - PROVIDE UL LISTED DRIVERS OR SCOKETS WITH MANUFACTURER LABEL LISTED PER THE INPUT SYSTEM WATTS AS INDICATED ON THE LIGHTING FIXTURE SCHEDULE.
3 - THE LIGHTING FIXTURES AND WORKMANSHIP SHALL BE IN ACCORDANCE WITH THE STANDARDS AND REGULATIONS OF THE FOLLOWING:
A. UNDERWRITERS LABORATORIES (UL)
B. CALIFORNIA ELECTRICAL CODE (CEC)
C. LOCAL BUILDING AND LIFE SAFETY CODE AGENCIES.
D. LM-79-08, LM-80-08, TM-21-11, AND TITLE 20 LISTED
4 - ALL FIXTURES AND WORKMANSHIP SHALL BE GUARANTEED FREE OF DEFECTS AND FULLY OPERATIONAL. ANY FIXTURES OR WORKMANSHIP FOUND TO BE DEFECTIVE DURING THE WARRANTY PERIOD WILL BE EITHER FIXED OR REPLACED BY THE CONTRACTOR AT NO COST TO THE OWNER.
5 - PROVIDE ADEQUATE AND STURDY SUPPORT FOR EACH LIGHTING FIXTURE OR POLE LIGHT ASSEMBLY. CONTRACTOR SHALL BE RESPONSIBLE FOR VERFYING THE WEIGHT AND MOUNTING METHOD OF ALL FIXTURES AND FURNISH AND INSTALL SUITABLE SUPPORTS OR BASE FOOTINGS. FIXTURE MOUNTING ASSEMBLIES SHALL COMPLY WITH ALL LOCAL SEISMIC CODES AND REGULATIONS.
NOTE: CONTRACTOR SHALL REFER TO ARCHITECTURAL OR STRUCTURAL DRAWINGS FOR FOOTING REQUIREMENTS.
6 - PROVIDE ALL LIGHT FIXTURES EQUIPPED WITH COMPATIBLE DIMMING DRIVERS PER THE LIGHTING CONTROLS SYSTEM.
7 - PROVIDE UL924 DEVICES FOR ALL EMERGENCY FIXTURES. ALL LIGHTING FIXTURES EQUIPPED WITH EMERGENCY BATTERY BACK-UP SHALL BE PROVIDED WITH A UN-SWITCHED HOT WIRE PER MANUFACTURER DIRECTIONS.
8- AT THE COMPLETION OF CONSTRUCTION, CONTRACTOR SHALL CLEAN LENSES AND REFLECTORS OF ALL LIGHT FIXTURES SO AS TO RENDER THEM FREE OF ANY MATERIAL, SUBTANCE OR FILM FOREIGN TO THE FIXTURE. BLEMISHED, DAMAGED OR UNSATISFACTORY FIXTURES SHALL BE REPLACED IN A SATISFACTORY MANNER.
9 - CONTRACTOR SHALL CONFIRM ALL LIGHT FIXTURE VOLTAGES WITH LIGHTING PLANS AND LIGHTING PANEL SCHEDULES.
10 - PROVIDE ALL FINISHES FOR ALL LIGHT FIXTURES PER THE ARCHITECTS FINAL SELECTION.

LCDG
La Cañada Design Group
Architecture
Planning
Interiors

630 N. Rosemead Boulevard, Ste 400
Pasadena, California 91107
(626) 351-4301 FAX (626)351-4302

Budlong

Registration

Client Name:
COUNTY OF LOS ANGELES PUBLIC WORKS

Project Title:
DEPARTMENT OF ANIMAL CARE AND CONTROL HEADQUARTERS FENCING PROJECT

Project Address:
5898 Cherry Ave.,
Long Beach, CA 90805

SPEC #: 7856

INTERIM REVIEW DOCUMENTS
Interim review documents are incomplete and not to be used for regulatory approval, permit, or construction.
NOT FOR CONSTRUCTION

La Cañada Design Group expressly reserves its common law copyright and other property rights in these plans. These plans are not to be reproduced, changed or copied in any form or manner whatsoever, nor are they to be assigned to a third party without first obtaining the written permission and consent of La Cañada Design Group. The owner agrees to hold harmless and indemnify La Cañada Design Group against all damages, claims and losses arising out of any reuse of the plans and specifications without the authorization of La Cañada Design Group.

Milestones	Date
CD 50%	9/25/23
CD 90%	1/9/24
BACK CHECK 1	7/2/24

Revisions

No.	Description	Date

Drawn by ZR
Reviewed by VD

Plot date: Jul 02,2024 - 12:04PM

LCDG Job Number: 0646.31

Sheet Title
ELECTRICAL LIGHTING FIXTURE SCHEDULE

Sheet Number
E1.3

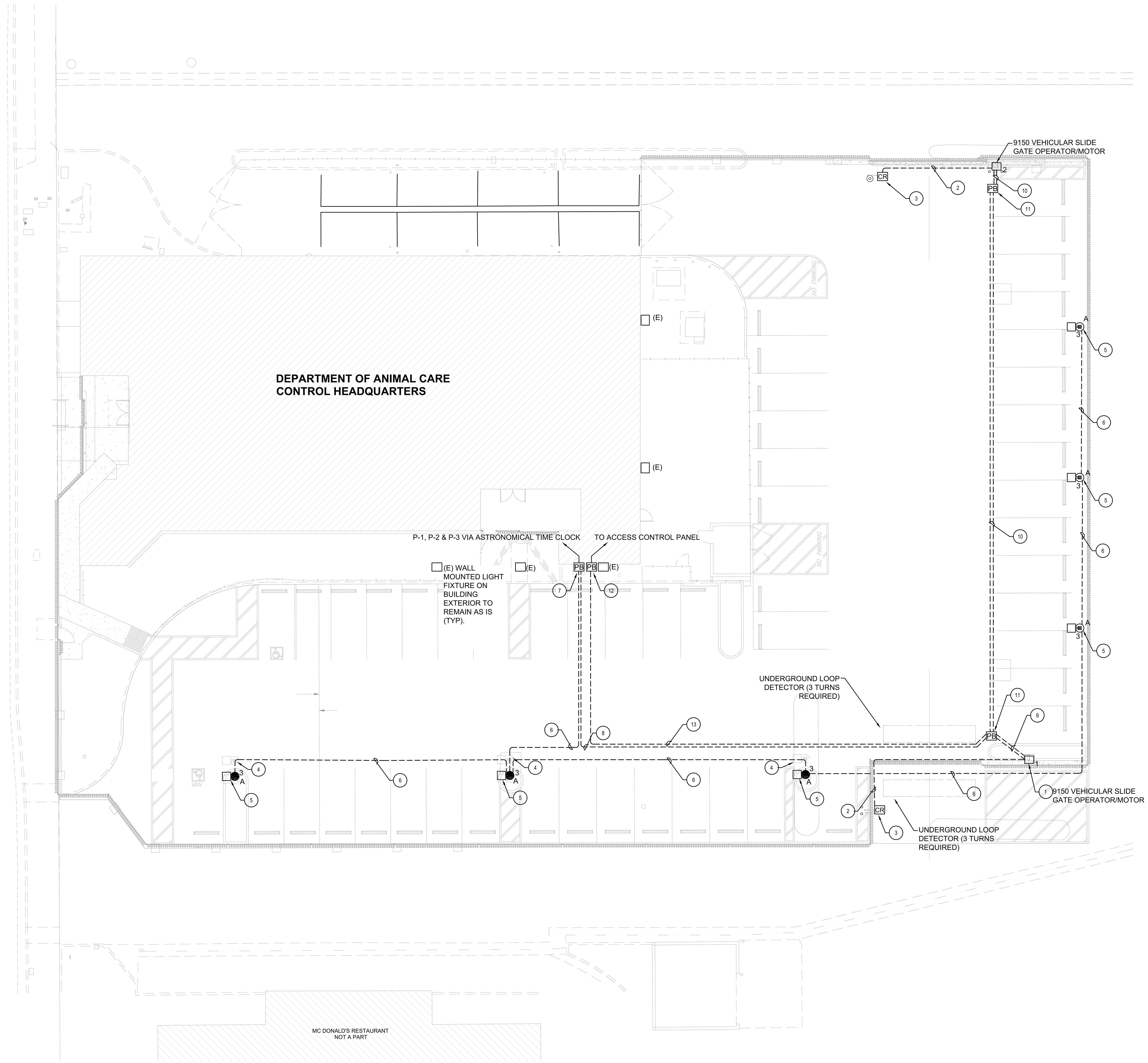

KEY NOTES

1. CONTRACTOR TO PROVIDE REQUIRED CABLING AND CONNECTIONS FROM GATE MOTOR TO NEW PEDESTAL MOUNTED KEY PAD FOR ACCESS CONTROL SYSTEM FUNCTION AS REQUIRED PER PROJECT.
2. MINIMUM 1-1/4" U.G. CONDUIT FROM GATE MOTOR TO PEDESTAL ACCESS CONTROL EQUIPMENT WITH NEW CABLING AS REQUIRED FOR COMPLETE CONNECTIONS AND TERMINATIONS.
3. PROVIDE CARD READER TYPE HID SIGNO READER 40 MOUNTED ON GOOSENECK PEDESTAL TYPE DOOR KING STANDARD PAD-MOUNT WITH IN-GROUND MOUNT 1200-046 ADAPTER FOR 5X5 BASE PLATE TO MATCH GATE OPERATOR SYSTEM AS REQUIRED PER PROJECT FOR A COMPLETE WORKING SYSTEM.
4. EXISTING LIGHT AND POLE, AND CONCRETE POLE BASE TO BE DEMOLISHED. EXISTING SITE LIGHTING CIRCUIT CONDUCTORS TO BE DISCONNECTED AND REMOVED BACK TO SOURCE. EXISTING LIGHTING CONNECTED TO DEMOLISHED LIGHT FIXTURES IS TO BE MAINTAINED AND REMAIN OPERATIONAL AT ALL TIMES. EXISTING CONDUIT TO BE ABANDONED IN PLACE.
5. FURNISH AND INSTALL NEW POLE MOUNTED LED LIGHT FIXTURE - TYPE VISIONAIRE #RLX-1-T4-32LC-3-3K-UNV- WITH COMPATIBLE 20' POLE AND NEW CONCRETE POLE BASE. SEE ELECTRICAL DETAILS AND DETAIL #11 ON SHEET C4.01 FOR MORE INFORMATION.
6. 1" C WITH 2#10&1#10G FOR NEW POWER CIRCUIT TO SITE LIGHTING. SEE FLOOR PLAN FOR SOURCE PANEL AND ASTRONOMICAL TIME CLOCK LOCATIONS, SEE PANEL SCHEDULE FOR MORE INFORMATION.
7. PROVIDE ELECTRICAL 10"X10"X8" DEPTH NEMA 3R PULL BOX MOUNTED ON BUILDING EXTERIOR WITH CONDUIT SLEEVE INTO BUILDING FOR NEW POWER CIRCUITS. SEE FLOOR PLAN FOR SOURCE PANEL LOCATION.
8. 2"C WITH 2#10&1#10G AND 2#8&1#8G FOR DEDICATED GATE OPERATOR POWER CIRCUITS. SEE PANEL SCHEDULE AND ELECTRICAL DETAILS FOR MORE INFORMATION.
9. 1"C WITH 2#10&1#10G FOR DEDICATED GATE OPERATOR POWER CIRCUIT. SEE PANEL SCHEDULE AND ELECTRICAL DETAILS FOR MORE INFORMATION. PROVIDE 1" CONDUIT FOR ACCESS CONTROL CABLING TO GATE OPERATOR AND CARD READER.
10. 1"C WITH 2#8&1#8G FOR DEDICATED GATE OPERATOR POWER CIRCUIT. SEE PANEL SCHEDULE AND ELECTRICAL DETAILS FOR MORE INFORMATION. PROVIDE 1" CONDUIT FOR ACCESS CONTROL CABLING TO GATE OPERATOR AND CARD READER.
11. UNDERGROUND 24"X24"X36" ELECTRICAL PULL BOX. SEE ELECTRICAL DETAILS #3 FOR MORE INFORMATION.
12. PROVIDE ELECTRICAL 10"X10"X8" DEPTH NEMA 3R PULL BOX MOUNTED ON BUILDING EXTERIOR WITH CONDUIT SLEEVE INTO BUILDING FOR ACCESS CONTROL CABLING. SEE FLOOR PLAN FOR ACCESS CONTROL PANEL LOCATION.
13. 1"C FOR ACCESS CONTROL CABLING TO BOTH GATE OPERATORS AND CARD READERS FROM PULL BOX MOUNTED ON BUILDING EXTERIOR.

GENERAL NOTES

1. CONTRACTOR TO PROVIDE DEMOLITION, INSTALLATION AND MINIMAL DISRUPTION TO MCDONALDS AND OTHER BUSINESSES DURING THE CONSTRUCTION PHASE.

0' 10'

Know what's **below.** **Call** before you dig.

CITY OF LONG BEACH EL. 48.646 FT
BENCHMARK NO. 1029
NGVD 29
1985 ADJ.

LCDG
La Cañada Design Group
Architecture
Planning
Interiors

630 N. Rosemead Boulevard, Ste 400
Pasadena, California 91107
(626) 351-4301 FAX (626)351-4302

Budlong

Registration

Client Name:
COUNTY OF LOS ANGELES PUBLIC WORKS

Project Title:
DEPARTMENT OF ANIMAL CARE AND CONTROL HEADQUARTERS FENCING PROJECT

Project Address:
5898 Cherry Ave.,
Long Beach, CA 90805

SPEC #: 7856

INTERIM REVIEW DOCUMENTS

Interim review documents are incomplete and not to be used for regulatory approval, permit, or construction.

NOT FOR CONSTRUCTION

La Cañada Design Group expressly reserves its common law copyright and other property rights in these plans. These plans are not to be reproduced, changed or copied in any form or manner whatsoever, nor are they to be assigned to a third party without first obtaining the written permission and consent of La Cañada Design Group. The owner agrees to hold harmless and indemnify La Cañada Design Group against all damages, claims and losses arising out of any reuse of the plans and specifications without the authorization of La Cañada Design Group.

Milestones	Date
CD 50%	9/25/23
CD 90%	1/9/24
BACK CHECK 1	7/2/24

Revisions

No.	Description	Date

Drawn by ZR
Reviewed by VD

Plot date: Jul 02,2024 - 12:04PM

LCDG Job Number: 0646.31

Sheet Title

ELECTRICAL SITE LIGHTING, POWER AND ACCESS PLAN

Sheet Number

E2.1

GENERAL NOTES

1. CONTRACTOR TO PROVIDE DEMOLITION, INSTALLATION AND MINIMAL DISRUPTION TO MCDONALDS AND OTHER BUSINESS DURING THE CONSTRUCTION PHASE.

KEY NOTES

1. PROVIDE NEW PANEL. REFER TO PANEL SCHEDULE ON SHEET E1.2.
2. PROVIDE 4#1,1#8G MC CABLE RUN ABOVE CEILING SPACE.
3. 2"C WITH 2#10&1#10G AND 2#8&1#8G FOR DEDICATED GATE OPERATOR POWER CIRCUITS. SEE PANEL SCHEDULE, SITE PLAN AND ELECTRICAL DETAILS FOR MORE INFORMATION.
4. 1" C WITH 2#10&1#10G FOR SITE LIGHTING POWER CIRCUIT. PANEL SCHEDULE AND SITE PLAN FOR MORE INFORMATION.
5. PROVIDE COMPATIBLE ASTRONOMICAL TIME CLOCK FOR DAYLIGHT AVAILABILITY AND AUTOMATIC SCHEDULING CONTROLS OF SITE LIGHTING. USE TYPE WATTSTOPPER #RT-200 OR APPROVED EQUAL. SEE LIGHTING CONTROLS WIRING DIAGRAM FOR MORE INFORMATION.
6. 1" CONDUIT FOR CABLING FROM ACCESS CONTROL PANEL TO PULL BOX ON BUILDING EXTERIOR. SEE SITE PLAN AND ELECTRICAL DETAILS FOR MORE INFORMATION.

1/4"=1'-0" 0 2' 4' 8' 12'

LCDG
La Cañada Design Group
Architecture
Planning
Interiors

630 N. Rosemead Boulevard, Ste 400
Pasadena, California 91107
(626) 351-4301 FAX (626)351-4302

Budlong
An MBE|SBE|DBE|LSBE Firm
Glendale|Downtown LA|Camarillo
WWW.BUDLONG.COM
JOB# - 23-010

Registration

Client Name:
COUNTY OF LOS ANGELES PUBLIC WORKS

Project Title:
DEPARTMENT OF ANIMAL CARE AND CONTROL HEADQUARTERS FENCING PROJECT

Project Address:
5898 Cherry Ave.,
Long Beach, CA 90805

SPEC #: 7856

INTERIM REVIEW DOCUMENTS

Interim review documents are incomplete and not to be used for regulatory approval, permit, or construction.

NOT FOR CONSTRUCTION

La Cañada Design Group expressly reserves its common law copyright and other property rights in these plans. These plans are not to be reproduced, changed or copied in any form or manner whatsoever, nor are they to be assigned to a third party without first obtaining the written permission and consent of La Cañada Design Group. The owner agrees to hold harmless and indemnify La Cañada Design Group against all damages, claims and losses arising out of any reuse of the plans and specifications without the authorization of La Cañada Design Group.

Milestones	Date
CD 50%	9/25/23
CD 90%	1/9/24
BACK CHECK 1	7/2/24

Revisions

No.	Description	Date

Drawn by ZR
Reviewed by VD

Plot date: Jul 02,2024 - 12:05PM

LCDG Job Number: 0646.31

Sheet Title

ELECTRICAL POWER & ACCESS FLOOR PLAN

Sheet Number

E2.2

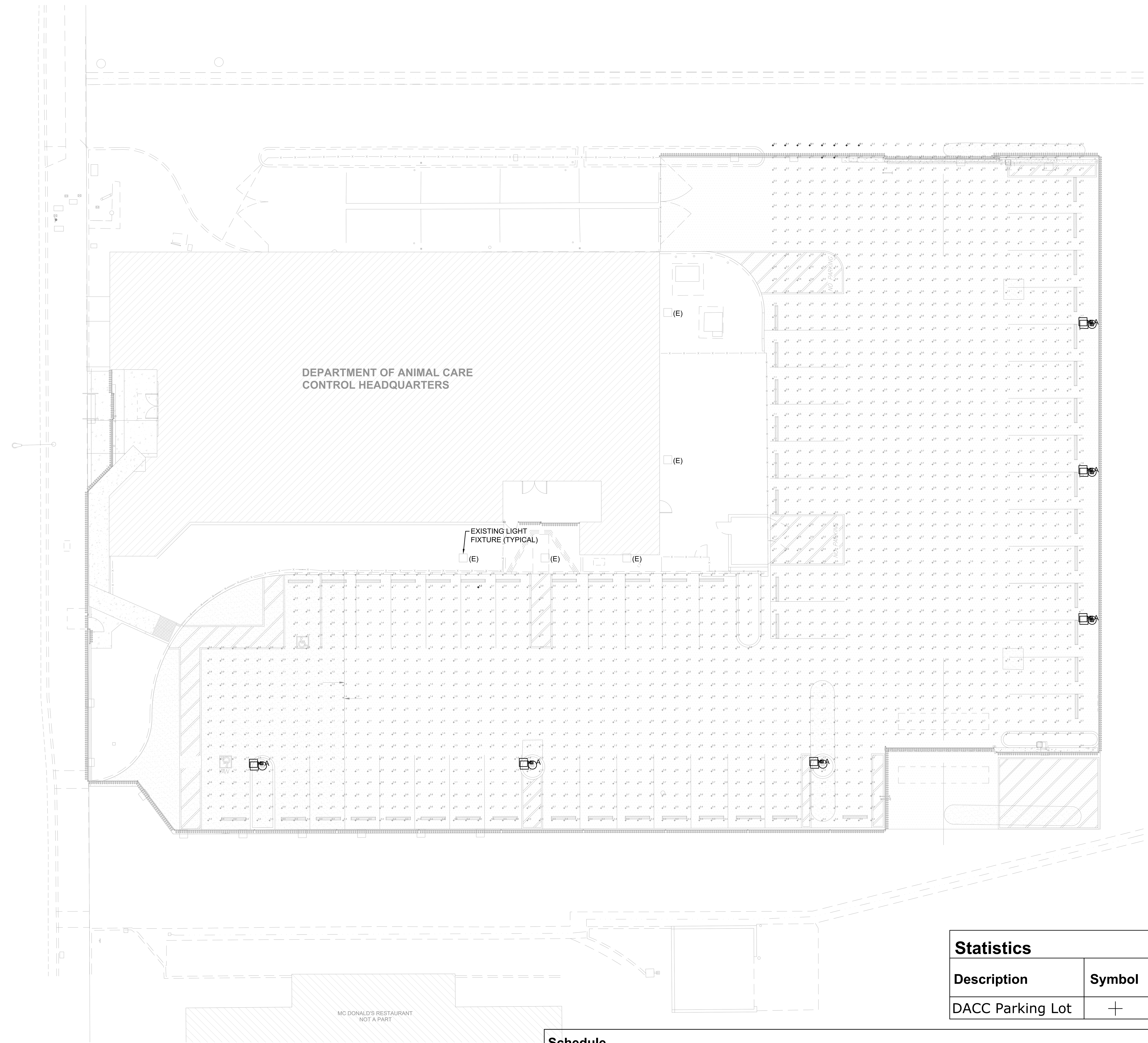

Statistics

Description	Symbol	Avg	Max	Min	Max/Min	Avg/Min
DACC Parking Lot	+	1.0 fc	4.2 fc	0.1 fc	42.0:1	10.0:1

Schedule

Symbol	Label	QTY	Manufacturer	Catalog	Description	Number Lamps	Lamp Output	LLF	Input Power
	A	6	Visionaire Lighting LLC	RLX-1-T4-32LC-3-3K-	31 in. L x 14 in. W x 4 in. H LED LUMINAIRE	1	4869	0.8	34

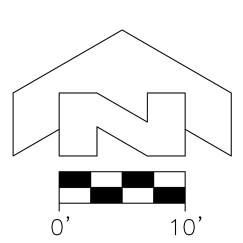

811 Know what's **below.** **Call** before you dig.

CITY OF LONG BEACH EL. 48.646 FT
BENCHMARK NO. 1029
NGVD 29
1985 ADJ.

LCDG
La Cañada Design Group
Architecture
Planning
Interiors

630 N. Rosemead Boulevard, Ste 400
Pasadena, California 91107
(626) 351-4301 FAX (626)351-4302

Budlong
An MBE|SBE|DBE|LSBE Firm
Glendale|Downtown LA|Camarillo
WWW.BUDLONG.COM
JOB# - 23-010

Registration

Client Name:
COUNTY OF LOS ANGELES PUBLIC WORKS

Project Title:
DEPARTMENT OF ANIMAL CARE AND CONTROL HEADQUARTERS FENCING PROJECT

Project Address:
5898 Cherry Ave.,
Long Beach, CA 90805
SPEC #: 7856

INTERIM REVIEW DOCUMENTS

Interim review documents are incomplete and not to be used for regulatory approval, permit, or construction.

NOT FOR CONSTRUCTION

La Cañada Design Group expressly reserves its common law copyright and other property rights in these plans. These plans are not to be reproduced, changed or copied in any form or manner whatsoever, nor are they to be assigned to a third party without first obtaining the written permission and consent of La Cañada Design Group. The owner agrees to hold harmless and indemnify La Cañada Design Group against all damages, claims and losses arising out of any reuse of the plans and specifications without the authorization of La Cañada Design Group.

Milestones	Date
CD 50%	9/25/23
CD 90%	1/9/24
BACK CHECK 1	7/2/24

Revisions

No.	Description	Date

Drawn by ZR
Reviewed by VD

Plot date: Jul 02,2024 - 12:05PM

LCDG Job Number: 0646.31

Sheet Title
ELECTRICAL SITE PHOTOMETRIC CALCULATIONS

Sheet Number
E3.1

STATE OF CALIFORNIA
Outdoor Lighting
CALIFORNIA ENERGY COMMISSION

CERTIFICATE OF COMPLIANCE			**NRCC-LTO-E**
This document is used to demonstrate compliance with requirements in 110.9, 130.0, 130.2, 140.7, and 141.0(b)2L for outdoor lighting scopes using the prescriptive path for nonresidential and hotel/motel occupancies. It is also used to document compliance with requirements in 160.5, 170.2(e)6, 180.1(a) and 180.2(b)4Bv for outdoor lighting scopes using the prescriptive path for multifamily and mixed-use occupancies. Multifamily includes dormitory and senior living facilities.			
Project Name: DACC HQ Parking Lot		**Report Page:**	**(Page 1 of 7)**
Project Address:	5898 Cherry Ave	**Date Prepared:**	9/13/2023

A. GENERAL INFORMATION

01	Project Location (city)	Long Beach	04	Total Illuminated Hardscape Area (ft^2)	20587
02	Climate Zone	6			
03	Outdoor Lighting Zone per Title 24 Part 1 10.114 or as designated by Authority Having Jurisdiction (AHJ):				
☐	LZ-0: Very Low - Undeveloped Parkland	☒ LZ-2: Moderate - Urban Clusters	☐ LZ-4: High - Must be reviewed by CA Energy Commission for Approval		
☐	LZ-1: Low - Rural Areas	☐ LZ-3: Moderately High - Urban Areas			
05	Occupancy Types within Project				
● All Other Occupancies					

B. PROJECT SCOPE

This table includes outdoor lighting systems that are within the scope of the permit application and are demonstrating compliance using the prescriptive path outlined in 140.7 / 170.2(e)6 or 141.0(b)2L / 180.2(b)4Bv for alterations.

My Project Consists of:

01	02	
☐ New Lighting System	Must Comply with Allowances from 140.7 / 170.2(e)6	
☒ Altered Lighting System	Is your alteration increasing the connected lighting load (Watts)?	● Yes ○ No
03	04	05
% of Existing Luminaires Being Altered[1]	Sum Total of Luminaires Being Added or Altered	Calculation Method
☐ < 10% ☐ >= 10% and < 50% ☐ >= 50%	0	

Please proceed to Table F. Outdoor Lighting Fixture Schedule to define the project's luminaires.

[1] FOOTNOTES: % of Existing Luminaires Being Altered = (Sum Total of Luminaires Being Added or Altered / Existing Luminaires within the Scope of the Permit Application) x 100.

STATE OF CALIFORNIA
Outdoor Lighting
CALIFORNIA ENERGY COMMISSION

CERTIFICATE OF COMPLIANCE			**NRCC-LTO-E**
Project Name: DACC HQ Parking Lot		**Report Page:**	**(Page 2 of 7)**
		Date Prepared:	9/13/2023

C. COMPLIANCE RESULTS

Results in this table are automatically calculated from data input and calculations in Tables F through N. Note: If any cell on this table says "COMPLIES with Exceptional Conditions" refer to Table D. Exceptional Conditions for guidance or see applicable Table referenced below.

Calculations of Total Allowed Lighting Power (Watts) 140.7 / 170.2(e)6 or 141.0(b)2L / 180.2(b)4Bv											Compliance Results		
01		02		03		04		05		06	07		08	09
General Hardscape Allowance 140.7(d)1 / 170.2(e)6 (See Table I)	+	Per Application 140.7(d)2 / 170.2(e)6 (See Table J)	+	Sales Frontage 140.7(d)2 (See Table K)	+	Ornamental 140.7(d)2 / 170.2(e)6 (See Table L)	+	Per Specific Area 140.7(d)2 / 170.2(e)6 (See Table M)	OR	Existing Power Allowance 141.0(b)2L / 180.2(b)4Bv (See Table N)	= **Total Allowed** (Watts)	≥	**Total Actual** (Watts)	**07 must be >= 08**
707	+	---	+	---	+	---	+	---	OR	---	= 707	≥	204	COMPLIES
Shielding Compliance (See Table G for Details)														N/A
Controls Compliance (See Table H for Details)														COMPLIES

D. EXCEPTIONAL CONDITIONS

This table is auto-filled with uneditable comments because of selections made or data entered in tables throughout the form.

E. ADDITIONAL REMARKS

This table includes remarks made by the permit applicant to the Authority Having Jurisdiction.

STATE OF CALIFORNIA
Outdoor Lighting
CALIFORNIA ENERGY COMMISSION

CERTIFICATE OF COMPLIANCE			**NRCC-LTO-E**
Project Name: DACC HQ Parking Lot		**Report Page:**	**(Page 3 of 7)**
		Date Prepared:	9/13/2023

F. OUTDOOR LIGHTING FIXTURE SCHEDULE

For new or altered lighting systems demonstrating compliance with 140.7 / 170.2(e)6 all new luminaires being installed and any existing luminaires remaining or being moved within the spaces covered by the permit application are included in the Table below. For altered lighting systems using the Existing Power method per 141.0(b)2L only new luminaires being installed and replacement luminaires being installed as part of the project scope are included (ie, existing luminaires remaining or existing luminaires being moved are not included). Outdoor lighting attached to multifamily buildings and controlled from the inside of a dwelling unit are included in Table H. and are not included here. All other multifamily outdoor lighting is included here.

Designed Wattage:

01	02		03	04	05	06	07	08	09	10	
Name or Item Tag	Complete Luminaire Description		Watts per luminaire[1, 2]	How is Wattage determined	Total Number Luminaires[2]	Luminaire Status[3]	Excluded per 140.7(a) / 170.2(e)6A	Design Watts	Cutoff Req. > 6,200 initial lumen output 130.2(b) / 160.5(c)1[4]	Field Inspector	
										Pass	Fail
A/34	VISIONAIRE #RLX-1-T4A-32LC-3-3K-UNV A/34	☐ Linear	34	Mfr. Spec	6	New	☐	204	NA: < 6200 lumens	☐	☐
							Total Design Watts:	204			

* NOTES: Selections with a * require a note in the space below explaining how compliance is achieved.
EX: Luminaire is lighting a statue; EXCEPTION 2 to 130.2(b)

[1] FOOTNOTES: Authority Having Jurisdiction may ask for Luminaire cut sheets to confirm wattage used for compliance per 130.0(c) / 160.5(b)
[2] For linear luminaires, wattage should be indicated as W/lf instead of Watts/luminaire. Total linear feet should be indicated in column 05 instead of number of luminaires.
[3] Select "New" for new luminaires in a new outdoor lighting project, or for added luminaires in an alteration. Select "Altered" for replacement luminaires in an alteration. Select "Existing to Remain" for existing luminaires within the project scope that are not being altered and are remaining. Select "Existing Reinstalled" for existing luminaires which are being removed and reinstalled as part of the project scope.
[4] Compliance with mandatory shielding requirements is required for luminaires with initial lumen output >= 6,200 unless exempted by 130.2(b)/ 160.5(c)

G. SHIELDING REQUIREMENTS (BUG)

This section does not apply to this project.

STATE OF CALIFORNIA
Outdoor Lighting
CALIFORNIA ENERGY COMMISSION

CERTIFICATE OF COMPLIANCE			**NRCC-LTO-E**
Project Name: DACC HQ Parking Lot		**Report Page:**	**(Page 4 of 7)**
		Date Prepared:	9/13/2023

H. OUTDOOR LIGHTING CONTROLS

This table demonstrates compliance with controls requirements for all new or altered luminaires installed as part of the permit application. For alteration projects, luminaires which are existing to remain (ie untouched) and luminaires which are removed and reinstalled (wiring only) do not need to be included in this table even if they are within the spaces covered by the permit application.
Outdoor lighting for nonresidential buildings, parking garages and common service areas in multifamily buildings must be documented separately from outdoor lighting attached to multifamily buildings and controlled from the inside of a dwelling unit

Mandatory Controls for Nonresidential Occupancies, Parking Garages & Common Areas in Multifamily Buildings

01	02	03	04	05	
Area Description	Shut-Off 130.2(c)1 / 160.5(c)	Auto-Schedule 130.2(c)2 / 160.5(c)	Motion Sensor 130.2(c)3 / 160.5(c)	Field Inspector	
				Pass	Fail
Parking Lot	Astronomical Timer	Provided	Provided	☐	☐

[1] FOOTNOTE: Text has been abbreviated, please refer to Table 160.5-A to confirm compliance with the specific light source technologies listed.
[2] Authority having jurisdiction may ask for cutsheets or other documentation to confirm compliance of light source.
[3] Recessed luminaires marked for use in fire-rated installations, and recessed luminaires installed in non-insulated ceilings are excepted from ii and iii.

STATE OF CALIFORNIA
Outdoor Lighting
CALIFORNIA ENERGY COMMISSION

CERTIFICATE OF COMPLIANCE			**NRCC-LTO-E**
Project Name: DACC HQ Parking Lot		**Report Page:**	**(Page 5 of 7)**
		Date Prepared:	9/13/2023

I. LIGHTING POWER ALLOWANCE (per 140.7 / 170.2(e))

This table includes areas using allowance calculations per 140.7 / 170.2(e). General Hardscape Allowance is per Table 140.7-A/Table 170.2-R while "Use it or lose it" Allowances are per Table 140.7-B /Table 170.2-S. Indicate which allowances are being used to expand sections for user input. Luminaires that qualify for one of the "Use it or lose it" allowances shall not qualify for another "Use it or lose it" allowance.
Outdoor lighting attached to multifamily buildings and controlled from the inside of a dwelling unit are included in Table H. and are not included here. All other multifamily outdoor lighting is included here.

	01			
		"Use it or lose it" Allowance (select all that apply) (select all that apply)		
☒ General Hardscape Allowance Table I (below)	☐ Per Application Table J	☐ Sales Frontage Table K	☐ Ornamental Table L	☐ Per Specific Area Table M

Calculated General Hardscape Lighting Power Allowance per Table 140.7-A for Nonresidential & Hotel/Motel

02	03	04	05	06	07	08	09
Area Description	Area Wattage Allowance (AWA)			Linear Wattage Allowance (LWA)			Total General AWA + LWA (Watts)
	Illuminated Area (ft^2)	Allowed Density (W/ft^2)	Area Allowance (Watts)	Perimeter Length (lf)	Allowed Density (W/lf)	Linear Allowance (Watts)	
Parking Lot	20587	0.019	391.2	771	0.2	115.7	507
Initial Wattage Allowance for Entire Site (Watts):							200
Instances of Initial Wattage Allowance (LZ 0 only)[1]							
Total General Hardscape Allowance (Watts):							707

J. LIGHTING ALLOWANCE: PER APPLICATION

This section does not apply to this project.

K. LIGHTING ALLOWANCE: SALES FRONTAGE

This section does not apply to this project.

L. LIGHTING ALLOWANCE: ORNAMENTAL

This section does not apply to this project.

STATE OF CALIFORNIA
Outdoor Lighting
CALIFORNIA ENERGY COMMISSION

CERTIFICATE OF COMPLIANCE			**NRCC-LTO-E**
Project Name: DACC HQ Parking Lot		**Report Page:**	**(Page 6 of 7)**
		Date Prepared:	9/13/2023

M. LIGHTING ALLOWANCE: PER SPECIFIC AREA

This section does not apply to this project.

N. EXISTING CONDITIONS POWER ALLOWANCE (alterations only)

This section does not apply to this project.

O. DECLARATION OF REQUIRED CERTIFICATES OF INSTALLATION

Selections have been made based on information provided in this document. If any selection has been changed by permit applicant, an explanation should be included in Table E. Additional Remarks. These documents must be provided to the building inspector during construction and can be found online

Form/Title
NRCI-LTO-E - Must be submitted for all buildings

P. DECLARATION OF REQUIRED CERTIFICATES OF ACCEPTANCE

Selections have been made based on information provided in this document. If any selection has been changed by permit applicant, an explanation should be included in Table E. Additional Remarks. These documents must be provided to the building inspector during construction and must be completed through an Acceptance Test Technician Certification Provider (ATTCP). For more information visit: http://www.energy.ca.gov/title24/attcp/providers.html

Form/Title	Systems/Spaces To Be Field Verified
NRCA-LTO-02-A - Must be submitted for all outdoor lighting controls except for alterations where controls are added to <= 20 luminaires.	Parking Lot;

STATE OF CALIFORNIA
Outdoor Lighting
CALIFORNIA ENERGY COMMISSION

CERTIFICATE OF COMPLIANCE			**NRCC-LTO-E**
Project Name: DACC HQ Parking Lot		**Report Page:**	**(Page 7 of 7)**
Project Address:	5898 Cherry Ave	**Date Prepared:**	9/13/2023

DOCUMENTATION AUTHOR'S DECLARATION STATEMENT

I certify that this Certificate of Compliance documentation is accurate and complete.

Documentation Author Name: Anatolly Shalygin	Documentation Author Signature:
Company: Budlong & Associates	Signature Date: 2023-09-13
Address: 315 Arden Ave	CEA/ HERS Certification Identification (if applicable):
City/State/Zip: Glendale CA 91203	Phone: (818) 638-8780

RESPONSIBLE PERSON'S DECLARATION STATEMENT

I certify the following under penalty of perjury, under the laws of the State of California:
1. The information provided on this Certificate of Compliance is true and correct.
2. I am eligible under Division 3 of the Business and Professions Code to accept responsibility for the building design or system design identified on this Certificate of Compliance (responsible designer)
3. The energy features and performance specifications, materials, components, and manufactured devices for the building design or system design identified on this Certificate of Compliance conform to the requirements of Title 24, Part 1 and Part 6 of the California Code of Regulations.
4. The building design features or system design features identified on this Certificate of Compliance are consistent with the information provided on other applicable compliance documents, worksheets, calculations, plans and specifications submitted to the enforcement agency for approval with this building permit application.
5. I will ensure that a completed signed copy of this Certificate of Compliance shall be made available with the building permit(s) issued for the building, and made available to the enforcement agency for all applicable inspections. I understand that a completed signed copy of this Certificate of Compliance is required to be included with the documentation the builder provides to the building owner at occupancy.

Responsible Designer Name: Manan H. Christian	Responsible Designer Signature:
Company: Budlong & Associates	Date Signed: 2023-09-13
Address: 400 W. Ventura Blvd Suite240	License: E 22864
City/State/Zip: Camarillo CA 93010	Phone: (805)987-4001

LCDG
La Cañada Design Group
Architecture
Planning
Interiors

630 N. Rosemead Boulevard, Ste 400
Pasadena, California 91107
(626) 351-4301 FAX (626)351-4302

Budlong
An MBE/SBE/DBE&SBE Firm
Glendale/Downtown LA/Ventura
WWW.BUDLONG.COM
JOB# -23-010

Registration

Client Name:
COUNTY OF LOS ANGELES PUBLIC WORKS

Project Title:
DEPARTMENT OF ANIMAL CARE AND CONTROL HEADQUARTERS FENCING PROJECT

Project Address:
5898 Cherry Ave.,
Long Beach, CA 90805

SPEC #: 7856

INTERIM REVIEW DOCUMENTS

Interim review documents are incomplete and not to be used for regulatory approval, permit, or construction.
NOT FOR CONSTRUCTION

La Cañada Design Group expressly reserves its common law copyright and other property rights in these plans. These plans are not to be reproduced, changed or copied in any form or manner whatsoever, nor are they to be assigned to a third party without first obtaining the written permission and consent of La Cañada Design Group. The owner agrees to hold harmless and indemnify La Cañada Design Group against all damages, claims and losses arising out of any reuse of the plans and specifications without the authorization of La Cañada Design Group.

Milestones	Date
CD 50%	9/25/23
CD 90%	1/9/24
BACK CHECK 1	7/2/24

Revisions

No.	Description	Date
△		
△		
△		
△		
△		
△		
△		

Drawn by ZR
Reviewed by VD

Plot date: Jul 02,2024 - 12:06PM

LCDG Job Number: 0646.31

Sheet Title
ELECTRICAL TITLE-24 COMPLIANCE FORMS-OUTDOOR

Sheet Number
E4.1

INSTALLATION & WIRING

WARNING

DISCONNECT POWER AT THE CIRCUIT BREAKER BEFORE INSTALLING THIS PRODUCT.
ONLY CONNECT THE RT-200 TO A SINGLE POLE CIRCUIT. THE RT-200 IS NOT SUITABLE FOR 3-WAY SWITCHING.
IF THE EXISTING WIRING DOES NOT MATCH THE DESCRIPTION FOR A SINGLE POLE CIRCUIT, YOU SHOULD CONSULT WITH A QUALIFIED ELECTRICIAN.

1. **Prepare the switch box**
   After the power is turned OFF at the circuit breaker box, remove the existing wall plate and mounting screws. Pull the old switch from the wall box.
2. **Identify the type of circuit**
   In a single pole circuit, two single wires connect to two screws on the existing switch. A ground wire may also be present and connected to a ground terminal on the old switch. A neutral wire should also be present in the wall box.
3. **Prepare the wires**
   Tag the wires currently connected to the existing switch, so that they can be identified later. Disconnect the wires. Make sure the insulation is stripped off the wires to expose their copper cores to the length indicated by the "Strip Gauge" (approximately ½ inch).

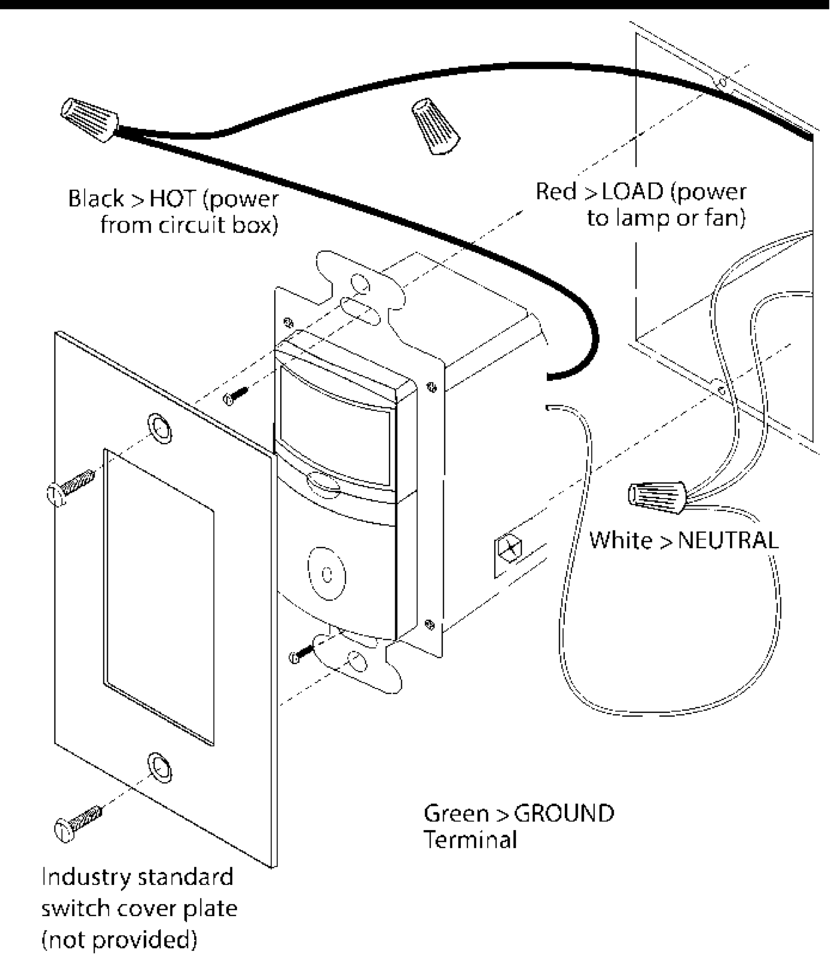

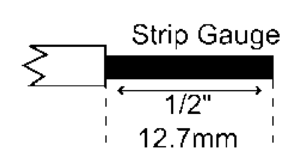

4. **Wire the time switch**
   Twist the existing wires together with the wire leads on the RT-200 as indicated in the table below. Cap them securely using the wire nuts provided.

Power wire from the circuit (hot)	**to**	Black wire on RT-200
Power wire from the lamp or fan (load)	**to**	Red wire on RT-200
Neutral wires from the circuit	**to**	White wire on RT-200
Ground wire from the circuit	**to**	Ground terminal on RT-200

5. **Put the RT-200 in the wall box with the display positioned above the ON/OFF button.**
   Secure it to the wall box with the screws provided.
6. **Install cover plates.**
   Install industry standard decorator wall switch cover plate (not included).
7. **Restore power to the circuit.**
   Turn on the breaker or replace the fuse.

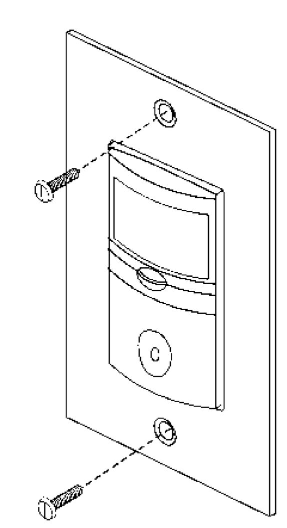

LCDG
La Cañada Design Group
Architecture
Planning
Interiors

630 N. Rosemead Boulevard, Ste 400
Pasadena, California 91107
(626) 351-4301 FAX (626)351-4302

Budlong

Registration

Client Name:
COUNTY OF LOS ANGELES PUBLIC WORKS

Project Title:
DEPARTMENT OF ANIMAL CARE AND CONTROL HEADQUARTERS FENCING PROJECT

Project Address:
5898 Cherry Ave.,
Long Beach, CA 90805

SPEC #: 7856

INTERIM REVIEW DOCUMENTS

Interim review documents are incomplete and not to be used for regulatory approval, permit, or construction.

NOT FOR CONSTRUCTION

La Cañada Design Group expressly reserves its common law copyright and other property rights in these plans. These plans are not to be reproduced, changed or copied in any form or manner whatsoever, nor are they to be assigned to a third party without first obtaining the written permission and consent of La Cañada Design Group. The owner agrees to hold harmless and indemnify La Cañada Design Group against all damages, claims and losses arising out of any reuse of the plans and specifications without the authorization of La Cañada Design Group.

Milestones	Date
CD 50%	9/25/23
CD 90%	1/9/24
BACK CHECK 1	7/2/24

Revisions

No.	Description	Date

Drawn by ZR
Reviewed by VD

Plot date: Jul 02,2024 - 12:06PM

LCDG Job Number: 0646.31

Sheet Title

ELECTRICAL LIGHTING CONTROL DIAGRAM

Sheet Number

E4.2

1. DUCT BANKS SHALL HAVE A CONTINUOUS SLOPE DOWNWARD TOWARD GROUND PULL BOXES AND AWAY FROM BUILDINGS WITH A PITCH OF NOT LESS THAN FOUR (4) INCHES IN 100 FT.
2. ALL TRENCHES AND EXCAVATED AREAS IN ASPHALTED AND CEMENTED LOCATIONS SHALL BE BACKFILLED WITH 1 SACK SLURRY CEMENT MIX. LAWN AND PLANTED LOCATIONS SHALL BE BACKFILLED WITH COMPACTED SOIL TO MEET DISTRICT SPECIFICATIONS.

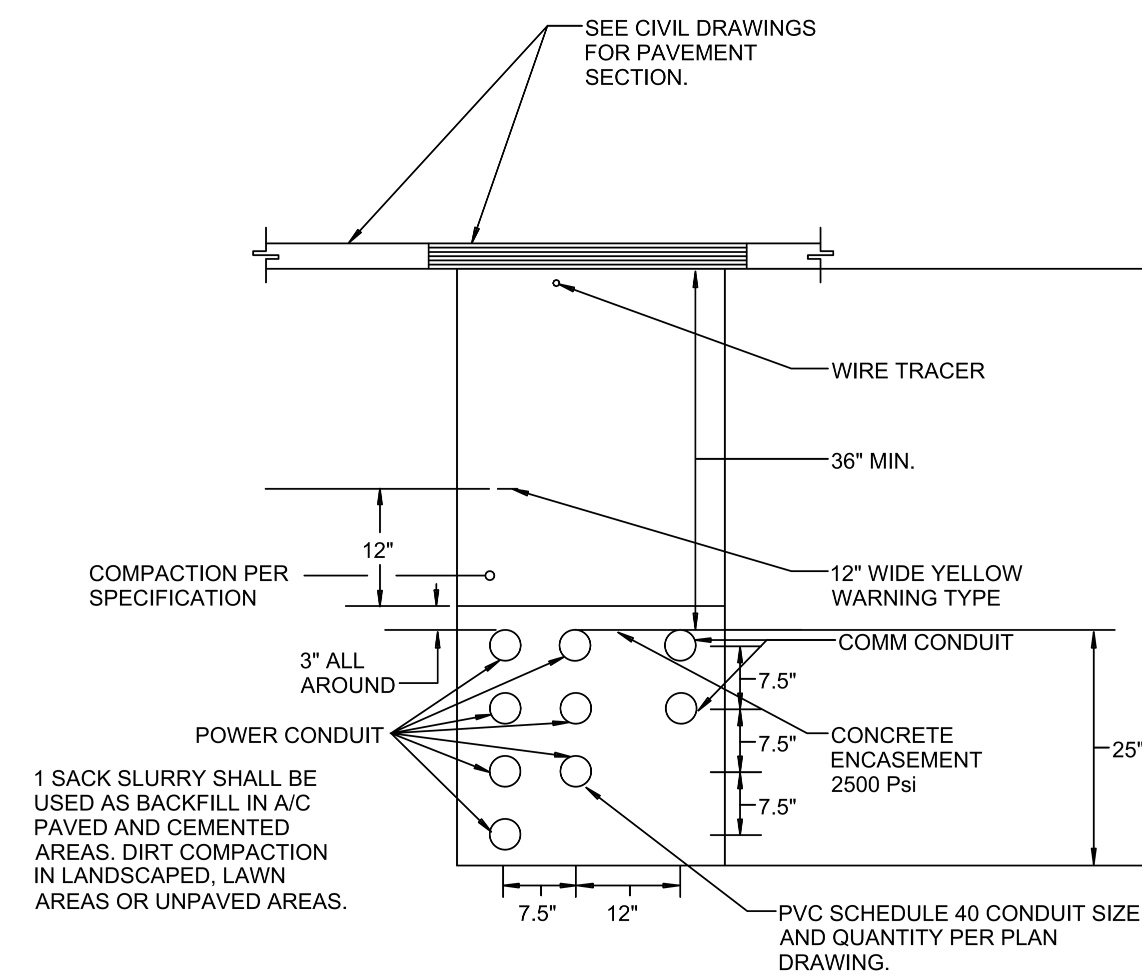

DUCT BANK DETAIL

NOT TO SCALE

2 / E5.1

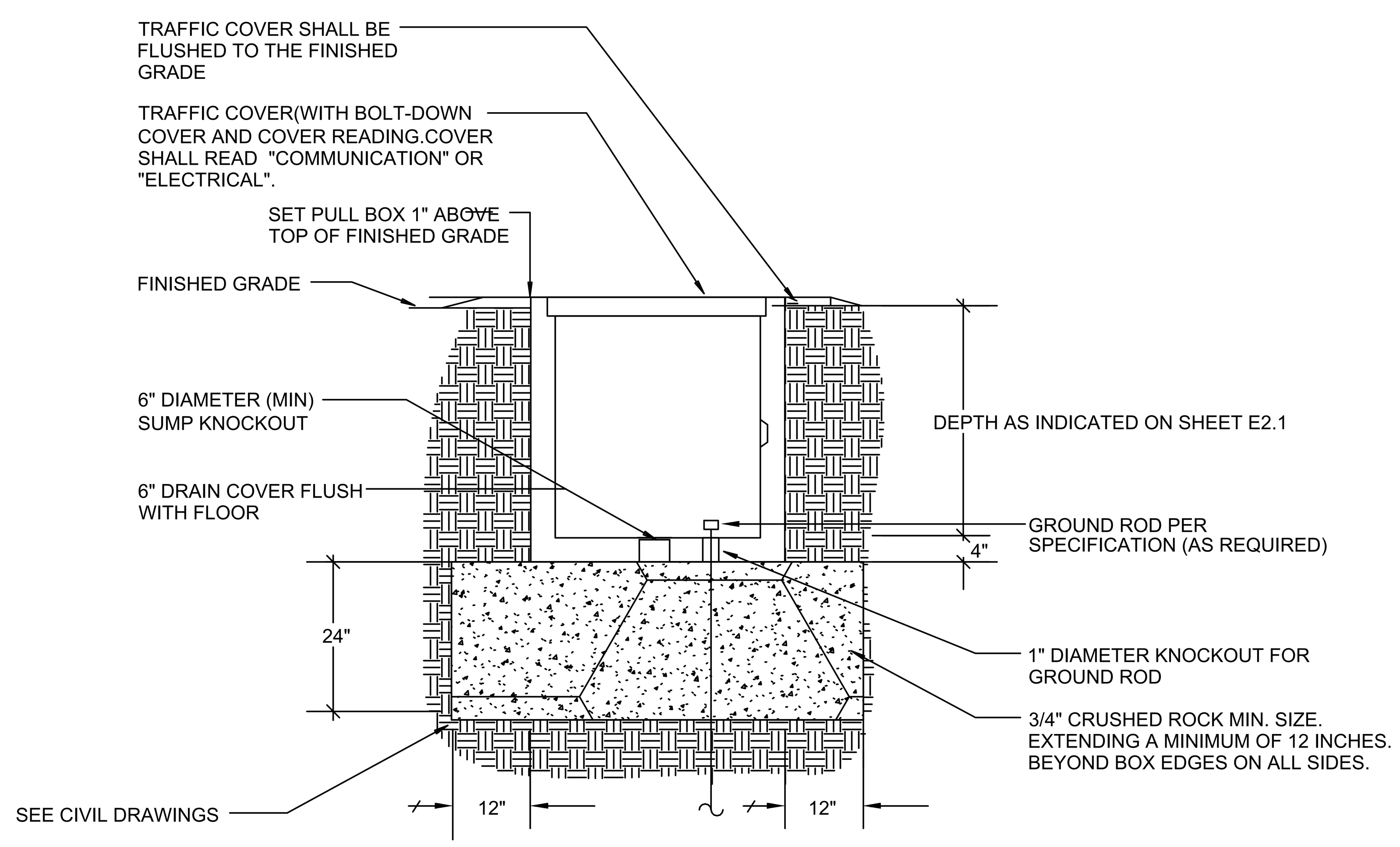

HEAVY TRAFFIC PULL BOX

NOT TO SCALE

3 / E-5.1

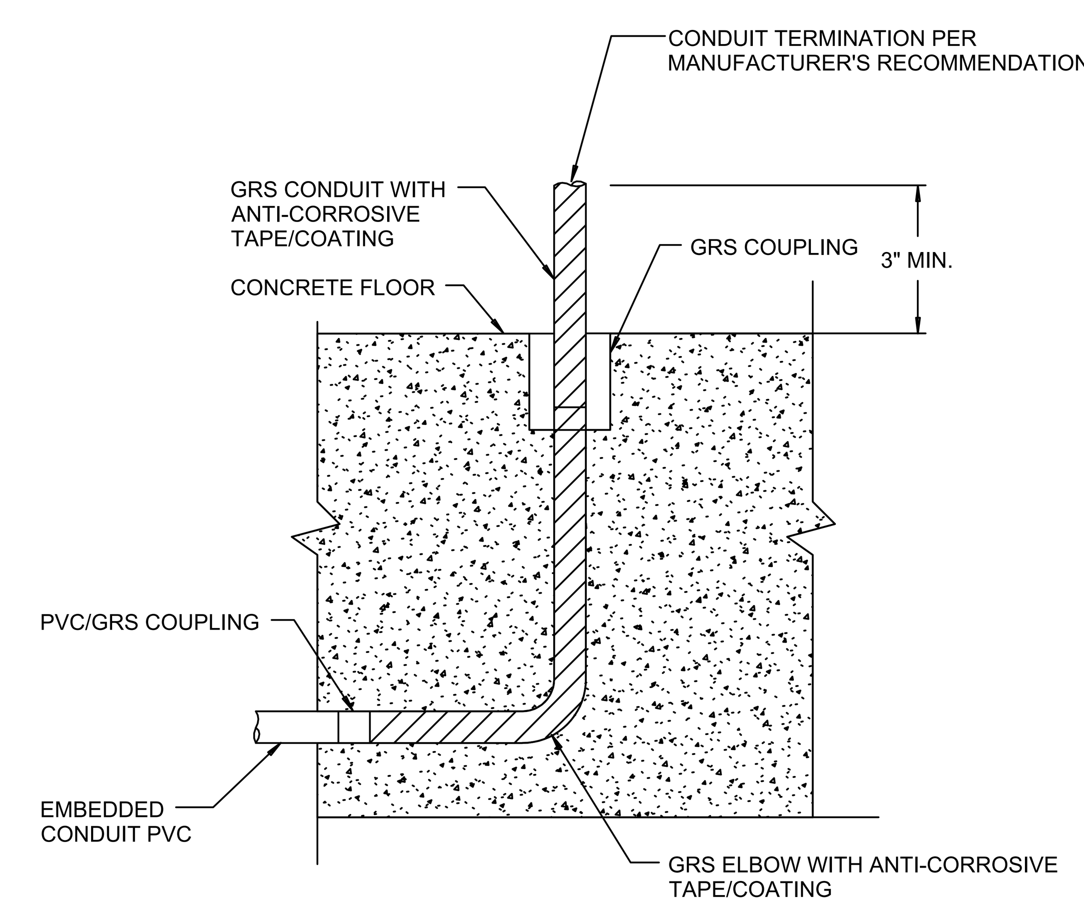

STUB UP OR STUB DOWN CONDUIT DETAIL

NOT TO SCALE

1 / E5.1

LCDG
La Cañada Design Group
Architecture
Planning
Interiors

630 N. Rosemead Boulevard, Ste 400
Pasadena, California 91107
(626) 351-4301 FAX (626)351-4302

Budlong
An MBE/SBE/DBE/LSBE Firm
Glendale/Downtown LA/Camarillo
WWW.BUDLONG.COM
JOB# - 23-010

Registration

Client Name:
COUNTY OF LOS ANGELES PUBLIC WORKS

Project Title:
DEPARTMENT OF ANIMAL CARE AND CONTROL HEADQUARTERS FENCING PROJECT

Project Address:
5898 Cherry Ave.,
Long Beach, CA 90805

SPEC #: 7856

INTERIM REVIEW DOCUMENTS

Interim review documents are incomplete and not to be used for regulatory approval, permit, or construction.

NOT FOR CONSTRUCTION

La Cañada Design Group expressly reserves its common law copyright and other property rights in these plans. These plans are not to be reproduced, changed or copied in any form or manner whatsoever, nor are they to be assigned to a third party without first obtaining the written permission and consent of La Cañada Design Group. The owner agrees to hold harmless and indemnify La Cañada Design Group against all damages, claims and losses arising out of any reuse of the plans and specifications without the authorization of La Cañada Design Group.

Milestones	Date
CD 50%	9/25/23
CD 90%	1/9/24
BACK CHECK 1	7/2/24

Revisions

No.	Description	Date

Drawn by ZR
Reviewed by VD

Plot date: Jul 02,2024 - 12:07PM

LCDG Job Number: 0646.31

Sheet Title

ELECTRICAL DETAILS

Sheet Number

E5.1

J:\23-010 LCDG P-1984 LAC DACC - Parking Lot Refurbishment\E\23-010 E5.1 ELECTRICAL DETAILS SHEET.dwg

J:\23-010 LCDG P-1984 LAC DACC - Parking Lot Refurbishment\E\23-010 E5.1 ELECTRICAL DETAILS SHEET.dwg, 7/2/2024 12:07:04 PM, zachary