COUNTY OF LOS ANGELES
DEPARTMENT OF PUBLIC WORKS
REGIONAL PROJECT NO 1105 - REDONDO BEACH AREA
LOW FLOW DIVERSION AT HERONDO ST D/S OF N. FRANCISCA AV

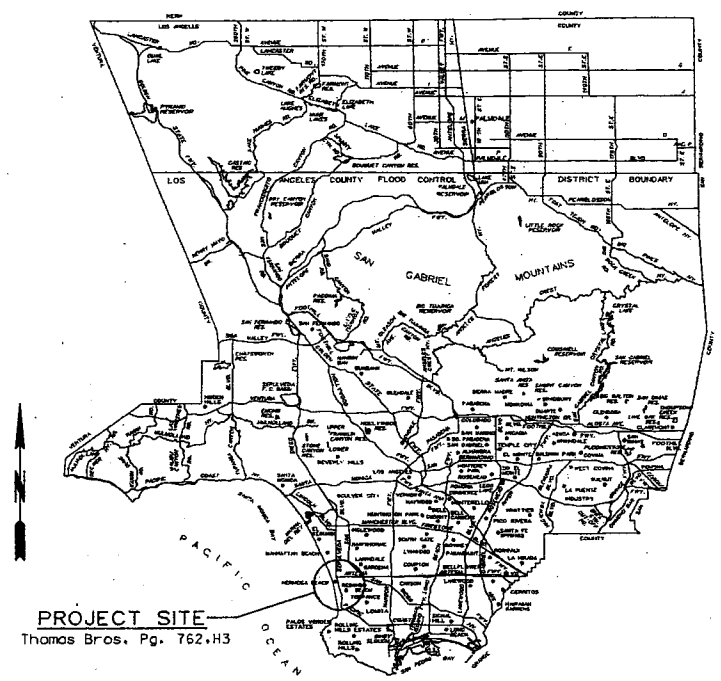

LOCATION MAP

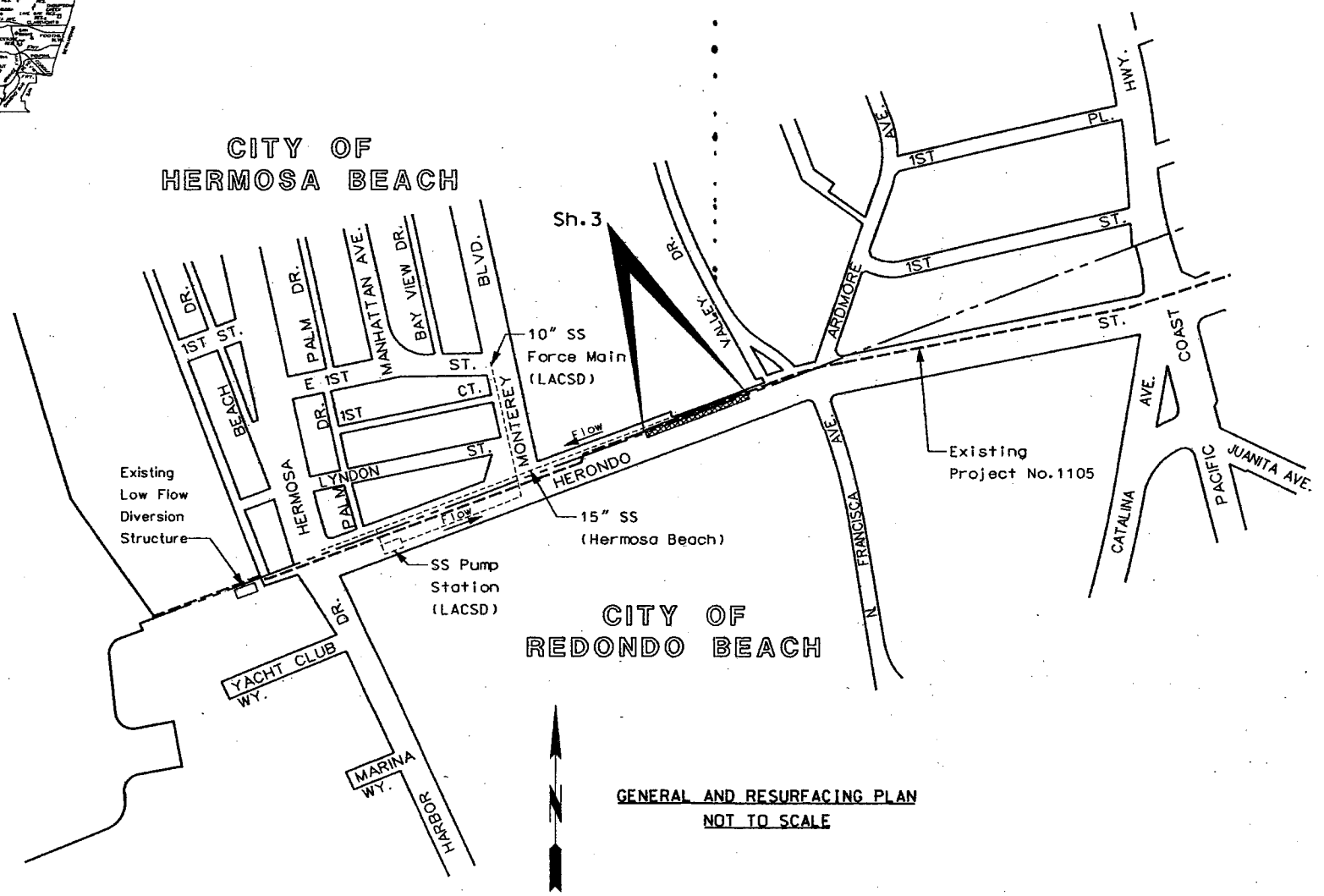

GENERAL AND RESURFACING PLAN
NOT TO SCALE

INDEX TO PROJECT PLANS

SH NO	DESCRIPTION
1	TITLE SHEET
2	GENERAL NOTES, INDEX TO STANDARD PLANS, REFERENCES, AND CONCRETE REMOVAL NOTES
3	PLAN, PROFILE, DETAILS, AND SECTIONS
4	STRUCTURAL DETAILS AND SECTIONS
5	LIFT STATION DETAILS AND SECTIONS
6	MISCELLANEOUS DETAILS
7	PUMP CONTROL SCHEMATIC AND PANEL ENCLOSURE DETAIL
8	SINGLE RC BOX STRUCTURAL SCHEDULE, NOTES, AND DETAILS
9	LOG OF BORING

UTILITIES

SEWER LINES: ..... COUNTY SANITATION DISTRICT (LACSD) AND CITY OF HERMOSA BEACH
TELEPHONE LINES: .. VERIZON
WATER LINES: ..... CALIFORNIA WATER SERVICE (CWS)
POWER LINES: ..... SOUTHERN CALIFORNIA EDISON

REFERENCES

REGIONAL PROJECT NO. 1105, UNIT 1-LINE A ..... DWG NO 364-1105-D4
SURVEY ..... PWFB 0516-228
PWFB 0516-174
PROJECT NO. 440 HERMOSA BEACH LINES D&E.... DWG NO 275-440-D9

RESURFACING SCHEDULE		
SYMBOL	EXISTING PAVEMENT	RESURFACING PAVEMENT
▩	4" AC ON 4" CMB	5" AC ON 5" CMB

NOTE:
THE RESURFACING PLAN SHOWN ABOVE IS SCHEMATIC. PAVEMENT THICKNESSES SHOWN APPLY ONLY WITHIN THE LIMITS OF EXCAVATION. THE CONTRACTOR IS RESPONSIBLE FOR DAMAGE TO PAVEMENT OUTSIDE OF THE LIMITS OF EXCAVATION.

TWO DAYS BEFORE YOU DIG
CALL USA TOLL FREE
1-800-227-2600

APPROVED JAMES A. NOYES DIRECTOR OF PUBLIC WORKS
BY James A. Noyes DEPUTY DIRECTOR — DATE 9-23-03
RECOMMENDED
BY MBS 9/18/03 ASSISTANT DEPUTY DIRECTOR — DATE 9-18-03
SUBMITTED
BY — DATE 9-18-03

DATE	MK	DESCRIPTION

REVISIONS

REGISTERED PROFESSIONAL ENGINEER — ABED MOHSEN — NO. C59117 — EXP. 6/30/07 — CIVIL — STATE OF CALIFORNIA
Abed Mohsen 9-11-03
PROJECT ENGINEER — DATE

COUNTY OF LOS ANGELES DEPARTMENT OF PUBLIC WORKS

REGIONAL PROJECT NO 1105
REDONDO BEACH AREA
LOW FLOW DIVERSION
AT HERONDO ST D/S OF N. FRANCISCA AV
TITLE SHEET

PIN FCC0000839 | JOB X5009454 | DWG 364-1105-D12.1 | SHEET 1 OF 9

DRAFTER N. STEVENSON | DESIGNER N. STEVENSON | CHECKER A. MOHSEN | CADD PROJECT FILE NAME FCC0000839-SH1

15-DF 5/02

GENERAL NOTES

1. NUMBERS IN CIRCLES INDICATE ITEMS UNDER WHICH PAYMENT WILL BE MADE.
2. ELEVATIONS SHOWN ARE IN FEET ABOVE U.S.G.S. MEAN SEA LEVEL DATUM 1929, BASED ON CITY OF LOS ANGELES 1980 ADJUSTMENT.
3. STATIONS SHOWN ON THE PLANS ARE ALONG THE CENTER LINE OF CONDUIT OR ON A LINE NORMAL TO CENTER LINE OF CONDUIT.
4. STATIONS AND INVERT ELEVATIONS OF PIPE INLETS SHOWN ON THE PROFILES ARE AT THE INSIDE FACE OF THE CONDUIT, UNLESS OTHERWISE SHOWN.
5. PIPE CONNECTIONS TO STORM DRAIN SHALL CONFORM TO SPPWC STANDARD PLAN 332-1 [OR] 334-1 UNLESS OTHERWISE SHOWN.
6. ALL PIPE IN OPEN TRENCH SHALL BE BEDDED ACCORDING TO LACDPW STANDARD PLAN 3080-2, CASEIII, EXCEPT BELL AND SPIGOT PIPE WHICH SHALL BE CASE II BEDDING, UNLESS OTHERWISE SHOWN. "W" VALUES SHALL BE SPECIFIED ON STANDARD PLAN 3080-2 FOR CASE III BEDDING, NOTES (a), (b), AND (c). IF THE "W" VALUE AT THE TOP OF THE PIPE IS EXCEEDED, THE BEDDING SHALL BE MODIFIED, AND/OR PIPE OF ADDITIONAL STRENGTH SHALL BE PROVIDED. THE PROPOSED MODIFICATION SHALL BE APPROVED BY THE DEPARTMENT.
7. ALL EXISTING UTILITIES SHOWN ON THE PLANS ARE THE PROPERTY OF THE AGENCIES LISTED HERE ON, UNLESS OTHERWISE NOTED.
8. EXISTING UTILITIES SHALL BE MAINTAINED IN PLACE BY THE CONTRACTOR, UNLESS OTHERWISE NOTED, AND ALL UTILITIES CROSSING THE TRENCH SHALL BE TEMPORARILY SUPPORTED TO THE SATISFACTION OF THE OWNER.
9. THE CONTRACTOR SHALL MAKE EXPLORATORY EXCAVATIONS TO DETERMINE THE DEPTH AND LOCATION OF EXISTING UTILITIES WHERE SO INDICATED BY THE SYMBOL "Δ".
10. CONCRETE BACKFILL SHALL BE PROVIDED AROUND PIPE 21 INCHES IN DIAMETER OR LESS WHERE THE COVER IS EQUAL TO OR LESS THAN 2'-0". AROUND PIPE GREATER THAN 21 INCHES IN DIAMETER BUT LESS THAN 39 INCHES WHERE THE COVER IS LESS THAN 1'-3', AND FOR 39" OR GREATER WHERE THE COVER IS LESS THAN 1'-0". THE CONCRETE BACKFILL SHALL BE AS SPECIFIED ON LACDPW STANDARD PLAN 3080-2, NOTE 7.
11. ALL RESURFACING, CURBS, GUTTERS, SIDEWALKS, DRIVEWAYS, AND OTHER EXISTING IMPROVEMENTS TO BE RECONSTRUCTED SHALL BE CONSTRUCTED AT THE SAME ELEVATION AND LOCATION AS THE EXISTING IMPROVEMENTS, UNLESS OTHERWISE NOTED.
12. THE WORK SHOWN ON THESE PLANS REQUIRES THE PRIME CONTRACTOR TO HAVE A VALID CLASS A OR C42 LICENSE ISSUED BY THE STATE OF CALIFORNIA.
13. ALL FIELD BOOK REFERENCES ARE TO LOS ANGELES COUNTY DEPARTMENT OF PUBLIC WORKS FIELD BOOKS, UNLESS OTHERWISE SHOWN.

CONCRETE REMOVAL NOTES

1. WHERE REINFORCEMENT SHALL BE RETAINED THROUGH THE NEW JOINT, MAKE A 1-1/2 INCH DEEP SAW CUT ON ALL EXPOSED CONCRETE SURFACES ALONG THE REMOVAL LIMITS. DO NOT CUT OR DAMAGE EXISTING REINFORCEMENT.
2. USING HAND-HELD EQUIPMENT, CAREFULLY REMOVE THE CONCRETE FOR THE FULL DEPTH OF THE WALL OR SLAB AND FOR A MINIMUM DISTANCE FROM THE SAW CUT EQUAL TO THE LONGEST EXTENSION OF THE BARS TO BE EXTENDED INTO THE NEW CONSTRUCTION. THIS EXTENSION SHALL BE 30 BAR DIAMETERS, UNLESS OTHERWISE NOTED.
3. CUT EXISTING REINFORCEMENT TO THE REQUIRED BAR EXTENSION.
4. IF IT WILL NOT DAMAGE THE CONCRETE TO BE LEFT IN PLACE, THE REMAINING CONCRETE MAY BE REMOVED BY ANY SUITABLE METHOD UPON APPROVAL OF THE ENGINEER WHO SHALL BE THE SOLE JUDGE OF THE USE OF ANY CONCRETE REMOVAL EQUIPMENT. HOWEVER, EXPLOSIVES OR A WRECKING BALL (OR OTHER SIMILAR DEVICE) WILL NOT BE PERMITTED.

INDEX TO STANDARD PLANS

LACDPW

STD. PLAN	TITLE
3080-2	PIPE BEDDING IN TRENCHES
3090-1	CRITERIA FOR THE DESIGN OF SHORING FOR EXCAVATIONS
3091-1	SAMPLE SHEET FOR USE AS A GUIDE IN PREPARING CALCULATIONS FOR SHORING OF EXCAVATIONS
3093-1	UNIFIED SOIL CLASSIFICATION SYSTEM
6008-1	MINIMUM PUBLIC SAFETY REQUIREMENT FOR OPEN EXCAVATIONS

SPPWC

STD. PLAN	TITLE
200-2	PRECAST CONCRETE SEWER MANHOLE
208-1	BREAKING INTO EXISTING MANHOLES
323-1	MANHOLE - CONCRETE BOX STORM DRAIN
331-2	JUNCTION STRUCTURE - PIPE TO PIPE INLET ID ≥ 24" OR OD > ½MAINLINE ID
332-1	JUNCTION STRUCTURE - PIPE TO PIPE INLET ID < 24"
333-1	JUNCTION STRUCTURE - PIPE TO RCB
341-1	TRANSITION STRUCTURE - SINGLE RCB TO SINGLE RCB
635-2	STEEL STEP

CITY OF LOS ANGELES

STD. PLAN	TITLE
S-121-1	PLASTIC LINER PLATE DETAILS
S-140-0	SEWER MAINTENANCE HOLE - GENERAL

STRUCTURAL NOTES FOR WELLS AND VAULTS

1. ALL CONCRETE SHALL BE CLASS 650-C-4000, TYPE II LOW ALKALI PORTLAND CEMENT, UNLESS OTHERWISE NOTED.
2. CONSTRUCTION JOINTS: ROUGHEN TO ¼ INCH AMPLITUDE MINIMUM.
3. ALL REINFORCEMENT BARS SHALL CONFORM TO THE REQUIREMENTS OF ASTM A615, INCLUDING SUPPLEMENT S1, GRADE 60.
4. WELDING OF REINFORCING BARS IS NOT PERMITTED.
5. ALL FOUNDATIONS SHALL BE POURED AGAINST UNDISTURBED EARTH OR STRUCTURAL BACKFILL.
6. WELDING RODS SHALL BE ELECTRODE TYPE 309.
7. WELDS SHALL BE UNIFORM IN SIZE AND APPEARANCE AND FREE OF PINHOLES, POROSITY, AND OTHER DEFECTS.
8. SLUICE GATE SHALL WITHSTAND UP TO 30 FEET OF UNSEATING HEAD AND BE MANUFACTURED BY RODNEY HUNT, WATERMAN INDUSTRIES OR AGENCY APPROVED EQUAL. THE GATE SHALL BE SELF-CONTAINED WITH STAINLESS STEEL NON-RISING STEM AND SALT WATER RESISTANT WALL THIMBLE. ALL MOUNTING HARDWARE, ANCHOR BOLTS, AND NUTS SHALL BE TYPE 316 STAINLESS STEEL.
9. PLACING THE REINFORCEMENT SHALL CONFORM TO THE LATEST AMERICAN CONCRETE INSTITUTE'S "BUILDING CODE REQUIRMENTS FOR REINFORCED CONCRETE SECTION" 7.3.
10. TRANSVERSE CONSTRUCTION JOINTS SHALL NOT BE PLACED WITHIN 30 INCHES OF MANHOLE OR JUNCTION STRUCTURE OPENING.
11. EXPOSED EDGES OF CONCRETE MEMBERS SHALL BE ROUNDED OR BEVELED.

DATE	MK	DESCRIPTION

REVISIONS

REGISTERED PROFESSIONAL ENGINEER — ABED MOHSEN — NO. C59117 — EXP. 6/30/07 — CIVIL — STATE OF CALIFORNIA

Abed Mohsen 9-11-03
PROJECT ENGINEER DATE

COUNTY OF LOS ANGELES DEPARTMENT OF PUBLIC WORKS

REGIONAL PROJECT NO. 1105
REDONDO BEACH AREA
LOW FLOW DIVERSION
AT HERONDO ST D/S OF N. FRANCISCA AV
GENERAL NOTES, INDEX TO STANDARD PLANS, REFERENCES, AND CONCRETE REMOVAL NOTES

PIN FCC0000839 | JOB X5009454 | DWG 364-1105-D12.2 | SHEET 2 OF 9

PS-DF 5/99

DRAFTER N. STEVENSON | DESIGNER N. STEVENSON | CHECKER A. MOHSEN | CADD PROJECT FILE NAME FCC0000839-SHEET2 | REVIEWED | DATE 9/15/03

DATE: DATE3 TIME: TIME1 FILE: DFILE3

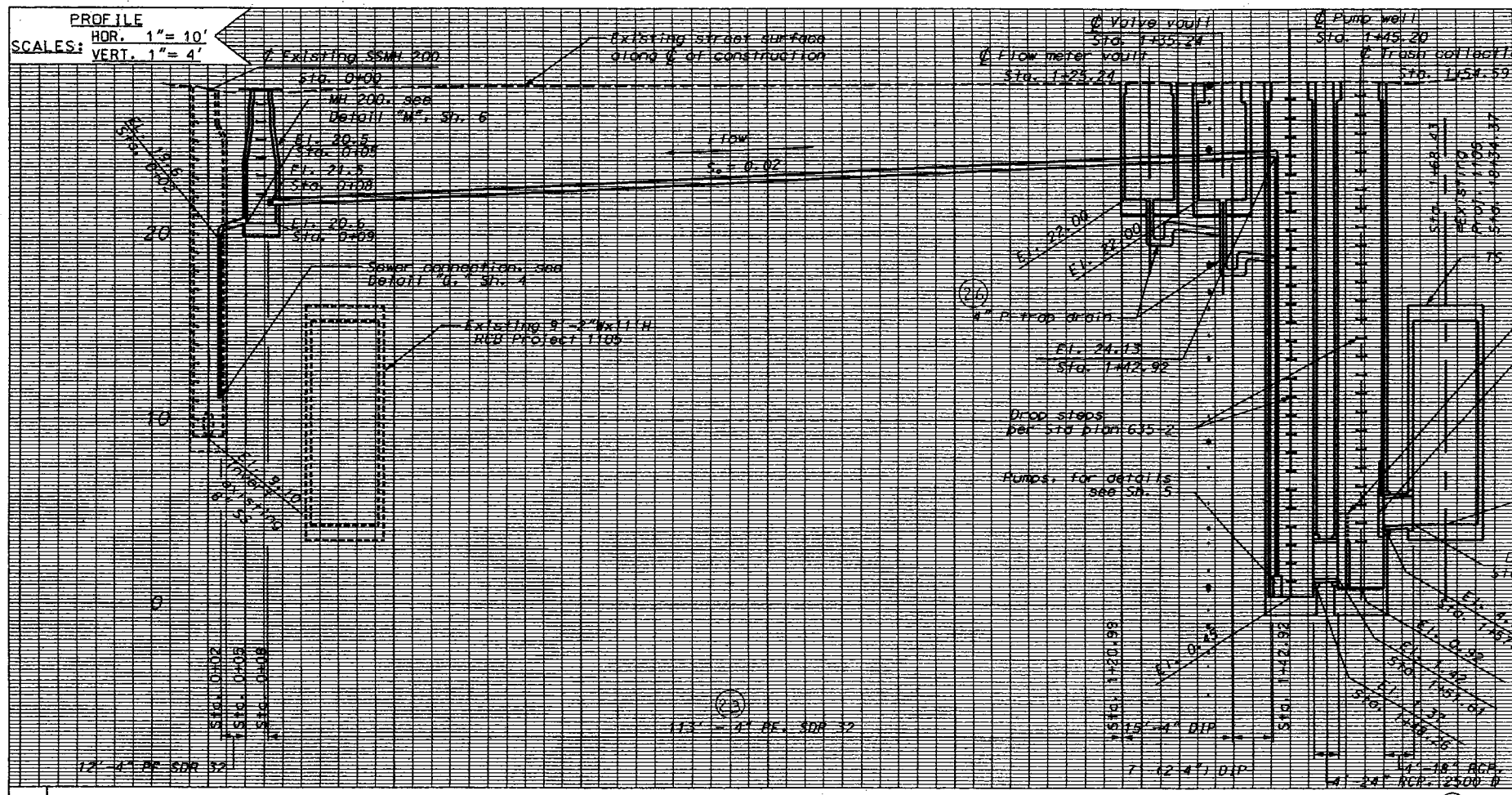

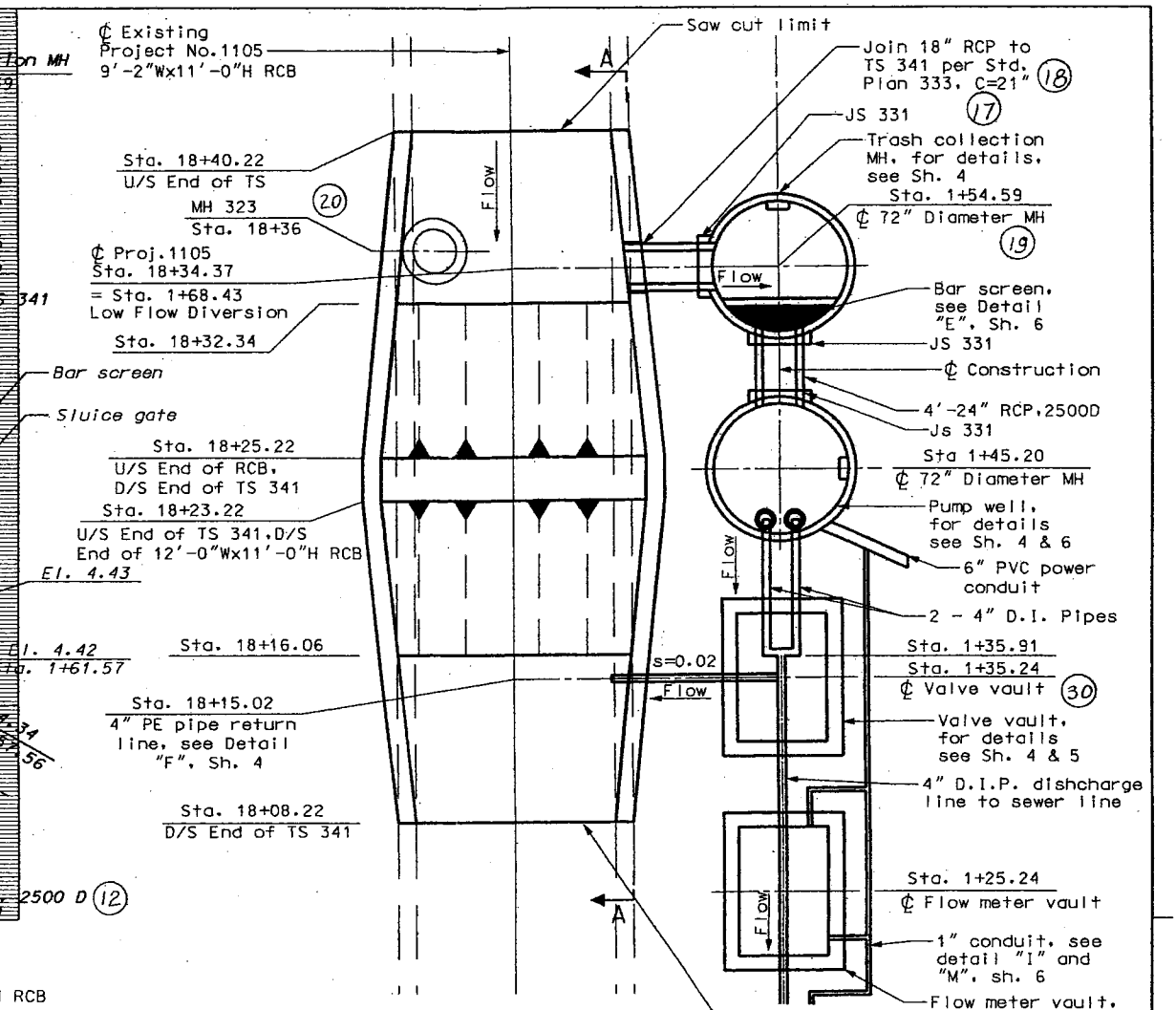

DETAIL "A"
DIVERSION BOX
NOT TO SCALE

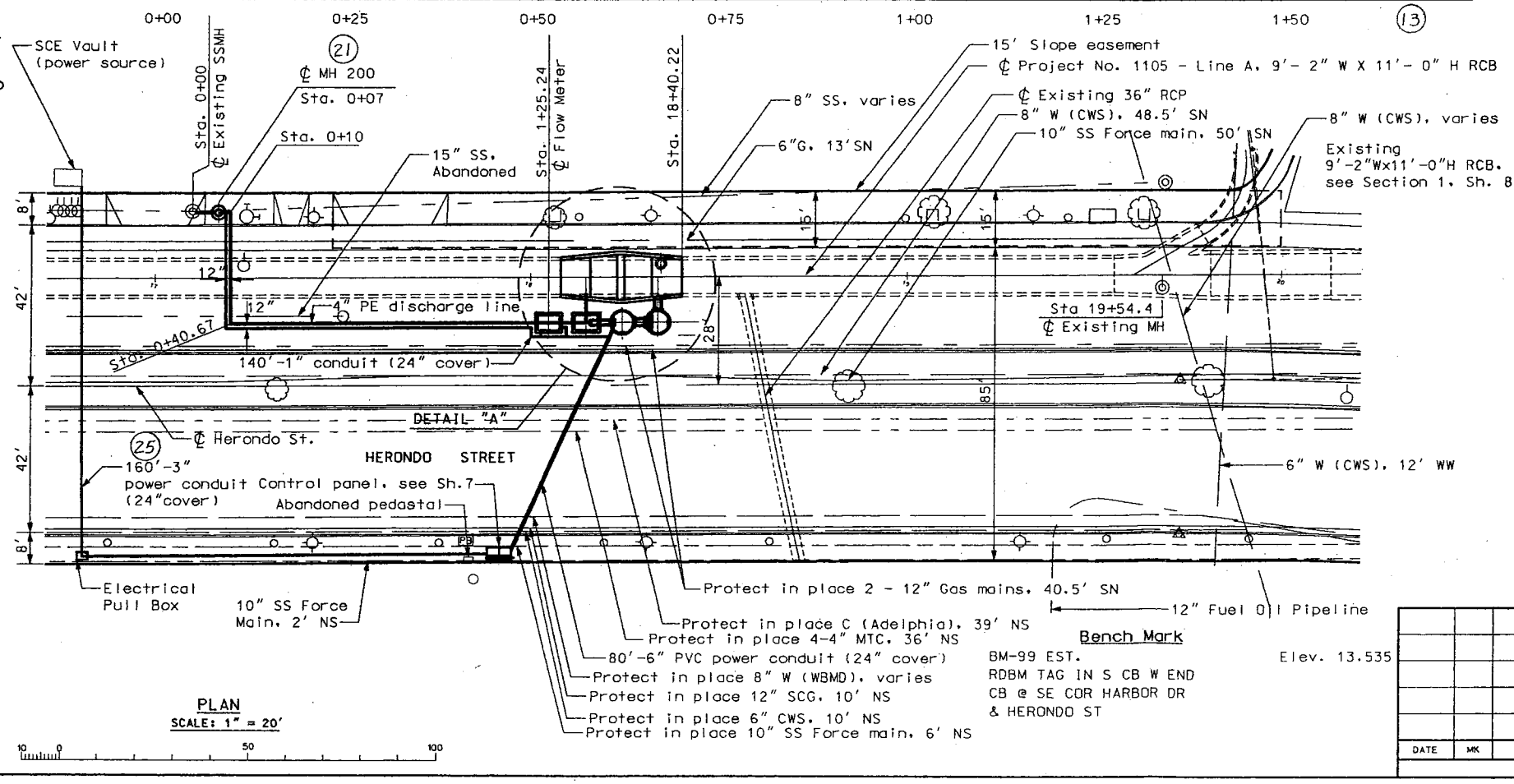

PLAN
SCALE: 1" = 20'

Bench Mark
BM-99 EST.
RDBM TAG IN S CB W END CB @ SE COR HARBOR DR & HERONDO ST
Elev. 13.535

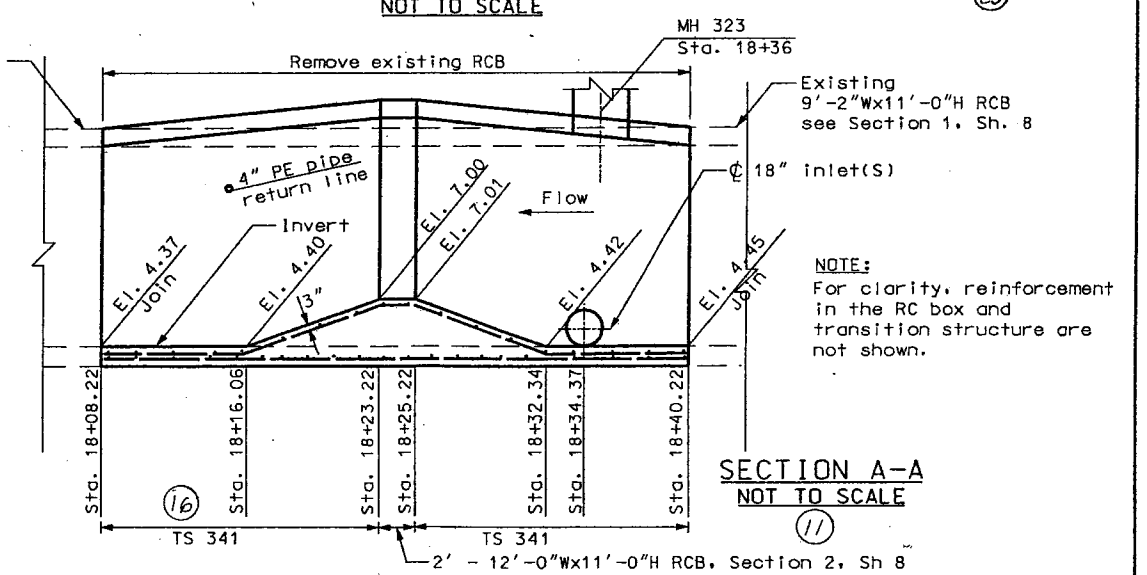

NOTE:
For clarity, reinforcement in the RC box and transition structure are not shown.

SECTION A-A
NOT TO SCALE

DATE	MK	DESCRIPTION

REVISIONS

REGISTERED PROFESSIONAL ENGINEER ABED MOHSEN NO. C 59117 EXP. 6/30/09 CIVIL STATE OF CALIFORNIA

PROJECT ENGINEER 9-19-03 DATE

COUNTY OF LOS ANGELES DEPARTMENT OF PUBLIC WORKS

REGIONAL PROJECT NO. 1105
REDONDO BEACH AREA

LOW FLOW DIVERSION
AT HERONDO ST D/S OF FRANCISCA AV
PLAN, PROFILE, DETAILS, AND SECTIONS

PIN FCC0000839 | JOB X5009454 | DWG 364-1105-D12.3 | SHEET 3 OF 9

REVIEWED BY DATE 9-19-03
CADD PROJECT FILE NAME FCC0000839-SHEET3
CHECKER A. MOHSEN
DESIGNER N. STEVENSON
DRAFTER N. STEVENSON

DATE: $DATE$ TIME: $TIME$ FILE: $FILE$

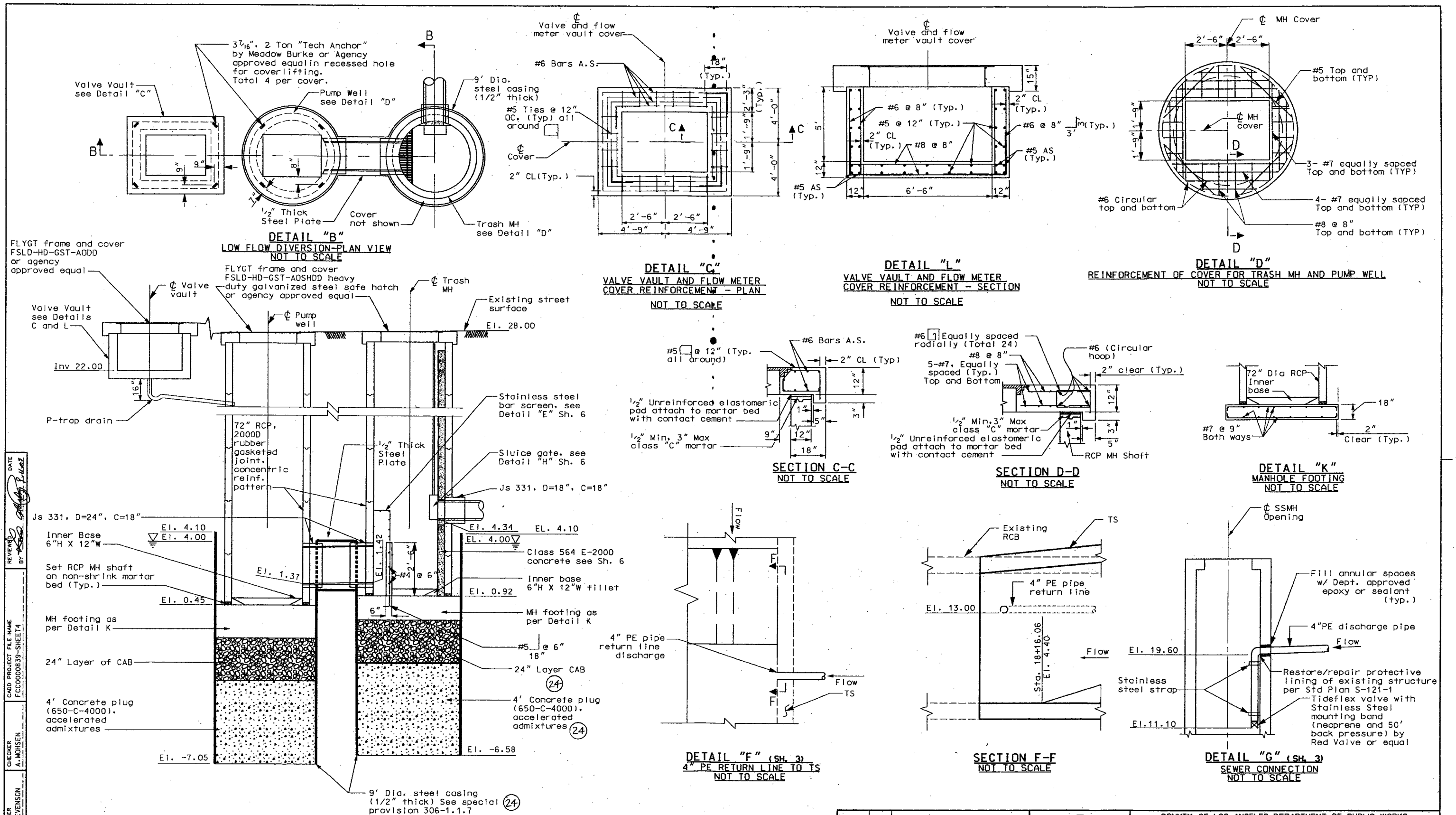

DATE	MK	DESCRIPTION

REVISIONS

REGISTERED PROFESSIONAL ENGINEER — ABED MOHSEN — RE. C59117 — EXP. 6/30/07 — CIVIL — STATE OF CALIFORNIA

PROJECT ENGINEER — DATE

COUNTY OF LOS ANGELES DEPARTMENT OF PUBLIC WORKS

REGIONAL PROJECT NO. 1105
REDONDO BEACH AREA

LOW FLOW DIVERSION
AT HERONDO ST D/S OF N. FRANCISCA AV
STRUCTURAL DETAILS AND SECTIONS

PIN FCC0000839 | JOB X5009454 | DWG 364-1105-D12.4 | SHEET 4 OF 9

DRAFTER N. STEVENSON | DESIGNER N. STEVENSON | CHECKER A. MOHSEN | CADD PROJECT FILE NAME FCC0000839-SHEET4 | REVIEWED BY | DATE

DATE: $DATE$ TIME: $TIME$ FILE: $FILE$

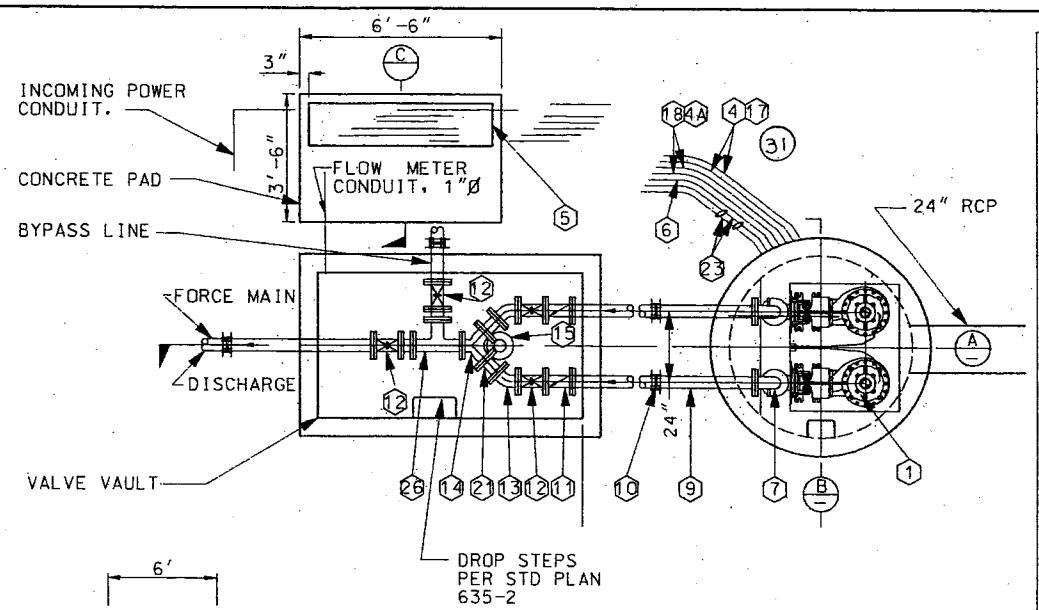

PLAN (14)
SEWER LIFT STATION

GENERAL NOTES

1. THE CONTRACTOR SHALL VERIFY ALL DIMENSIONS AND SITE CONDITIONS PRIOR TO BEGINNING CONSTRUCTION.
2. SUPERVISON FOR INSTALLATION, START-UP AND TESTING TO BE PROVIDED BY MANUFACTURER'S REPRESENTATIVE AS PART OF THE EQUIPMENT PURCHASE CONTRACT.
3. ALL FITTINGS AND VALVES SHALL BE CAST IRON, CLASS 125.
4. ALL ELECTICAL WIRING AND EQUIPMENT INSTALLED IN THE "WET WELL" SECTION MUST COMPLY W/ ARTICLE 22 OF THE ELECTRICAL SAFETY ORDERS FOR CLASS 1, DIVISION 1, HAZARDOUS LOCATION PROVISIONS OF THE "NATIONAL ELECTRICAL CODE" & ALL OTHER APPLICABLE LOCAL CODES AND ORDINANCES.
5. ALL PE PIPES AND CONDUITS SHALL BE SDR 32, OR APPROVED EQUAL.
6. ALL ELECTRICAL WIRE SHALL BE "THWN" COPPER CONDUCTOR, OR APPROVED EQUAL.
7. THE FLOOR OF THE WET WELL SHALL BE SMOOTH AND LEVEL.
8. PUMP MOTORS WILL PULL EXCESS AMPS IF RUNNING BACKWARDS.
9. ALL PRACTICES AND PROCEDURES, MATERIALS AND PLACEMENT OF MATERIALS SHALL CONFORM IN EVERY RESPECT TO THE STANDARD PLANS AND SPECIFICATIONS.
10. ALL NUTS, BOLTS, AND WASHERS SHALL BE 304 S.S./316 S.S. NO EXCEPTIONS.
11. INSTRUMENTATION TO BE RUN ON A SEPARATE CONDUIT.
12. ALL FITTINGS AND VALVES SHALL BE 4" DIA. UNLESS OTHERWISE NOTED.

MATERIALS SCHEDULE

ITEM	DESCRIPTION	QTY
1	SUBMERSIBLE SEWAGE PUMP, ESSCO MODEL NO.4X12 OR AGENCY APPROVED EQUAL, SIZE 4", HEAVY DUTY VORTEX TORQUE FLUID PUMP, 90 GPM AT 23.4 FT. T.D.H.; RELIANCE SUBMERSIBLE MOTOR, 3 H.P. AT 1170 R.P.M. U.L. TEXP. CLASS 1, GROUP D, W/50 FT. OF 9 WIRE CONTROL & POWER CABLE. TWO SEPARATE SEALS, OIL LUBRICATED 30 DAY WARNING SYSTEM, N/C THERMAL PROTECTION W/ ESSCO COOL AGIVENT APPARATUS, (PATENT NO. 4,134,711)	2
2	4" SPARK PROOF SLIDE RAIL ASSEMBLY FOR USE IN HAZARDOUS LOCATIONS. (NO EXCEPTIONS)	2
3	LIFTING CABLE, .375" x .4375" x 18' S.S., NYLON COVERED, 6300' lb. TENSILE STRENGTH.	2
4	POWER CABLE, SHALL BE U.L. LISTED .675" Ø (1 REQD) FOR EACH PUMP MOTOR.	2
4A	CONTROL CABLE, SHALL BE U.L. LISTED .485" Ø.	2
5	PUMP CONTROL PANEL; ESSCO STYLE 'D', NEMA 4X, U.L. LISTED OR AGENCY APPROVED EQUAL, VANDAL PROOF, DOUBLE DOOR, FACTORY WIRED AND TESTED; PRESET ELECTRICAL CONTROL PANEL; INDICATING LIGHTS AS REQD., RELAYS, HOA; COMBINATION STARTER W/ QUICK-TRIP HEATERS; PUMP ALTERNATOR; INTRINSICALLY SAFE FLOAT SWITCH CONTROL SYTEM, W/ METER SOCKET AND MAIN DISCONNECT AND GAS DETECTOR.	1
6	CONDUIT FOR THE FLOAT SWITCH CABLE, .75"Ø.	4
7	FLANGED CAST IRON 90° BEND.	4
8	WASH DOWN AND VACUUM BREAKER. (ESSCO PATENT)	2
9	FLANGED x PLAIN END CAST IRON SPOOL.	2
10	CAST IRON COUPLING ADAPTER (BAKER STYLE OR APPROVED EQUAL).	2
11	FLANGED SWING CHECK VALVE, W/ LEVER & WEIGHT. (IBBM)	2
12	FLANGED GATE VALVE, NON RISING STEM. (IBBM)	4
13	FLANGED CAST IRON 45° BEND.	2
14	FLANGED CAST IRON TRUE WYE.	1
15	PE DRAIN AND P-TRAP.	1
16	EYE BOLT, 2.25" Ø S.S.	1
17	ELECTRICAL CONDUIT FOR MOTOR POWER CABLE, 1"Ø.	2
18	CONDUIT MOTOR CONTROL CABLE, .75"Ø.	2
19	FLANGED AND FLANGED D.I. PIPE.	2
20	2" 304 STAINLESS STL. SCH. 40 GUIDE PIPE.	8
21	FLANGED BY FLANGED CIP SPOOL (SPACER).	2
22	FLOAT SWITCHES .375" Ø CORD.	4
23	2 SPARE CONDUITS .75"Ø.	2
24	WATERMAN FLAP GATE. MODEL # F-10 OR AGENCY APPROVED EQUAL.	1
25	INFRARED GAS DETECTOR, DRAGER MODEL POLYTRON IR OR AGENCY APPROVED EQUAL.	1
26	D.I. TEE.	1
27	WELD 1.75" DIA. S.S. LIFTING RING TO THE CABLE AT 6' C.C.	4

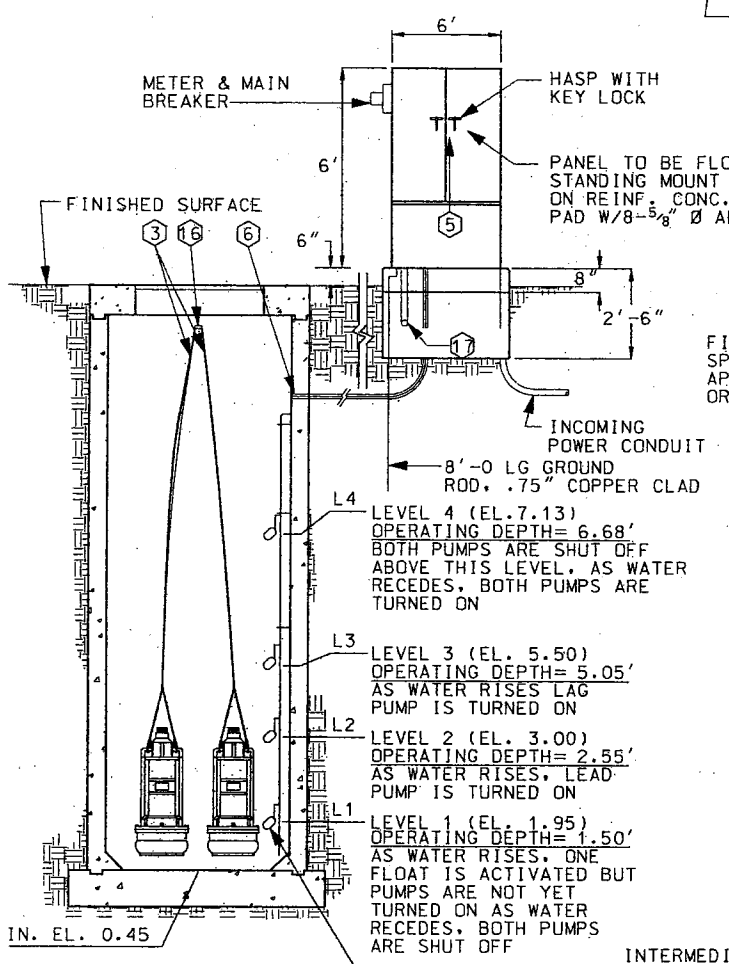

SECTION (B)

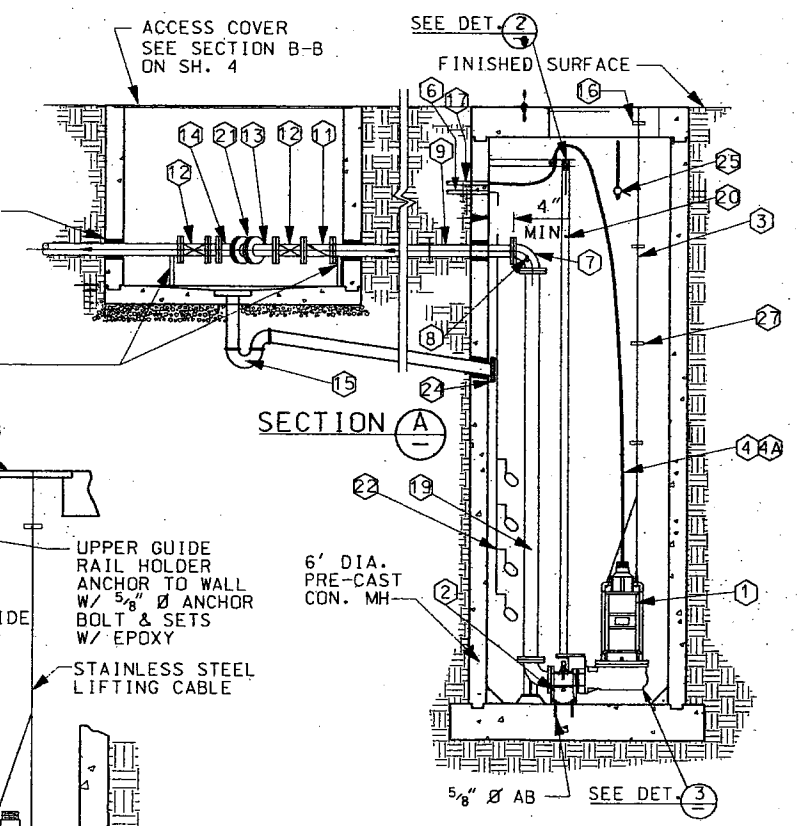

SECTION (A)

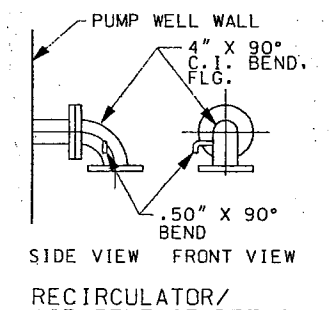

RECIRCULATOR/ AIR RELEASE DETAIL

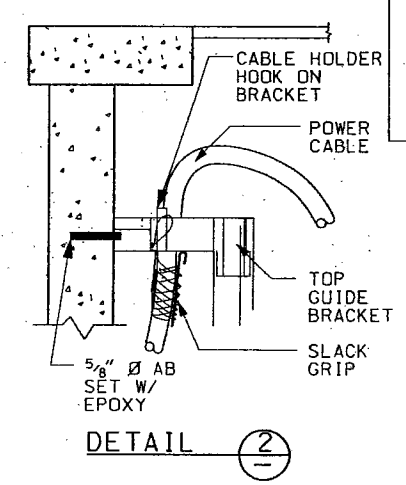

DETAIL (2)

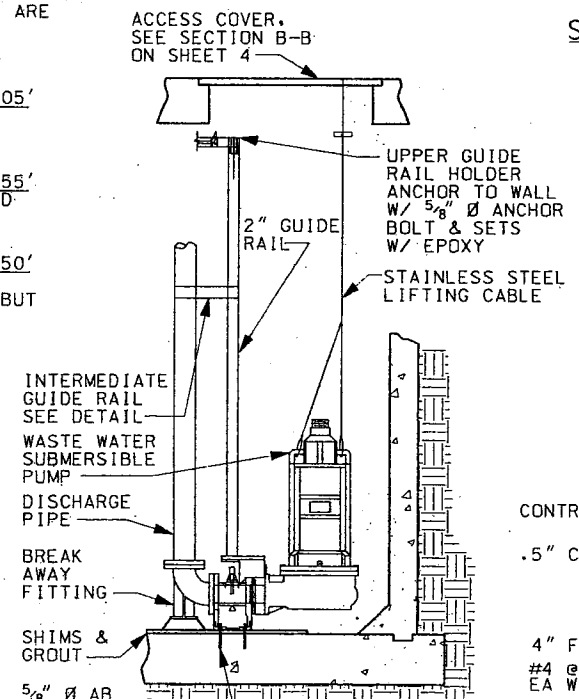

DETAIL (3)

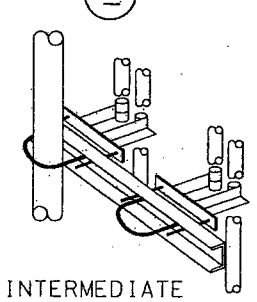

INTERMEDIATE GUIDE BRACKET

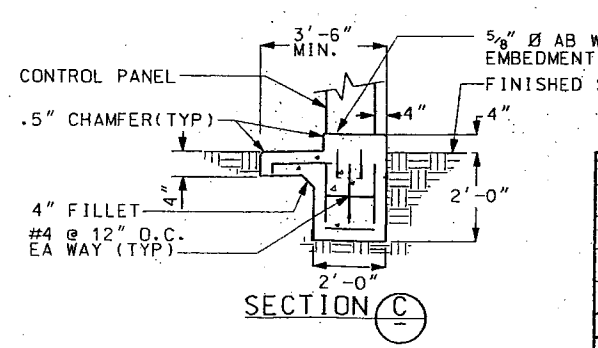

SECTION (C)

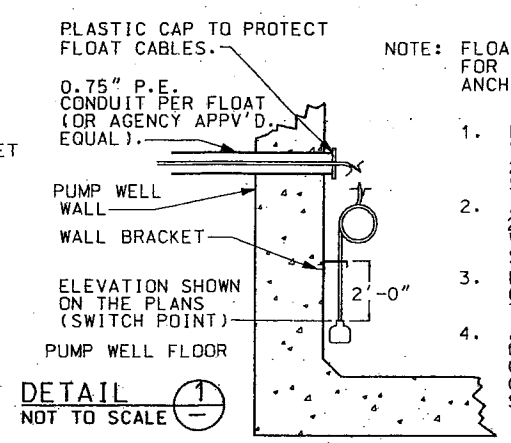

DETAIL (1)
NOT TO SCALE

NOTE: FLOAT AND BRACKET INSTALLATION FOR "S" TYPE FLOAT SWITCH PER ANCHOR SCIENTIFIC INC.

1. MOUNT THE WALL BRACKET WITH STAINLESS STEEL ANCHORS 24" ABOVE THE FLOAT LEVEL SHOWN ON THE PLANS.
2. ANCHOR THE FLOAT CABLE EVERY 2 FEET TO THE PUMP WELL WALL WITH NEOPRENE LINED STAINLESS STEEL CLAMPS AND #10 SCREWS.
3. LEAVE 2 TO 4 FEET OF CABLE COILED AND TIED OFF AT THE TOP OF THE FLOAT BRACKET.
4. AN INTRINSIC RELAY IS PART OF THE FLOAT CIRCUIT THE FLOAT CABLE(S) MUST BE IN ITS OWN CONDUIT, CHECK THE CONTROL SCHEMATIC.

DATE	MK	DESCRIPTION

REVISIONS

REGISTERED PROFESSIONAL ENGINEER ABED MOHSEN NO. C59117 EXP. 6/30/07 CIVIL STATE OF CALIFORNIA

Abed Mohsen 9-11-02
PROJECT ENGINEER DATE

COUNTY OF LOS ANGELES DEPARTMENT OF PUBLIC WORKS

REGIONAL PROJECT NO. 1105
REDONDO BEACH AREA

LOW FLOW DIVERSION
AT HERONDO ST D/S OF N. FRANCISCA AV
LIFT STATION DETAILS AND SECTIONS

PINFCC0000839 | JOB X5009454 | DWG364-1105-D12.5 | SHEET 5 OF 9

DRAFTER ESSCO | DESIGNER ESSCO | CHECKER P. CHANG | CADD PROJECT FILE NAME FCC0000839-SHEETS. | REVIEWED BY | DATE

DATE: %DATE% TIME: %TIME% FILE: %FILE%

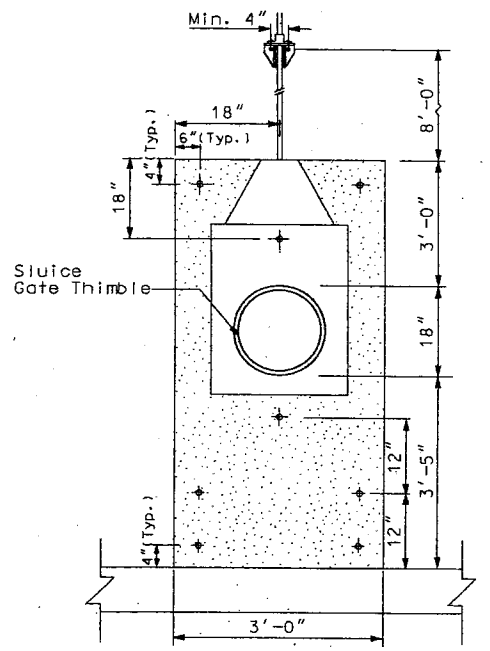

SECTION H-H
NOT TO SCALE

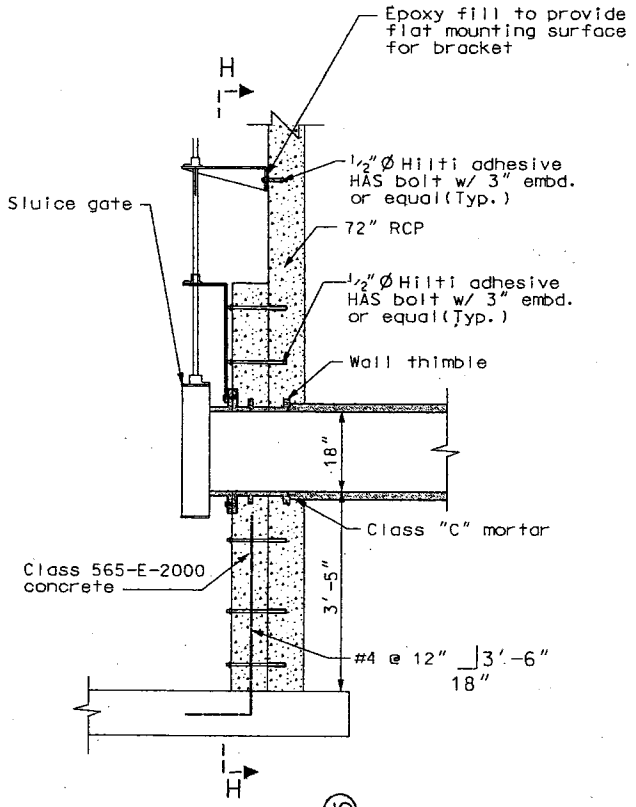

10

DETAIL "H" (SHEET 4)
NOT TO SCALE

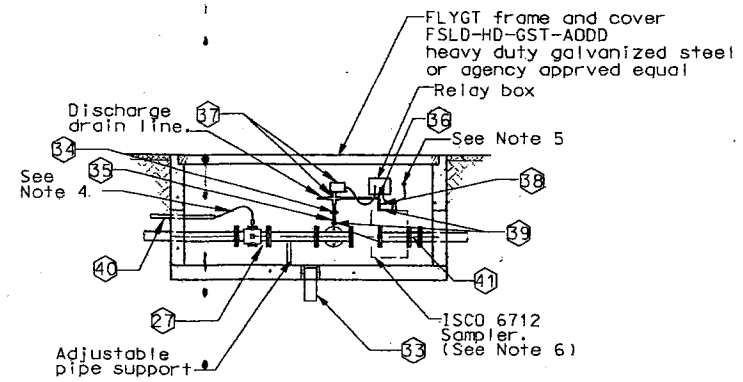

SECTION I-I
NOT TO SCALE

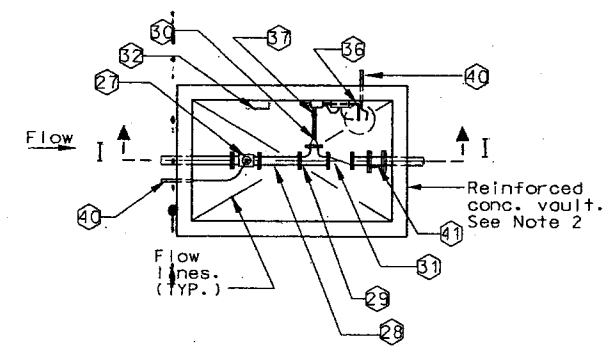

DETAIL "I" (SH. 3&7)
FLOW METER AND SAMPLING PORT VAULT
NOT TO SCALE

MATERIALS SCHEDULE		
ITEM	DESCRIPTION	QTY
27	FLOW METER. SEE NOTE 1.	1
28	4" -13" LONG MIN. SPOOL WITH FLANGED ADAPTER.	1
29	4"X4"X4" TEE.	1
30	4"X1" REDUCER.	1
31	4" SWING CHECK VALVE.	1
32	STEPS PER STANDARD-PLAN 635.	3
33	4" PE P-TRAP	1
34	1" STAINLESS STEEL PIPE STRAP (TYP).	1
35	1" PE- SDR32 PIPE.	1
36	1" 90° ELBOW.	2
37	1" THREE WAY VALVE AND CONTROL.	1
38	1"x3/4" REDUCER.	1
39	SAMPLING PORT AND PRV. SEE NOTE 3.	1
40	1" PE-SDR32 CONDUIT.	1
41	4" DI PIPE TO 4" PE PIPE FLANGED ADAPTER	1
42	4" PRESSURE REDUCING VALVE	1

Notes:

1. Magnetic flow meter system shall consist of an ISCO 4" UniMag flow tube, ISCO 4220 flow meter, and ISCO UniPulse Transmitter or agency approved equals.
2. Vault shall be per detail C on sheet 4 . The contractor shall furnish and install a spring loaded locking vault access hatch rated for H-20 loading. The access hatch shall not have hinges located on same side of the vault as the spring port.
3. Pressure reducing valve (PRV) and sampling port are used for connection to an ISCO 6712 portable sampler. PRV shall be ISCO model SPA1082 with ISCO model SPA665 sampling port or agency approved equals.
4. Wiring line to 4220 Transmeter.
5. Wiring line from 4220 Flow Meter Data Logger.
6. ISCO 6712 Sampler to be provided by others.
7. Wiring line from 4220 Flow Meter Data Logger with 4 feet of excess cable inside the manhole.

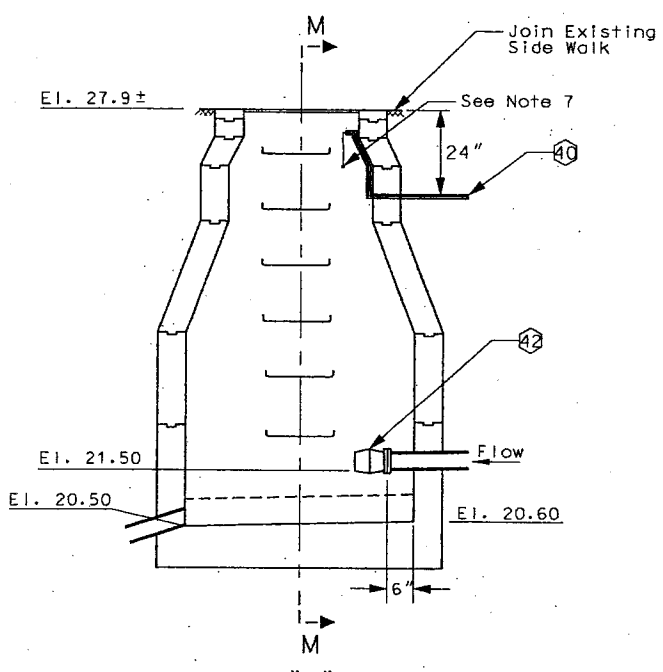

DETAIL "M" (SH. 3)
MODIFIED PRECAST CONCRETE SEWER MANHOLE 200
NOT TO SCALE

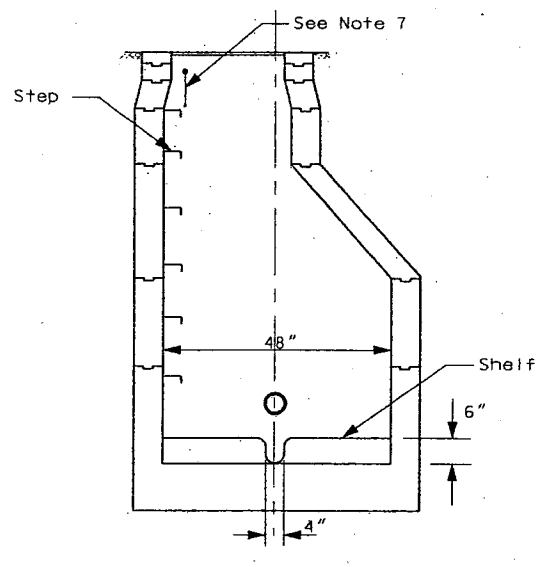

SECTION M-M
NOT TO SCALE

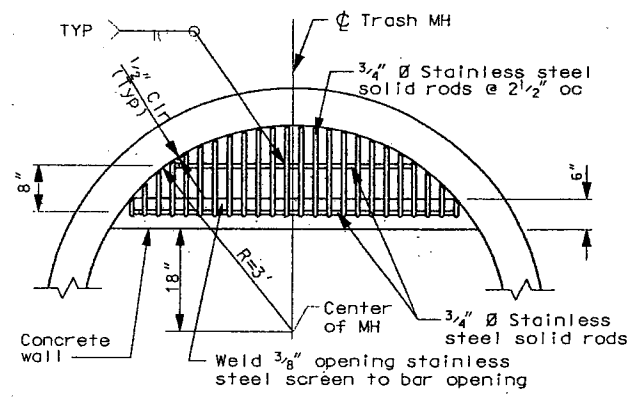

PLAN VIEW

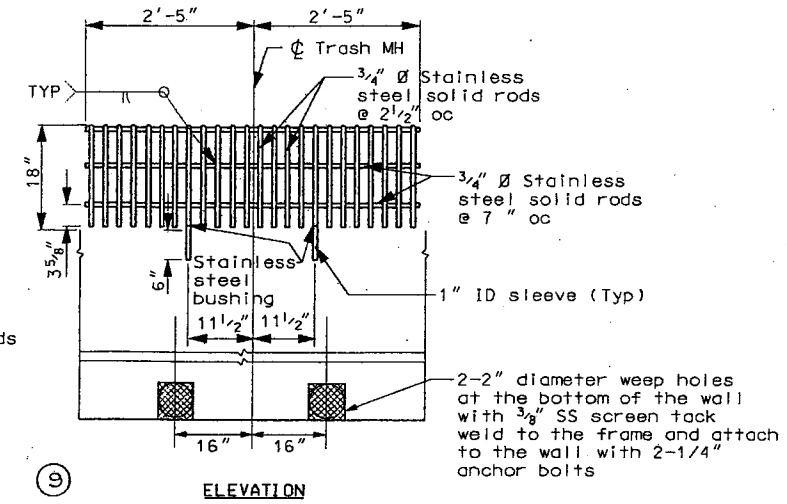

ELEVATION

9

DETAIL "E" (SH. 3&4)
STAINLESS STEEL BAR SCREEN
NOT TO SCALE

DATE	MK	DESCRIPTION

REVISIONS

REGISTERED PROFESSIONAL ENGINEER ABED MOHSEN NO. C 59117 EXP. 6-30-07 CIVIL STATE OF CALIFORNIA

Abed Mohsen 9-11-03
PROJECT ENGINEER DATE

COUNTY OF LOS ANGELES DEPARTMENT OF PUBLIC WORKS

REGIONAL PROJECT NO. 1105
REDONDO BEACH AREA
LOW FLOW DIVERSION
AT HERONDO ST D/S OF N. FRANCISCA AV.

MISCELLANEOUS DETAILS

PINFCC0000839 | JOB:X5009454 | DWG364-1105-D12.6 | SHEET 6 OF 9

TS-DF 5/99

DRAFTER N. STEVENSON | DESIGNER N. STEVENSON | CHECKER A. MOHSEN | CADD PROJECT FILE NAME FCC0000839-SHEET6 | REVIEWED | DATE 9/11/03

DATE: 8/04/07 TIME: 07:19:15 FILE: SFT6.DWG

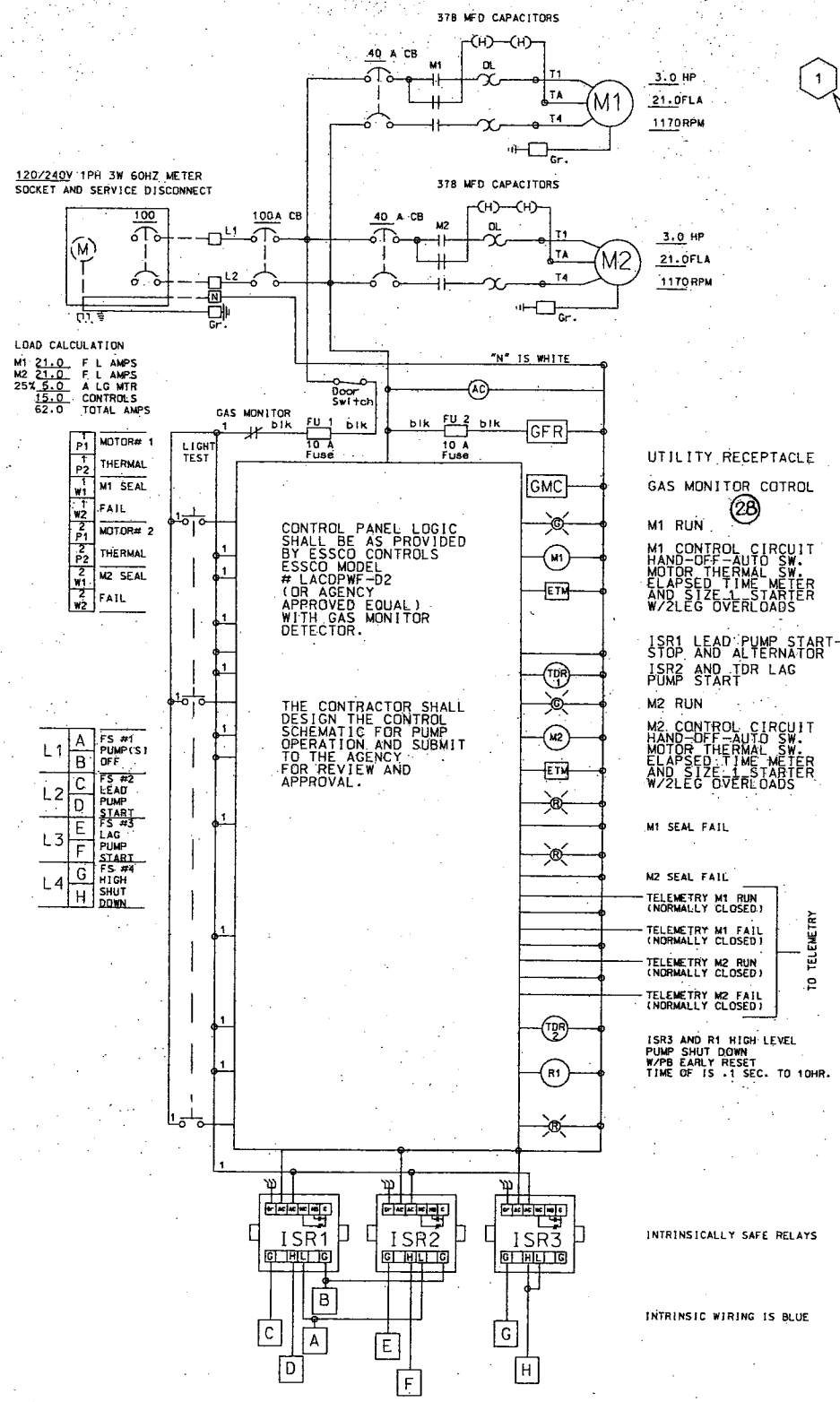

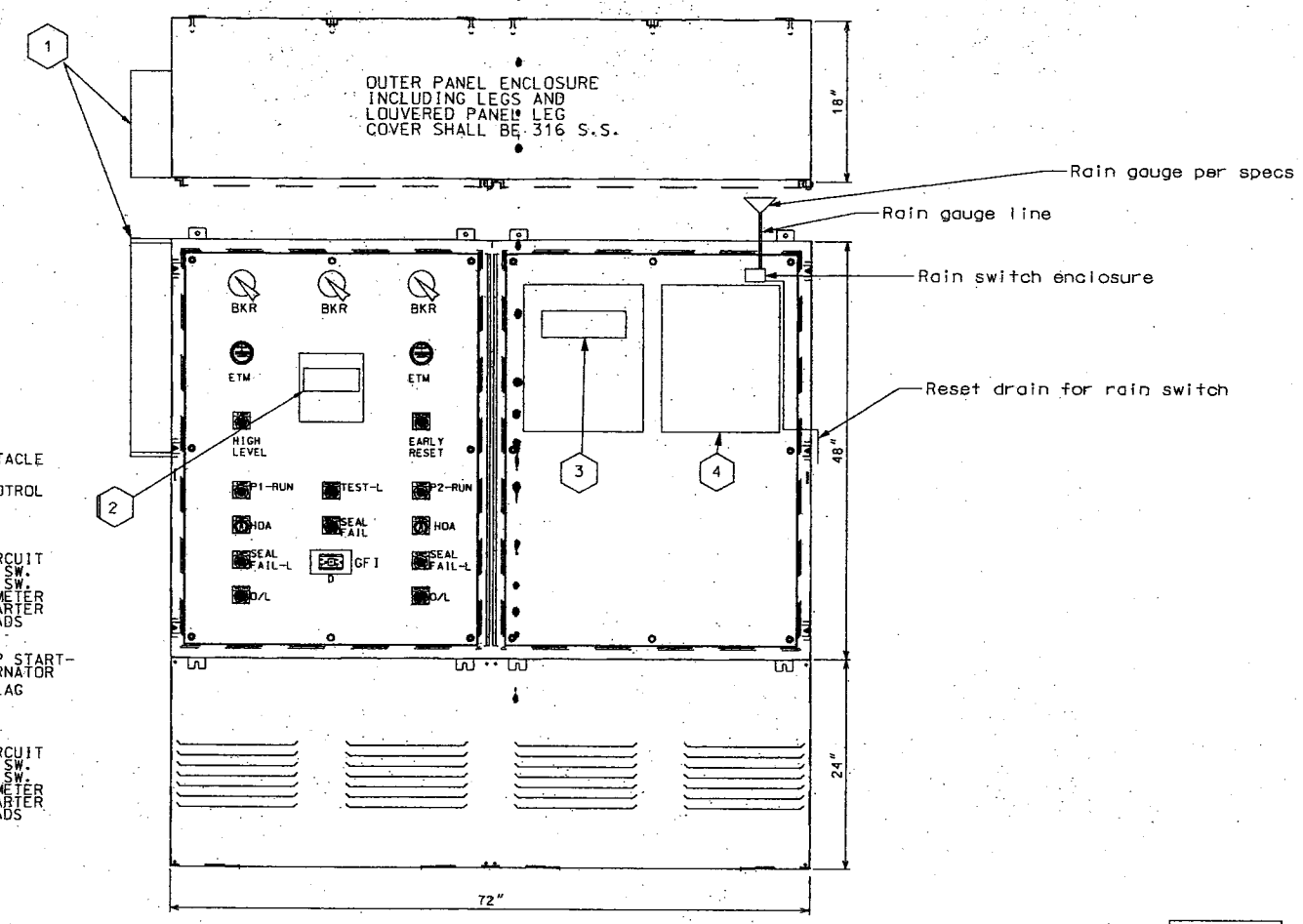

CONTROL PANEL (27)

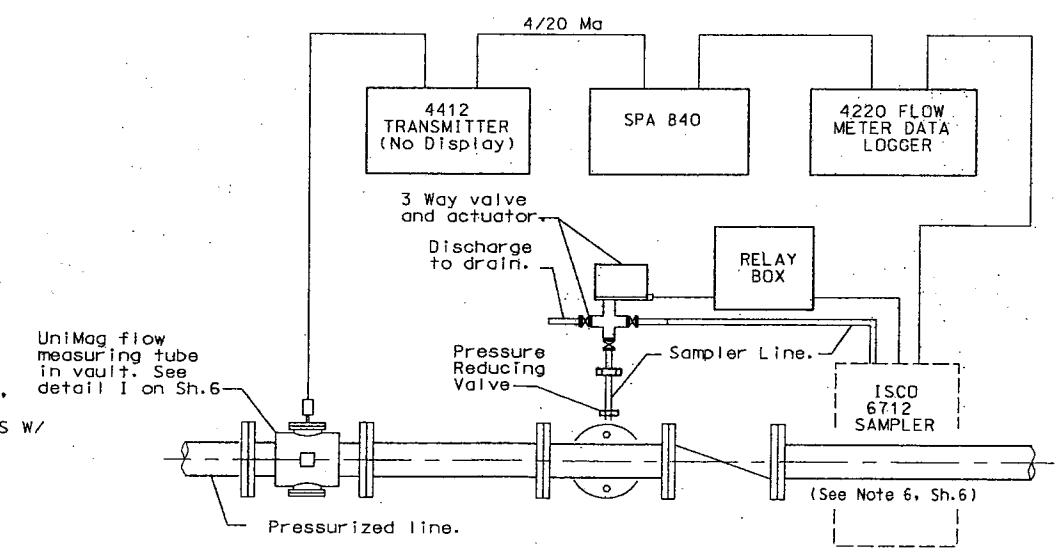

FLOW METER SCHEMATIC (Sh. 6) (15)

NOTES:

1. ALL ELECTICAL WIRING AND EQUIPMENT INSTALLED IN THE "PUMP WELL" SECTION MUST COMPLY W/ ARTICLE 22 OF THE ELECTRICAL SAFETY ORDERS FOR CLASS 1, DIVISION 1, HAZARDOUS LOCATION PROVISIONS OF THE "NATIONAL ELECTRICAL CODE" AND ALL OTHER APPLICABLE LOCAL CODES AND ORDINANCES.
2. ALL ELECTRICAL WIRE SHALL BE "RHW" OR "THW" COPPER CONDUCTOR, OR AGENCY APPROVED EQUAL.
3. ALL PRACTICES AND PROCEDURES, MATERIALS AND PLACEMENT OF MATERIALS SHALL CONFORM IN EVERY RESPECT TO THE STANDARD PLANS AND SPECIFICATIONS
4. PUMP CONTROL PANEL: ESSCO STYLE 'D', NEMA 3R, U.L. LISTED (OR AGENCY APPROVED EQUAL), VANDAL PROOF, DOUBLE DOOR, FACTORY WIRED AND TESTED: PRESET ELECTRICAL CONTROL PANEL: INDICADING LIGHTS AS REQD., RELAYS, HOA: COMBINATION STARTERS W/ QUICK-TRIP HEATERS: PUMP ALTERNATORS: INTRINSICALLY SAFE FLOAT SWITCH CONTROL SYSTEM, WITH METER SOCKET AND MAIN DISCONNECT AND GAS DITECTOR
5. MAGNETIC FLOW METER SYSTEM SHALL CONSIST OF AN ISCO 4" UNIMAG FLOW TUBE, ISCO 4220 FLOW METER, AND ISCO UNIPULSE TRANSMITTER OR AGENCY APPROVED EQUALS.

NOTE
ALL FIELD WIRING TO TERMINALS 1 THROUGH 8 MUST BE ISOLATED FROM ALL OTHER HIGH VOLTAGE BY AT LEAST EIGHT INCHES.

GAS MONITOR — TM GAS DET
AC — AC PWR ON
TO TELEMETRY

1. 100 AMP - 7 TERMINAL - TYPE 304 STAINLESS STEEL METER BOX. 25"x12"x4.625" WITH A LEXAN WINDOW
2. GAS MONITOR DETECTOR MODEL: POLYTRON # IR 6809420 OR AGENCY APPROVED EQUAL
3. ISCO 4220 FLOW METER AND ISCO UNIPULSE TRANSMITTER OR AGENCY APPROVED EQUALS
4. TELEMETRY UNIT

DATE	MK	DESCRIPTION

REVISIONS

REGISTERED PROFESSIONAL ENGINEER — ABED MOHSEN — NO. C59117 — EXP. 6/30/07 — CIVIL — STATE OF CALIFORNIA

Abed Mohsen 9-11-03
PROJECT ENGINEER DATE

COUNTY OF LOS ANGELES DEPARTMENT OF PUBLIC WORKS

REGIONAL PROJECT NO. 1105
REDONDO BEACH AREA

LOW FLOW DIVERSION
AT HERONDO ST D/S OF N. FRANCISCA AV
PUMP CONTROL SCHEMATIC
AND PANEL ENCLOSURE DETAIL

PIN FCC0000839 | JOB X5009454 | DWG364-1105-D12.7 | SHEET 7 OF 9

DRAFTER ESSCO | DESIGNER ESSCO | CHECKER M. TUAN | CADD PROJECT FILE NAME FCC0000879-SHEET6 | REVIEWED | DATE 9/11/03

DATE: 9DATES TIME: 9TIMES FILE: 9FILES

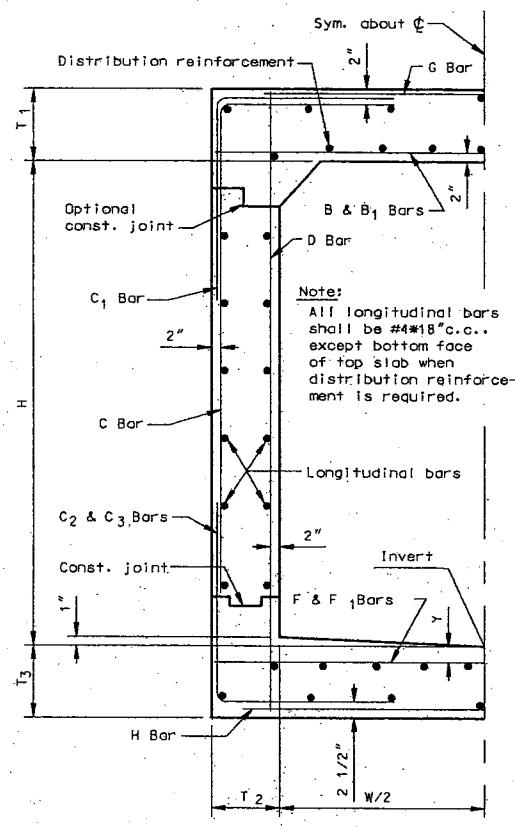

TYPICAL RC BOX SECTION

NOT TO SCALE

STRUCTURAL NOTES

1. DIMENSIONS FROM FACE OF CONCRETE TO STEEL ARE TO CENTER OF BAR, UNLESS OTHERWISE SHOWN.
2. CONCRETE DIMENSIONS SHALL BE MEASURED HORIZONTALLY OR VERTICALLY ON THE PROFILE, AND PARALLEL TO OR AT RIGHT ANGLES (OR RADIALLY) TO CENTERLINE OF CONDUIT ON THE PLAN EXCEPT AS OTHERWISE SHOWN.
3. ALL BAR BENDS AND HOOKS SHALL CONFORM TO THE AMERICAN CONCRETE INSTITUTE'S "BUILDING CODE REQUIREMENT FOR REINFORCED CONCRETE", LATEST EDITION, SECTION 7.2.
4. TRANSVERSE CONSTRUCTION JOINTS SHALL NOT BE PLACED WITHIN 30 INCHES OF MANHOLE OR JUNCTION STRUCTURE OPENINGS.
5. TRANSVERSE CONSTRUCTION JOINTS IN WALLS AND SLABS SHALL BE IN THE SAME PLANE. NO STAGGERING OF JOINTS WILL BE PERMITTED. TRANSVERSE CONSTRUCTION JOINTS SHALL BE NORMAL OR RADIAL TO THE CENTERLINE OF CONSTRUCTION.
6. THE TRANSVERSE REINFORCING BARS SHALL TERMINATE ONE AND ONE-HALF INCHES FROM THE CONCRETE SURFACES UNLESS OTHERWISE SHOWN ON THE STRUCTURAL DETAILS.
7. EXPOSED SURFACES OF CONCRETE MEMBERS SHALL BE ROUNDED OR BEVELED.
8. NO SPLICES IN TRANSVERSE BARS REINFORCEMENT WILL BE PERMITTED OTHER THAN SHOWN ON THE DRAWING WITHOUT APPROVAL OF THE ENGINEER. NO MORE THAN TWO SPLICES WILL BE PERMITTED IN ANY LONGITUDINAL BAR BETWEEN TRANSVERSE JOINTS. SPLICES SHALL BE STAGGERED.
9. LONGITUDINAL BARS SHALL BE LAPPED 20 BAR DIAMETERS AT SPLICES. TRANSVERSE BARS SHALL BE LAPPED 30 BAR DIAMETERS AT SPLICES.
10. LONGITUDINAL BARS SHALL BE CONTINUOUS AND EXTEND THROUGH ALL CONSTRUCTION JOINTS.
11. UNLESS OTHERWISE SHOWN ON THE DRAWINGS, TRANSVERSE CONSTRUCTION JOINTS (IN BOTH SLABS AND WALLS), SHALL BE PLACED AT THE END OF EACH POUR, BUT THE SPACING THEREOF SHALL NOT EXCEED 50 FEET NOR BE LESS THAN 10 FEET.
12. UNLESS OTHERWISE SHOWN ON THE DETAILS, IN CURVED SECTIONS TRANSVERSE BARS SHALL BE PLACED RADIALLY. THE SPACING OF STRAIGHT TRANSVERSE BARS IN TOP AND BOTTOM SLABS SHALL BE MEASURED AT THE CENTERLINE OF CONSTRUCTION. THE SPACING OF STRAIGHT BARS AND L-BARS IN WALLS SHALL BE MEASURED BETWEEN THE VERTICAL LEGS OF BARS.
13. AT THE BEGINNING AND ENDING OF ALL POURS, A CURTAIN OF REINFORCEMENT COMPOSED OF B, C, C2, D, F, G, AND H BARS SHALL BE PLACED THREE INCHES FROM THE TRANSVERSE CONSTRUCTION JOINT.
14. D BARS MAY BE SPLICED 20 BAR DIAMETERS AT THE LOWER LONGITUDINAL CONSTRUCTION JOINT, AT CONTRACTOR'S OPTION.
15. IN ALL SECTIONS LAP C AND C2 BARS. THE VERTICAL LENGTH OF C AND C2 HAS BEEN CALCULATED FOR A FOUR-INCH STARTER WALL. IF THE HEIGHT OF THE STARTER WALL IS VARIED, THE VERTICAL LENGTH OF THE C AND C2 BARS SHALL BE VARIED CORRESPONDINGLY SO AS TO MAINTAIN A 30 DIAMETER LAP BETWEEN THE TWO BARS. THE LAPS SHALL BE BASED ON THE SMALLER BARS.
16. CONCRETE QUANTITIES ARE BASED ON A SIX-BY-SIX INCH FILLET AND STEEL QUANTITIES DO NOT INCLUDE ANY OPTIONAL SPLICES.
17. IF WALL THICKNESS IS SIX INCHES, PLACE REINFORCEMENT AT THE CENTERLINE OF THE WALL.

BOX SECTION		1	2		
Design Cover		12'-0"	12'-0"		
Width	W	9'-2"	12'-0"		
Height	H	11'-0"	11'-0"		
Top Slab Thickness	T1	10½"	13¼"		
Side Wall Thickness	T2	8½"	9½"		
Bottom Slab Thickness	T3	12"	14¾"		
Concrete Cover (3" Min.)	Y	3"	3"		
B Bars	Bar No. & Spacing	# 9 @ 17"	# 9 @ 12"		
	Length	10'- 4"	13'- 4"		
B1 Bars	Bar No. & Spacing	# 5 @ 17"	# 6 @ 12"		
	Length	5' - 10"	7'- 8½"		
C Bars	Bar No. & Spacing	# 4 @ 12"	# 4 @ 10"		
	Hor. Length	4'-½"	4'- 10"		
	Vert. Length	11' - 3½"	11'- 6½"		
C1 Bars	Bar No. & Spacing	# 6 @ 12"	# 5 @ 10"		
	Hor. Length	2' 0"	2'- 4"		
	Vert. Length	2' 8"	2'- 11½"		
C2 Bars	Bar No. & Spacing	# 4 @ 12"	# 4 @ 10"		
	Hor. Length	4'-½"	6'-1½"		
	Vert. Length	2' - 5"	2' - 8"		
C3 Bars	Bar No. & Spacing	# 6 @ 12"	# 5 @ 10"		
	Hor. Length	2'- 2"	2'-4½"		
	Vert. Length	2'- 3½"	2' - 7"		
D Bars	Bar No. & Spacing	# 4 @ 11"	# 4 @ 14"		
	Length	12'- 7½"	13' - 1"		
F Bars	Bar No. & Spacing	# 9 @ 15"	# 8 @ 8"		
	Length	10'- 4"	13' - 4"		
F1 Bars	Bar No. & Spacing	# 5 @ 15"	# 4 @ 8"		
	Length	6'- 4½"	7' - 9"		
G Bars	Bar No. & Spacing	# 4 @ 12"	# 4 @ 10"		
	Length	4'- 7½"	6' - 0"		
H Bars	Bar No. & Spacing	# 4 @ 12"	# 4 @ 10"		
	Length	4'- 7½"	6' - 0"		
NUMBER OF LONGITUDINAL REINFORCEMENT # 4 BARS					
Top Slab (includes distribution reinforcement)		16	20		
Bottom Slab		16	22		
Side Walls		28	28		
TOTAL		60	70		
QUANTITIES					
Concrete Cu. Yds./Lin. Ft.		1.34	1.85		
Steel Lbs./Lin. Ft.		183.0	250.1		

STRUCTURAL DESIGN CRITERIA

L.A.C.F.C.D. STRUCTURAL DESIGN MANUAL
DATED APRIL 1982

LIVE LOAD

HS 20-44 unless otherwise noted

DEAD LOAD

Earth load per Marston's formula: w= 130 pcf
Ku=Ku'=0.150
Bd=Outside width of box plus 3 feet
Side earth 42 psf per foot of depth
Internal water pressure: 62.4 psf per foot of depth
Weight of concrete: 150 pcf

ALLOWABLE STRESSES

f'c=4000 psi at 28 days
fc =1800 psi
fs =24,000 psi
n =8
Shear and bond stresses per A.C.I. 318-63

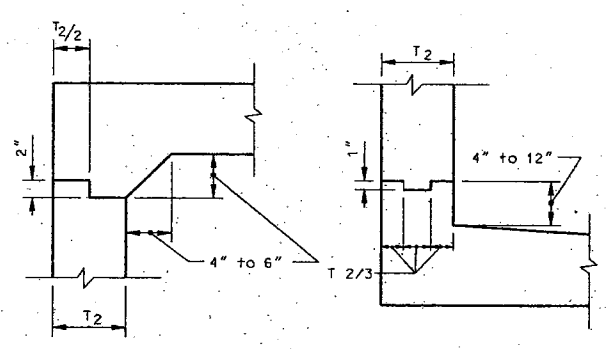

TOP OF WALL

BASE OF WALL

LONGITUDINAL JOINT

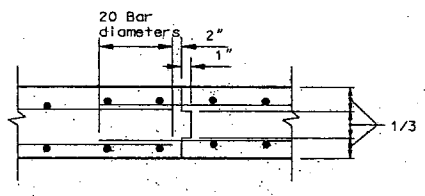

TRANSVERSE JOINT

CONSTRUCTION JOINT DETAILS

NOT TO SCALE

R C BOX LOCATION SCHEDULE					
Box Sect.	Station From	Station To	Box Sect.	Station From	Station To
1	18+08.22				
2	18+23.22	18+25.22			
1	18+40.22				

DATE	MK	DESCRIPTION
		REVISIONS

REGISTERED PROFESSIONAL ENGINEER ABED MOHSEN C59117 6-30-07 CIVIL STATE OF CALIFORNIA

Abed Mohsen 9-11-03
PROJECT ENGINEER DATE

COUNTY OF LOS ANGELES DEPARTMENT OF PUBLIC WORKS

REGIONAL PROJECT NO. 1105
REDONDO BEACH AREA
LOW FLOW DIVERSION
AT HERONDO ST D/S OF N. FRANCISCA AV
SINGLE RC BOX
STRUCTURAL SCHEDULE, NOTES AND DETAILS

PIN FCC0000839 | JOB. X5009454 | DWG364-1105-D12.8 | SHEET 8 OF 9

PS-DF 3/99

DRAFTER N. STEVENSON | DESIGNER N. STEVENSON | CHECKER A. MOHSEN | CADD PROJECT FILE NAME FCC0000839SH7 | REVIEWED BY | DATE

PROJECT 1105 - LOW FLOW DIVERSION AT HERONDO ST
STATION 16+45
OFFSET 38 FT. N/O HERONDO STREET ℄
ELEVATION ±28 FT.
DATE DRILLED 06/16/03

BORING NO. B-1
LOGGED BY: B.D.S.

Depth (ft)	Graphic log		Dry Unit Wt. pcf	Moisture Content %	% Passing No. 4	% Passing No. 200
0		4" AC w/ 4" CMB				
		*SM, SILTY SAND dense, moist, reddish brown				
5		SP-SM, POORLY GRADED SAND w/ SILT very dense, moist, dark brown	105.5	6.5		
		@ 7', dark grey with some fine gravel content				
10		@ 10', dense, organic material encountered w/ strong odor	109.4	7.5	94.8	6.7
		@ 12', some fine gravel and brick				
15		@ 15', increase to very dense	115.9	9.0		
20		@ 20', decrease to dense	111.8	6.1		
					93.5	5.4
25		@ 24', groundwater encountered				
		*SW, WELL GRADED SAND very dense, very moist, light grey	130.5	10.0		
30						
35						

End of Boring @ 31 ft.
Groundwater encountered @ 24 ft.
No bedrock encountered

NOTES

1. Location of test boring was determined from Department Drawings for Project 1105 - Low Flow Diversion, Sheet 3 of 9, undated.
2. Group symbols and soil descriptions are based on the Unified Soil Classified System, (Standard Plan No. 3093-1) Laboratory classification criteria were used, unless otherwise indicated.
3. * Denotes soil classified by field identification procedures.
4. Borings were drilled with a Hollow Stem Auger rig using a 6.5-inch O.D. stem.
5. Groundwater was encountered during exploration at 24 ft.
6. Caving conditions could not be determined due to the type of drilling equipment used.
7. Soil conditions in exploratory boring are applicable at a specified location using above drilling equipment on the date drilled. No warranty is made as to varying soil conditions beyond boring location during excavation operations.

DRAFTER B. SMITH | DESIGNER N. STEVENSON | CHECKER M. STEUER | CADD PROJECT FILE NAME FC0000839/GMED/BORING LOGS | REVIEWED BY | DATE 9/18/03

DATE	MK	DESCRIPTION
		REVISIONS

REGISTERED PROFESSIONAL ENGINEER GEOTECHNICAL MARK A. STEUER NO. GE 2563 EXP. 6/30/07 STATE OF CALIFORNIA
PROJECT ENGINEER DATE

COUNTY OF LOS ANGELES DEPARTMENT OF PUBLIC WORKS

REGIONAL PROJECT NO 1105
REDONDO BEACH AREA
LOW FLOW DIVERSION
AT HERONDO ST D/S OF N. FRANCISCA AV

LOG OF BORING

JOB X5009454 | DWG 364-1105-D12.9 | SHEET 9 OF 9

PS-OF 5/99