COUNTY OF LOS ANGELES
DEPARTMENT OF PUBLIC WORKS

PROJECT NO. 513

PERSHING DRIVE
OCEAN OUTLET MODIFICATION

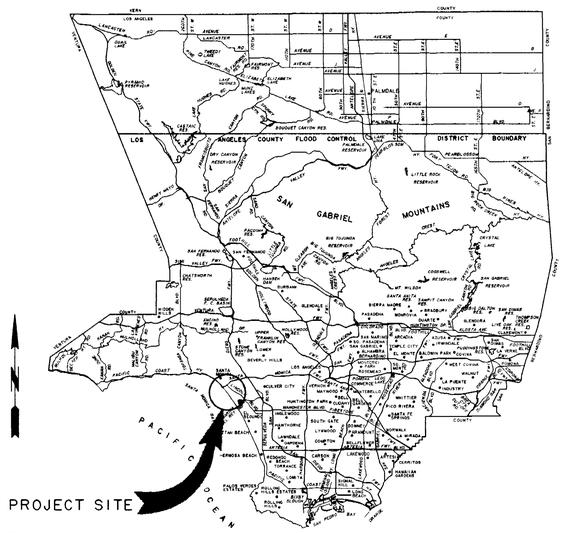

T.G. 702(A-3) (NEW)
49(A-3)(B-3) (OLD)

LOCATION MAP

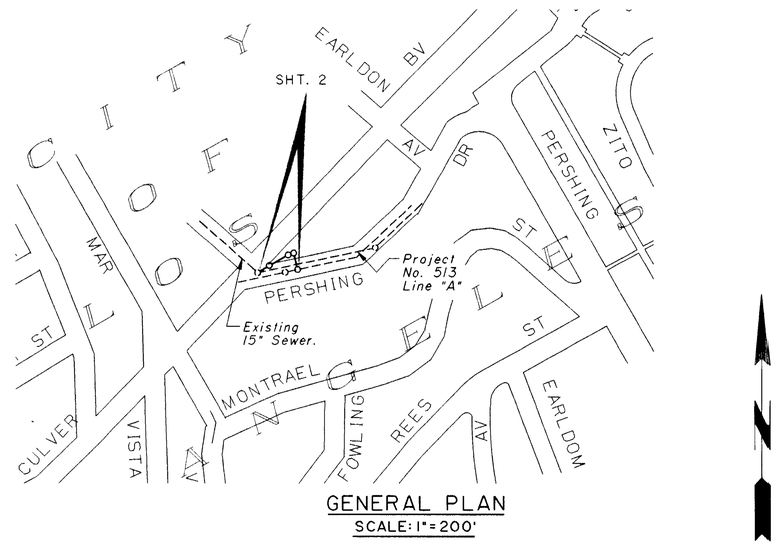

GENERAL PLAN
SCALE: 1" = 200'

INDEX TO PROJECT DRAWINGS.

SHEET NO.	DESCRIPTION
1.	TITLE SHEET.
2.	PLAN AND PROFILE STATION 1+00.00 TO 1+63.21 CONCRETE SILL AND PIPE CONNECTION DETAILS.
3.	COLLECTION CHAMBER, SUMP PUMP AND SLUICE GATE DETAILS.
4.	LAYOUT AND ROTO FLOAT INSTALLATION DETAILS. LOG OF BORING.
5.	SUMP PUMP CONTROL PANEL AND SCHEMATICS.

REFERENCES

SURVEY PWLB 0516 PGS 88, 168-166, & 197
DRAWING NO. 364-1105-D4.3,7&9.

GENERAL NOTES

1. NUMBERS IN CIRCLES INDICATE ITEMS UNDER WHICH PAYMENT WILL BE MADE.
2. NUMBERS AND LETTERS IN BRACKETS, SUCH AS [3] OR [A-3], IDENTIFY STRUCTURES FOR CONTRACT ADMINISTRATION PURPOSES.
3. ELEVATIONS SHOWN ARE IN FEET ABOVE THE U.S.G.S. MEAN SEA LEVEL DATUM OF 1929, BASED ON L.A. COUNTY ENGINEER 1976 ADJUSTMENT.
4. STATIONS SHOWN ON THE DRAWINGS ARE ALONG CENTER LINE OF CONDUIT OR ON A LINE NORMAL TO CENTER LINE OF CONDUIT.
5. ALL PIPE IN OPEN TRENCH SHALL BE BEDDED ACCORDING TO STANDARD PLAN NO. 3080, CASE III, EXCEPT BELL AND SPIGOT PIPE WHICH SHALL BE CASE II BEDDING, UNLESS OTHERWISE SHOWN. "W" VALUES SHALL BE AS SPECIFIED ON STANDARD PLAN NO. 3080 FOR CASE III BEDDING, NOTES (A), (B), AND (C). IF THE "W" VALUE AT THE TOP OF THE PIPE IS EXCEEDED, THE BEDDING SHALL BE MODIFIED, AND/OR PIPE OF ADDITIONAL STRENGTH SHALL BE PROVIDED. THE PROPOSED MODIFICATION SHALL BE APPROVED BY THE DEPARTMENT.
6. ALL EXISTING UTILITIES SHOWN ON THE DRAWINGS ARE THE PROPERTY OF (APPLICABLE AGENCY), UNLESS OTHERWISE NOTED.
7. EXISTING UTILITIES SHALL BE MAINTAINED IN PLACE BY THE CONTRACTOR, UNLESS OTHERWISE NOTED, AND ALL UTILITIES CROSSING THE TRENCH SHALL BE TEMPORARILY SUPPORTED TO THE SATISFACTION OF THE OWNER.
8. THE CONTRACTOR SHALL MAKE EXPLORATORY EXCAVATIONS TO DETERMINE THE DEPTH AND LOCATION OF EXISTING UTILITIES WHERE SO INDICATED BY THE SYMBOL "Δ".
9. PRESSURE MANHOLES SHALL BE CONSTRUCTED PER COUNTY OF LOS ANGELES SANITATION DISTRICT STANDARD DRAWING S-a-206. MANHOLE SHAFT SHALL BE PER APWA-AGC STANDARD PLAN NO. 329-1 FOR SPECIAL PRESSURE MANHOLES.
10. ALL RESURFACING, CURBS, GUTTERS, SIDEWALKS, DRIVEWAYS, AND OTHER EXISTING IMPROVEMENTS TO BE RECONSTRUCTED SHALL BE CONSTRUCTED AT THE SAME ELEVATION AND LOCATION AS THE EXISTING IMPROVEMENTS, UNLESS OTHERWISE NOTED.
11. STREET RESURFACING SCHEDULE IS SHOWN ON THIS SHEET.
12. MANHOLES SHALL USE THE APWA-AGC STANDARD PLANS FOR PUBLIC WORKS CONSTRUCTION 630-1 FOR THE "FRAME AND COVER" AND 635-1 FOR THE "STANDARD DROP STEP".
13. SPECIAL MANHOLES SHALL BE CONSTRUCTED PER COUNTY SANITATION DISTRICT OF LOS ANGELES STANDARD DRAWING S-a-206 AND THE MANHOLE SHAFT, FRAME AND COVER PER APWA-AGC STANDARD PLAN NO. 329-1 AND 633-3.
14. EXISTING TREES SHALL BE REMOVED ONLY IF SO DESIGNATED. THOSE TREES NOT INTERFERING WITH CONSTRUCTION SHALL BE PROTECTED IN PLACE.
15. THE WORK SHOWN ON THESE DRAWINGS REQUIRES THE PRIME CONTRACTOR TO HAVE A VALID CLASS A OR C42 LICENSE ISSUED BY THE STATE OF CALIFORNIA.
16. ALL FIELD BOOK REFERENCES ARE TO LOS ANGELES COUNTY DEPARTMENT OF PUBLIC WORKS FIELD BOOKS, UNLESS OTHERWISE NOTED.
17. FIELD DENSITY AFTER ROLLING OF ALL ASPHALTIC CONCRETE PLACED ON THIS PROJECT SHALL BE A MINIMUM OF 95 PERCENT RELATIVE COMPACTION, PER SUBSECTION 302-5.6.2 OF THE STANDARD SPECIFICATIONS.
18. MANHOLE SHAFT SHALL USE APWA-AGC STANDARD PLAN NO. 635-2 FOR THE "STANDARD DROP STEP".

INDEX TO STANDARD DRAWINGS

LACDPW

STD. PLAN	TITLE
2025-1	SADDLES FOR HOUSE LATERALS.
3080-1	PIPE BEDDING IN TRENCHES
3090-0	CRITERIA FOR THE DESIGN OF SHORING FOR EXCAVATIONS
3091-0	SAMPLE SHEET FOR USE AS A GUIDE IN PREPARING CALCULATIONS FOR SHORING OF EXCAVATIONS
3093-0	UNIFIED SOIL CLASSIFICATION SYSTEM
6002-0	PORTABLE SECURITY FENCE FOR OPEN TRENCHES
6008-0	MINIMUM PUBLIC SAFETY REQUIREMENT FOR OPEN EXCAVATIONS

APWA-AGC

STD. PLAN	TITLE
220-2	CHIMMEYS
320-1	MANHOLE PIPE TO PIPE MAIN LINE.
327-1	MANHOLE FOR EXISTING RCB.
329-1	PRESSURE MANHOLE SHAFT AND PRESSURE PLATE DETAIL 36" WITHOUT REDUCER.
335-1	PIPE CONNECTION TO EXISTING STORM DRAINS.
420-1	CONTROLLER CABINET DETAILS
424-1	CABINET FOUNDATION-G
630-2	24" MANHOLE FRAME AND COVER
633-3	36" MANHOLE FRAME AND COVER
635-2	STEEL STEP

INDEX TO STANDARD DRAWINGS CONTD.

COUNTY SANITATION DISTRICT OF LA

DRAWING NO	TITLE
S-a-206	STANDARD MANHOLE, TYPE "E" 60" TO 72" DIA.
IW-101	STANDARD METERING MANHOLE BASE, FOR FLOWS FROM 17 GPM TO 4700 GPM

RESURFACING SCHEDULE

AREA	RESURFACING
PERSHING DRIVE	12" AC ON 6" BASE

UTILITIES

ELECTRIC. . . . . **DEPARTMENT OF WATER AND POWER**
GAS. . . . . SOUTHERN CALIFORNIA GAS COMPANY
WATER. . . . . DEPARTMENT OF WATER AND POWER
STORM DRAIN. . . LA COUNTY DEPARTMENT OF PUBLIC WORKS
SEWER. . . . . LA. COUNTY SANITATION DISTRICT, CITY OF LOS ANGELES

PD042082

STRUCTURAL NOTES

1. DIMENSION FROM FACE OF CONCRETE TO STEEL ARE TO CENTER OF BAR, UNLESS OTHERWISE SHOWN.
2. CONCRETE DIMENSIONS SHALL BE MEASURED HORIZONTALLY OR VERTICALLY ON THE PROFILE, AND PARALLEL TO OR AT RIGHT ANGLES (OR RADIALLY) TO CENTERLINE OF CONDUIT ON THE PLAN EXCEPT AS OTHERWISE SHOWN.
3. ALL BAR BENDS AND HOOKS SHALL CONFORM TO THE LATEST AMERICAN CONCRETE INSTITUTE'S "BUILDING CODE REQUIREMENTS FOR REINFORCED CONCRETE" SECTION 7.1.
4. PLACING OF REINFORCEMENT SHALL CONFORM TO THE LATEST AMERICAN CONCRETE INSTITUTE'S "BUILDING CODE REQUIREMENTS FOR REINFORCED CONCRETE" SECTION 7.3.
5. TRANSVERSE CONSTRUCTION JOINTS SHALL NOT BE PLACED WITHIN 30 INCHES OF MANHOLE OR JUNCTION STRUCTURE OPENING.
6. TRANSVERSE CONSTRUCTION JOINTS IN WALLS AND SLABS SHALL BE IN THE SAME PLANE. NO STAGGERING OF JOINTS WILL BE PERMITTED. TRANSVERSE CONSTRUCTION JOINTS SHALL BE NORMAL OR RADIAL TO THE CENTERLINE OF CONSTRUCTION.
7. THE TRANSVERSE REINFORCING STEEL SHALL TERMINATE ONE AND ONE-HALF INCHES FROM THE CONCRETE SURFACE UNLESS OTHERWISE SHOWN ON THE STRUCTURAL DETAILS.
8. EXPOSED EDGES OF CONCRETE MEMBERS SHALL BE ROUNDED OR BEVELED.
9. NO SPLICES IN THE TRANSVERSE STEEL REINFORCEMENT WILL BE PERMITTED OTHER THAN SHOWN ON THE DRAWINGS WITHOUT APPROVAL OF THE ENGINEER. NO MORE THAN TWO SPLICES WILL BE PERMITTED IN ANY LONGITUDINAL BAR BETWEEN TRANSVERSE JOINTS. SPLICES SHALL BE STAGGERED.
10. LONGITUDINAL STEEL SHALL BE LAPPED 20 BAR DIAMETERS AT SPLICES. TRANSVERSE STEEL SHALL BE LAPPED 30 BAR DIAMETERS AT SPLICES.
11. CONCRETE REMOVAL AND REPLACEMENT SHALL BE DONE AS FOLLOWS:
    - A. A SAWCUT SHALL BE MADE ONE AND ONE-HALF INCHES DEEP AT THE REMOVAL LIMITS. CARE SHALL BE EXERCISED IN SAWING AT THE REMOVAL LIMITS SO AS NOT TO CUT THE REINFORCING STEEL IN THE REMAINING SLAB. THE EXISTING REINFORCING STEEL SHALL BE RETAINED AND EXTENDED INTO THE NEW CONSTRUCTION AS INDICATED ON THE PLANS.
    - B. USING HANDHELD EQUIPMENT, THE CONCRETE SHALL BE CAREFULLY REMOVED FOR THE FULL DEPTH OF THE WALL OR SLAB AND FOR A MINIMUM DISTANCE FROM THE SAWCUT EQUAL TO THE LONGEST EXTENSION OF THE EXISTING BARS TO BE EXTENDED INTO THE NEW CONSTRUCTION. THIS EXTENSION SHALL BE 30 BAR DIAMETERS, UNLESS OTHERWISE STATED OR SHOWN IN PLAN.
    - C. EXISTING REINFORCEMENT SHALL BE CUT TO THE REQUIRED BAR EXTENSION.
    - D. THE REMAINING CONCRETE SHALL BE REMOVED BY ANY SUITABLE METHOD UPON APPROVAL OF THE ENGINEER, WHO SHALL BE THE SOLE JUDGE OF THE USE OF ANY CONCRETE REMOVAL EQUIPMENT. EXPLOSIVES, WRECKING BALL, OR OTHER SIMILAR DEVICE, WHICH ARE LIKELY TO DAMAGE THE CONCRETE TO BE LEFT IN PLACE, SHALL NOT BE USED.

TWO DAYS BEFORE YOU DIG
CALL USA TOLL FREE
1-800-422-4133

APPROVED HARRY W. STONE DIRECTOR OF PUBLIC WORKS
BY _____ DEPUTY DIRECTOR — DATE 3-24-99
RECOMMENDED
BY _____ ASSISTANT DEPUTY DIRECTOR — DATE 3-24-99
SUBMITTED
BY Magdy A. Soliman — DATE 3/18/99

DATE	MK	DESCRIPTION

REVISIONS

REGISTERED PROFESSIONAL ENGINEER — AMBROSE AJAELO — NO. C. 53037 — EXP. 06/30/99 — CIVIL — STATE OF CALIFORNIA
PROJECT ENGINEER — DATE 3/18/99

COUNTY OF LOS ANGELES DEPARTMENT OF PUBLIC WORKS
PROJECT NO. 513
PERSHING DRIVE
OCEAN OUTLET MODIFICATION
TITLE SHEET
JOB W 0005164 | DWG 275-513-D14.1 | SHEET 1 OF 5

FORM.002.TITLESHEET 5/92

DRAFTER A. AJAELO | DESIGNER A. AJAELO | CHECKER M. SOLIMAN | CADD PART NUMBER 960057.1ld2.perst

PROJECT NO. 513

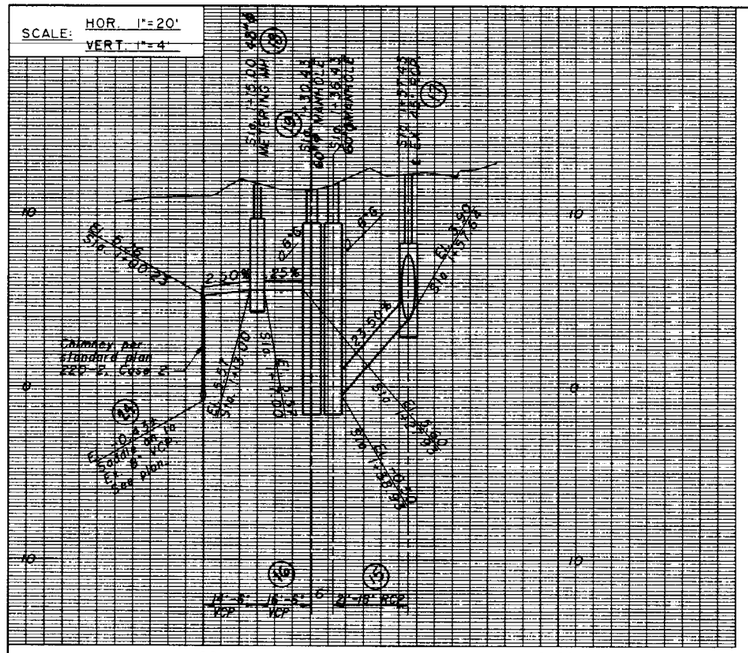

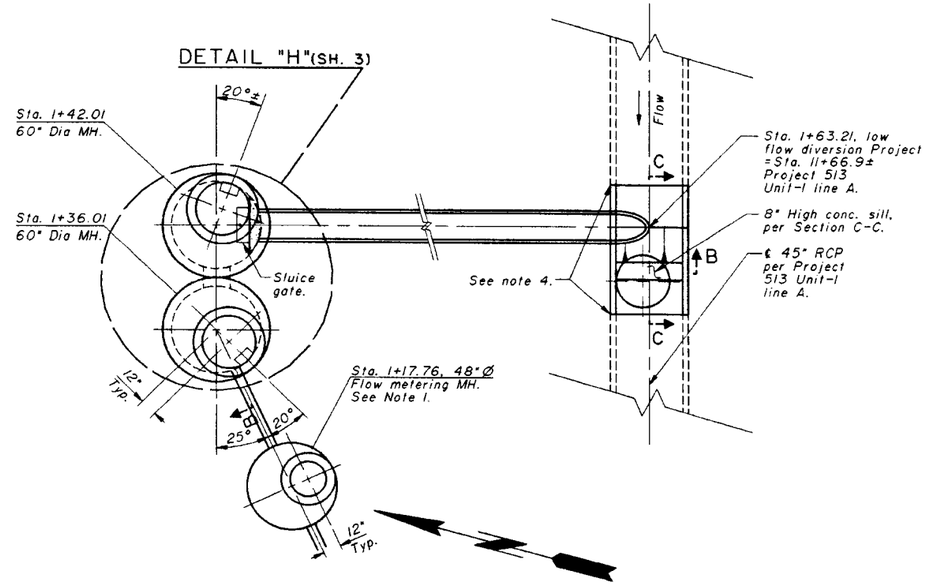

DETAIL "A"(SHOWING CONNECTION BETWEEN RCP & PUMP STATION)
SCALE: 1/4"=1'

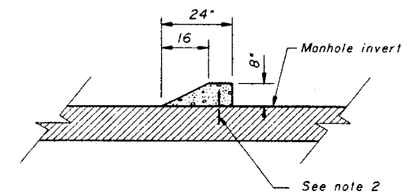

SECTION C-C (21)
NOT TO SCALE

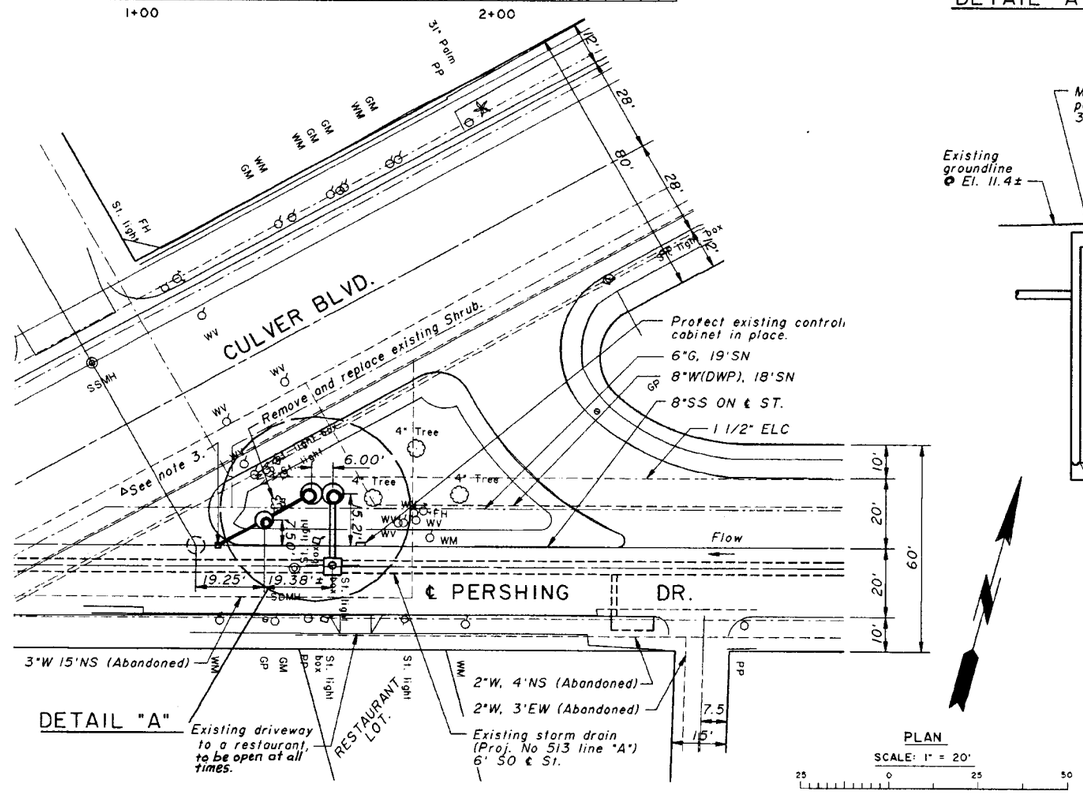

DETAIL "A"

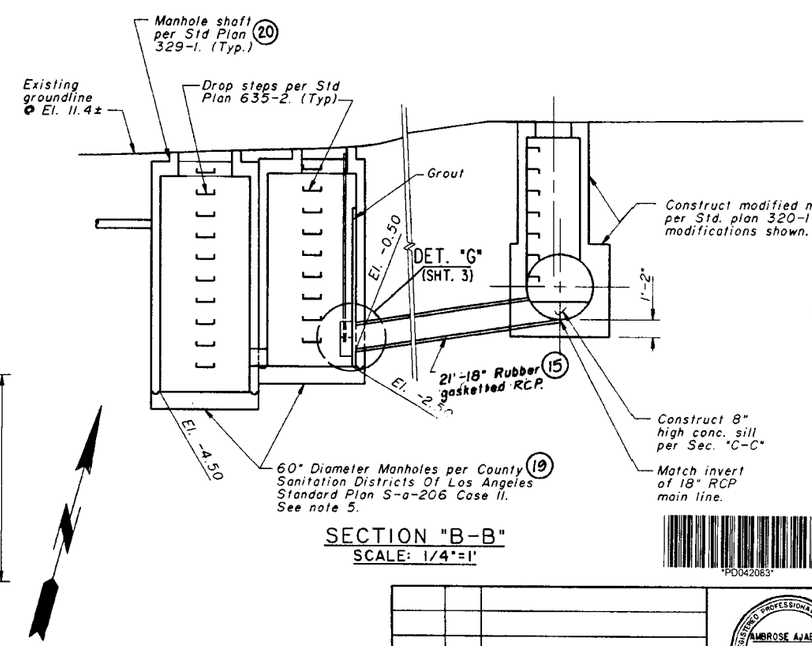

SECTION "B-B"
SCALE: 1/4"=1'

PLAN
SCALE: 1" = 20'

Notes:

1. Construct Manhole base per County sanitation District Standard Drawing IW-101 for flow metering Manhole.
2. Drill 7/8" Dia. hole 5" into existing concrete invert. Place #4 dowels 11" long @ 12" O.C. and fill hole with non-shrink grout. (Master Builder or Dept. approved equal.)
3. Chimney per standard plan 220-2, Case 2. Saddle into existing 8" sewer Per Standard Plan 2025-1
4. Remove interfering portions of Ex. 45" RCP at the nearest joint and construct modified manhole per Standard Dwg. 320-1 with the modification shown on this sheet.
5. Prime coat both manhole interiors with bitumastic concrete penetrant and two coats of undiluted Koppers bitumastic 300m applied at 100 sq. ft. per gallon or Dept. approved equal.

DATE	MK	DESCRIPTION

REVISIONS

REGISTERED PROFESSIONAL ENGINEER AMBROSE AJAELO No. C 53037 Exp. 06/30/99 CIVIL STATE OF CALIFORNIA

PROJECT ENGINEER 03/18/99 DATE

COUNTY OF LOS ANGELES DEPARTMENT OF PUBLIC WORKS

PROJECT NO. 513

PERSHING DRIVE OCEAN OUTLET MODIFICATION

PLAN AND PROFILE STA. 1+00.00 TO 1+63.21 AND PIPE CONNECTION DETAILS

JOB W 0005164 | DWG 275-513-D14.2 | SHEET 2 OF 5

FORM 000 PLANPROFILESHEET 8/92

DRAFTER	DESIGNER	CHECKER	CADD PART NUMBER	REVIEWED BY	DATE
A. AJAELO	A. AJAELO	M. SOLIMAN	960057.11d2.per.sh	[illegible]	3/18/99

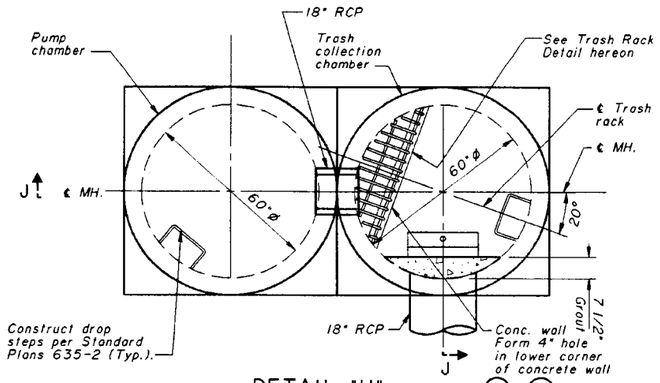

DETAIL "H" (SHT. 2) (21) (23)

(SHOWING PUMP AND TRASH COLLECTION CHAMBERS)

SCALE: 1/2"=1'-0"

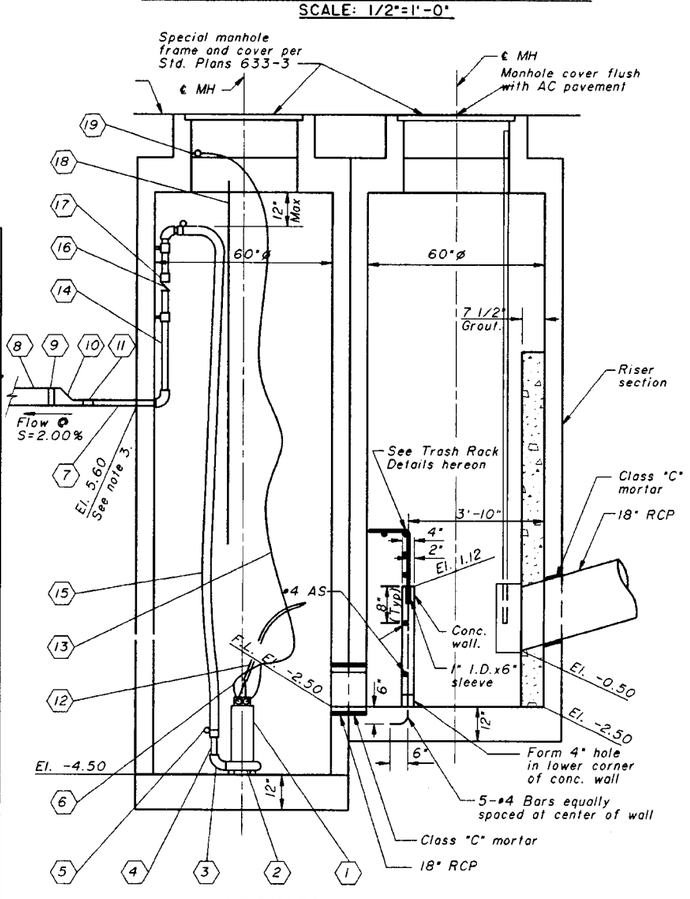

SECTION J-J

NOT TO SCALE

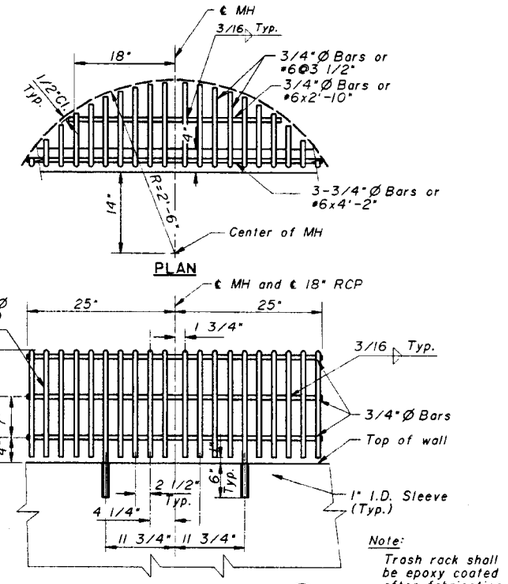

Note:
Trash rack shall be epoxy coated after fabrication

TRASH RACK DETAILS

SCALE: 1"=1'-0"

NO.	PUMPING MATERIAL DESCRIPTION	AMT.
19	1/2" Eye bolt for sump pump harness	1
18	Roto float assembly (See Det. "M" Sheet 4.)	1
17	3"Ø Ductile iron coupling.	1
16	3"Ø Series 100 (70 Durometer)check valve.	1
15	3" Plicord versiflo 125 water discharge hose.	1
14	Rubber backed ductile iron bracket (See note 8)	3
13	1/4" Wire rope, SS. and padlock. (See note 4).	1
12	Electrical cables to pull box. (See Sht. 5)	1
11	Elastomeric bushing.	1
10	3"x6" Dip eccentric increaser.	1
9	6" Ductile iron to VCP adapter.	1
8	6" vitrified clay pipe.	See Sh. 2
7	3" Ductile iron pipe.	3
6	3/8" Wire slings @ end thimbles.	1
5	1 13/16"-2 3/4" Dixon worm gear clamp.	2
4	3" SS. combination nipple.	2
3	3" Ductile iron 90° elbow.	3
2	Pump, 0.20 cfs @ 26ft TDH. See note 7.	1
1	Motor 2HP, 1150rpm. See note 7.	1

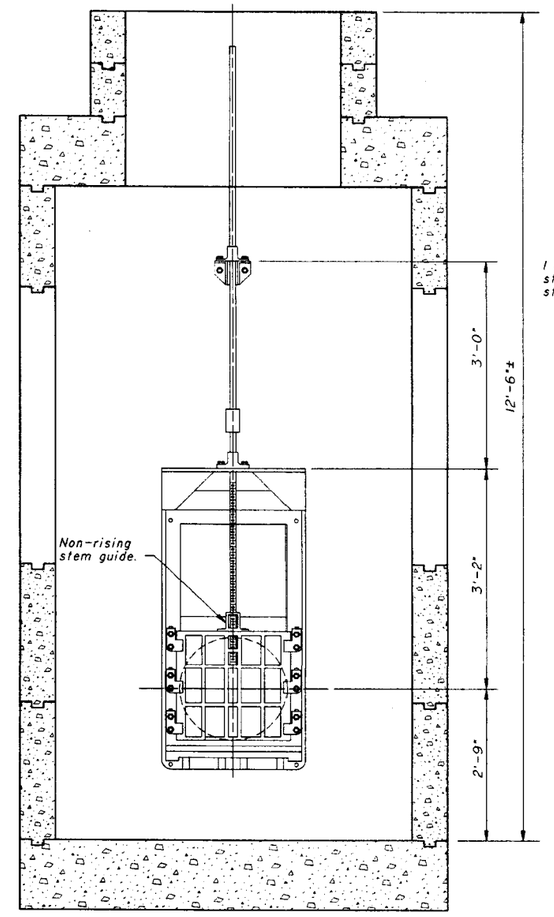

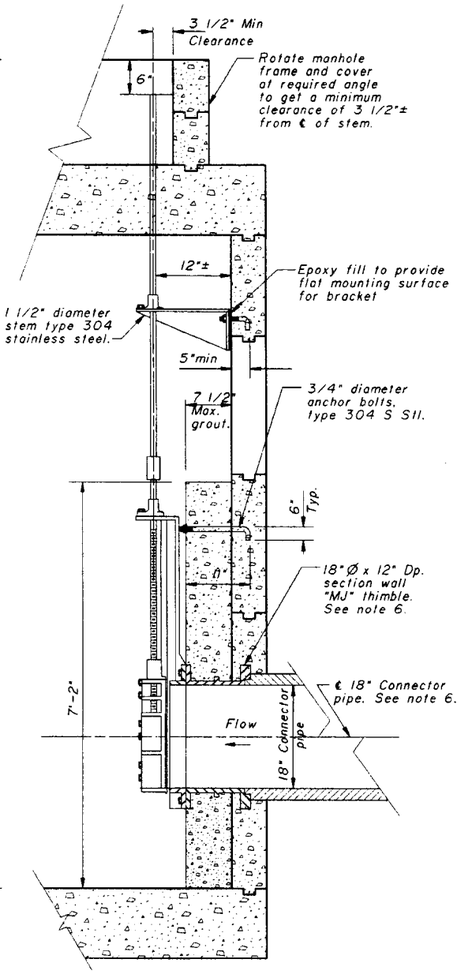

DETAIL "G" (SHEET 2)

18"x18" FLAT BACK SLUICE GATE - 1 REQ'D (SEE NOTE 5) (22)

NOT TO SCALE

Notes:

1. All bolts and straps inside sump shall be stainless steel.
2. Bottom of PVC tube shall be installed 6" above floor of sump.
3. Exit and entrance piping edges thru walls shall be caulked and joints made leak proof.
4. Provide thimble at upper end of wire rope for padlock attachment.
5. Sluice gate shall be Waterman Industrial Model No. SC-3000-ff-NRS-Y, and salt water resistant, or a Department approved equal.
6. Connect mechanical joint to 18"Ø x 30" long cement lined and coated steel pipe. Connect steel pipe in place of CSP to 18" RCP per Standard Plan 335-1 CASE 3.
7. ESSCO pump Model No. 493 or equal.
8. Mount 3" ductile iron pipe to wall with #8X3/4" SS machine screw @ 24" OC.

"PD042084"

DATE	MK	DESCRIPTION

REVISIONS

REGISTERED PROFESSIONAL ENGINEER — AMBROSE AJAELO — C. 53037 — Exp. 06/30/99 — CIVIL — STATE OF CALIFORNIA

PROJECT ENGINEER — DATE 3/18/98

COUNTY OF LOS ANGELES DEPARTMENT OF PUBLIC WORKS

PROJECT NO. 513

PERSHING DRIVE OCEAN OUTLET MODIFICATION

COLLECTION CHAMBER, SUMP PUMP AND SLUICE GATE DETAILS

JOB W 0005164 | DWG 275-513-D14.3 | SHEET 3 OF 5

FORM DOJ PLANSHEET 9-92

DRAFTER A. AJAELO | DESIGNER A. AJAELO | CHECKER M. SOLIMAN | CADD PART NUMBER 960057.fld2.persh | REVIEWED BY Murphy A. Schiavo | DATE 3/18/98

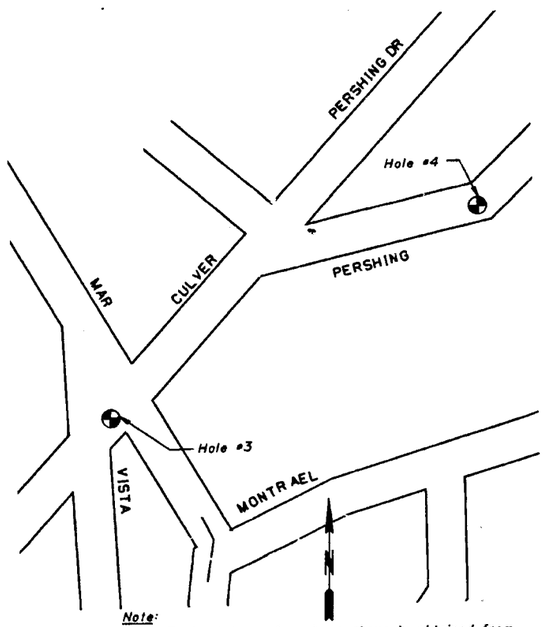

Note:
1. Boring information shown above is obtained from Project, No. 513, Drawing No 275-513-D3.23 and is for reference only.

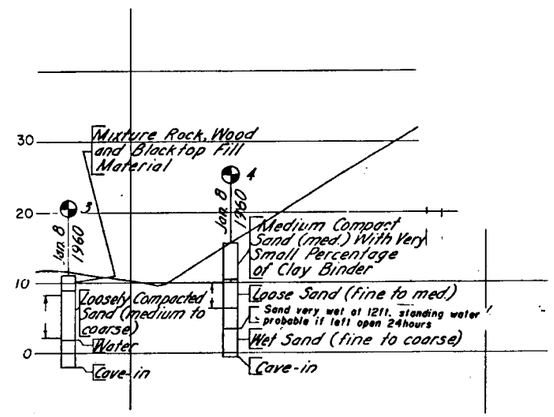

LOG OF BORINGS

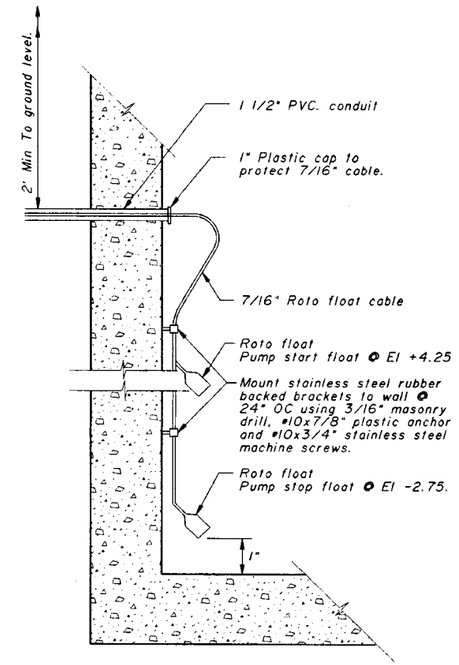

DETAIL "M" (SHEET 3)
(SHOWING ROTOR FLOAT ASSEMBLY INSTALLATION)
NOT TO SCALE

BENCH MARK

BM #74P17-01970 Elev. 10.843

LA CITY '85, CITY DISC STAMPED 26M IN 8" MONUMENT 5' N/O NORTH CURB LINE CULVER BL. 20' W/O WEST CURB LINE CULVER PL.

SURVEY PWFB 0915 PGS 180, 181, & 201-203

Notes:

"PD042085"

DATE	MK	DESCRIPTION

REVISIONS

REGISTERED PROFESSIONAL ENGINEER AMBROSE AJAELO C. 53037 EXP. 06/30/99 CIVIL STATE OF CALIFORNIA

PROJECT ENGINEER 1/19/99 DATE

COUNTY OF LOS ANGELES DEPARTMENT OF PUBLIC WORKS

PROJECT NO. 513

PERSHING DRIVE
OCEAN OUTLET MODIFICATION

ROTO FLOAT INSTALLATION DETAILS.
LOG OF BORING.

JOB W 0005164 | DWG 275-513-D14.4 | SHEET 4 OF 5

FORM 002 PLANSHEET 9/92

DRAFTER	DESIGNER	CHECKER	CADD PART NUMBER	REVIEWED BY	DATE
A. AJAELO	A. AJAELO	M. SOLIMAN	960057.1142.persh		3/10/99

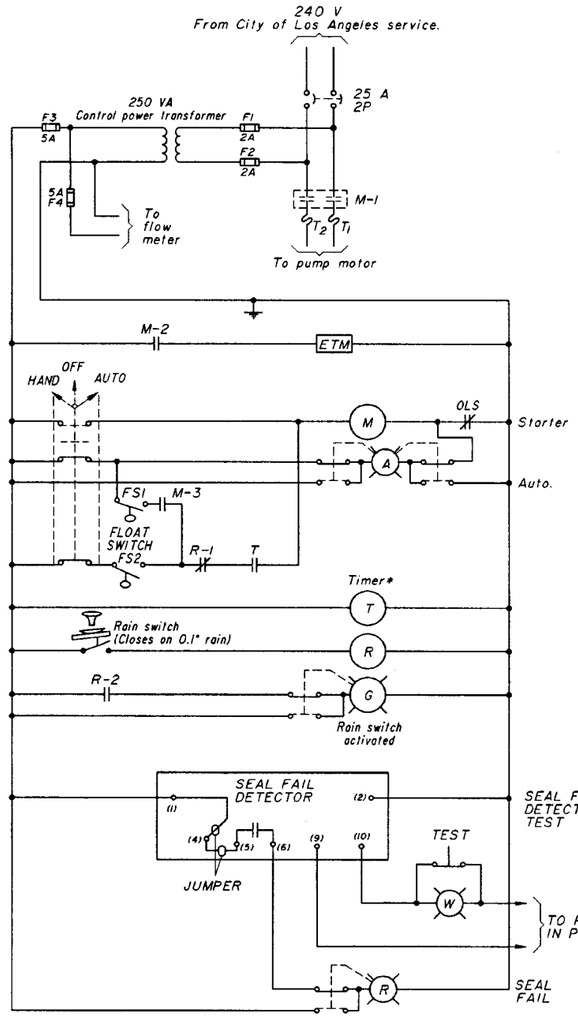

* Timer to be energized during the following hours only:

-11:00 pm to 07:00 am
-03:00 pm to 07:00 pm

SUMP PUMP CONTROL SCHEMATIC (23)

ELECTRICAL SYMBOLS AND ABBREVIATIONS

—▭—	Fuse.
—ETM—	Elapsed time meter
OL	Overload.
○	Indicator light.
—||—	Contact, normally open.
—|/|—	Contact, normally closed.
EGC	Equipment grounding conductor.
FS1	Pump stop Float switch
FS2	Pump start Float switch

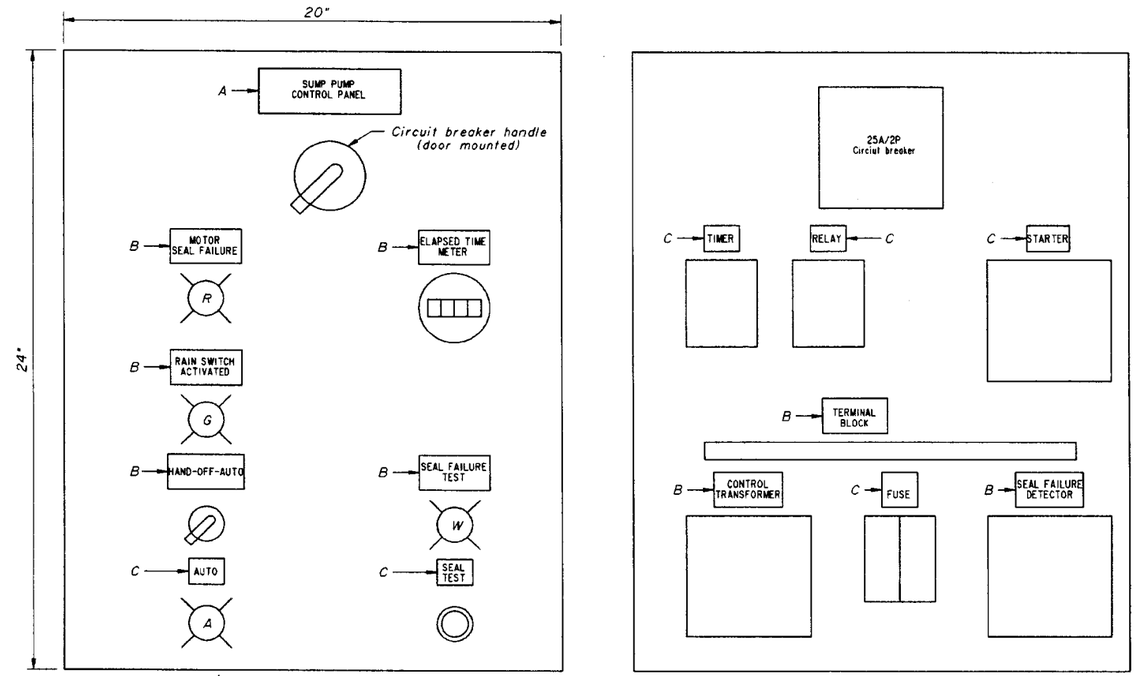

FACE

INTERIOR

SUMP PUMP CONTROL PANEL (23)

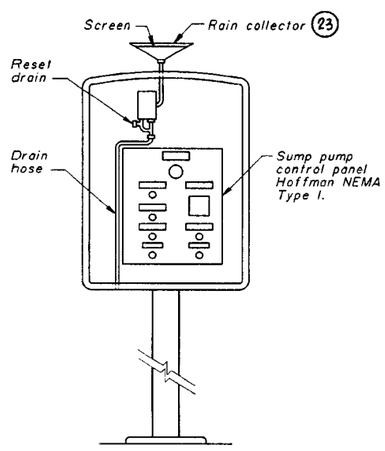

CABINET INTERIOR

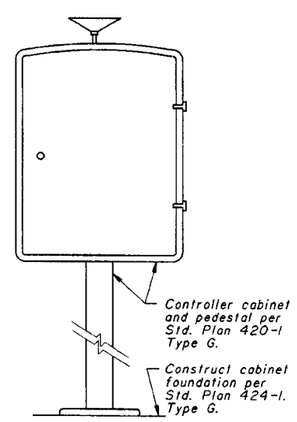

SECTION "K-K". (SHOWING CABINET ON PEDESTAL)

NOT TO SCALE

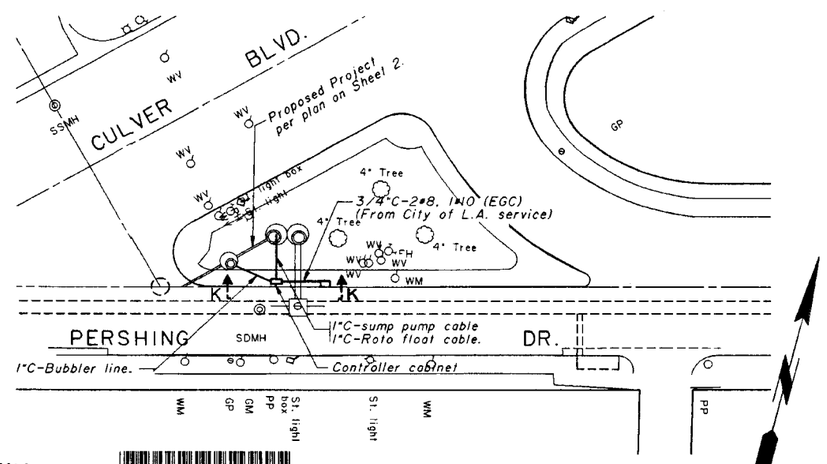

ELECTRICAL PLOT PLAN

SCALE: 1"=20'

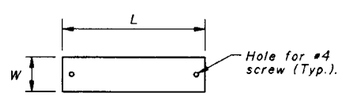

TYPE	SIZE		COLOR		LETTER SIZE	
	L	W	SURFACE	LETTERS	LINE 1	LINE 2
A	4"	1"	WHITE	BLACK	1/4"	1/4"
B	2"	3/4"	WHITE	BLACK	1/8"	1/8"
C	1"	1/2"	WHITE	BLACK	1/8"	1/8"

NAMEPLATE DETAILS

Notes:

1. Maintain a minimum clearance of 6" from conduit to all manholes.
2. Maintain a minimum of 24" Depth of cover for all condiuts.
3. Mount 24"x20"x12" deep NEMA12 Box with flow meter inside on the back side of the controller cabinet. Box shall be secured by using unistruts welded to the controller cabinet.
4. See Plan on sheet 2 for utility callouts.

DATE	MK	DESCRIPTION

REVISIONS

REGISTERED PROFESSIONAL ENGINEER — Michael Tjan — E 11832 — Exp. 9/30/00 — ELECTRICAL — STATE OF CALIFORNIA

Michael T. Tjan 3/23/99
PROJECT ENGINEER DATE

COUNTY OF LOS ANGELES DEPARTMENT OF PUBLIC WORKS

PROJECT NO. 513

PERSHING DRIVE
OCEAN OUTLET MODIFICATION

SUMP PUMP CONTROL PANEL & SCHEMATICS

JOB W 0005164 | DWG 275-513-D14.5 | SHEET 5 OF 5

DRAFTER A. Ajoto | DESIGNER H. Shalviri | CHECKER Michael Tjan | CADD PART NUMBER 960057.fld2.persh | REVIEWED BY | DATE

FORM DOT P, ANSI/ISO A1 9/92