7 RM 409067E
35' Class C5
RM: 1- POLE 35' CLASS 5 WOOD FULL TREAT
RM: 1- XA SNGL VB 10' STEEL PINS
RM: 3- INS GLASS/POLY 35KV & LESS
RM: 1- XA SNGL FB 10' STEEL PINS SECONDARY
RM: 4- SEC ROLLER (166-CLEVIS & SPOOL)
RM: 1- SEC STEEL PIN & INS - PHASE
RM: 1- AG DOWN GUY 9/32" - 50' LESS THAN 22.5KV
SET HARD SOUTH
E TO PTD

Crew will need to close a section of 80th st East - in front of 35340 80th st E - to dig and set Power Pole 409067E

SCE to PTD Pole

SOUTHERN CALIFORNIA EDISON
An EDISON INTERNATIONAL Company

NOT TO SCALE

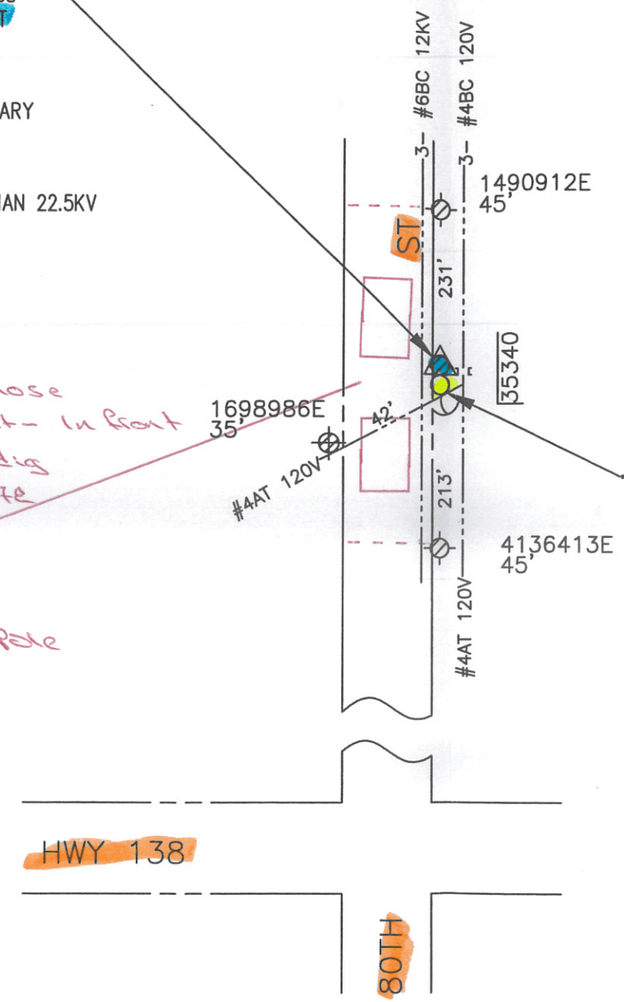

UNDERGROUND SERVICE ALERT
Dial 811
Call USA
For Underground Locating
2 Working Days Before You Dig

IN 409067E 8
40' Class C5
IN: 1- POLE 40' CLASS 5 WOOD FULL TREAT
IN: 1- XA SNGL FB 10' STEEL PINS
IN: 3- INS POLY W/PIN 12KV CLMP #6-4/0 CU
IN: 1- XA SNGL FB 10' STEEL PINS SECONDARY
IN: 4- SEC ROLLER (166-CLEVIS & SPOOL)
IN: 1- SEC STEEL PIN & INS - PHASE
IN: 1- AG DOWN GUY 9/32" - 50' LESS THAN 22.5KV

NOTE TO CREW:
TRANSFER:
3- #6BC 12KV
3- #4BC 120V
1- #4AT 120V
1- CATV

NOTES:
CIRCUIT: CALIBER 12KV
SUB: PALMDALE
CIRCUIT:
SUB:
REAR PROPERTY NO
TRUCK ACCESS YES
HAND DIG NO
TRAFFIC CONTROL NO
PTC NO
ROUTE #
BULLETIN 322 YES
ENVIRONMENTAL NO
PERMIT REQ'D NO
TYPE
TREE TRIMMING NO
CONCRETE REPAIR REQ'D NO
CRANE SET NO
GPS:
LAT: 34° 31' 26.4"
LON: 117° 59' 17.1"
ELEV: 2899'

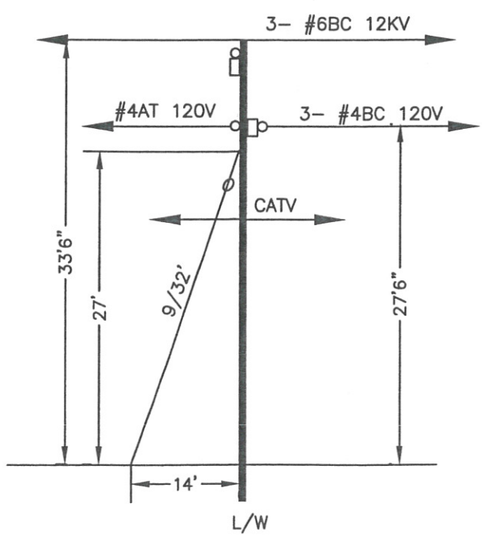

DISTRICT 36 - ANTELOPE VALLEY	PROJ. MGR. JOHN T. RODRIGUEZ PHONE (714) 973-5678		PLANNER RAND TAYLOR (HWI) PHONE (951) 826-8853		
FOREMAN	TRUCK NO.	P/E	INVENTORY MAP NO. 120-86	THOMAS GUIDE 4377 H1	GRID NO. 000	DESIGN NO. 496595_0.01
CSD 140 Y___ N_X_	BY-PASS CODE	EXISTING ___ CHANGE TO ___	TLM CHECKED ___ %LOAD	J.P.A. NO.	ASSOCIATED DESIGN NO.
PRODUCT/SAP NO. 707514-INFRASTRUCTURE REPLACEMENT - DET POLE REPLACEMENT	PRODUCT/SAP NO.		PRODUCT/SAP NO.		

TYPE	APPROVED BY	DATE	CHECKED BY	DRAWN BY HWI/ D.M.	PAX #

Southern California Edison Company

PROPOSED CONSTRUCTION (LOCATION)
TD 707514
35340 80TH ST
LITTLEROCK

SHEET ___ OF ___

JOB NO. 496595_0.01