WO. 2370

EARTH RESOURCES INC

STORM WATER POLLUTION PREVENTION PLAN (SWPPP)

Construction General Permit Order No. 2009-0009 DWQ

RISK LEVEL 1

Rolling Hills Covenant Church South Campus Administration and Children's Building Project

2222 Palos Verdes Drive North, Rolling Hills Estates, CA 90274

WDID No. 4 19C364026

Prepared for:

Rolling Hills Covenant Church
C/O Mr. Craig Knickerbocker
Knickerbocker & Associates
827 Deep Valley Drive #100, Rolling Hills Estates CA 90274

SWPPP Preparation Date: July 17, 2012

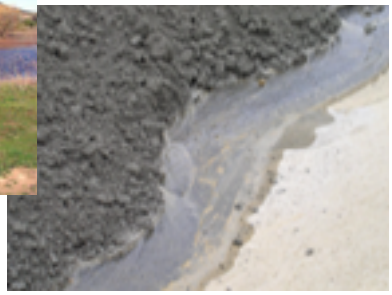

Earth Resources Inc.
18302 Sierra Hwy #102 Santa Clarita, CA 91351
office (800) 554-3205 fax (800) 554-4205

TABLE OF CONTENTS

SWPPP CERTIFICATION BY QUALIFIED SWPPP DEVELOPER 4

SWPPP CERTIFICATION BY LEGALLY RESPONSIBLE PERSON (LRP) 7

1.0 SWPPP REQUIREMENTS 8

- 1.1 INTRODUCTION 8
- 1.2 PERMIT REGISTRATION DOCUMENTS (PRDS) 10
- 1.3 SWPPP AVAILABILITY AND IMPLEMENTATION 11
- 1.4 SWPPP AMENDMENTS 11
- 1.5 RETENTION OF RECORDS 11
- 1.6 REQUIRED NON-COMPLIANCE REPORTING 12
- 1.7 ANNUAL REPORT 14
- 1.8 CHANGES TO PERMIT COVERAGE 15
- 1.9 NOTICE OF TERMINATION 16

2.0 PROJECT INFORMATION 17

- 2.1 PROJECT AND SITE DESCRIPTION 17
- 2.2 STORMWATER RUN-ON 19
- 2.3 CONSTRUCTION SITE SEDIMENT AND RECEIVING WATER RISK DETERMINATION 19
  - *2.3.1 Construction Pollutants and Numeric Action Levels (NALs)* *23*
  - *2.3.2 Good Housekeeping and Inspections* *24*
- 2.4 CONSTRUCTION ACTIVITIES SCHEDULE 27
- 2.5 POTENTIAL CONSTRUCTION SITE POLLUTANT SOURCES 27
- 2.6 IDENTIFICATION OF NON-STORMWATER DISCHARGES 29

3.0 BEST MANAGEMENT PRACTICES 30

- 3.1 SCHEDULE FOR BMP IMPLEMENTATION 30
- 3.2 EROSION, SEDIMENT AND DUST CONTROL 30
- 3.3 NON-STORMWATER, WASTE MANAGEMENT AND MATERIALS POLLUTION CONTROL 38
- 3.4 POST-CONSTRUCTION STORMWATER MANAGEMENT MEASURES 43

4.0 BMP INSPECTION, MAINTENANCE, AND RAIN EVENT ACTION PLANS 43

- 4.1 BMP INSPECTION AND MAINTENANCE 43
- 4.2 RAIN EVENT ACTION PLANS (REAP) 44

5.0 TRAINING 44

6.0 RESPONSIBLE PARTIES AND OPERATORS 45

- 6.1 RESPONSIBLE PARTIES 45
- 6.2 CONTRACTOR LIST 47

7.0 CONSTRUCTION SITE MONITORING PROGRAM 47

- 7.1 PURPOSE 47
- 7.2 APPLICABILITY OF PERMIT REQUIREMENTS 48
- 7.3 MONITORING LOCATIONS 49
- 7.4 SAFETY 50
- 7.5 VISUAL MONITORING 54

7.6 WATER QUALITY SAMPLING AND ANALYSIS 57
7.6.1 Sediment and Turbidity Sampling *60*
7.6.2 PH Sampling *60*
7.6.3 Non-Visible Pollutant Sampling *61*
7.7 WATERSHED MONITORING OPTION 61
7.8 QUALITY ASSURANCE AND QUALITY CONTROL 62
7.9 REPORTING REQUIREMENTS 63
7.9.1 NAL Exceedance Reporting *64*
7.10 RECORDS RETENTION 65

LIST OF APPENDICIES

APPENDIX A ……Construction General Permit
APPENDIX B……...Vicinity Map and Submitted Permit Registration Documents
APPENDIX C ……..SWPPP Amendment Log
APPENDIX D……NAL/NEL Exceedance Site Evaluations
APPENDIX E…… Changes to PRDs (Due to Change in Ownership or Acreage)
APPENDIX F……Construction Schedule
APPENDIX G……BMPs Selected to Control Potential Pollutants
APPENDIX H……CASQA BMP Handbook Fact Sheets
APPENDIX I ……..Construction Site Inspection Report Form
APPENDIX J ……..Rain Event Action Plan Template
APPENDIX K……..Training Reporting Form
APPENDIX L……Responsible Parties
APPENDIX M……Contractors and Subcontractors
APPENDIX N ……..Construction Site Monitoring Program
APPENDIX O ……..List of Potential Construction Pollutants

SWPPP Certification by Qualified SWPPP Developer

Initial SWPPP Certification of the Storm Water Pollution Prevention Plan

Project Name: Rolling Hills Covenant Church Administration & Children's Building
2222 Palos Verdes Drive North, Rolling Hills Estates, CA 90274

WDID No.: 4 19C364026

"As a Qualified SWPPP Developer (QSD), I have selected appropriate BMPs to effectively minimize the negative impacts of this project's construction activities on storm water quality in general accordance with requirements of the Construction General Permit Order No. 2009-0009-DWQ (hereafter CGP). The project owner/developer is aware that the selected BMPs must be installed, monitored, and maintained to ensure their effectiveness. The BMPs not selected for implementation were considered redundant or deemed not applicable to the proposed construction activity at the time of the preparation of this document. However, changing conditions during construction may warrant consideration of alternate or modified BMPs."

It should be noted that each amendment to this SWPPP shall be signed by the Qualified SWPPP Developer as per CGP Sec. VII B.6.(see Appendix A)

July 17, 2012

Prepared By (Signature)	Date
Joseph A. Cota, CGP ToR QSD/P #00037, CEG 1490 President, Earth Resources, Inc.	(800) 554-3205
Name and Title	Telephone Number

CERTIFICATE OF QUALIFICATION
CALIFORNIA CONSTRUCTION GENERAL PERMIT
TRAINER OF RECORD
FOR QSD AND QSP TRAINING COURSE
Joseph A. Cota
August 12, 2010 – August 12, 2012
CASQA
CALIFORNIA STORMWATER QUALITY ASSOCIATION
California Stormwater Quality Association and
California Construction General Permit Training Team

CERTIFICATE OF TRAINING
CALIFORNIA CONSTRUCTION GENERAL PERMIT
QUALIFIED SWPPP DEVELOPER (QSD)
AND
QUALIFIED SWPPP PRACTITIONER (QSP)
Joseph Cota
January 27, 2011 – January 27, 2013
Certificate # 00037
CASQA
CALIFORNIA STORMWATER QUALITY ASSOCIATION
California Stormwater Quality Association and
California Construction General Permit Training Team

SWPPP Certification by Legally Responsible Person (LRP)

Initial SWPPP Certification of the
Storm Water Pollution Prevention Plan

Project Name: Rolling Hills Covenant Church Administration & Children's Building
2222 Palos Verdes Drive North, Rolling Hills Estates, CA 90274

WDID No.: 4 19C364026

"I certify that this document and all attachments were prepared under my direction or supervision in accordance with a system designed to assure that qualified personnel properly gather and evaluate the information submitted. Based on my inquiry of the person or persons who manage the system or those persons directly responsible for gathering the information, the information submitted is true, accurate and complete. I am aware that submitting false and/or inaccurate information, failing to update the SWPPP to reflect current conditions, or failing to properly and/or adequately implement the SWPPP may result in revocation of grading and/or other permits or other sanctions provided by law."

Reviewed/Certified By (Signature)	Date
Mr. Craig Knickerbocker, Project Manager	310-541-9022
Name and Title	Telephone Number

Acceptance or approval of this Storm Water Pollution Prevention Plan in no way precludes the authority of the agency to require modification to the plan as conditions warrant, nor does agency take responsibility for performance of BMPs provided for in the Plan.

1.0 SWPPP Requirements

1.1 Introduction

Rolling Hills Covenant Church South Campus project is located at 2222 Palos Verdes Drive North, Rolling Hills Estates, California. The 7.5 acre property is presently developed with a Church, associated out-buildings, a children's park, and paved parking areas. It is proposed to construct a 16,130 sq ft, one- to two--story Administration and Children's Building easterly of the existing church building. The project also includes a 367 sq ft on-story Choir Building Addition and construction of a 1,000 ft sq two-story Maintenance Shed. Other related improvements include repaving of both the entrance driveways and portions of the parking lots, realignment of the easterly driveway, installation of approximately 19,000 sq ft of Grasspave surface in parking stalls, and construction of two flow-through type stormwater filter planter boxes.

This Storm Water Pollution Prevention Plan (SWPPP) has been developed to comply with the State of California's General Permit for Storm Water Discharges Associated with Construction and Land Disturbance Activities, State Water Resources Control Board (SWRCB) Order No. 2009-0009-DWQ, NPDES No. CAS000002 ("General Permit" or CGP) for a **Risk Level 1** project. A copy of the General Permit is included in Appendix A.

A Glossary and Acronym List are included in Appendices 5 and 6, respectively, of the General Permit for convenience to the user. The entire General Permit including all of its appendices and attachments is included in Appendix A of this SWPPP as a complete reference for users of this SWPPP.

A copy of this SWPPP, all SWPPP amendments, inspection checklists, Annual Compliance Certifications, and a copy of the General Permit are required to be kept on the construction site while construction is active. The major objectives of the SWPPP are identified in the General Permit (Section XIV. A).

The discharger shall ensure that the SWPPP for any traditional project site is developed and amended or revised by a Qualified SWPPP Developer (QSD). The SWPPP shall be developed to address the following objectives:

1. All pollutants and their sources, including sources of sediment associated with construction, construction site erosion and all other activities associated with construction activity are controlled;
2. Where not otherwise required to be under a Regional Water Quality Control Board (RWQCB) permit, all non-storm water discharges are identified and either eliminated, controlled, or treated;
3. Site *Best Management Practices* (BMPs) are effective and result in the reduction or elimination of pollutants in storm water discharges and authorized non-storm water discharges from construction activity to the *Best Available Technology/ Best Control Technology* (BAT/BCT) standard;
4. Calculations and design details (as contained in the Erosion Control Plan by the Project Civil Engineer) as well as BMP controls for site run-on are complete and correct, and
5. Stabilization BMPs installed to reduce or eliminate pollutants after construction is completed.

Additional SWPPP objectives

- Identify post-construction BMPs, which are those measures to be installed during construction that are intended to reduce or eliminate pollutants

after construction is completed (as required by the general permit Sec. XIII.B)

- Identify and provide methods to implement BMP inspection, visual monitoring, preparation of Rain Event Action Plan (REAP) and Construction Site Monitoring Program (CSMP) requirements to comply with the General Permit.
- Identify a sampling and analysis strategy and sampling schedule for discharges from Risk Level 2 and Risk Level 3 sites (if applicable)
- For all construction activity, identify a sampling and analysis strategy and sampling schedule for discharges that have been discovered through visual monitoring to be potentially contaminated by pollutants not visually detectable in the runoff.

Note: Post Construction BMPs should be developed by the Project Civil Engineer early in the project planning and design process and incorporated into the grading street improvement, storm drain, and other development plans.

1.2 Permit Registration Documents (PRDs)

Permit Registration Documents (PRDs) refers to the completed Notice of Intent (NOI) application and other documents necessary for a construction project to obtain coverage under the general permit. The NOI was filed electronically via SWRCB's *Storm Water Multiple Application and Report Tracking System* (SMARTS)

Rolling Hills Covenant Church filed a Notice of Intent (NOI) under Order No. 2009-0009-DWQ via the SMARTS online database on July 6, 2012. The NOI was approved by SWRCB on July 9, 2012 and the project was issued WDID 4 19C364026. Mr. Craig Knickerbocker, Project Manager is the Legally Responsible Person (LRP) for the project.

A copy of the NOI receipt is included with the project PRDs in Appendix B.

1.3 SWPPP Availability and Implementation

The General Permit (Sec XIV.C) requires the SWPPP be available at the construction site during working hours while construction is occurring and shall be made available upon request by a State or Municipal inspector. When the original SWPPP is retained by a crewmember in a construction vehicle and is not currently at the construction site, current copies of the BMPs and map/drawing will be left with the field crew and the original SWPPP shall be made available via a request by radio/telephone.

The SWPPP shall be implemented concurrently with the start of ground disturbing activities.

1.4 SWPPP Amendments

The general permit requires that SWPPP be amended or revised by a QSD (Section XIV.A) and that the SWPPP include a listing of the date of initial preparation and the date of each amendment. Amendments must be signed by a QSD (Section VII.B.6).

It is recommended that all amendments be dated, directly attached to the SWPPP, and logged into the SWPPP Amendment Log in Appendix C.

1.5 Retention of Records

The General Permit (Section I.J.69) requires that all dischargers maintain a paper or electronic copy of all required records for three years from the date generated or

date submitted, whichever is last. These records must be available at the construction site until construction is completed. For *Linear Underground/Overhead Projects* (LUPs), these documents may be retained in a crew member's vehicle and made available upon request.

The discharger shall furnish the RWQCB, SWRCB, or US Environmental protection Agency (EPA), within a reasonable time, any requested information to determine compliance with this General Permit.

For active projects we recommend that the SWPPP and copies of the PRDs be kept in the jobsite construction trailer. For inactive projects where construction is temporarily idle for an extended period of time, the SWPPP could be kept in the main office of the Owner/Developer, but a notice including the WDID number, location of where the SWPPP is located, and an emergency contact name and number should be posted in a prominent location, such as the main gate to the construction site.

A full copy of the SWPPP and all amendments should also be uploaded to the SMARTS database so that electronic copies of the SWPPP, amendments, and PRDs are always available for SWRCB, RWQCB, local agency inspectors, subcontractors, etc. to access and review.

1.6 Required Non-Compliance Reporting

The General Permit identifies several areas of non-compliance reporting. It is the responsibility of the permittee to properly document reportable discharges or other violations of the General Permit. Exceedances and violations should be reported using the online SMARTS database system and include the following:

- Numeric Action level (NAL) exceedances (NAL Exceedance Report upon request of the RWQCB)
- Numeric Effluent Limitation (NEL) Violation Report **(NOTE: NELs are presently not in effect at the time of preparation of this report pending SWRCB amendments to the CGP)**
- Self-reporting of any other discharge violations or to comply with RWQCB enforcement actions
- Discharges which contain a hazardous substance in excess of reportable quantities established in 40 CFR § 117.3 and 302.4, unless a separate NPDES permit has been issued to regulate those discharges. (Examples include NPDES permits for hydraulic testing of water tanks and line flushing operations)

In the event of the exceedance of a NAL, the subsequent site evaluation shall be documented in the SWPPP and specifically address whether or not the source(s) of the pollutants causing the exceedance of the NAL:

a. Are related to construction activities and whether additional BMPs are required to (1) meet BAT/BCT requirements; (2) reduce or prevent pollutants in storm water discharges from causing exceedances of receiving water objectives; and (3) determine what corrective action(s) were taken or will be taken and with a description of the schedule for completion.

AND/OR

b. Are related to the run-on associated with the construction site location and whether additional BMP measures are required to (1) meet BAT/BCT requirements; (2) reduce or prevent pollutants

in storm water discharges from causing exceedances of receiving water objectives; and (3) determine what corrective action(s) were taken or will be taken and with a description of the schedule for completion.

It is recommended that documentation of all reportable exceedances be included in the SWPPP as required by the General Permit (Section V.C.4). Results for all NAL exceedance site evaluations along with other non-compliance events should be attached to this SWPPP in Appendix D.

1.7 Annual Report

The General Permit requires that all permittees prepare, certify, and electronically submit an Annual Report each year. The reporting period is from July 1 through June 30 of the following reporting year. ***The Annual Report must be completed and uploaded to the SMARTS database no later than September 1 of each year.***

Reporting requirements are identified in Section XVI of the General Permit and include (but are not limited to) providing a summary of:

1. Sampling and analysis results including laboratory reports, analytical methods and reporting limits, and chain-of-custody forms (mandatory sampling for Risk Levels 2 and 3 sites; pollutant sampling for all risk level sites where sampling is conducted in response to a spill or observed breech or failure of a BMP which has the potential to release non-visible pollutants);
2. Corrective actions and compliance activities, including those not implemented;
3. Violations of the General Permit;

4. Date, time, place, and name(s) of the inspector(s) for all sampling, inspections, and field measurement activities;
5. Visual observation and sample collection exception records; and
6. Training documentation of all personnel responsible for General Permit compliance activities.

It is recommended that copies of all Annual Reports should also be retained with the SWPPP and PRDs on the construction site.

1.8 Changes to Permit Coverage

The General Permit (Section II.C) allows a permittee to reduce or increase the total acreage covered under the General Permit when a portion of the project is complete and/or conditions for termination of coverage have been met, when ownership of a portion of the project is sold to a different entity, or when new acreage is added to the project.

To change the acreage covered, the permittee must electronically file modifications to PRDs in accordance with requirements of the General Permit within 30 days of a reduction or increase in total disturbed area. These modifications must include, as a minimum, a revised NOI, revised site map, SWPPP revisions as appropriate, and certification that the new landowners have been notified of applicable requirements to obtain General Permit coverage (including name, address, phone number, and e-mail address of the new landowner).

If project acreage has increased, dischargers shall mail payment of revised annual fees within 14 days of receiving the revised annual fee notification.

Printed copies of all updates to PRDs submitted via SMARTS system should be included in the SWPPP in Appendix E. Document any related SWPPP revisions/amendments (Section II.C.2) in the SWPPP in Appendix C.

1.9 Notice of Termination

Within 90 days of when construction is complete or ownership has been transferred, the discharger shall electronically file a Notice of Termination (NOT), a final site map, and photos through the State Water Boards SMARTS system (Section II.D.1).

Filing a NOT certifies that all General Permit requirements have been met. The Regional Water Board will consider a construction site complete only when all portions of the site have been transferred to a new owner, or all of the following conditions have been met:

- For purposes of "final stabilization", the site will not pose any additional sediment discharge risk than it did prior to the commencement of construction activity.
- All construction related equipment, materials, and any temporary BMPs no longer needed are removed from the site.
- Post-construction stormwater management measures are installed and a long-term maintenance plan that is designed for a minimum of five years has been developed.

The discharger shall certify that final stabilization conditions are satisfied in their NOT. Failure to certify shall result in continuation of the permit coverage and annual billing.

The NOT must demonstrate through photos, Revised Universal Soil Loss Equation (RUSLE) results or results of other appropriate testing and analysis that the site meets all of the requirements of Section II.D.1 of the General Permit by one of the following methods:

- 70% final vegetation cover on all graded or disturbed ground surfaces (no computational proof required); or
- RUSLE/RUSLE2 method (computational proof required); or
- "Custom method", the discharger shall demonstrate in some other that the site complies with final stabilization.

2.0 Project Information

2.1 Project and Site Description

Location and Topography

The project is located along the south side of Palos Verdes Drive North, between Western Ave. and Palos Verdes Drive East in the City of Rolling Hills Estates, California (see Vicinity Map, Appendix B). Roughly trapezoidal in shape, the site contains approximately 7.5 acres developed as a Church. The site slopes southeasterly from approximate elevation 310 ft MSL at the northwesterly corner to 273 ft. MSL at the southeasterly corner.

The site is bordered by an existing cemetery to the east and the Metropolitan Water District's Palos Verdes Reservoir (empty) to the west and south.

Surface water is limited to seasonal precipitation falling directly on the site. There is no off-site run-on water impacting the project. Storm Water from Palos Verdes Drive North enters a catch basin in the street to the east of the main Church driveway (east entrance). Surface drainage on the site is by sheet flow and local area drains toward an existing catch basin and storm drain at the south corner of the property.

The proposed construction will not alter the overall site drainage pattern although new area drains and a system of flow-through biofilter planter boxes will be constructed.

Site Soil Conditions

The geotechnical investigation for the project included excavation of 5 borings conducted by Western Labs (July 5, 2011). According to their report and boring logs, four of the five exploration borings encountered 2 to 3 feet of sandy clay fill soil. The fill is underlain by firm sandy clay and silty sand alluvial soils. Diatomaceous mudstone bedrock was encountered below the alluvium at depths ranging from 13 to 19 feet below ground surface. Removals are recommended to be 5 feet under building areas and two feet below pavement.

The mapped K-factor of the soil is 0.32 (for use in the RUSLE equation for calculation of Risk factor). The fines portion of the soil (silt and clay fraction) has the potential for turbidity and sedimentation in stormwater discharge, therefore an effective combination of erosion and sediment control BMPs is required.

Receiving Waters

Surface runoff from the site flows southeasterly to an existing catch basin on the southeasterly corner of the property. The water then flows to LA County Department of Public Works PD 969 and 180, and then is conveyed through a series of LA County and LA City storm drains, ultimately discharging indirectly to Los Angeles Harbor.

The receiving waters are not listed on the 303d list for sediment or turbidity and are not designated as beneficial uses of SPAWN, MIGRATORY, or COLD.

Therefore the receiving water Risk is considered "LOW".

Proposed Construction

It is proposed to construct a 16,130 sq ft, one- to two--story Administration and Children's Building easterly of the existing church building. The project also includes a 367 sq ft on-story Choir Building Addition and construction of a 1,000 ft sq two-story Maintenance Shed. Other related improvements include repaving of both the entrance driveways and portions of the parking lots, realignment of the easterly driveway, installation of approximately 19,000 sq ft of Grasspave surface in parking stalls, and construction of two flow-through type stormwater filter planter boxes.

Regrading of the site will involve removal and recompaction of approximately the upper 2 to 5 feet of soil. The approximate area of the site to be graded is 2.78 acres.

Proposed construction is shown on the grading plans by R.T. Quinn & Associates and schematically on the SWPPP Map in Appendix B. The SWPPP Map uses the Erosion Control Plan as its base.

2.2 Stormwater Run-On

There is no stormwater run-on impacting the project. Storm water from Palos Verdes Drive North is collected in a catch basin in the street east of the easterly driveway. Surface water impacting the construction area is limited to precipitation falling directly on the property.

2.3 Construction Site Sediment and Receiving Water Risk Determination

This is a Risk Level 1 project. The overall or Combined Risk Level for the site is determined by evaluation of the combined Site Sediment Risk and Receiving Water

Risk. This is a three step process consisting of 1) determination of Sediment Risk, 2) determination of Receiving Water Risk, and 3) determination of Combined Risk Level.

A summary of the risk determination conducted for this project is presented below.

Step 1. Sediment Risk Determination

Sediment Risk determination for the project was calculated by using the methods set forth in the Appendix 1 of the General Permit. The EPA's online Rainfall Erosivity Factor Calculator was not available for use for this project because of database revisions being made by the EPA. Therefore the R-factor was manually determined using the Rainfall Erosivity Index map, Isoerodent Map of California, and Erosivity Index Tables available from the USEPA as modified by SWRCB (March 2012). The LS factor was determined using site elevations and distances taken from the existing pre-construction topographic contours from the site grading plans. The K-factor value for site soils was obtained using the Statewide RUSLE K-Factor GIS mapping available in SMARTS. All of the analyses were then uploaded to the online SMARTS database.

A. R-Factor Value

1. Start of construction date: September 15, 2012
2. Completion date: September 2, 2013
3. Erosivity Index Zone = **25** (from EPA Figure 1)
4. Erosivity Index Table (SWRCB Fact Sheet 3.2, Table 1):

   September 15- December 31, 2012 = 100 – 65.31 = 34.7%

   January 1- September 2, 2013 = 65.3 - 0 = 65.3%

   Total percentage Annual R value = 34.7% + 65.3% = **100%**

5. Isoerodent Map Value = **35** (Interpolated from Figure 4, Isoerodent Map of California)

6. **R-factor =** 35 X 100% **= 35.0**

B. K- Factor Value

K-factor = 0.32
(auto populate from SMARTS, confirm by manual review of SWRCB GIS Soil Map)

C. LS Factor

LS Factor = 1.26
Determined from SMARTS auto populate, verified by SWRCB LS Factor GIS Map.

D. Site Sediment Risk Factor

Site Sediment Risk Factor, **A = R * K * LS**

A = 35 * 0.32 * 1.26 **= 14.1 tons/acre**

Low Sediment Risk: < 15 tons/acre
Medium Sediment Risk: >/= 15 and <75 tons/acre
High Sediment Risk: >/= 75 tons/acre

Therefore Sediment Risk Factor is **LOW**

Step 2. Receiving Water Risk

The receiving water risk for this project was determined by using the Statewide Receiving Water Risk GIS map used in the SMARTS database system. This map is a compilation of SPAWN, MIGRATORY, and COLD beneficial uses maps published by UC Davis, plus the SWRCB adopted TMDLs and 303(d) list. This determination

was automatically populated by the SMARTS system using the project location coordinates and the GIS database. In addition, we visually checked the printed map to ensure proper site location.

Based upon this information the following receiving water risk was determined to be **LOW**.

Note: Confirmed LOW receiving water risk by manual review of SWRCB Statewide Map of High Receiving Water Risk Watersheds.

Step 3. Combined Risk Level Determination

Both Sediment Risk and receiving water risk are LOW. The Combined Risk Level for the project based upon the following combined risk level matrix contained in the General Permit is **Risk Level 1**.

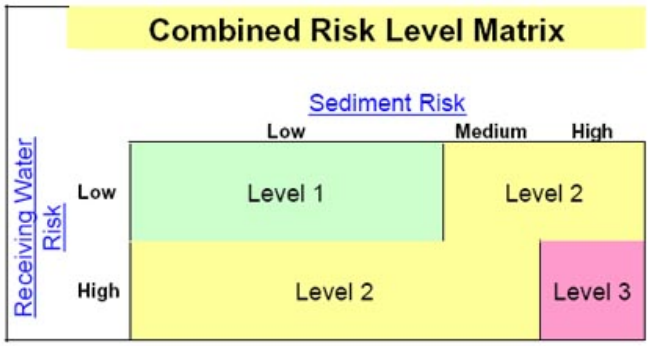

Project Risk Level 1 Requirements

Risk Level 1 Requirements are presented in Attachment C of the CGP and included herein in Appendix A.

The following is a summary of the Risk Level 1 requirements. Please refer to Attachment C of the General Permit for greater detail.

General

1) Risk Level 1 sites must do not require mandatory sampling for pH and turbidity in stormwater and non-stormwater discharges, and 2) Risk Level 1 sites do not require preparation of a **Rain Event Action Plan (REAP)** before predicted storm events.

Risk Level 1 Monitoring and Reporting Requirements

Summary of Monitoring Requirements

Risk Level	Visual Inspections					Sample Collection	
	Quarterly Non-storm Water Discharge	Pre-storm Event		Daily Storm BMP	Post Storm	Storm Water Discharge	Receiving Water
		Baseline	REAP				
1	X	X		X	X		

2.3.1 Construction Pollutants and Numeric Action Levels (NALs)

All projects are required to conduct an inventory of the construction materials and products used, or expected to be used, and to prevent these materials from introducing pollutants in stormwater and non-stormwater discharges through the use of controls, structures and management practices that achieve the **Best Available Technology Economically Feasible (BAT)** for toxic and non-conventional pollutants and the **Best Conventional Pollutant Control Technology (BCT)** for conventional pollutants.

Risk Level 1 dischargers are not subject to the numeric action levels (NALs) which apply to Risk Level 2 projects (i.e. pH NAL = 6.5 to 8.5; turbidity NAL ≥ 250 NTU). Therefore mandatory sampling for pH and turbidity is not required for this project.

However, Risk Level 1 stormwater discharges and authorized non-stormwater discharges shall not contain a hazardous substance equal to or in excess of reportable quantities unless a separate NPDES permit has been issued to regulate those discharges.

2.3.2 Good Housekeeping and Inspections

Risk Level 1 dischargers shall implement good site management (i.e. "housekeeping") measures for construction materials that could potentially be a threat to water quality if discharged. At a minimum, Risk Level 1 dischargers shall implement the good housekeeping measures, conduct weekly site inspections, perform regular BMP maintenance, maintain inspection and maintenance records, and conduct all other minimum requirements under the supervision of a QSP in accordance with the minimum Risk Level 1 requirements specified in Attachment C of the CGP. A record should be kept for BMP maintenance and changes throughout all phases of construction.

Dischargers shall ensure that all inspection, maintenance, repair and sampling activities at the project location shall be performed or supervised by a **Qualified SWPPP Practitioner (QSP)** representing the discharger. The QSP may delegate any or all of these activities to an employee appropriately trained to do these tasks.

All dischargers shall develop and implement a written site-specific Construction Site Monitoring Program (CSMP). The CSMP shall include all monitoring procedures and instructions, location maps, forms, and checklists in this section. The CSMP shall be a part of the SWPPP.

Dischargers for all Risk Levels shall ensure that all construction traffic to and from the project is limited to entrances and exits that employ effective BMPs to prevent off-site tracking of sediment.

Dischargers for all Risk Levels shall ensure that all storm drain inlets and perimeter controls are protected from activities that reduce their effectiveness.

Risk Level 1 dischargers ***shall inspect on a daily basis all immediate access roads*** and shall remove any sediment or other construction related materials prior to any rain event or more frequently when necessary.

Risk Level 1 dischargers ***shall perform weekly inspections*** and observations, and at least once each 24-hour period during extended storm events to identify and record BMPs that need maintenance to operate effectively. Inspectors shall be the QSP or be trained by the QSP.

Risk Level 1dischargers ***shall visually observe (inspect) stormwater discharges at all discharge locations within two business days (48 hours) after each qualifying rain event***. A qualifying rain event is any event that produces 0.5 inches or more precipitation within a 48-hour or greater period between rain events.

Risk Level 1 dischargers are not subject to mandatory sampling of stormwater from discharge points during qualifying storm events.

Risk Level 1 dischargers are not required to physically collect samples or conduct visual observations (inspections) during dangerous weather conditions such as flooding and electrical storms or outside of scheduled site business hours.

Upon identifying failures or other shortcomings, the Risk Level 1 dischargers ***shall begin implementing repairs or design changes to BMPs <u>within 72 hours</u> of identification*** and complete the changes as soon as possible.

Risk Level 1 dischargers shall ensure that all inspection, maintenance repair and sampling activities (if sampling becomes required due to a spill or breached BMP for non-visible pollutants) shall be performed by a Qualified SWPPP Practitioner (QSP) representing the developer. The QSP may delegate any and all of these activities to an employee trained to do the task(s) appropriately, but shall ensure adequate deployment.

Risk Level 1 dischargers are required to perform weekly inspections and observations and at least once each 24-hour period during extended storm events to identify and record BMPs that need maintenance. Inspectors shall be the QSP or be trained by the QSP.

Risk Level 1 dischargers <u>are not</u> required to develop a REAP 48 hours prior to any likely precipitation event. A likely precipitation event is any weather pattern that is forecast to have a 50% or greater probability of producing precipitation in the project area.

2.4 Construction Activities Schedule

The following is the tentative construction schedule based upon a September 15, 2012 start date for demolition of the existing commercial structures.

Construction Activity	Start	Complete
Implement Erosion Control Plan BMPs	0ctober 1st each year	April 15th each year
Implement Sediment Control and Wind Erosion Control BMPs	All year- Sediment control BMPs to be in place prior to Sept 15, 2012 start of construction.	Maintain continuously until project completion and final paving and landscape stabilization
Annual Compliance Report	September 1 each year	
Rough site grading (entire site and stabilize building pad for future bank site	September 15, 2012	October 1, 2012
Vertical Construction and Paving	October 1, 2012	September 2, 2013
All construction complete with stabilized future bank pad site to be completed by others		September 2, 2013

Construction schedules are subject to change. Updated construction schedules and changes to the schedule should be recorded in Appendix F of the SWPPP. **If changes in the schedule result in delay of the project completion date, the CGP requires that project Risk Level be recalculated.**

2.5 Potential Construction Site Pollutant Sources

The General Permit requires that permittees conduct an assessment and create a list of potential pollutant sources and identify areas of the site where BMPs are necessary to reduce or prevent pollutants in stormwater discharges (General Permit Attachment D and Section B.5). The following is a list of construction materials that

will be used and activities that will be performed that have the potential to contribute pollutants, other than sediment, to storm water runoff:

- Vehicle fluids including oil, grease, fuel, coolants
- Asphaltic emulsions
- Cement and lime products
- Stucco operations, materials and mixing, potential for non-storm discharge
- Joint and curing compounds
- Paints
- Solvents/thinners
- Treated wood products
- Metals and plated products
- Fertilizers, pesticides, herbicides, and other landscape materials
- Waste materials, containers and packaging from many of the above materials
- Sanitation Facilities (portable toilets)

Construction activities that have the potential to contribute sediment to storm water discharges include:

- Sediment Tracking from site onto paved streets
- Rough and fine grading operations (sediment tracking, dust, equipment fluids)
- Foundation excavation and construction (sediment tracking/cement products)
- Stucco operations (lime products, potential for non-storm discharge)
- Landscape operations
- Dewatering Operations
- Utility Trenching Operations
- Soil/Material Stockpiles have wind erosion/dust potential

Appendix G lists all of the Best Management Practices (BMPs) that have been considered and selected for implementation on this project to prevent potential construction pollutants and sediment from migrating from the site via stormwater runoff. Implementation and location of BMPs selected for this project are shown on the SWPPP Map in Appendix B. Narrative descriptions of BMPs to be used during this project are listed by category in each of the following SWPPP sections. Appendix H includes copies of the CASQA Handbook BMP fact sheets selected for this project.

2.6 Identification of Non-Stormwater Discharges

The General Permit requires that dischargers identify all non-stormwater discharges (where not otherwise required to be under separate RWQCB permit) and that non-stormwater discharges be eliminated, controlled, or treated. An inventory of construction activities and potential non-storm water discharges is provided in Section 2.5. The BMP Consideration Checklist in Attachment G and the list below indicates the BMPs that have been selected to control non-storm water pollution on the construction site. Potential sources for non-stormwater discharges for this project are as follows:

- Concrete truck and equipment rinsing
- Concrete and mortar mixing and equipment cleaning during wall construction
- Paving a operations
- Vehicle and equipment cleaning/maintenance (not recommended on site)
- Vehicle and equipment fueling
- Concrete finishing (walls, foundations, storm drains)
- Potable water, grading and dust control water, and Irrigation water

3.0 Best Management Practices

3.1 Schedule for BMP Implementation

Implementation of each of the recommended BMPs should coincide with the construction activity. Each SWPPP BMP should be in place and functional prior to the construction activity to which it applies rather than placing BMPs after a problem has occurred. For example, the concrete wash out area (WM-8) must be completed prior to accepting concrete trucks onto the site. Erosion Control BMPs should be in place during the rainy season (October 1 through April 15); however, SWPPP BMPs providing protection for pollutants such as sediment tracking, dust control, and non-stormwater discharges must be implemented and maintained on a year-round basis until the construction activity in that area which it protects is completed and/or final stabilization of the disturbed area is complete.

BMP implementation should coincide with the preliminary construction schedule in section 2.4, and revised as necessary to coincide with construction schedule amendments in Appendix F. Additional BMP scheduling details are presented in Section 3.2 below.

3.2 Erosion, Sediment and Dust Control

<u>BMPs Specific to This Project</u>

1. There are two entrances to the site and both are presently paved. During realignment and paving of the east driveway, all traffic and construction traffic should be limited to the west driveway to minimize the potential for sediment tracking onto Palos Verdes Drive North. Paving of the west driveway should commence either before or after improvements to the east driveway so that one paved entrance for construction traffic is open for use at all times. If this

can not be accomplished or it is desired that grading and paving of both driveways be done concurrently, then a TC-1 Stabilized Construction Entrance will be required.

2. Storm drain inlet protection for sediment will be required for all catch basins below construction and paving operations areas and maintained until all construction has been completed.

3. Dust control shall be enforced at all times. Any soil stockpiles or bare areas of ground in which there will be no construction activity for 14 days or longer shall be stabilized with polyacrylamide or other soil binder.

General

Erosion Control

Erosion control, also referred to as soil stabilization, consists of source control measures that are designed to prevent soil particles from detaching and becoming transported in storm water runoff. Some erosion control BMPs protects the soil surface by covering and/or binding soil particles. Other erosion control BMPs protect against concentrated surface water flow by spreading out the flow and reducing flow velocity. This project will incorporate erosion control measures identified on the Erosion Control Plans prepared by the Project Civil Engineer (see Appendix B).

This project will implement the following erosion control during grading and construction:

- Apply temporary erosion control to any disturbed areas as required by the California Stormwater BMP Handbook-Construction, and the contract documents. Reapply as necessary to maintain effectiveness.

- Apply soil binder/polyacrylamide to areas of bare ground on the lots which are disturbed but will remain inactive for 14 days or more (as required by the CGP). Treated areas should be blocked off from vehicular traffic until such time as construction is resumed in the non-active areas.

- Implement temporary erosion control measures at regular intervals throughout the defined rainy season to achieve and maintain the contract's disturbed soil area requirements. Implement erosion control prior to the defined rainy season.

- Provide erosion control or cover temporary stockpiles.

- Stabilize non-active areas as soon as feasible after the cessation of construction activities.

- Control erosion in concentrated flow paths by applying erosion control blankets, sand bags, straw waddles, and lining swales as required.

- At completion of construction, apply permanent landscaping and/or wood chips to all remaining disturbed soil areas.

Sufficient quantities of temporary soil stabilization materials, primarily sand bags, will be maintained on-site and/or available to be brought to the site as needed to allow implementation as described in this SWPPP. This includes implementation requirements for active areas, non-active areas, and areas that require deployment before the onset of rain.

Implementation and locations of temporary soil stabilization BMPs are shown on the Erosion Control Plans by the Project Civil Engineer in Appendix B. The BMP Consideration Checklist in Appendix G identifies the erosion control BMPs selected for this project and are summarized below:

- EC-1, Scheduling
- EC-5, Soil Binders- (for dust control and temporary stabilization of disturbed areas)
- EC-7, Geotextiles and Mats -or Visqueen for temporary stockpiles or local erosion control
- EC-8, Wood Mulching (possibly in planter and landscaped areas)
- EC-13, Polyacrylamide (or EC-5 above)

Implementation of Erosion Control BMPs

Erosion Control BMPs will be implemented in a sequence to follow grading and construction. As the locations of soil disturbance change, erosion and sediment controls will be adjusted accordingly to control the downgrade perimeter and storm drain inlets. BMPs will be mobilized as follows:

Year Round

- The Owner, Contractor, or designated Qualified SWPPP Practitioner (QSP) shall monitor weather using National Weather Service reports to track conditions and alert crews to the onset of rainfall events. A QSP or trained employee under the supervision of the QSP shall inspect the site erosion control BMPs at least 48 hours in advance of a predicted storm having a 50% chance or greater of occurring in the 5-day NOAA weather forecast..

- The Site Superintendent and/or designated employee shall conduct routine weekly SWPPP site inspections of erosion and sediment control BMPs and record his observations on a Site Inspection Checklist.
- Disturbed soil areas will be stabilized with temporary erosion control or with permanent erosion control as soon as possible after grading or construction is complete.
- Temporary stockpiles and disturbed ground areas of the site which will remain inactive for 14 days or more shall be provided with temporary erosion and dust control BMPs, even in the dry season as required by the General Permit.

During the rainy season (October 1 through April 15):

- Disturbed areas shall be stabilized with temporary or permanent erosion control before rain events.
- Disturbed areas that are substantially complete should be stabilized with permanent landscaping as soon as possible following completion of ground-disturbing activities in any given area.
- Prior to forecast storm events, temporary erosion control BMPs will be implemented and inspected.
- Chemical Soil binders (polyacrylamide) will be used to temporarily stabilize areas that will be re-disturbed at a later time. Soil binders can also be used to stabilize soil stockpiles if the stockpiles are expected to remain in place undisturbed for an extended period of time. Temporary stockpiles of short duration may be covered with sheet plastic or geotextile material.
- Straw Mulch or "Straw and Tack" can be used by itself to provide temporary disturbed ground coverage or can be combined with hydroseeding to provide more permanent protection in lieu of the proposed soil binder for disturbed pad areas which will remain inactive for periods of 14 days or greater.

Sediment Control

Sediment controls are structural measures that are intended to complement and enhance the selected soil stabilization (erosion control) measures. Sediment controls are designed to intercept and settle out soil particles that have been detached and transported by the force of water. This project will incorporate temporary sediment control measures selected by the Owner/Developer/Contractor. The temporary sediment control BMPs selected are intended to minimize a net increase of sediment in storm water discharge relative to pre-construction levels.

Sufficient quantities of temporary sediment control materials will be maintained on-site throughout the duration of the project, to allow implementation of temporary sediment controls in the event of predicted rain, and for rapid response to failures or emergencies, as described in this SWPPP. This includes implementation requirements for active areas and non-active areas before the onset of rain.

Implementation and locations of temporary sediment control BMPs are shown on the SWPPP and Erosion Control Plans in Appendix B. The BMP Consideration Checklist in Appendix G indicates all the BMPs that will be implemented to control sediment on the construction site; these are:

- SE-1, Silt Fence (if necessary around stockpile and/or grading areas in lieu of sand bags)
- SE-5, Fiber Rolls (as necessary surrounding stockpiles and storage areas)
- SE-7, Street Sweeping and Vacuuming
- SE-8, Sandbag Barrier (around catch basin inlets and down gradient of graded areas adjoining existing pavement)
- SE-10, Storm Drain Inlet Protection

Implementation of Temporary Sediment Controls

- Temporary sediment control BMPs will generally be implemented on a schedule similar to erosion control during the wet season, except that street sweeping should be conducted on a regular basis even during the dry season if visible tracking from the site or sediment from slopes and other ground disturbance activity is observed on paved streets.
- During the rainy season, temporary sediment controls will be implemented at the draining perimeter of disturbed soil areas, at the toe of slopes, at storm drain inlets and at outfall areas at all times.
- During the non-rainy season, temporary sediment controls will be implemented at the draining perimeter of disturbed soil areas and at storm drains downstream from disturbed areas before predicted rain events.
- During the non-rainy season, in the event of a predicted storm, the following temporary sediment control materials should be maintained on-site: silt fence materials (optional), sandbags for linear barriers, Visqueen sheeting (for stockpiles) and fiber rolls (optional).

Tracking Control

The following BMPs have been selected to reduce sediment tracking from the construction site onto paved private or public roads:

- SE-7, Street Sweeping and Vacuuming
- Maintaining at least one of the existing two paved driveways during construction or provide TC-1, Stabilized Construction Entrance/Exit

Implementation of Stabilized Construction Entrance/Exit Implementation

- A stabilized construction entrance or at least one of the two paved driveways should be maintained for construction traffic as soon as existing asphalt has been removed for mass grading. Access to the concrete wash out area,

materials storage, and solid waste storage areas may also require stabilization until such time as the interior driveway and parking areas have been paved.

Street Sweeping and Vacuuming

- A program of street sweeping and vacuuming should be implemented to clean sediment from public streets. The program should be implemented for the duration of the project. The job entrance(s) at Palos Verdes Drive North should be monitored daily for visible signs of tracking.

Wind Erosion & Dust Control

The following BMPs have been selected to control dust from the construction site:

- WE-1, Wind Erosion Control
- WM-3, Stockpile Management

Implementation of Dust Control BMPs

- BMP WE-1, Wind Erosion Control, and BMP NS-1, Water Conservation Practices, will be implemented to provide dust control and prevent discharges from dust control activities and water supply equipment. Water application rates will be minimized as necessary to prevent runoff and ponding and water equipment leaks will be repaired immediately.
- During windy conditions (forecast or actual wind conditions of approximately 25 mph or greater), dust control will be applied to disturbed areas to adequately control wind erosion.
- BMP WM-3, Stockpile Management, will be implemented to prevent wind dispersal of sediment from stockpiles.

3.3 Non-Stormwater, Waste Management and Materials Pollution Control

An inventory of construction activities and potential non-storm water discharges is provided in Sections 2.5 and 2.6. The BMP Consideration Checklist in Appendix G and the list below indicates the BMPs that have been selected to control non-storm water pollution on the construction site. Implementation and locations of some non-storm water control BMPs are shown on the SWPPP and Erosion Control Plans in Appendix B. A narrative description of each BMP follows:

- NS-1, Water Conservation Practices
- NS-3, Paving and Grinding Operations
- NS-6, Illicit Connection /Illegal Discharge Detection and Reporting
- NS-7, Potable Water/Irrigation
- NS-8, Vehicle and Equipment Cleaning
- NS-9, Vehicle and Equipment Fueling
- NS-10, Vehicle and Equipment Maintenance
- NS-12, Concrete Curing (if used)
- NS-13, Concrete Finishing (if used)

Water Conservation Practices

- NS-1, Water Conservation Practices will be implemented to prevent non-storm water discharges.

Paving Operations

- Paving operations on the site will include AC paving of the private street and rolled curbs, and concrete paving of curbs, concrete drainage ribbons, and flatwork.
- NS-3, Paving and Grinding Operations, will be implemented to prevent paving materials from being discharged offsite.

Illicit Connection/Illegal Discharge Detection and Reporting

- NS-6, Illicit Connection/Illegal Discharge Detection and Reporting throughout the duration of the project will be implemented by the contractor.

Potable Water/Irrigation

- NS-7, Potable Water/Irrigation will be utilized to prevent discharges of pollutants due to irrigation/water line flushing.

Vehicle and Equipment Operations

- A variety of vehicles and equipment will be used on-site throughout the project, including loaders, stucco equipment, concrete trucks, material trucks and trailers, backhoes/excavators, forklifts, generators, compressors, and traffic control equipment.
- NS-9, Vehicle and Equipment Fueling, and NS-10, Vehicle and Equipment Maintenance will be utilized to prevent discharges of fuel and other vehicle fluids. Except for concrete washout, which is addressed in Section 500.3.9, vehicle cleaning will not be performed on-site.
- All self-propelled vehicles will be fueled off-site or in a designated fueling area. Fuel trucks will be used for all on-site fueling, whether at the designated fueling area or for mobile fueling elsewhere on the site. Each fuel truck should be equipped with absorbent spill clean-up materials,

<u>Waste Management and Materials Pollution Control</u>

An inventory of construction activities, materials, and wastes is provided in Sections 2.5 & 2.6. The BMP Consideration Checklist in Appendix G identifies the BMPs that have been selected to handle materials and control construction site wastes. A narrative description of each BMP follows.

- WM-1, Material Delivery and Storage
- WM-2, Material Use

- WM-3, Stockpile Management
- WM-4, Spill Prevention and Control
- WM-5, Solid Waste Management
- WM-6, Hazardous Waste Management
- WM-8, Concrete Waste Management
- WM-9, Sanitary/Septic Waste Management

Material Delivery, Storage, and Use

- WM-1 and WM-2 will be implemented to help prevent discharge of pollutants derived from materials used or stored onsite. The location of the material storage areas is shown on the SWPPP Map.
- Most materials will be brought to the site by the various subcontractors as needed and on-site materials storage is expected to be minimal. If on-site materials storage becomes necessary, watertight shipping containers are recommended to store hand tools, small parts, paint, solvents, grease, etc. Larger items such as 55 gallon drums, and material stored on pallets should be covered with plastic and provided with sandbag barriers. Very large items such as framing materials and stockpiled lumber should be stored in the open on wood blocks to minimize storm water contact. As mentioned above, on-site materials storage for this project will be minimal.

Stockpile Management

- Soil and debris stockpiles for this project are anticipated to be minor. The number of soil and/or debris stockpiles should be minimized to a single convenient central location such as the area labeled "Stockpile Management Area" shown on the SWPPP Map. The location of the temporary stockpiles can be relocated on the site as necessary, but the location should be accordingly revised on the SWPPP Map and all subcontractors handling these materials should be informed. BMP WM-3, Stockpile Management, will

be implemented to mitigate the potential for pollution of storm water from stockpiles of soil and paving materials such as Portland cement concrete (PCC) rubble, asphalt concrete (AC), asphalt concrete rubble, aggregate base, aggregate subbase, pre-mixed aggregate, and asphalt minder (so called "cold mix" asphalt). Stockpiles will be surrounded with sediment controls (SE-5, Fiber Rolls or SE-8, Sandbag Barrier). Either soil binders (EC-5 or EC-13) or plastic covers (EC-7, Geotextiles and Mats) will be used to prevent wind erosion.

Spill Prevention and Control

- WM-4, Spill Prevention and Control, will be implemented to contain and clean-up spills and prevent material discharges to the storm drain system.
- A designated minimum size 30-gallon metal waste receptacle, broom, shovel, and dry sweep compound for use in cleaning up minor spills of fuel, hydraulic fluids, oil, and other liquid hazardous materials will be kept in the construction site trailer for use in cleaning up minor spills and equipment leaks. Materials cleaned up in this manner will require proper disposal in accordance with local regulations depending on the types of materials spilled.

Waste Management

- WM-5, Solid Waste Management, and BMP WM-6, Hazardous Waste Management will be implemented to minimize storm water contact with waste materials and prevent waste discharges. Solid wastes will be loaded directly into trucks for off-site disposal whenever possible. When on-site storage is necessary, solid wastes will be stored in watertight dumpsters in the material storage area. Dumpster locations are shown on the SWPPP Map. AC and PCC rubble will be stockpiled in the material storage area and provided with sediment controls (SE-5, SE-8, EC-7, WE-1). Solid waste, including rubble stockpiles, will be removed and disposed off-site at least weekly. Hazardous

wastes will be stored in the shipping containers discussed in the Materials Delivery, Storage, and Use section above. Hazardous wastes will be stored in appropriate and clearly marked containers separated from other non-waste materials.

Concrete, Stucco, Plaster and Paint Residuals and Washout Wastes

- This project will involve the placement of concrete for building slabs, walls, foundations, and flatwork areas. Concrete wash-out wastes will consist of rinse water and residual concrete (Portland cement, aggregates, admixture, and water). BMP WM-8, Concrete Waste Management will be used to mitigate the discharge of concrete waste into the storm drain system. In addition to concrete use operations, stucco and plaster applications also create residual wastes that need to be managed and contained. All stucco mixing equipment should be located off the street when possible and placed on a plastic or visqueen liner. A sandbag or fiber roll berm should also be constructed around the equipment to contain spills and the wastes generated during operation. A central concrete washout pit as is shown on the SWPPP Map is recommended, however smaller washout pits and/or "eco-pans" may be used for tool and other equipment cleaning closer to areas where stucco, plaster and paint applications are occurring. **NO WASHOUT ON THE DIRT IS PERMITTED**. When not in use, all mixing equipment, paint containers and bagged products should be covered. BMP EC-1, Scheduling will be used to insure that concrete pours and other material applications will not be conducted during or immediately prior to rainfall events.

Sanitary/Septic Waste Management

- WM-9, Sanitary/Septic Waste Management will be implemented to prevent discharge of Septic Waste. All portable toilets shall be provided with a drip

pan and placed at least 10 feet away from paved surfaces to prevent the discharge of septic waste and disinfectants.

3.4 Post-Construction Stormwater Management Measures

The following are the post-construction BMPs that are to be used at this construction site after all construction is complete:

- Two flow through type planter boxes designed by the Project Civil Engineer to biofilter low flow stormwater.
- Approximately 19,000 sq ft of Grasspave surface by Invisible Products, Inc. will be utilized for parking areas. Grasspave is a high strength cellular geotextile material placed over a gravel base which permits permeability and reduces storm runoff. These areas may be planted with grass yet provides the strength required for light traffic and vehicle parking.
- The overall imperviousness of the construction site area will be reduced by approximately 3% using the post-construction BMPs (ref: RT Quinn Grading Plan)

4.0 BMP Inspection, Maintenance, and Rain Event Action Plans

4.1 BMP Inspection and Maintenance

The general permit requires permittees to conduct regular inspections of SWPPP and Erosion Control BMPs. The required frequency of BMPs is somewhat dependant on the type of BMP implemented. As a minimum, ***the General Permit requires routine weekly inspections*** and ***daily inspections during rain events*** of all BMPs for all Risk Levels (General Permit Attachments C, D, E; Section G.2). However, some BMPs may require daily monitoring (i.e. tracking controls, concrete wash-out pits, portable toilets, etc.). BMPs must be maintained regularly based on

permit-required inspection and observations during the course of normal construction activities. Prior to the start of construction, the Owner shall assign a person trained in SWPPP and Erosion Control BMPs to conduct the regular site inspections. The name of the person(s) responsible for the site inspections should be included in the Responsible Parties and Operators list in Section 6 below.

A blank copy of the Visual Site Inspection Log and a blank copy of the more detailed Construction Site Self-Inspection Checklist to be used for this project are included in Appendix I. These forms should be completed during each site SWPPP inspection. Completed inspection forms should be attached to Appendix I or in an accompanying file/binder that is referenced in the SWPPP and readily accessible on the site.

4.2 Rain Event Action Plans (REAP)

Risk Level 1 projects do not require preparation of a REAP.

5.0 Training

The General permit requires that all elements of the SWPPP be developed by a Qualified SWPPP Developer (QSD) and implemented by a Qualified SWPPP Practitioner (QSP). The QSP may delegate tasks to trained employees provided adequate supervision and oversight is provided.

Personnel at the site shall receive training appropriate for individual roles and responsibilities on the project. For example the concrete contractor should be trained in use and implementation of BMP WM-8, Concrete Waste Management, NS-12, Concrete Curing, WM-1, Material Delivery and Storage, and NS-13 Concrete

Finishing (also applies to stucco contractor). Appropriate personnel assigned to conduct site SWPPP inspections shall receive training on SWPPP implementation, BMP inspection and maintenance, and record keeping.

Sampling personnel should be trained in "clean sampling" techniques and should be trained to collect, maintain, and ship water quality samples in accordance with the *Surface Water Ambient Monitoring Program (SWAMP) 2008 Quality Assurance Program Plan.*

Sampling personnel using field instruments for pH and turbidity testing should be trained in sampling and instrument calibration in accordance with the manufacturer's recommendations and product manuals.

All training activities (formal and informal) for all personnel, contractors, and subcontractors shall be documented and a written record of the training activities shall be kept in the SWPPP in Appendix K. Training documentation must also be submitted in the Annual Report.

6.0 Responsible Parties and Operators

6.1 Responsible Parties

The General Permit requires (Section VII.B.4) that the name of the Legally Responsible Person and the name of any Approved Signatory be listed in the SWPPP. If an Approved Signatory is designated, a copy of the written agreement or other mechanism (i.e. registration of the Approved Signatory by the LRP into the SMARTS database) that provides this authority from the LRP be provided in the SWPPP.

Additions or changes to the Responsibilities should be recorded in the SWPPP in Appendix L.

Legally Responsible Person (LRP)

Mr. Craig Knickerbocker
Knickerbocker & Associates
827 Deep Valley Drive #100
Rolling Hills Estates, CA 90274

Phone (310) 541-9022
Email: cknickerbocker@knickerbockerassoc.com

Site Superintendent

Mr. Craig Knickerbocker
Knickerbocker & Associates
827 Deep Valley Drive #100
Rolling Hills Estates, CA 90274

Phone (310) 541-9022
Email: cknickerbocker@knickerbockerassoc.com

Project Civil Engineer & Survey

Mr. Bob Quinn
R.T. Quinn & Associates
1907 Border Ave
Torrance, CA 90501

Phone: (310) 320-4125

Qualified SWPPP Developer (QSD)

Joseph A. Cota
Earth Resources Inc.
18302 Sierra Hwy #102
Santa Clarita, CA 91351

Phone: (800) 554-3205

Cell: (661) 714-5598
Email: joe@radiusmaps.net

Qualified SWPPP Practitioner (QSP)

To be determined prior to the start of grading and construction

6.2 Contractor List

The General Permit requires (Section VII.B.5) that the SWPPP include a list of names or all contractors, subcontractors, and individuals who will be directed by the QSP.

General Contractor/Developer

Mr. Craig Knickerbocker
Knickerbocker & Associates
827 Deep Valley Drive #100
Rolling Hills Estates, CA 90274

Phone (310) 541-9022
Email: cknickerbocker@knickerbockerassoc.com

Note: Individual subcontractor information was not available at the time of preparation of this SWPPP and/or contracts for this project have not yet been awarded. A list of subcontractors for this project should be added to Appendix M as soon as it becomes available.

7.0 Construction Site Monitoring Program

7.1 Purpose

All dischargers subject to the General Permit shall develop and implement a written site-specific Construction Site Monitoring Program (CSMP). The CSMP shall include

all monitoring procedures and instructions, location maps, forms, and checklists as required by General Permit Attachments C, D, E; Section I.1.a prior to commencement of construction activities, dependant upon the Combined Risk Level of the project (i.e. Attachment C of the General Permit applies to Risk Level 1, Attachment D applies to Risk level 2, and Attachment E applies to Risk Level 3 projects).

7.2 Applicability of Permit Requirements

The major ground disturbing activities for this project associated with mass grading and storm drain construction have already been completed.

Requirements for Risk Level 1 projects are in Attachment C of the General Permit (included herein Appendix A of this SWPPP).

The following table from the CASQA BMP Handbook summarize the Risk Level 1 monitoring requirements:

Table D-2 Summary of Risk Level 1 Monitoring Requirements

Type of Monitoring		When
Sampling & Analysis	Non-visible pollutants: spill/BMP failure based on pollutant source assessment	Within first two hours of discharge from site. Collect samples of runoff affected by the spilled or released material(s) and runoff that is unaffected by the spilled or released material(s).
	Particle size	When sediment basins are used. If needed to justify site specific sediment risk using the Revised Universal Soil Loss Equation (RUSLE).
	Other	RWQCB or Total Maximum Daily Loads (TMDLs) may require other monitoring.
Visual Inspections	Non-stormwater inspection	Quarterly for each drainage area.
	Qualifying rain event: Pre-rain inspection	All drainage areas, BMPs, and stormwater containments within two business days of each qualifying rain event.
	Qualifying rain event: Post-rain inspection	All discharge locations within two business days after each qualifying rain event. Visually observe discharge of contained stormwater when discharged.
	During rain inspection	See BMP inspection below.
	BMP	Weekly and every 24 hours during extended storm events.

7.3 Monitoring Locations

Stormwater sampling for this project will only be required in the event there is visual evidence for the potential for non-visible pollutants to be present in site discharge. No mandatory sampling is required for Risk Level 1 projects.

Site drainage discharges to the storm drain catch basin at the south corner of the site. If sampling for non-visible pollutants becomes necessary, the samples should be collected at the discharge point as the water flows into the catch basin. The sample locations are shown on the SWPPP Map.

If sampling becomes necessary, background samples of water not impacted by potential pollutants from the construction site should also be collected for

comparison. Since there is no run-on water, the most likely place for collection of a background sample would be in the catch basin in the grass swale area between the bridal trail and the Palos Verdes Drive North, to the west of the westerly driveway.

All designated sample and background locations for this project are shown on the SWPPP Map in Appendix B.

Sampling Frequency

Mandatory sampling for pH and turbidity during qualifying storm events is not required for Risk Level 1 projects. The following table of monitoring (sampling) requirements by Risk Level is from the CGP:

Storm Water Effluent Monitoring Requirements by Risk Level

	Frequency	Effluent Monitoring (Section E, below)
Risk Level 1	when applicable	non-visible pollutant parameters (if applicable)
Risk Level 2	Minimum of 3 samples per day during qualifying rain event characterizing discharges associated with construction activity from the entire project disturbed area.	pH, turbidity, and non-visible pollutant parameters (if applicable)
Risk Level 3	Minimum of 3 samples per day during qualifying rain event characterizing discharges associated with construction activity from the entire project disturbed area.	If NEL exceeded: pH, turbidity and suspended sediment concentration (SSC)., Plus non-visible pollutant parameters if applicable

7.4 Safety

Stormwater sampling during a rain event poses potential hazards. Only personnel properly trained in sampling procedures should conduct sampling. In addition, the CGP requires sampling only during normally scheduled daylight working hours, and

only when hazardous weather conditions such as flooding or electrical storms are not present.

The following general discussion on safety hazards associated with stormwater sampling activities was modified from EPA's NPDES Storm Water Sampling Guidance Document dated July 1992. Some of these safety hazards are not applicable to this project.

Storm water sampling activities may occur when the sampling environment and/or stormwater discharges create hazardous conditions. Hazardous conditions associated with sampling include:

- Hazardous weather conditions (e.g., wind, lightning, flooding, etc.)
- Sampling in confined spaces (e.g., manholes)
- Hazards associated with chemicals
- Biological hazards (e.g., rodents and snakes)
- Physical hazards (e.g., traffic, falling objects, sharp edges, slippery footing, and the potential for lifting injuries from opening or removing access panels and manhole covers, etc.)

It is essential that sampling personnel be aware of these hazards. Sampling personnel should be trained to evaluate potentially hazardous situations and develop ways for handling them. Since sampling hazards can be life threatening, safety must be the highest priority for all personnel. This chapter outlines general health and safety issues and concerns. Additional references discussed below should be consulted for more specific guidance to avoid adverse health and safety situations.

General Training Requirements

Preparation and training of all sampling personnel should be completed before beginning any sampling task. Extreme care should be taken to allow for safety precautions including proper equipment and appropriate operational techniques, sufficient time to accomplish the task, training on potential hazards, and emergency procedures. EPA's Order 1440.2 sets out the policy, responsibilities, and mandatory requirements for the safety of personnel who are involved in sampling activities. This order, which is found within the EPA NPDES Compliance Monitoring Inspector Training: Sampling manual, provides further guidance to applicants' storm water sampling personnel. Basic emergency precautions include having access to both local emergency phone numbers and communication equipment (i.e., phones or radios), and ensuring that personnel are trained in frost aid and carry first aid equipment.

Additionally, the CGP requires that dischargers designate and train personnel to collect, maintain, and ship water quality samples in accordance with the Surface Water Ambient Monitoring Program (SWAMP) 2008 Quality Assurance Program Plan which is available at:
http://www.swrcb.ca.gov/water_issues/programs/swamp/tools.shtml#qa

Recommended Sampling and Safety Equipment

The following is a list of sampling and safety equipment that may be appropriate depending on the characteristics of the sampling site. Note that there will be NO CONFINED SPACE ENTRY SAMPLING; therefore equipment related to sampling in confined spaces is not included in this list.

- insect/rodent Repellant
- Hard Hat
- Safety Goggles

- Rain Wear and Boots
- Coveralls & High Visibility Safety Vest
- Gloves (disposable nitritle, non-powdered)
- Sampling bottles (with proper preservatives when necessary) and cooler for shipping
- Sampling extension pole and containers for collection of pH and turbidity samples
- Calibrated portable turbidimeter and pH meter
- First Aid Kit
- Reflective Vests

Hazardous Weather Conditions

Common sense should dictate whether sampling be conducted during adverse weather conditions. No sampling personnel should place themselves in danger during high winds, lightning storms, or flooding conditions which might be unsafe. This applies to safety while driving to and from the project site. There may be times where it is unsafe to drive a motor vehicle on the site. Under extreme conditions, a less hazardous storm event should be sampled.

Special Training Requirements

Sampling personnel can also be at risk of exposure to hazardous chemicals-either chemicals in the actual storm water discharge or the chemicals that have been placed in the sample collection containers for sample preservation. Therefore, direct contact with the preservatives and the storm water (if hazardous chemicals are suspected to be present) should be avoided. Sampling personnel should wear gloves and safety glasses to avoid skin and eye exposure to harmful chemicals. Sampling personnel should be trained to avoid exposure and instructed as to what to do if exposure occurs (e.g., flush the eyes, rinse the skin, ventilate the area, etc.).

Biological Hazards

Storm water sampling personnel may also encounter biological hazards such as rodents, snakes, and insects. The sampling crew should remain alert to these hazards. As listed above necessary sampling equipment, for certain locations should include insect/rodent repellant and a first aid kit.

Physical Hazards

The sampler should be aware of a number of physical hazards that could cause accidents at the sampling site. These hazards include traffic hazards, sharp edges, falling objects, slippery footing, and lifting injuries from removing manhole covers. Sampling personnel should pay close attention in order to prevent these safety hazards at all times.

If the sample point is in a storm drain, a street gutter, or ditch near the street, particular attention must be given to marking off the work area to warn oncoming traffic of the presence of the sampling crew. Traffic cones, warning signs, and barricades should be placed in appropriate places around the sampling point.

7.5 Visual Monitoring

Weekly visual BMP monitoring is required for a Risk Level 1 project throughout the duration of construction activities. The General Permit requires that the construction site be inspected within two days prior to a predicted qualifying rain event is predicted and within two days after the qualifying event. Daily visual monitoring is required during storm events during periods of active construction.

A qualifying rain event is defined as a storm that produces 0.5 inches or more precipitation within a 48-hour or greater period between rain events. A rain gauge should be kept on the site and a record of rainfall maintained by the QSP, or other

designated employee under the supervision of the QSP, throughout the duration of construction.

The purpose of the visual BMP monitoring is to identify BMPs that:

- Need maintenance to operate effectively;
- BMPs which have failed; and
- Identify MBPs which could fail to operate as intended.

If deficiencies are identified during BMP inspections, repairs or design changes must be initiated within 72 hours of identification and need to be completed as soon as possible.

All BMP inspections should be documented on site inspection checklists included in this SWPPP. The person responsible for conducting the monitoring should complete both the Visual Site Inspection Field Log and the Self Inspection Checklist included in Appendix I.

Records must be kept of all qualifying rain event inspections. Records need to be maintained on the site and document the following:

- Personnel performing the observations
- Observation dates (time and date)
- Weather conditions (including the rain gauge reading for the qualifying rain event
- Locations observed
- Corrective actions taken in response to observations

Non-Stormwater Discharges Inspections

The General Permit requires that construction sites, regardless of risk level, be ***inspected quarterly for the presence of non-stormwater discharges***. Records must be kept of all non-stormwater discharge inspections and must be maintained on site.

Non-stormwater discharge inspections are only required during normal business hours of the construction site. The purpose of these inspections is to detect unauthorized non-stormwater discharges and observe authorized non-stormwater discharges. Quarterly inspections must include each drainage area of the project and document the following:

- Presence or indications of unauthorized and authorized non-stormwater discharges and their sources;
- Pollutant characteristics of the non-stormwater discharge (floating and suspended material, sheen, discoloration, turbidity, odor, etc.;\
- Personnel performing the observations;
- Dates and approximate time each drainage area and non-stormwater discharge was observed; and
- Response taken to observations.

If the site is Risk level 2 or 3 and there are non-stormwater discharges, then samples must be collected and analyzed. An example of a Visual Inspection Field Log Sheet which can be used to be used to log both stormwater and non-stormwater discharge inspections is included in Appendix I. This form is more specific to discharges from the site and should not be confused with Construction Site Self Inspection Checklist, also included in Appendix I, which is intended to be used for monitoring site BMP conditions. Both forms should be used when conducting visual site inspections.

7.6 Water Quality Sampling and Analysis

All Risk Level 1, 2, and 3 sites are required to monitor runoff for non-visible pollutants in the event of a BMP failure, breach, or spill. An area unaffected by the failure, breach, or spill must also be sampled to serve as the basis for comparison.

Risk level 2 and 3 sites are required to collect:

- Samples of runoff and contained rainwater (when it is released) from qualifying storm events and analyze samples for pH and turbidity.
- Samples of non-stormwater (unauthorized and authorized) to characterize the discharge

The purpose of sampling is to determine whether BMPs implemented on a construction site are effective in controlling potential construction site pollutants, which come in contact with stormwater or non-stormwater, and to demonstrate compliance with the applicable NALs or NELs

Sample Collection Procedures

Grab Samples will be collected by placing a separate lab-provided sample container directly into the stream of water downgradient and within close proximity to the potential non-visible pollutant discharge location. The sample container will be used to collect the water which will then be transferred to sample bottles for laboratory analysis. Field pH and turbidity tests may be conducted directly in the sample collection bottle without transfer to separate containers. The upgradient and uncontaminated background samples shall be collected first prior to collecting the downgradient samples to minimize the cross-contamination potential. The sampling personnel will collect the water upgradient of where they are standing. The sampler shall wear new, non-powdered nitrile gloves during sampling. The collected water should then be transferred to a laboratory-provided sample container containing the

proper preservative for the analyte(s) being monitored. PH and turbidity require no preservatives.

To maintain sample integrity and prevent cross contamination, sampling collection personnel will:

- Wear a clean pair of non-powdered nitrile gloves prior to the collection and handling of each sample at each location.
- Not contaminate the inside of the sample bottle by not allowing it to come into contact with any material other than the water sample.
- Discard sample bottles or sample lids that have been dropped onto the ground prior to sample collection.
- Not leave the sample transportation cooler lid open for an extended period of time once samples are placed inside.
- Not sample near a running vehicle where exhaust fumes may impact the sample.
- Not touch the exposed end of a sampling tube, if applicable.
- Avoid allowing rainwater to drip from rain gear or other surfaces into sample bottles.
- Not eat, smoke, or drink during sample collection.
- Not sneeze or cough in the direction of an open sample bottle.
- Minimize the exposure of the samples to direct sunlight, as sunlight may cause biochemical transformation of the sample to take place.
- Decontaminate sampling equipment prior to sample collection using a TSP-soapy water wash, distilled water rinse, and final rense with distilled water.

Sample Handling Procedures

Immediately following collection, sample bottles for laboratory analytical testing will be capped, labeled, documented on a Chain of Custody form provided by the analytical laboratory (example CoC form in Appendix O), sealed in a re-sealable storage bag, placed in an ice-chilled cooler, at as near to 4 degrees Celsius as practicable, and delivered within 24 hours to the designated sampling laboratory.

Sample Bottle Identification labels

Sampling personnel will attach an identification label to each sample bottle and/or the laboratory-provided sample bottles will be pre-labeled with blank labels. At a minimum, the following information will be recorded on the label in waterproof ink, as appropriate:

- Project name
- Project number (or WDID #)
- Unique sample identification number and location
- Collection time and date

Sampling Activity Logs

A log of sampling events will identify:

- Project Name
- Project Number
- Sampling date
- Separate times for collected samples and QA/QC samples recorded to the nearest minute

- Unique sample identification number and location
- Analysis constituent
- Names of sampling personnel
- Weather conditions (including precipitation amount)
- Field analysis results

7.6.1 Sediment and Turbidity Sampling

Conditions or areas at a construction site that may cause sediment, silt, and/or turbidity in site discharge water include:

- Exposed soil areas having inadequate erosion control measures;
- Areas of active grading;
- Poorly stabilized slopes;
- Lack of perimeter sediment controls;
- Areas of concentrated flow on unprotected soils;
- Poorly maintained or failed erosion and sediment control measures;
- Tracking sediment onto roads and paved surfaces; and
- Unprotected soil stockpiles

Although not anticipated for this project, Turbidity sampling and analysis, if it becomes necessary, will be conducted in the field using a properly calibrated Hanna HI 98703 Portable Turbidimeter or equivalent.

7.6.2 PH Sampling

Conditions or areas of a construction site that may cause high pH in site discharges include:

- Concrete pours and curing;
- Concrete waste management areas;

- Mortar and stucco mixing, application, and waste management areas; and
- Soil amendments (i.e. fly ash and lime)

Although not anticipated, pH sampling and analysis, if it becomes necessary, will be conducted in the field using a properly calibrated Hanna HI 98127 Portable pH Meter or equivalent.

7.6.3 Non-Visible Pollutant Sampling

If a breached BMP is observed which has the potential to release non-visible pollutants, sampling of stormwater runoff will be required for the suspected pollutant(s) of concern. A table of potential pollutants from the construction materials to be used on this site and the EPA test method, container type and preservative to be used for each analyte is presented in Appendix O.

The QSP, or Site Superintendent if the QSP is not present on the site, shall notify the Designated Sample Collection firm when a breached BMP requiring stormwater sampling has occurred. The designated sample collection firm and designated testing laboratory are listed below:

Designated Sample Collection
To be determined

Designated Testing Laboratory
To be determined

7.7 Watershed Monitoring Option

Off-site watershed or receiving water monitoring is not required for this project.

7.8 Quality Assurance and Quality Control

For an initial verification of laboratory or field analysis, duplicate samples will be collected at a rate of 5% or 1 duplicate per sampling event. The duplicate sample will be collected, handled, and analyzed using the same protocols as primary samples. A duplicate sample will be collected at each location immediately after the primary sample has been collected. Duplicates will be collected where contamination is likely, not on the background sample. Duplicate samples will not influence any evaluations or conclusions; however, they will be used as a check on laboratory quality assurance.

To ensure proper handling, all samples, sample container type and size, preservatives used (if any), time and location of sample collection, EPA test method requested, and signature of the sampler on a copy of the chain-of-custody form included in Appendix O.

Data Management and Reporting

A copy of all water quality analytical results and QA/QC data will be submitted to the Owner/Developer immediately (for field analyses) and within 5 days (for laboratory analyses).

Lab reports and COCs will be reviewed for consistency between lab methods, sample identifications, dates, and times for both primary samples and QA/QC samples. All data, including COC forms and Sampling Activity Logs, shall be kept with the SWPPP.

Data Evaluation

An evaluation of the water quality sample analytical results, including figures with sample locations, will be submitted to the Owner/Developer with the water quality analytical results and the QA/QC data.

If the runoff/downgradient sample shows an increased level of the tested analyte relative to the background sample, the BMPs, site conditions, and surrounding influences will be assessed to determine the probable cause of the increase. As determined by the site and data evaluation, appropriate BMPs will be repaired or modified to mitigate discharges of non-visual pollutant concentrations. Any revisions to the BMPs will be recorded as an amendment to the SWPPP.

7.9 Reporting Requirements

All dischargers are required to prepare and electronically submit an Annual Report no later than September 1 each year. The Annual Reports must be certified in accordance with the Special Provisions in the General Permit. The Annual Report must include the following stormwater monitoring information:

- A summary and evaluation of all sampling and analysis results, including original laboratory reports
- A summary of Quarterly Non-Stormwater site inspections and sample results
- The analytical methods(s), reporting units, and MDLs for each analytical parameter
- A summary of all corrective actions taken during the compliance year
- Identification of any compliance activities or corrective actions that were not implemented and reasons for not implementing them
- A summary of all violations of the General Permit

- The individual(s) who performed facility inspections, sampling, visual observation (inspections), and/or measurements including precipitation (rain gauge readings)
- The visual observations and sample collection exception records and reports
- Certification that employees and subcontractors have been provided with SWPPP training and that written records are maintained by the LRP.

7.9.1 NAL Exceedance Reporting

For this Risk Level 1 project, field monitoring during qualifying rain events is not required to verify compliance with NALs.

The CGP Findings, Section 1.H. 56 & 57, sets a Numeric Action Level (NAL) for **pH of 6.5 to 8.5** and for **turbidity 250 NTU** to provide operational information regarding the performance of BMPs used to minimize discharge of pollutants from the construction site. Monitoring results are reported in the annual report.
However, NAL exceedances must be reported to the State Water Boards SMARTS system, and the discharger is required to provide an NAL Exceedance Report when requested by a Regional Water Board.

It is important to note that the CGP states that exceedance of an NAL does not itself constitute a violation of the General Permit but *failure of the discharger to take corrective action may constitute a violation.*

SWRCB refers to the self-reporting of NAL exceedances in the SMARTS system as "ad hoc" reporting. SWRCB recently released (January 2011) instructions for ad hoc reporting of NAL exceedance. A copy of these instructions is presented in Appendix D.

7.10 Records Retention

Permittees must retain records for all stormwater monitoring information and copies of all reports, including the annual reports, for a period of at least three years from the date of submittal or longer if required by the RWQCB. ATS dischargers (not applicable for this project) must retain all records for three years after the completion of the construction project. Records are to be kept on site while construction is ongoing. These records include:

- The date, place, and time of the facility inspections, sampling, visual observations, and rainfall data
- The individuals who performed facility inspections and sampling
- The date and time of sampling and analyses
- A summary of all analytical results
- QA/QC records and results
- Non-stormwater discharge inspections and visual site inspection checklists
- Copies of any state or local violations
- Records for all corrective actions and follow-up activities that resulted from visual inspections analytical results.

APPENDIX A

Construction General Permit

Linda S. Adams
Secretary for
Environmental Protection

State Water Resources Control Board

Division of Water Quality
1001 I Street • Sacramento, California 95814 • (916) 341-5455
Mailing Address: P.O. Box 100 • Sacramento, California • 95812-0100
Fax (916) 341-5463 • http://www.waterboards.ca.gov

Arnold Schwarzenegger
Governor

CONSTRUCTION GENERAL PERMIT FACT SHEET TABLE OF CONTENTS

I. BACKGROUND 1

A. History 1

B. Legal Challenges and Court Decisions 1

C. Blue Ribbon Panel of Experts and Feasibility of Numeric Effluent Limitations 3

D. Summary of Panel Findings on Construction Activities 4

E. How the Panel's Findings are Used in this General Permit 5

F. Summary of Significant Changes in This General Permit 5

II. RATIONALE 7

A. General Permit Approach 7

B. Construction Activities Covered 7

C. Construction Activities Not Covered 9

D. Obtaining and Terminating Permit Coverage 11

E. Discharge Prohibitions 12

F. Effluent Standards for All Types of Discharges 13

G. Receiving Water Limitations 20

H. Training Qualifications and Requirements 21

I. Sampling, Monitoring, Reporting and Record Keeping 21

J. Risk Determination 28

K. ATS Requirements 36

L. Post-Construction Requirements 37

M. Storm Water Pollution Prevention Plans 45

N. Regional Water Board Authorities 47

LIST OF TABLES

Table 1 - Regional Water Board Basin Plans, Water Quality Objectives for Turbidity 15
Table 2 - Results of Ecoregion Analysis 16
Table 3 – ACL Sampling Data taken by Regional Water Board Staff..... 17
Table 4 - Required Monitoring Elements for Risk Levels..... 21
Table 5 - Storm Water Effluent Monitoring Requirements by Risk Level 23
Table 6 - Receiving Water Monitoring Requirements 26
Table 7 - Combined Risk Level Matrix 30
Table 8 -National Oceanic and Atmospheric Administration (NOAA) Definition of Probability of Precipitation (PoP) 32
Table 9 - Qualified SWPPP Developer/ Qualified SWPPP Practitioner Certification Criteria..... 46

LIST OF FIGURES

Figure 1 -Statewide Map of K * LS..... 29
Figure 2 - Suite of Storm Events..... 38
Figure 3 - Northern CA (2009) Counties / Cities With SUSMP-Plus Coverage..... 39
Figure 4 - Southern CA (2009) Counties / Cities With SUSMP-Plus Coverage 40
Figure 5 - Schematic of the Lane Relationship..... 42
Figure 6 - Channel Changes Associated with Urbanization 43

I. BACKGROUND

A. History

In 1972, the Federal Water Pollution Control Act (also referred to as the Clean Water Act [CWA]) was amended to provide that the discharge of pollutants to waters of the United States from any point source is unlawful unless the discharge is in compliance with a National Pollutant Discharge Elimination System (NPDES) permit. The 1987 amendments to the CWA added Section 402(p), which establishes a framework for regulating municipal and industrial storm water discharges under the NPDES Program. On November 16, 1990, the U.S. Environmental Protection Agency (USEPA) published final regulations that established storm water permit application requirements for specified categories of industries. The regulations provide that discharges of storm water to waters of the United States from construction projects that encompass five or more acres of soil disturbance are effectively prohibited unless the discharge is in compliance with an NPDES Permit. Regulations (Phase II Rule) that became final on December 8, 1999 lowered the permitting threshold from five acres to one acre.

While federal regulations allow two permitting options for storm water discharges (Individual Permits and General Permits), the State Water Board has elected to adopt only one statewide General Permit at this time that will apply to most storm water discharges associated with construction activity.

On August 19, 1999, the State Water Board reissued the General Construction Storm Water Permit (Water Quality Order 99-08-DWQ). On December 8, 1999 the State Water Board amended Order 99-08-DWQ to apply to sites as small as one acre.

The General Permit accompanying this fact sheet regulates storm water runoff from construction sites. Regulating many storm water discharges under one permit will greatly reduce the administrative burden associated with permitting individual storm water discharges. To obtain coverage under this General Permit, dischargers shall electronically file the Permit Registration Documents (PRDs), which includes a Notice of Intent (NOI), Storm Water Pollution Prevention Plan (SWPPP), and other compliance related documents required by this General Permit and mail the appropriate permit fee to the State Water Board. It is expected that as the storm water program develops, the Regional Water Quality Control Boards (Regional Water Boards) may issue General Permits or Individual Permits containing more specific permit provisions. When this occurs, this General Permit will no longer regulate those dischargers.

B. Legal Challenges and Court Decisions

1. Early Court Decisions

Shortly after the passage of the CWA, the USEPA promulgated regulations exempting most storm water discharges from the NPDES permit requirements. (See 40 C.F.R. § 125.4 (1975); see also *Natural Resources Defense Council v. Costle* (D.C. Cir. 1977) 568 F.2d 1369, 1372 (*Costle*); *Defenders of Wildlife v. Browner* (9th Cir. 1999) 191 F.3d 1159, 1163 (*Defenders of Wildlife*).) When environmental groups challenged this exemption in federal court, the District of Columbia Court of Appeals invalidated the regulation, holding that the USEPA "does not have authority to exempt categories of point sources from the permit requirements of [CWA] § 402." (*Costle*, 568 F.2d at 1377.) The *Costle* court rejected the USEPA's argument that effluent-based storm sewer regulation was administratively infeasible because of the variable nature of storm water pollution and the number of affected storm sewers throughout the country. (*Id.* at 1377-82.) Although the court acknowledged the practical problems relating to storm sewer regulation, the court found the USEPA had the flexibility under the CWA to design regulations that would overcome these problems. (*Id.* at 1379-83.) In particular, the court pointed to general permits and permits based on requiring best management practices (BMPs).

During the next 15 years, the USEPA made numerous attempts to reconcile the statutory requirement of point source regulation with the practical problem of regulating possibly millions of diverse point source discharges of storm water. (See *Defenders of Wildlife*, 191 F.3d at 1163; see also Gallagher, Clean Water Act in Environmental Law Handbook (Sullivan, edit., 2003)
p. 300 (Environmental Law Handbook); Eisen, *Toward a Sustainable Urbanism: Lessons from Federal Regulation of Urban Storm Water Runoff* (1995) 48 Wash. U.J. Urb. & Contemp. L.1, 40-41 [Regulation of Urban Storm Water Runoff].)

In 1987, Congress amended the CWA to require NPDES permits for storm water discharges. (See CWA § 402(p), 33 U.S.C. § 1342(p); *Defenders of Wildlife,* 191 F.3d at 1163; *Natural Resources Defense Council v. USEPA* (9th Cir. 1992) 966 F.2d 1292, 1296.) In these amendments, enacted as part of the Water Quality Act of 1987, Congress distinguished between industrial and municipal storm water discharges. With respect to industrial storm water discharges, Congress provided that NPDES permits "shall meet all applicable provisions of this section and section 1311 [requiring the USEPA to establish effluent limitations under specific timetables]." (CWA § 402(p)(3)(A), 33 U.S.C. § 1342(p)(3)(A); see also *Defenders of Wildlife,* 191 F.3d at 1163-64.)

In 1990, USEPA adopted regulations specifying what activities were considered "industrial" and thus required discharges of storm water associated with those activities to obtain coverage under NPDES permits. (55 Fed. Reg. 47,990 (1990); 40 C.F.R. § 122.26(b)(14).) Construction activities, deemed a subset of the industrial activities category, must also be regulated by an NPDES permit. (40 C.F.R. § 122.26(b)(14)(x)). In 1999, USEPA issued regulations for "Phase II" of storm water regulation, which required most small construction sites (1-5 acres) to be regulated under the NPDES program. (64 Fed. Reg. 68,722; 40 C.F.R. § 122.26(b)(15)(i).)

2. Court Decisions on Public Participation

Two recent federal court opinions have vacated USEPA rules that denied meaningful public review of NPDES permit conditions. On January 14, 2003, the Ninth Circuit Court of Appeals held that certain aspects of USEPA's Phase II regulations governing MS4s were invalid primarily because the general permit did not contain express requirements for public participation. (*Environmental Defense Center v. USEPA* (9th Cir. 2003) 344 F.3d 832.) Specifically, the court determined that applications for general permit coverage (including the Notice of Intent (NOI) and Storm Water Management Program (SWMP)) must be made available to the public, the applications must be reviewed and determined to meet the applicable standard by the permitting authority before coverage commences, and there must be a process to accommodate public hearings. (*Id.* at 852-54.) Similarly, on February 28, 2005, the Second Circuit Court of Appeals held that the USEPA's confined animal feeding operation (CAFO) rule violated the CWA because it allowed dischargers to write their own nutrient management plans without public review. (*Waterkeeper Alliance v. USEPA* (2d Cir. 2005) 399 F.3d 486.) Although neither decision involved the issuance of construction storm water permits, the State Water Board's Office of Chief Counsel has recommended that the new General Permit address the courts' rulings where feasible[1].

---

[1] In *Texas Independent Producers and Royalty Owners Assn. v. USEPA* (7th Cir. 2005) 410 F.3d 964, the Seventh Circuit Court of Appeals held that the USEPA's construction general permit was not required to provide the public with the opportunity for a public hearing on the Notice of Intent or Storm Water Pollution Prevention Plan. The Seventh Circuit briefly discussed why it agreed with the Ninth Circuit's dissent in *Environmental Defense Center*, but generally did not discuss the substantive holdings in *Environmental Defense Center* and *Waterkeeper Alliance*, because neither court addressed the initial question of whether the plaintiffs had standing to challenge the permits at issue. However, notwithstanding the Seventh Circuit's decision, it is not binding or controlling on the State Water Board because California is located within the Ninth Circuit.

The CWA and the USEPA's regulations provide states with the discretion to formulate permit terms, including specifying best management practices (BMPs), to achieve strict compliance with federal technology-based and water quality-based standards. (*Natural Resources Defense Council v. USEPA* (9th Cir. 1992) 966 F.2d 1292, 1308.) Accordingly, this General Permit has developed specific BMPs as well as numeric action levels (NALs) and numeric effluent limitations (NELs) in order to achieve these minimum federal standards. In addition, the General Permit requires a SWPPP and REAP (another dynamic, site-specific plan) to be developed but has removed all language requiring the discharger to implement these plans – instead, the discharger is required to comply with specific requirements. By requiring the dischargers to implement these specific BMPs, NALs, and NELs, this General Permit ensures that the dischargers do not "write their own permits." As a result this General Permit does not require each discharger's SWPPP and REAP to be reviewed and approved by the Regional Water Boards.

This General Permit also requires dischargers to electronically file all permit-related compliance documents. These documents include, but are not limited to, NOIs, SWPPPs, annual reports, Notice of Terminations (NOTs), and numeric action level (NAL) exceedance reports. Electronically submitted compliance information is immediately available to the public, as well as the Regional Water Quality Control Board (Regional Water Board) offices, via the Internet. In addition, this General Permit enables public review and hearings on permit applications when appropriate. Under this General Permit, the public clearly has a meaningful opportunity to participate in the permitting process.

C. Blue Ribbon Panel of Experts and Feasibility of Numeric Effluent Limitations

In 2005 and 2006, the State Water Board convened an expert panel (panel) to address the feasibility of numeric effluent limitations (NELs) in California's storm water permits. Specifically, the panel was asked to address:

"Is it technically feasible to establish numeric effluent limitations, or some other quantifiable limit, for inclusion in storm water permits? How would such limitations or criteria be established, and what information and data would be required?"

"The answers should address industrial general permits, construction general permits, and area-wide municipal permits. The answers should also address both technology-based limitations or criteria and water quality-based limitations or criteria. In evaluating establishment of any objective criteria, the panel should address all of the following:

The ability of the State Water Board to establish appropriate objective limitations or criteria;

How compliance determinations would be made;

The ability of dischargers and inspectors to monitor for compliance; and

The technical and financial ability of dischargers to comply with the limitations or criteria."

Through a series of public participation processes (State Water Board meetings, State Water Board workshops, and the solicitation of written comments), a number of water quality, public process and overall program effectiveness problems were identified. Some of these problems are addressed through this General Permit.

D. Summary of Panel Findings on Construction Activities

The panel's final report can be downloaded and viewed through links at www.waterboards.ca.gov or by clicking here[2].

The panel made the following observations:

"Limited field studies indicate that traditional erosion and sediment controls are highly variable in performance, resulting in highly variable turbidity levels in the site discharge."

"Site-to-site variability in runoff turbidity from undeveloped sites can also be quite large in many areas of California, particularly in more arid regions with less natural vegetative cover and steep slopes."

"Active treatment technologies involving the use of polymers with relatively large storage systems now exist that can provide much more consistent and very low discharge turbidity. However, these technologies have as yet only been applied to larger construction sites, generally five acres or greater. Furthermore, toxicity has been observed at some locations, although at the vast majority of sites, toxicity has not occurred. There is also the potential for an accidental large release of such chemicals with their use."

"To date most of the construction permits have focused on TSS and turbidity, but have not addressed other, potentially significant pollutants such as phosphorus and an assortment of chemicals used at construction sites."

"Currently, there is no required training or certification program for contractors, preparers of soil erosion and sediment control Storm Water Pollution Prevention Plans, or field inspectors."

"The quality of storm water discharges from construction sites that effectively employ BMPs likely varies due to site conditions such as climate, soil, and topography."

"The States of Oregon and Washington have recently adopted similar concepts to the Action Levels described earlier."

In addition, the panel made the following conclusions:

"It is the consensus of the Panel that active treatment technologies make Numeric Limits technically feasible for pollutants commonly associated with storm water discharges from construction sites (e.g. TSS and turbidity) for larger construction sites. Technical practicalities and cost-effectiveness may make these technologies less feasible for smaller sites, including small drainages within a larger site, as these technologies have seen limited use at small construction sites. If chemical addition is not permitted, then Numeric Limits are not likely feasible."

"The Board should consider Numeric Limits or Action Levels for other pollutants of relevance to construction sites, but in particular pH. It is of particular concern where fresh concrete or wash water from cement mixers/equipment is exposed to storm water."

"The Board should consider the phased implementation of Numeric Limits and Action Levels, commensurate with the capacity of the dischargers and support industry to respond."

---

[2] http://www.waterboards.ca.gov/stormwtr/docs/numeric/swpanel_final_report.pdf

E. How the Panel's Findings are Used in this General Permit

The State Water Board carefully considered the findings of the panel and related public comments. The State Water Board also reviewed and considered the comments regarding statewide storm water policy and the reissuance of the Industrial General Permit. From the input received the State Water Board identified some permit and program performance gaps that are addressed in this General Permit. The Summary of Significant Changes (below) in this General Permit are a direct result of this process.

F. Summary of Significant Changes in This General Permit

The State Water Board has significant changes to Order 99-08-DWQ. This General Permit differs from Order 99-08-DWQ in the following significant ways:

Rainfall Erosivity Waiver: this General Permit includes the option allowing a small construction site (>1 and <5 acres) to self-certify if the rainfall erosivity value (R value) for their site's given location and time frame compute to be less than or equal to 5.

Technology-Based Numeric Action Levels: this General Permit includes NALs for pH and turbidity.

Technology-Based Numeric Effluent Limitations: this General Permit contains daily average NELs for pH during any construction phase where there is a high risk of pH discharge and daily average NELs turbidity for all discharges in Risk Level 3. The daily average NEL for turbidity is set at 500 NTU to represent the minimum technology that sites need to employ (to meet the traditional Best Available Technology Economically Achievable (BAT)/ Best Conventional Pollutant Control Technology (BCT) standard) and the traditional, numeric receiving water limitations for turbidity.

Risk-Based Permitting Approach: this General Permit establishes three levels of risk possible for a construction site. Risk is calculated in two parts: 1) Project Sediment Risk, and 2) Receiving Water Risk.

Minimum Requirements Specified: this General Permit imposes more minimum BMPs and requirements that were previously only required as elements of the SWPPP or were suggested by guidance.

Project Site Soil Characteristics Monitoring and Reporting: this General Permit provides the option for dischargers to monitor and report the soil characteristics at their project location. The primary purpose of this requirement is to provide better risk determination and eventually better program evaluation.

Effluent Monitoring and Reporting: this General Permit requires effluent monitoring and reporting for pH and turbidity in storm water discharges. The purpose of this monitoring is to determine compliance with the NELs and evaluate whether NALs included in this General Permit are exceeded.

Receiving Water Monitoring and Reporting: this General Permit requires some Risk Level 3 dischargers to monitor receiving waters and conduct bioassessments.

Post-Construction Storm Water Performance Standards: this General Permit specifies runoff reduction requirements for all sites not covered by a Phase I or Phase II MS4 NPDES permit, to avoid, minimize and/or mitigate post-construction storm water runoff impacts.

Rain Event Action Plan: this General Permit requires certain sites to develop and implement a Rain Event Action Plan (REAP) that must be designed to protect all exposed portions of the site within 48 hours prior to any likely precipitation event.

Annual Reporting: this General Permit requires all projects that are enrolled for more than one continuous three-month period to submit information and annually certify that their site is in compliance

with these requirements. The primary purpose of this requirement is to provide information needed for overall program evaluation and pubic information.

Certification/Training Requirements for Key Project Personnel: this General Permit requires that key personnel (e.g., SWPPP preparers, inspectors, etc.) have specific training or certifications to ensure their level of knowledge and skills are adequate to ensure their ability to design and evaluate project specifications that will comply with General Permit requirements.

Linear Underground/Overhead Projects: this General Permit includes requirements for all Linear Underground/Overhead Projects (LUPs).

II. RATIONALE

A. General Permit Approach

A general permit for construction activities is an appropriate permitting approach for the following reasons:

1. A general permit is an efficient method to establish the essential regulatory requirements for a broad range of construction activities under differing site conditions;

2. A general permit is the most efficient method to handle the large number of construction storm water permit applications;

3. The application process for coverage under a general permit is far less onerous than that for individual permit and hence more cost effective;

4. A general permit is consistent with USEPA's four-tier permitting strategy, the purpose of which is to use the flexibility provided by the CWA in designing a workable and efficient permitting system; and

5. A general permit is designed to provide coverage for a group of related facilities or operations of a specific industry type or group of industries. It is appropriate when the discharge characteristics are sufficiently similar, and a standard set of permit requirements can effectively provide environmental protection and comply with water quality standards for discharges. In most cases, the general permit will provide sufficient and appropriate management requirements to protect the quality of receiving waters from discharges of storm water from construction sites.

There may be instances where a general permit is not appropriate for a specific construction project. A Regional Water Board may require any discharger otherwise covered under the General Permit to apply for and obtain an Individual Permit or apply for coverage under a more specific General Permit. The Regional Water Board must determine that this General Permit does not provide adequate assurance that water quality will be protected, or that there is a site-specific reason why an individual permit should be required.

B. Construction Activities Covered

1. **Construction activity subject to this General Permit:**

Any construction or demolition activity, including, but not limited to, clearing, grading, grubbing, or excavation, or any other activity that results in a land disturbance of equal to or greater than one acre.

Construction activity that results in land surface disturbances of less than one acre if the construction activity is part of a larger common plan of development or sale of one or more acres of disturbed land surface.

Construction activity related to residential, commercial, or industrial development on lands currently used for agriculture including, but not limited to, the construction of buildings related to agriculture that are considered industrial pursuant to USEPA regulations, such as dairy barns or food processing facilities.

Construction activity associated with LUPs including, but not limited to, those activities necessary for the installation of underground and overhead linear facilities (e.g., conduits, substructures, pipelines, towers, poles, cables, wires, connectors, switching, regulating and transforming equipment and associated ancillary facilities) and include, but are not limited to, underground utility mark-out, potholing, concrete

and asphalt cutting and removal, trenching, excavation, boring and drilling, access road and pole/tower pad and cable/wire pull station, substation construction, substructure installation, construction of tower footings and/or foundations, pole and tower installations, pipeline installations, welding, concrete and/or pavement repair or replacement, and stockpile/borrow locations.

Discharges of sediment from construction activities associated with oil and gas exploration, production, processing, or treatment operations or transmission facilities.[3]

Storm water discharges from dredge spoil placement that occur outside of U.S. Army Corps of Engineers jurisdiction[4] (upland sites) and that disturb one or more acres of land surface from construction activity are covered by this General Permit. Construction projects that intend to disturb one or more acres of land within the jurisdictional boundaries of a CWA § 404 permit should contact the appropriate Regional Water Board to determine whether this permit applies to the project.

2. Linear Underground/Overhead Projects (LUPs) subject to this General Permit:

Underground/overhead facilities typically constructed as LUPs include, but are not limited to, any conveyance, pipe, or pipeline for the transportation of any gaseous, liquid (including water, wastewater for domestic municipal services), liquescent, or slurry substance; any cable line or wire for the transmission of electrical energy; any cable line or wire for communications (e.g., telephone, telegraph, radio or television messages); and associated ancillary facilities. Construction activities associated with LUPs include, but are not limited to, those activities necessary for the installation of underground and overhead linear facilities (e.g., conduits, substructures, pipelines, towers, poles, cables, wires, connectors, switching, regulating and transforming equipment and associated ancillary facilities) and include, but are not limited to, underground utility mark-out, potholing, concrete and asphalt cutting and removal, trenching, excavation, boring and drilling, access road and pole/tower pad and cable/wire pull station, substation construction, substructure installation, construction of tower footings and/or foundations, pole and tower installations, pipeline installations, welding, concrete and/or pavement repair or replacement, and stockpile/borrow locations.

Water Quality Order 2003-0007-DWQ regulated construction activities associated with small LUPs that resulted in land disturbances greater than one acre, but less than five acres. These projects were considered non-traditional construction projects. Attachment A of this Order now regulates all construction activities from LUPs resulting in land disturbances greater than one acre.

3. Common Plan of Development or Sale

USEPA regulations include the term “common plan of development or sale” to ensure that acreage within a common project does not artificially escape the permit requirements because construction activities are phased, split among smaller parcels, or completed by different owners/developers. In the absence of an exact definition of “common plan of development or sale,” the State Water Board is required to exercise its regulatory discretion in providing a common sense interpretation of the term as it applies to construction projects and permit coverage. An overbroad interpretation of the term would render meaningless the clear “one acre” federal permitting threshold and would potentially trigger permitting of

---

[3] Pursuant to the Ninth Circuit Court of Appeals’ decision in *NRDC v. EPA* (9th Cir. 2008) 526 F.3d 591, and subsequent denial of the USEPA’s petition for reconsideration in November 2008, oil and gas construction activities discharging storm water contaminated only with sediment are no longer exempt from the NPDES program.

[4] A construction site that includes a dredge and/or fill discharge to any water of the United States (e.g., wetland, channel, pond, or marine water) requires a CWA Section 404 permit from the U.S. Army Corps of Engineers and a CWA Section 401 Water Quality Certification from the Regional Water Board or State Water Board.

almost any construction activity that occurs within an area that had previously received area-wide utility or road improvements.

Construction projects generally receive grading and/or building permits (Local Permits) from local authorities prior to initiating construction activity. These Local Permits spell out the scope of the project, the parcels involved, the type of construction approved, etc. Referring to the Local Permit helps define "common plan of development or sale." In cases such as tract home development, a Local Permit will include all phases of the construction project including rough grading, utility and road installation, and vertical construction. All construction activities approved in the Local Permit are part of the common plan and must remain under the General Permit until construction is completed. For custom home construction, Local Permits typically only approve vertical construction as the rough grading, utilities, and road improvements were already independently completed under the a previous Local Permit. In the case of a custom home site, the homeowner must submit plans and obtain a distinct and separate Local Permit from the local authority in order to proceed. It is not the intent of the State Water Board to require permitting for an individual homeowner building a custom home on a private lot of less than one acre if it is subject to a separate Local Permit. Similarly, the installation of a swimming pool, deck, or landscaping that disturbs less than one acre that was not part of any previous Local Permit are not required to be permitted.

The following are several examples of construction activity of less than one acre that would require permit coverage:

a. A landowner receives a building permit(s) to build tract homes on a 100-acre site split into 200 one-third acre parcels, (the remaining acreage consists of streets and parkways) which are sold to individual homeowners as they are completed. The landowner completes and sells all the parcels except for two. Although the remaining two parcels combined are less than one acre, the landowner must continue permit coverage for the two parcels.

b. One of the parcels discussed above is sold to another owner who intends to complete the construction as already approved in the Local Permit. The new landowner must file Permit Registration Documents (PRDs) to complete the construction even if the new landowner is required to obtain a separate Local Permit.

c. Landowner in (1) above purchases 50 additional one half-acre parcels adjacent to the original 200-acre project. The landowner seeks a Local Permit (or amendment to existing Local permit) to build on 20 parcels while leaving the remaining 30 parcels for future development. The landowner must amend PRDs to include the 20 parcels 14 days prior to commencement of construction activity on those parcels.

C. Construction Activities Not Covered

1. Traditional Construction Projects Not Covered

This General Permit does not apply to the following construction activity:

a. Routine maintenance to maintain original line and grade, hydraulic capacity, or original purpose of the facility.

b. Disturbances to land surfaces solely related to agricultural operations such as disking, harrowing, terracing and leveling, and soil preparation.

c. Discharges of storm water from areas on tribal lands; construction on tribal lands is regulated by a federal permit.

d. Discharges of storm water within the Lake Tahoe Hydrologic Unit. The Lahontan Regional Water Board has adopted its own permit to regulate storm water discharges from construction activity in the Lake Tahoe Hydrologic Unit (Regional Water Board 6SLT). Owners of construction projects in this watershed must apply for the Lahontan Regional Water Board permit rather than the statewide Construction General Permit. Construction projects within the Lahontan region must also comply with the Lahontan Region Project Guideline for Erosion Control (R6T-2005-0007 Section), which can be found at **http://www.waterboards.ca.gov/lahontan/Adopted_Orders/2005/r6t_2005_0007.pdf**

e. Construction activity that disturbs less than one acre of land surface, unless part of a larger common plan of development or the sale of one or more acres of disturbed land surface.

f. Construction activity covered by an individual NPDES Permit for storm water discharges.

g. Landfill construction activity that is subject to the Industrial General Permit.

h. Construction activity that discharges to Combined Sewer Systems.

i. Conveyances that discharge storm water runoff combined with municipal sewage.

j. Discharges of storm water identified in CWA § 402(*l*)(2), 33 U.S.C. § 1342(*l*)(2).

2. **Linear Projects Not Covered**

a. LUP construction activity does not include linear routine maintenance projects. Routine maintenance projects are projects associated with operations and maintenance activities that are conducted on existing lines and facilities and within existing right-of-way, easements, franchise agreements, or other legally binding agreements of the discharger. Routine maintenance projects include, but are not limited to projects that are conducted to:

i. Maintain the original purpose of the facility or hydraulic capacity.

ii. Update existing lines[5] and facilities to comply with applicable codes, standards, and regulations regardless if such projects result in increased capacity.

iii. Repairing leaks.

Routine maintenance does not include construction of new[6] lines or facilities resulting from compliance with applicable codes, standards, and regulations.

Routine maintenance projects do not include those areas of maintenance projects that are outside of an existing right-of-way, franchise, easements, or agreements. When a project must secure new areas,

---

[5]Update existing lines includes replacing existing lines with new materials or pipes.
[6]New lines are those that are not associated with existing facilities and are not part of a project to update or replace existing lines.

those areas may be subject to this General Permit based on the area of disturbed land outside the original right-of-way, easement, or agreement.

b. LUP construction activity does not include field activities associated with the planning and design of a project (e.g., activities associated with route selection).

c. Tie-ins conducted immediately adjacent to "energized" or "pressurized" facilities by the discharger are not considered construction activities where all other LUP construction activities associated with the tie-in are covered by an NOI and SWPPP of a third party or municipal agency.

3. **EPA's Small Construction Rainfall Erosivity Waiver**

EPA's Storm Water Phase II Final Rule provides the option for a Small Construction Rainfall Erosivity Waiver. This waiver applies to small construction sites between 1 and 5 acres, and allows permitting authorities to waive those sites that do not have adverse water quality impacts.

Dischargers eligible for this waiver are exempt from Construction General Permit Coverage. In order to obtain the waiver, the discharger must certify to the State Water Board that small construction activity will occur only when the rainfall erosivity factor is less than 5 ("R" in the Revised Universal Soil Loss Equation). The period of construction activity begins at initial earth disturbance and ends with final stabilization. Where vegetation will be used for final stabilization, the date of installation of a practice that provides interim non-vegetative stabilization can be used for the end of the construction period. The operator must agree (as a condition waiver eligibility) to periodically inspect and properly maintain the area until the criteria for final stabilization as defined in the General Permit have been met. If use of this interim stabilization eligibility condition was relied on to qualify for the waiver, signature on the waiver with a certification statement constitutes acceptance of and commitment to complete the final stabilization process. The discharger must submit a waiver certification to the State Board prior to commencing construction activities.

USEPA funded a cooperative agreement with Texas A&M University to develop an online rainfall erosivity calculator. Dischargers can access the calculator from EPA's website at: www.epa.gov/npdes/stormwater/cgp. Use of the calculator allows the discharger to determine potential eligibility for the rainfall erosivity waiver. It may also be useful in determining the time periods during which construction activity could be waived from permit coverage.

D. Obtaining and Terminating Permit Coverage

The appropriate Legally Responsible Person (LRP) must obtain coverage under this General Permit. To obtain coverage, the LRP or the LRP's Approved Signatory must file Permit Registration Documents (PRDs) prior to the commencement of construction activity. Failure to obtain coverage under this General Permit for storm water discharges to waters of the United States is a violation of the CWA and the California Water Code.

To obtain coverage under this General Permit, LRPs must electronically file the PRDs, which include a Notice of Intent (NOI), Storm Water Pollution Prevention Plan (SWPPP), and other documents required by this General Permit, and mail the appropriate permit fee to the State Water Board. It is expected that as the storm water program develops, the Regional Water Boards may issue General Permits or Individual Permits that contain more specific permit provisions. When this occurs, this General Permit will no longer regulate those dischargers that obtain coverage under Individual Permits.

Any information provided to the Regional Water Board shall comply with the Homeland Security Act and any other federal law that concerns security in the United States; any information that does not comply should not be submitted.

The application requirements of the General Permit establish a mechanism to clearly identify the responsible parties, locations, and scope of operations of dischargers covered by the General Permit and to document the discharger's knowledge of the General Permit's requirements.

This General Permit provides a grandfathering exception to existing dischargers subject to Water Quality Order No. 99-08-DWQ. Construction projects covered under Water Quality Order No. 99-08-DWQ shall obtain permit coverage at Risk Level 1. LUP projects covered under Water Quality Order No. 2003-0007-DWQ shall obtain permit coverage at LUP Type 1. The Regional Water Boards have the authority to require Risk Determination to be performed on projects currently covered under Water Quality Order No. 99-08-DWQ and 2003-0007-DWQ where they deem necessary.

LRPs must file a Notice of Termination (NOT) with the Regional Water Board when construction is complete and final stabilization has been reached or ownership has been transferred. The discharger must certify that all State and local requirements have been met in accordance with this General Permit. In order for construction to be found complete, the discharger must install post-construction storm water management measures and establish a long-term maintenance plan. This requirement is intended to ensure that the post-construction conditions at the project site do not cause or contribute to direct or indirect water quality impacts (i.e., pollution and/or hydromodification) upstream and downstream. Specifically, the discharger must demonstrate compliance with the post-construction standards set forth in this General Permit (Section XIII). The discharger is responsible for all compliance issues including all annual fees until the NOT has been filed and approved by the local Regional Water Board.

E. Discharge Prohibitions

This General Permit authorizes the discharge of storm water to surface waters from construction activities that result in the disturbance of one or more acres of land, provided that the discharger satisfies all permit conditions set forth in the Order. This General Permit prohibits the discharge of pollutants other than storm water and non-storm water discharges authorized by this General Permit or another NPDES permit. This General Permit also prohibits all discharges which contain a hazardous substance in excess of reportable quantities established in 40 C.F.R. §§ 117.3 and 302.4, unless a separate NPDES Permit has been issued to regulate those discharges. In addition, this General Permit incorporates discharge prohibitions contained in water quality control plans, as implemented by the nine Regional Water Boards. Discharges to Areas of Special Biological Significance (ASBS) are prohibited unless covered by an exception that the State Water Board has approved.

Non-storm water discharges include a wide variety of sources, including improper dumping, spills, or leakage from storage tanks or transfer areas. Non-storm water discharges may contribute significant pollutant loads to receiving waters. Measures to control spills, leakage, and dumping, and to prevent illicit connections during construction must be addressed through structural as well as non-structural BMPs. The State Water Board recognizes, however, that certain non-storm water discharges may be necessary for the completion of construction projects. Authorized non-storm water discharges may include those from de-chlorinated potable water sources such as: fire hydrant flushing, irrigation of vegetative erosion control measures, pipe flushing and testing, water to control dust, uncontaminated ground water dewatering, and other discharges not subject to a separate general NPDES permit adopted by a region. Therefore this General Permit authorizes such discharges provided they meet the following conditions.

These authorized non-storm water discharges must:

1. be infeasible to eliminate;
2. comply with BMPs as described in the SWPPP;
3. filter or treat, using appropriate technology, all dewatering discharges from sedimentation basins;

4. meet the NELs and NALs for pH and turbidity; and

5. not cause or contribute to a violation of water quality standards.

Additionally, authorized non-storm water discharges must not be used to clean up failed or inadequate construction or post-construction BMPs designed to keep materials onsite. Authorized non-storm water dewatering discharges may require a permit because some Regional Water Boards have adopted General Permits for dewatering discharges.

This General Permit prohibits the discharge of storm water that causes or threatens to cause pollution, contamination, or nuisance.

F. Effluent Standards for All Types of Discharges

1. Technology-Based Effluent Limitations

Permits for storm water discharges associated with construction activity must meet all applicable provisions of Sections 301 and 402 of the CWA. These provisions require controls of pollutant discharges that utilize best available technology economically achievable (BAT) for toxic pollutants and non conventional pollutants and best conventional pollutant control technology (BCT) for conventional pollutants. Additionally, these provisions require controls of pollutant discharges to reduce pollutants and any more stringent controls necessary to meet water quality standards. The USEPA has already established such limitations, known as effluent limitation guidelines (ELGs), for some industrial categories. This is not the case with construction discharges. In instances where there are no ELGs the permit writer is to use best professional judgment (BPJ) to establish requirements that the discharger must meet using BAT/BCT technology. This General Permit contains both narrative effluent limitations and new numeric effluent limitations for pH and turbidity, set using the best professional judgment (BPJ) equivalent to BAT and BCT (respectively).

BAT/BCT technologies not only include passive systems such as conventional runoff and sediment control, but also treatment systems such as coagulation/flocculation using sand filtration, when appropriate. Such technologies allow for effective treatment of soil particles less 0.02 mm (medium silt) in diameter. The discharger must install structural controls, as necessary, such as erosion and sediment controls that meet BAT and BCT to achieve compliance with water quality standards. The narrative effluent limitations constitute compliance with the requirements of the CWA.

The numeric effluent limitations for pH and turbidity are based upon BPJ, which authorizes the State Water Board to issue a permit containing “such conditions as the Administrator determines are necessary to carry out the provisions of this Chapter” (CWA § 402(a)(1), 33 U.S.C. § 1342(a)(1).) Because the USEPA has not yet issued an effluent limit guideline for storm water, the State Water Board must use BPJ to consider the appropriate technology for the category or class of point sources, based upon all available information and any unique factors relating to the sources. In addition, the permitting authority must consider a number of factors including the cost of achieving effluent reductions in relation to the effluent reduction benefits, the age of the equipment and facilities, the processes employed and any required process changes, engineering aspects of the control technologies, non-water quality environmental impacts (including energy requirements), and other such other factors as the State Water Board deems appropriate (CWA 304(b)(1)(B)).

Because the permit is an NPDES permit, there is no legal requirement to address the factors set forth in Water Code sections 13241 and 13263, unless the permit is more stringent than what federal law requires. (See *City of Burbank v. State Water Resources Control Bd.* (2005) 35 Cal.4th 613, 618, 627.) None of the requirements in this permit are more stringent than the minimum federal requirements, which include technology-based requirements achieving BAT/BCT and strict compliance with water quality standards. The inclusion of numeric effluent limitations (NELs) in the permit do not cause the permit to be

more stringent than current federal law. NELs and best management practices are simply two different methods of achieving the same federal requirement: strict compliance with state water quality standards. Federal law authorizes both narrative and numeric effluent limitations to meet state water quality standards. The use of NELs to achieve compliance with water quality standards is not a more stringent requirement than the use of BMPs. (State Water Board Order No. WQ 2006-0012 (*Boeing*).) Accordingly, the State Water Board does not need to take into account the factors in Water Code sections 13241 and 13263.

The State Water Board has concluded that the establishment of BAT/BCT will not create or aggravate other environmental problems through increases in air pollution, solid waste generation, or energy consumption. While there may be a slight increase in non-water quality impacts due to the implementation of additional monitoring or the construction of additional BMPs, these impacts will be negligible in comparison with the construction activities taking place on site and would be justified by the water quality benefits associated with compliance.

Considerations related to the processes employed and the changes necessitated by the adoption of the BAT/BCT effluent limits have been assessed throughout the stakeholder process (e.g., the Blue Ribbon Panel and the March 2007 preliminary draft) and are discussed in detail in Section I.C of this Fact Sheet. The following sections set forth the engineering aspects of the control technologies and the rationale for the determination of the numeric effluents for pH and turbidity.

In consideration of the costs for the establishment of BAT and BCT limits for pH and turbidity, existing requirements for the control of storm water pollution from construction sites have been established by USEPA and the previous Construction General Permit (State Water Board Order No. 99-08-DWQ) issued by the State Water Board. The General Permit establishes one, consistent set of performance standards for all levels and types of discharges (i.e., risk, linear utility, and ATS).The only difference is that for each level or type of discharge there may be more or less specific effluent limitations (e.g., the addition of numeric effluent limitations for turbidity applies to level/type 3 discharges). And the numeric effluent limitations themselves represent a minimum technology standard. In other words, the additional numeric effluent limitations, compared to the existing permit's narrative effluent limitations, do not increase compliance requirements; rather, they simply represent a point where one can quantitatively measure compliance with the lower end of the range of required technologies. Therefore, the compliance costs associated with the BAT/BCT numeric effluent limitations in this permit only differ by the costs required to measure compliance with the NELs when compared to the baseline compliance costs to comply with the limitations already established through EPA regulations and the existing Construction General Permit.

The State Water Board estimates these measurement costs to be approximately $1000 per construction site for the duration of the project. This represents the estimated cost of purchasing (or renting) monitoring equipment, in this case a turbidimeter (~$600) and a pH meter (~$400). In some cases the costs may be higher or lower. Costs could be lower if the discharger chooses to design and implement the project in a manner where effluent monitoring is likely to be avoided (e.g., no exposure during wet weather seasons, no discharge due to containment, etc.). Costs could be more if the project is subject to many effluent monitoring events or if the discharger exceeds NALs and/or NELs, resulting in additional monitoring requirements.

i. ***pH NEL***

Given the potential contaminants, the minimum standard method for control of pH in runoff requires the use of preventive measures such as avoiding concrete pours during rainy weather, covering concrete and directing flow away from fresh concrete if a pour occurs during rain, covering scrap drywall and stucco materials when stored outside and potentially exposed to rain, and other housekeeping measures. If necessary, pH-impaired storm water from construction sites can be treated in a filter or settling pond or basin, with additional natural or chemical treatment required to meet pH limits set forth in this permit. The basin or pond acts as a collection point and holds storm water for a sufficient period for the contaminants to be settled out, either naturally or artificially, and allows any additional treatment to take place. The State Water Board considers these techniques to be equivalent to BCT. In determining the pH

concentration limit for discharges, the State Water Board used BPJ to set these limitations.

The chosen limits were established by calculating three standard deviations above and below the mean pH of runoff from highway construction sites[7] in California. Proper implementation of BMPs should result in discharges that are within the range of 6.0 to 9.0 pH Units.

ii. *Turbidity NEL*

The Turbidity NEL of 500 NTU is a technology-based numeric effluent limitation and was developed using three different analyses aimed at finding the appropriate threshold to set the technology-based limit to ensure environmental protection, effluent quality and cost-effectiveness. The analyses fell into three, main types: (1) an ecoregion-specific dataset developed by Simon et. al. (2004) [8]; (2) Statewide Regional Water Quality Control Board enforcement data; and (3) published, peer-reviewed studies and reports on in-situ performance of best management practices in terms of erosion and sediment control on active construction sites.

A 1:3 relationship between turbidity (expressed as NTU) and suspended sediment concentration (expressed as mg/L) is assumed based on a review of suspended sediment and turbidity data from three gages used in the USGS National Water Quality Assessment Program:

USGS 11074000 SANTA ANA R BL PRADO DAM CA
USGS 11447650 SACRAMENTO R A FREEPORT CA
USGS 11303500 SAN JOAQUIN R NR VERNALIS CA

The turbidity NEL represents a feasible and cost effective performance standard that is demonstrated to be achievable. Although data has been collected to demonstrate that lower effluent levels may be achievable at some sites, staff cannot conclude at this time that a lower NEL is achievable within all the ecoregions of the state. The NEL represents staff determination that the NEL is the most practicable based on available data. The turbidity NEL represents a bridge between the narrative effluent limitations and receiving water limitations. The NEL limit may be considered an interim performance standard as additional data becomes available for evaluation during the next permit cycle. To support this NEL, State Water Board staff analyzed construction site discharge information (monitoring data, estimates) and receiving water monitoring information.

Since the turbidity NEL represents an appropriate threshold level expected at a site, compliance with this value does not necessarily represent compliance with either the narrative effluent limitations (as enforced through the BAT/BCT standard) or the receiving water limitations. In the San Diego region, some inland surface waters have a receiving water objective for turbidity equal to 20 NTU. Obviously a discharge up to, but not exceeding, the turbidity NEL of 500 NTU may still cause or contribute to the exceedance of the 20 NTU standard. Most of the waters of the State are protected by turbidity objectives based on background conditions**.**

Table 1 - Regional Water Board Basin Plans, Water Quality Objectives for Turbidity

REGIONAL WATER BOARD	WQ Objective	Background/Natural Turbidity	Maximum Increase
1	Based on background	All levels	20%

[7] Caltrans Construction Sites Runoff Characterization Study, 2002. Available at: http://www.dot.ca.gov/hq/env/stormwater/pdf/CTSW-RT-02-055.pdf.
[8] Simon, A., W.D. Dickerson, and A. Heins. 2004. Suspended-sediment transport rates at the 1.5-year recurrence interval for ecoregions of the United States: transport conditions at the bankfull and effective discharge. Geomorphology 58: pp. 243-262.

2	Based on background	> 50 NTU	10%
3	Based on background	0-50 JTU 50-100 JTU > 100 JTU	20% 10 NTU 10%
4	Based on background	0-50 NTU > 50 NTU	20% 10%
5	Based on background	0-5 NTU 5-50 NTU 50-100 NTU >100 NTU	1 NTU 20% 10 NTU 10%
6	Based on background	All levels	10%
7	Based on background	N/A	N/A
8	Based on background	0-50 NTU 50-100 NTU >100 NTU	20% 10 NTU 10%
9	Inland Surface Waters, 20 NTU All others, based on background	0-50 NTU 50-100 NTU >100 NTU	20% 10 NTU 10%

Table 2 shows the suspended sediment concentrations at the 1.5 year flow recurrence interval for the 12 ecoregions in California from Simon et. al (2004).

Table 2 - Results of Ecoregion Analysis

Ecoregion	Percent of California Land Area	Median Suspended Sediment Concentration (mg/L)
1	9.1	874
4	0.2	120
5	8.8	35.6
6	20.7	1530
7	7.7	122
8	3.0	47.4
9	9.4	284
13	5.2	143
14	21.7	5150
78	8.1	581
80	2.4	199
81	3.7	503
Area-weighted average		1633

If a 1:3 relationship between turbidity and suspended sediment is assumed, the median turbidity is 544 NTU.

The following table is composed of turbidity readings measured in NTUs from administrative civil liberty (ACL) actions for construction sites from 2003 - 2009. This data was derived from the complete listing of construction-related ACLs for the six year period. All ACLs were reviewed and those that included turbidimeter readings at the point of storm water discharge were selected for this dataset.

Table 3 – ACL Sampling Data taken by Regional Water Board Staff

WDID#	Region	Discharger	Turbidity (NTU)
5S34C331884	5S	Bradshaw Interceptor Section 6B	1800
5S05C325110	5S	Bridalwood Subdivision	1670
5S48C336297	5S	Cheyenne at Browns Valley	1629
5R32C314271	5R	Grizzly Ranch Construction	1400
6A090406008	6T	El Dorado County Department of Transportation, Angora Creek	97.4
5S03C346861	5S	TML Development, LLC	1600
6A31C325917	6T	Northstar Village	See Subdata Set

Subdata Set - Turbidity for point of storm water runoff discharge at Northstar Village

Date	Turbidity (NTU)	Location
10/5/2006	900	Middle Martis Creek
11/2/2006	190	Middle Martis Creek
01/04/2007	36	West Fork, West Martis Creek
02/08/2007	180	Middle Martis Creek
02/09/2007	130	Middle Martis Creek
02/09/2007	290	Middle Martis Creek
02/09/2007	100	West Fork, West Martis Creek
02/10/2007	28	Middle Martis Creek
02/10/2007	23	Middle Martis Creek
02/10/2007	32	Middle Martis Creek
02/10/2007	12	Middle Martis Creek
02/10/2007	60	West Fork, West Martis Creek
02/10/2007	34	West Fork, West Martis Creek

A 95% confidence interval for mean turbidity in an ACL order was constructed. The data set used was a small sample size, so the 500 NTU (the value derived as the NEL for this General Permit) needed to be verified as a possible population mean. In this case, the population refers to a hypothetical population of turbidity measurements of which our sample of 20 represents. A t-distribution was assumed due to the small sample size:

Mean: 512.23 NTU
Standard Deviation: 686.85
Margin of Error: 321.45
Confidence Interval: 190.78 NTU (Low)
833.68 NTU (High)

Based on a constructed 95% confidence interval, an ACL order turbidity measurement will be between 190.78 – 833.68 NTU. 500 NTU falls within this range. Using the same data set, a small-sample hypothesis test was also performed to test if the ACL turbidity data set contains enough information to cast doubt on choosing a 500 NTU as a mean. 500 NTU was again chosen due to its proposed use as an acceptable NEL value. The test was carried out using a 95% confidence interval. Results indicated that the ACL turbidity data set *does not* contain significant sample evidence to reject the claim of 500 NTU as an acceptable mean for the ACL turbidity population.

There are not many published, peer-reviewed studies and reports on in-situ performance of best management practices in terms of erosion and sediment control on active construction sites. The most often cited study is a report titled, "Improving the Cost Effectiveness of Highway Construction Site Erosion and Pollution Control" (Horner, Guedry, and Kortenhof 1990, http://www.wsdot.wa.gov/Research/Reports/200/200.1.htm). In a comment letter summarizing this report sent to the State Water Board, the primary author, Dr. Horner, states:

"The most effective erosion control product was wood fiber mulch applied at two different rates along with a bonding agent and grass seed in sufficient time before the tests to achieve germination. Plots treated in this way reduced influent turbidity by more than 97 percent and discharged effluent exhibiting mean and maximum turbidity values of 21 and 73 NTU, respectively. Some other mulch and blanket materials performed nearly as well. These tests demonstrated the control ability of widely available BMPs over a very broad range of erosion potential."

Other technologies studied in this report produced effluent quality at or near 100 NTU. It is the BPJ of the State Water Board staff that erosion control, while preferred, is not always an option on construction sites and that technology performance in a controlled study showing effluent quality directly leaving a BMP is always easier and cheaper to control than effluent being discharged from the project (edge of property, etc.). As a result, it is the BPJ of the State Water Board staff that it is not cost effective or feasible, at this time, for all risk level and type 3 sites in California to achieve effluent discharges with turbidity values that are less than 100 NTU.

To summarize, the analysis showed that: (1) results of the Simon et. al dataset reveals turbidity values in background receiving water in California's ecoregions range from 16 NTU to 1716 NTU (with a mean of 544 NTU); (2) based on a constructed 95% confidence interval, construction sites will be subject to administrative civil liability (ACL) when their turbidity measurement falls between 190.78 – 833.68 NTU; and (3) sites with highly controlled discharges employing and maintaining good erosion control practices can discharge effluent from the BMP with turbidity values less than 100 NTU. Therefore, the appropriate threshold to set the technology-based limit to ensure environmental protection, effluent quality, and cost-effectiveness ranges from 100 NTU to over 1700 NTU. To keep this parameter and the costs of compliance as low as possible, State Water Board staff has determined, using its BPJ, that it is most cost effective to set the numeric effluent limitation for turbidity at 500 NTU.

a. **Compliance Storm Event**

In response to public comments on the last draft and the recommendations of the expert panel, this General Permit contains "compliance storm event" exceptions from the technology-based NELs. The rationale is that technology-based requirements are developed assuming a certain design storm (defined as the storm producing a rainfall amount for a specified BMPs capacity). Compliance thresholds are needed for storm events above and beyond the design storms assumed to determine the technology-based NELs. For Risk Level 3 project sites applicable to NELs, this General Permit establishes a compliance storm event as the equivalent rainfall in a 5-year, 24-hour storm. This compliance storm was chosen due to its relative infrequent occurrence and the fact that the runoff volume associated with it is not as large as a 10-year, 24-hour storm event. The discharger shall determine this value using Western

Regional Climate Center Precipitation Frequency Maps[9] for 5-year 24-hour storm events in Northern and Southern California (note that these are expressed in tenths of inches – divide by 10 to get inches).

b. TMDLs and Waste Load Allocations

Dischargers located within the watershed of a CWA § 303(d) impaired water body, for which a TMDL for sediment has been adopted by the Regional Water Board or USEPA, must comply with the approved TMDL if it identifies "construction activity" or land disturbance as a source of sediment. If it does, the TMDL should include a specific waste load allocation for this activity/source. The discharger, in this case, may be required by a separate Regional Water Board order to implement additional BMPs, conduct additional monitoring activities, and/or comply with an applicable waste load allocation and implementation schedule. If a specific waste load allocation has been established that would apply to a specific discharge, the Regional Water Board may adopt an order requiring specific implementation actions necessary to meet that allocation. In the instance where an approved TMDL has specified a general waste load allocation to construction storm water discharges, but no specific requirements for construction sites have been identified in the TMDL, dischargers must consult with the state TMDL authority[10] to confirm that adherence to a SWPPP that meets the requirements of the General Permit will be consistent with the approved TMDL.

2. Determining Compliance with Effluent Standards

a. Technology-Based Numeric Action Levels (NALs)

This General Permit contains technology-based NALs for pH and turbidity, and requirements for effluent monitoring at all Risk level 2 & 3, and LUP Type 2 & 3 sites. Numeric action levels are essentially numeric benchmark values for certain parameters that, if exceeded in effluent sampling, trigger the discharger to take actions. Exceedance of an NAL does not itself constitute a violation of the General Permit. If the discharger fails to take the corrective action required by the General Permit, though, that may consititute a violation.

The primary purpose of NALs is to assist dischargers in evaluating the effectiveness of their on-site measures. Construction sites need to employ many different systems that must work together to achieve compliance with the permit's requirements. The NALs chosen should indicate whether the systems are working as intended.

Another purpose of NALs is to provide information regarding construction activities and water quality impacts. This data will provide the State and Regional Water Boards and the rest of the storm water community with more information about levels and types of pollutants present in runoff and how effective the dischargers BMPs are at reducing pollutants in effluent. The State Water Board also hopes to learn more about the linkage between effluent and receiving water quality. In addition, these requirements will provide information on the mechanics needed to establish compliance monitoring programs at construction sites in future permit deliberations.

i. *pH*

[9] http://www.wrcc.dri.edu/pcpnfreq/nca5y24.gif & http://www.wrcc.dri.edu/pcpnfreq/sca5y24.gif .
[10] http://www.waterboards.ca.gov/tmdl/tmdl.html.

The chosen limits were established by calculating one standard deviation above and below the mean pH of runoff from highway construction sites[11] in California. Proper implementation of BMPs should result in discharges that are within the range of 6.5 to 8.5 pH Units.

The Caltrans study included 33 highway construction sites throughout California over a period of four years, which included 120 storm events. All of these sites had BMPs in place that would be generally implemented at all types of construction sites in California.

ii. *Turbidity*

BPJ was used to develop an NAL that can be used as a learning tool to help dischargers improve their site controls, and to provide meaningful information on the effectiveness of storm water controls. A statewide turbidity NAL has been set at 250 NTU.

G. Receiving Water Limitations

Construction-related activities that cause or contribute to an exceedance of water quality standards must be addressed. The dynamic nature of construction activity gives the discharger the ability to quickly identify and monitor the source of the exceedances. This is because when storm water mobilizes sediment, it provides visual cues as to where corrective actions should take place and how effective they are once implemented.

This General Permit requires that storm water discharges and authorized non-storm water discharges must not contain pollutants that cause or contribute to an exceedance of any applicable water quality objective or water quality standards. The monitoring requirements in this General Permit for sampling and analysis procedures will help determine whether BMPs installed and maintained are preventing pollutants in discharges from the construction site that may cause or contribute to an exceedance of water quality standards.

Water quality standards consist of designated beneficial uses of surface waters and the adoption of ambient criteria necessary to protect those uses. When adopted by the State Water Board or a Regional Water Board, the ambient criteria are termed “water quality objectives.” If storm water runoff from construction sites contains pollutants, there is a risk that those pollutants could enter surface waters and cause or contribute to an exceedance of water quality standards. For that reason, dischargers should be aware of the applicable water quality standards in their receiving waters. (The best method to ensure compliance with receiving water limitations is to implement BMPs that prevent pollutants from contact with storm water or from leaving the construction site in runoff.)

In California, water quality standards are published in the Basin Plans adopted by each Regional Water Board, the California Toxics Rule (CTR), the National Toxics Rule (NTR), and the Ocean Plan.

Dischargers can determine the applicable water quality standards by contacting Regional Water Board staff or by consulting one of the following sources. The actual Basin Plans that contain the water quality standards can be viewed at the website of the appropriate Regional Water Board. (http://www.waterboards.ca.gov/regions.html), the State Water Board site for statewide plans (http://www.waterboards.ca.gov/plnspols/index.html), or the USEPA regulations for the NTR and CTR (40 C.F.R. §§ 131.36-38). Basin Plans and statewide plans are also available by mail from the appropriate Regional Water Board or the State Water Board. The USEPA regulations are available at http://www.epa.gov/. Additional information concerning water quality standards can be accessed through http://www.waterboards.ca.gov/stormwtr/gen_const.html.

---

[11] Caltrans Construction Sites Runoff Characterization Study, 2002. Available at: http://www.dot.ca.gov/hq/env/stormwater/pdf/CTSW-RT-02-055.pdf.

H. Training Qualifications and Requirements

The Blue Ribbon Panel (BRP) made the following observation about the lack of industry-specific training requirements:

"Currently, there is no required training or certification program for contractors, preparers of soil erosion and sediment control Storm Water Pollution Prevention Plans, or field inspectors."

Order 99-08-DWQ required that all dischargers train their employees on how to comply with the permit, but it did not specificy a curriculum or certification program. This has resulted in inconsistent implementation by all affected parties - the dischargers, the local governments where the construction activity occurs, and the regulators required to enforce 99-08-DWQ. This General Permit requires Qualified SWPPP Developers and practitioners to obtain appropriate training, and makes this curriculum mandatory two years after adoption, to allow time for course completion. The State and Regional Water Board are working with many stakeholders to develop the curriculum and mechanisms needed to develop and deliver the courses.

To ensure that the preparation, implementation, and oversight of the SWPPP is sufficient for effective pollution prevention, the Qualified SWPPP Developer and Qualified SWPPP Practitioners responsible for creating, revising, overseeing, and implementing the SWPPP must attend a State Water Board-sponsored or approved Qualified SWPPP Developer and Qualified SWPPP Practitioner training course.

I. Sampling, Monitoring, Reporting and Record Keeping

1. Traditional Construction Monitoring Requirements

This General Permit requires visual monitoring at all sites, and effluent water quality at all Risk Level 2 & 3 sites. It requires receiving water monitoring at some Risk Level 3 sites. All sites are required to submit annual reports, which contain various types of information, depending on the site characteristics and events. A summary of the monitoring and reporting requirements is found in Table 4.

Table 4 - Required Monitoring Elements for Risk Levels

	Visual	Non-visible Pollutant	Effluent	Receiving Water
Risk Level 1	three types required for all Risk Levels: non-storm water, pre-rain and post-rain	As needed for all Risk Levels (see below)	where applicable	not required
Risk Level 2			pH, turbidity	not required
Risk Level 3			(if NEL exceeded) pH, turbidity and SSC	(if NEL exceeded) pH, turbidity and SSC. Bioassessment for sites 30 acres or larger.

a. Visual

All dischargers are required to conduct quarterly, non-storm water visual inspections. For these inspections, the discharger must visually observe each drainage area for the presence of (or indications of prior) unauthorized and authorized non-storm water discharges and their sources. For storm-related inspections, dischargers must visually observe storm water discharges at all discharge locations within two business days after a qualifying event. For this requirement, a qualifying rain event is one producing precipitation of ½ inch or more of discharge. Dischargers must conduct a post-storm event inspection to

(1) identify whether BMPs were adequately designed, implemented, and effective, and (2) identify any additional BMPs necessary and revise the SWPPP accordingly. Dischargers must maintain on-site records of all visual observations, personnel performing the observations, observation dates, weather conditions, locations observed, and corrective actions taken in response to the observations.

b. Non-Visible Pollutant Monitoring

This General Permit requires that all dischargers develop a sampling and analysis strategy for monitoring pollutants that are not visually detectable in storm water. Monitoring for non-visible pollutants must be required at any construction site when the exposure of construction materials occurs and where a discharge can cause or contribute to an exceedance of a water quality objective.

Of significant concern for construction discharges are the pollutants found in materials used in large quantities at construction sites throughout California and exposed throughout the rainy season, such as cement, flyash, and other recycled materials or by-products of combustion. The water quality standards that apply to these materials will depend on their composition. Some of the more common storm water pollutants from construction activity are not CTR pollutants. Examples of non-visible pollutants include glyphosate (herbicides), diazinon and chlorpyrifos (pesticides), nutrients (fertilizers), and molybdenum (lubricants). The use of diazinon and chlorpyrifos is a common practice among landscaping professionals and may trigger sampling and analysis requirements if these materials come into contact with storm water. High pH values from cement and gypsum, high pH and SSC from wash waters, and chemical/fecal contamination from portable toilets, also are not CTR pollutants. Although some of these constituents do have numeric water quality objectives in individual Basin Plans, many do not and are subject only to narrative water quality standards (i.e. not causing toxicity). Dischargers are encouraged to discuss these issues with Regional Water Board staff and other storm water quality professionals.

The most effective way to avoid the sampling and analysis requirements, and to ensure permit compliance, is to avoid the exposure of construction materials to precipitation and storm water runoff. Materials that are not exposed do not have the potential to enter storm water runoff, and therefore receiving waters sampling is not required. Preventing contact between storm water and construction materials is one of the most important BMPs at any construction site.

Preventing or eliminating the exposure of pollutants at construction sites is not always possible. Some materials, such as soil amendments, are designed to be used in a manner that will result in exposure to storm water. In these cases, it is important to make sure that these materials are applied according to the manufacturer's instructions and at a time when they are unlikely to be washed away. Other construction materials can be exposed when storage, waste disposal or the application of the material is done in a manner not protective of water quality. For these situations, sampling is required unless there is capture and containment of all storm water that has been exposed. In cases where construction materials may be exposed to storm water, but the storm water is contained and is not allowed to run off the site, sampling will only be required when inspections show that the containment failed or is breached, resulting in potential exposure or discharge to receiving waters.

The discharger must develop a list of potential pollutants based on a review of potential sources, which will include construction materials soil amendments, soil treatments, and historic contamination at the site. The discharger must review existing environmental and real estate documentation to determine the potential for pollutants that could be present on the construction site as a result of past land use activities.

Good sources of information on previously existing pollution and past land uses include:

i. Environmental Assessments;

ii. Initial Studies;

iii. Phase 1 Assessments prepared for property transfers; and

iv. Environmental Impact Reports or Environmental Impact Statements prepared under the requirements of the National Environmental Policy Act or the California Environmental Quality Act.

In some instances, the results of soil chemical analyses may be available and can provide additional information on potential contamination.

The potential pollutant list must include all non-visible pollutants that are known or should be known to occur on the construction site including, but not limited to, materials that:

i. are being used in construction activities;

ii. are stored on the construction site;

iii. were spilled during construction operations and not cleaned up;

iv. were stored (or used) in a manner that created the potential for a release of the materials during past land use activities;

v. were spilled during previous land use activities and not cleaned up; or

vi. were applied to the soil as part of past land use activities.

C. Effluent Monitoring

Federal regulations[12] require effluent monitoring for discharges subject to NALs and NELs. Subsequently, all Risk Level 2 and 3 dischargers must perform sampling and analysis of effluent discharges to characterize discharges associated with construction activity from the entire area disturbed by the project. Dischargers must collect samples of stored or contained storm water that is discharged subsequent to a storm event producing precipitation of ½ inch or more at the time of discharge.

Table 5 - Storm Water Effluent Monitoring Requirements by Risk Level

	Frequency	Effluent Monitoring (Section E, below)
Risk Level 1	when applicable	non-visible pollutant parameters (if applicable)
Risk Level 2	Minimum of 3 samples per day during qualifying rain event characterizing discharges associated with construction activity from the entire project disturbed area.	pH, turbidity, and non-visible pollutant parameters (if applicable)
Risk Level 3	Minimum of 3 samples per day during qualifying rain event characterizing discharges associated with construction activity from the entire project disturbed area.	If NEL exceeded: pH, turbidity and suspended sediment concentration (SSC)., Plus non-visible pollutant parameters if applicable

Risk Level 1 dischargers must analyze samples for:

[12] 40 C.F.R. § 122.44.

i. any parameters indicating the presence of pollutants identified in the pollutant source assessment required in Attachment C contained in the General Permit.

Risk Level 2 dischargers must analyze samples for:

i. pH and turbidity;

ii. any parameters indicating the presence of pollutants identified in the pollutant source assessment required in Attachment D contained in the General Permit, and

iii. any additional parameters for which monitoring is required by the Regional Water Board.

Risk Level 3 dischargers must analyze samples for:

i. pH, turbidity and SSC;

ii. any parameters indicating the presence of pollutants identified in the pollutant source assessment required in Attachment E contained in the General Permit, and

iii. any additional parameters for which monitoring is required by the Regional Water Board.

2. **Linear Monitoring and Sampling Requirements**

Attachment A, establishes minimum monitoring and reporting requirements for all LUPs. It establishes different monitoring requirements depending on project complexity and risk to water quality. The monitoring requirements for Type 1 LUPs are less than Type 2 & 3 projects because Type 1 projects have a lower potential to impact water quality.

A discharger shall prepare a monitoring program prior to the start of construction and immediately implement the program at the start of construction for LUPs. The monitoring program must be implemented at the appropriate level to protect water quality at all times throughout the life of the project.

a. **Type 1 LUP Monitoring Requirements**

A discharger must conduct daily visual inspections of Type 1 LUPs during working hours while construction activities are occurring. Inspections are to be conducted by qualified personnel and can be conducted in conjunction with other daily activities. Inspections will be conducted to ensure the BMPs are adequate, maintained, and in place at the end of the construction day. The discharger will revise the SWPPP, as appropriate, based on the results of the daily inspections. Inspections can be discontinued in non-active construction areas where soil disturbing activities have been completed and final stabilization has been achieved (e.g., trench has been paved, substructures have been installed, and successful final vegetative cover or other stabilization criteria have been met).

A discharger shall implement the monitoring program for inspecting Type 1 LUPs. This program requires temporary and permanent stabilization BMPs after active construction is completed. Inspection activities will continue until adequate permanent stabilization has been established and will continue in areas where re-vegetation is chosen until minimum vegetative coverage has been established. Photographs shall be taken during site inspections and submitted to the State Water Board.

b. Type 2 & 3 LUP Monitoring Requirements

A discharger must conduct daily visual inspections of Type 2 & 3 LUPs during working hours while construction activities are occurring. Inspections are to be conducted by qualified personnel and can be in conjunction with other daily activities.

All dischargers of Type 2 & 3 LUPs are required to conduct inspections by qualified personnel of the construction site during normal working hours prior to all anticipated storm events and after actual storm events. During extended storm events, the discharger shall conduct inspections during normal working hours for each 24-hour period. Inspections can be discontinued in non-active construction areas where soil disturbing activities have been completed and final stabilization has been achieved (e.g., trench has been paved, substructures installed, and successful vegetative cover or other stabilization criteria have been met).

The goals of these inspections are (1) to identify areas contributing to a storm water discharge; (2) to evaluate whether measures to reduce pollutant loadings identified in the SWPPP are adequate and properly installed and functioning in accordance with the terms of the General Permit; and (3) to determine whether additional control practices or corrective maintenance activities are needed. Equipment, materials, and workers must be available for rapid response to failures and emergencies. All corrective maintenance to BMPs shall be performed as soon as possible, depending upon worker safety.

All dischargers shall develop and implement a monitoring program for inspecting Type 2 & 3 LUPs that require temporary and permanent stabilization BMPs after active construction is completed. Inspections will be conducted to ensure the BMPs are adequate and maintained. Inspection activities will continue until adequate permanent stabilization has been established and will continue in areas where revegetation is chosen until minimum vegetative coverage has been established.

A log of inspections conducted before, during, and after the storm events must be maintained in the SWPPP. The log will provide the date and time of the inspection and who conducted the inspection. Photographs must be taken during site inspections and submitted to the State Water Board.

c. Sampling Requirements for all LUP Project Types

LUPs are also subject to sampling and analysis requirements for visible pollutants (i.e., sedimentation/siltation, turbidity) and for non-visible pollutants.

Sampling for visible pollutants is required for Type 2 & 3 LUPs.

Non-visible pollutant monitoring is required for pollutants associated with construction sites and activities that (1) are not visually detectable in storm water discharges, and (2) are known or should be known to occur on the construction site, and (3) could cause or contribute to an exceedance of water quality objectives in the receiving waters. Sample collection for non-visible pollutants must only be required (1) during a storm event when pollutants associated with construction activities may be discharged with storm water runoff due to a spill, or in the event there was a breach, malfunction, failure, and/or leak of any BMP, and (2) when the discharger has failed to adequately clean the area of material and pollutants. Failure to implement appropriate BMPs will trigger the same sampling requirements as those required for a breach, malfunction and/or leak, or when the discharger has failed to implement appropriate BMPs prior to the next storm event.

Additional monitoring parameters may be required by the Regional Water Boards.

It is not anticipated that many LUPs will be required to collect samples for pollutants not visually detected in runoff due to the nature and character of the construction site and activities as previously described in this fact sheet. Most LUPs are constructed in urban areas with public access (e.g., existing roadways, road shoulders, parking areas, etc.). This raises a concern regarding the potential contribution of pollutants from vehicle use and/or from normal activities of the public (e.g., vehicle washing, landscape fertilization, pest spraying, etc.) in runoff from the project site. Since the dischargers are not the land

owners of the project area and are not able to control the presence of these pollutants in the storm water that runs through their projects, it is not the intent of this General Permit to require dischargers to sample for these pollutants. This General Permit does not require the discharger to sample for these types of pollutants except where the discharger has brought materials onsite that contain these pollutants and when a condition (e.g., breach, failure, etc.) described above occurs.

3. Receiving Water Monitoring

In order to ensure that receiving water limitations are met, discharges subject to numeric effluent limitations (i.e., Risk Level 3, LUP Type 3, and ATS with direct discharges into receiving waters) must also monitor the downstream receiving water(s) for turbidity, SSC, and pH (if applicable) when an NEL is exceeded.

a. Bioassessment Monitoring

This General Permit requires a bioassessment of receiving waters for dischargers of Risk Level 3 or LUP Type 3 construction projects equal to or larger than 30 acres with direct discharges into receiving waters. Benthic macroinvertebrate samples will be taken upstream and downstream of the site's discharge point in the receiving water. Bioassessments measure the quality of the stream by analyzing the aquatic life present. Higher levels of appropriate aquatic species tend to indicate a healthy stream; whereas low levels of organisms can indicate stream degradation. Active construction sites have the potential to discharge large amounts of sediment and pollutants into receiving waters. Requiring a bioassessment for large project sites, with the most potential to impact water quality, provides a snapshot of the health of the receiving water prior to initiation of construction activities. This snapshot can be used in comparison to the health of the receiving water after construction has commenced.

Each ecoregion (biologically and geographically related area) in the State has a specific yearly peak time where stream biota is in a stable and abundant state. This time of year is called an Index Period. The bioassessment requirements in this General Permit, requires benthic macroinvertebrate sampling within a sites index period. The State Water Board has developed a map designating index periods for the ecoregions in the State (see State Water Board Website).

This General Permit requires the bioassessment methods to be in accordance with the Surface Water Ambient Monitoring Program (SWAMP) in order to provide data consistency within the state as well as generate useable biological stream data.

Table 6 - Receiving Water Monitoring Requirements

	Receiving Water Monitoring Parameters
Risk Level 1 /LUP Type 1	not required
Risk Level 2 / LUP Type 2	not required
Risk Level 3 / LUP Type 3	If NEL exceeded: pH (if applicable), turbidity, and SSC. Bioassessment for sites 30 acres or larger.

4. Reporting Requirements

a. NEL Violation Report

All Risk Level 3 and LUP Type 3 dischargers must electronically submit all storm event sampling results to the State and Regional Water Boards, via SMARTS, no later than 5 days after the conclusion of the storm event. The purpose of the electronic filing of the NEL Violation Report is to 1) inform stakeholder agencies and organizations and the general public, and 2) notify the State and Regional Water Boards of

the exceedance so that they can determine whether any follow-up (e.g., inspection, enforcement, etc.) is necessary to bring the site into compliance.

In the event that an applicable NEL has been exceeded during a storm event equal to or larger than the Compliance Storm Event, Risk level 3/LUP Type 3 dischargers shall report the on-site rain gauge reading and nearby governmental rain gauge readings for verification. Specifically, the NEL Exceedance Report is required to contain:

- the analytical method(s), method reporting unit(s), and method detection limit(s) of each analytical parameter (analytical results that are less than the method detection limit are to be reported as "less than the method detection limit or <MDL");
- the date, place, and time of sampling;
- any visual observation (inspections);
- any measurements, including precipitation; and
- a description of the current BMPs associated with the effluent sample that exceeded the NEL and any proposed corrective actions taken.

b. **NAL Exceedance Report**

All Risk Level 3 and LUP Type 3 dischargers must electronically submit all storm event sampling results to the State and Regional Water Boards, via the electronic data system, no later than 5 days after the conclusion of the storm event. In the event that any effluent sample exceeds an applicable NAL, all Risk Level 2 and LUP Type 2 dischargers must electronically submit all storm event sampling results to the State and Regional Water Boards no later than 10 days after the conclusion of the storm event. The Regional Water Boards have the authority to require the submittal of an NAL Exceedance Report.

Specifically, the NAL Exceedance Report is required to contain:

- the analytical method(s), method reporting unit(s), and method detection limit(s) of each analytical parameter (analytical results that are less than the method detection limit are to be reported as "less than the method detection limit or <MDL");
- the date, place, and time of sampling;
- any visual observation (inspections);
- any measurements, including precipitation; and
- a description of the current BMPs associated with the effluent sample that exceeded the NAL and any proposed corrective actions taken.

c. **Annual Report**

All dischargers must prepare and electronically submit an annual report no later than September 1 of each year using the Storm water Multi-Application Reporting and Tracking System (SMARTS). The Annual Report must include a summary and evaluation of all sampling and analysis results, original laboratory reports, chain of custody forms, a summary of all corrective actions taken during the compliance year, and identification of any compliance activities or corrective actions that were not implemented.

5. Record Keeping

According to 40 C.F.R. Parts 122.21(p) and 122.41(j), the discharger is required to retain paper or electronic copies of all records required by this General Permit for a period of at least three years from the date generated or the date submitted to the State Water Board or Regional Water Boards. A discharger must retain records for a period beyond three years as directed by Regional Water Board.

J. Risk Determination

1. Traditional Projects

a. Overall Risk Determination

There are two major requirements related to site planning and risk determination in this General Permit. The project's overall risk is broken up into two elements – (1) project sediment risk (the relative amount of sediment that can be discharged, given the project and location details) and (2) receiving water risk (the risk sediment discharges pose to the receiving waters).

Project Sediment Risk:
Project Sediment Risk is determined by multiplying the R, K, and LS factors from the Revised Universal Soil Loss Equation (RUSLE) to obtain an estimate of project-related bare ground soil loss expressed in tons/acre. The RUSLE equation is as follows:

A = (R)(K)(LS)(C)(P)

Where: A = the rate of sheet and rill erosion
R = rainfall-runoff erosivity factor
K = soil erodibility factor
LS = length-slope factor
C = cover factor (erosion controls)
P = management operations and support practices (sediment controls)

The C and P factors are given values of 1.0 to simulate bare ground conditions.

There is a map option and a manual calculation option for determining soil loss. For the map option, the R factor for the project is calculated using the online calculator at http://cfpub.epa.gov/npdes/stormwater/LEW/lewCalculator.cfm. The product of K and LS are shown on Figure 1. To determine soil loss in tons per acre, the discharger multiplies the R factor times the value for K times LS from the map.

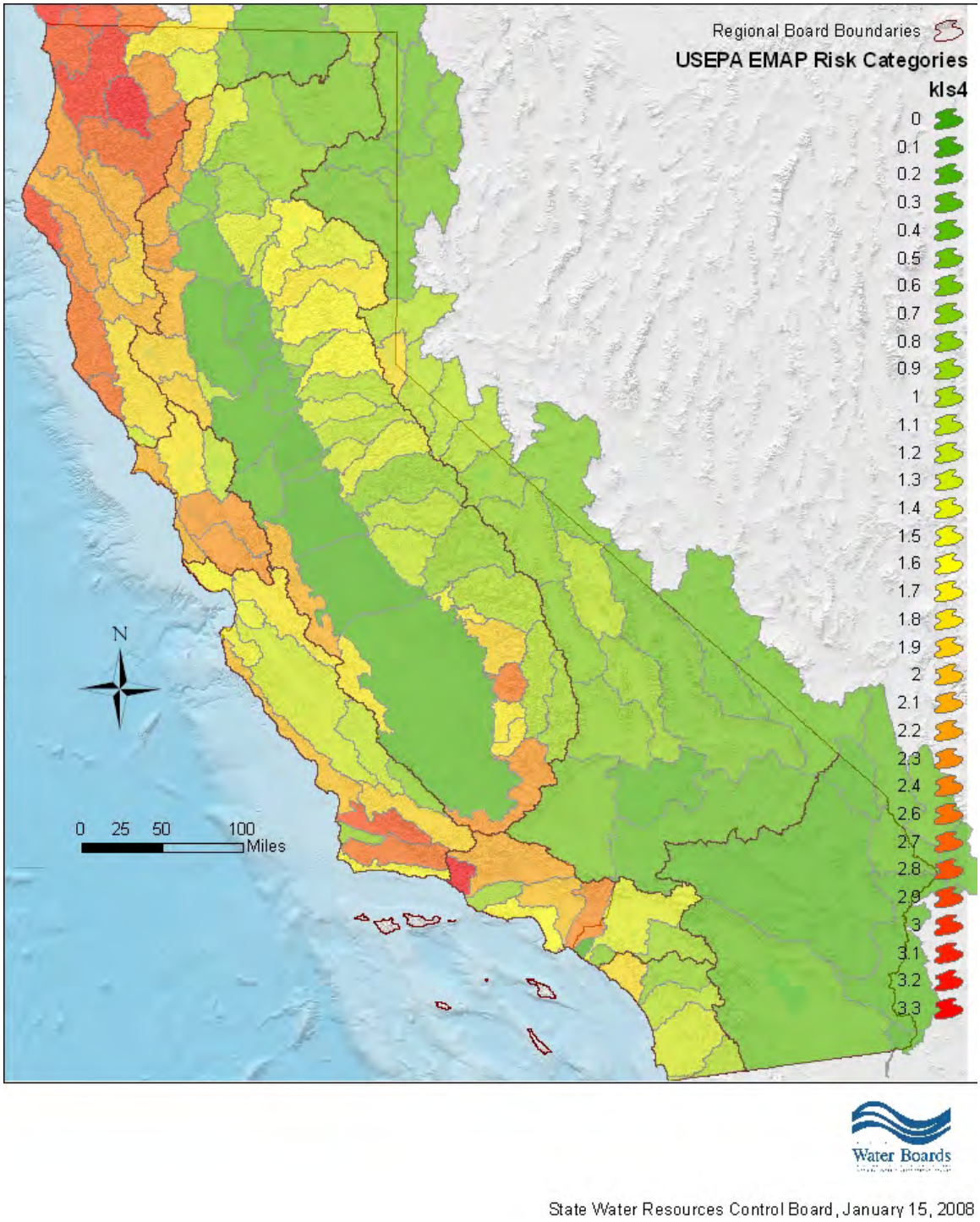

Figure 1 -Statewide Map of K * LS

For the manual calculation option, the R factor for the project is calculated using the online calculator at http://cfpub.epa.gov/npdes/stormwater/LEW/lewCalculator.cfm. The K and LS factors are determined using Appendix 1.

Soil loss of less than 15 tons/acre is considered **low** sediment risk.
Soil loss between 15 and 75 tons/acre is **medium** sediment risk.
Soil loss over 75 tons/acre is considered **high** sediment risk.

The soil loss values and risk categories were obtained from mean and standard deviation RKLS values from the USEPA EMAP program. High risk is the mean RKLS value plus two standard deviations. Low risk is the mean RKLS value minus two standard deviations.

Receiving Water Risk:
Receiving water risk is based on whether a project drains to a sediment-sensitive waterbody. A sediment-sensitive waterbody is either

on the most recent 303d list for waterbodies impaired for sediment;
has a USEPA-approved Total Maximum Daily Load implementation plan for sediment; **or**
has the beneficial uses of COLD, SPAWN, and MIGRATORY.

A project that meets at least one of the three criteria has a high receiving water risk. A list of sediment-sensitive waterbodies will be posted on the State Water Board's website. It is anticipated that an interactive map of sediment sensitive water bodies in California will be available in the future.

The Risk Levels have been altered by eliminating the possibility of a Risk Level 4, and expanding the constraints for Risk Levels 1, 2, and 3. Therefore, projects with high receiving water risk and high sediment risk will be considered a Risk Level 3 risk to water quality.

In response to public comments, the Risk Level requirements have also been changed such that Risk Level 1 projects will be subject to minimum BMP and visual monitoring requirements, Risk Level 2 projects will be subject to NALs and some additional monitoring requirements, and Risk Level 3 projects will be subject to NELs, and more rigorous monitoring requirements such as receiving water monitoring and in some cases bioassessment.

Table 7 - Combined Risk Level Matrix

Combined Risk Level Matrix				
Receiving Water Risk		Sediment Risk		
		Low	Medium	High
	Low	Level 1	Level 2	
	High	Level 2		Level 3

b. Effluent Standards

All dischargers are subject to the narrative effluent limitations specified in the General Permit. The narrative effluent limitations require storm water discharges associated with construction activity to meet all applicable provisions of Sections 301 and 402 of the CWA. These provisions require controls of pollutant discharges that utilize BAT and BCT to reduce pollutants and any more stringent controls necessary to meet water quality standards.

Risk Level 2, and 3 dischargers are subject to numeric effluent standards comparable to the project's risk to water quality. Risk Level 2 dischargers that pose a medium risk to water quality are subject to technology-based NALs for pH and turbidity. Risk Level 3 dischargers that pose a high risk to water quality are subject to technology-based NALs and technology-based NELs for pH and turbidity.

c. Good Housekeeping

Proper handling and managing of construction materials can help minimize threats to water quality. The discharger must consider good housekeeping measures for: construction materials, waste management, vehicle storage & maintenance, landscape materials, and potential pollutant sources. Examples include; conducting an inventory of products used, implementing proper storage & containment, and properly cleaning all leaks from equipment and vehicles.

d. Non-Storm Water Management

Non-storm water discharges directly connected to receiving waters or the storm drain system have the potential to negatively impact water quality. The discharger must implement measures to control all non-storm water discharges during construction, and from dewatering activities associated with construction. Examples include; properly washing vehicles in contained areas, cleaning streets, and minimizing irrigation runoff.

e. Erosion Control

The best way to minimize the risk of creating erosion and sedimentation problems during construction is to disturb as little of the land surface as possible by fitting the development to the terrain. When development is tailored to the natural contours of the land, little grading is necessary and, consequently, erosion potential is lower.[14] Other effective erosion control measures include: preserving existing vegetation where feasible, limiting disturbance, and stabilizing and re-vegetating disturbed areas as soon as possible after grading or construction activities. Particular attention must be paid to large, mass-graded sites where the potential for soil exposure to the erosive effects of rainfall and wind is great and where there is potential for significant sediment discharge from the site to surface waters. Until permanent vegetation is established, soil cover is the most cost-effective and expeditious method to protect soil particles from detachment and transport by rainfall. Temporary soil stabilization can be the single most important factor in reducing erosion at construction sites. The discharger is required to consider measures such as: covering disturbed areas with mulch, temporary seeding, soil stabilizers, binders, fiber rolls or blankets, temporary vegetation, and permanent seeding. These erosion control measures are only examples of what should be considered and should not preclude new or innovative approaches currently available or being developed. Erosion control BMPs should be the primary means of preventing storm water contamination, and sediment control techniques should be used to capture any soil that becomes eroded.[13]

Risk Level 3 dischargers pose a higher risk to water quality and are therefore additionally required to ensure that post-construction soil loss is equivalent to or less than the pre-construction levels.

f. Sediment Control

Sediment control BMPs should be the secondary means of preventing storm water contamination. When erosion control techniques are ineffective, sediment control techniques should be used to capture any soil that becomes eroded. The discharger is required to consider perimeter control measures such as: installing silt fences or placing straw wattles below slopes. These sediment control measures are only examples of what should be considered and should not preclude new or innovative approaches currently available or being developed.

Because Risk Level 2 and 3 dischargers pose a higher risk to water quality, additional requirements for the application of sediment controls are imposed on these projects. This General Permit also authorizes the Regional Water Boards to require Risk Level 3 dischargers to implement additional site-specific

---

[13] U.S. Environmental Protection Agency. 2007. Developing Your Storm Water Pollution Prevention Plan: A Guide for Construction Sites.

sediment control requirements if the implementation of other erosion or sediment controls are not adequately protecting the receiving waters.

g. Run-on and Runoff Control

Inappropriate management of run-on and runoff can result in excessive physical impacts to receiving waters from sediment and increased flows. The discharger is required to manage all run-on and runoff from a project site. Examples include: installing berms and other temporary run-on and runoff diversions.

Risk Level 1 dischargers with lower risks to impact water quality are not subject to the run-on and runoff control requirements unless an evaluation deems them necessary or visual inspections show that such controls are required.

h. Inspection, Maintenance and Repair

All measures must be periodically inspected, maintained and repaired to ensure that receiving water quality is protected. Frequent inspections coupled with thorough documentation and timely repair is necessary to ensure that all measures are functioning as intended.

i. Rain Event Action Plan (REAP)

A Rain Event Action Plan (REAP) is a written document, specific for each rain event. A REAP should be designed that when implemented it protects all exposed portions of the site within 48 hours of any likely precipitation event forecast of 50% or greater probability.

This General Permit requires Risk Level 2 and 3 dischargers to develop and implement a REAP designed to protect all exposed portions of their sites within 48 hours prior to any likely precipitation event. The REAP requirement is designed to ensure that the discharger has adequate materials, staff, and time to implement erosion and sediment control measures that are intended to reduce the amount of sediment and other pollutants generated from the active site. A REAP must be developed when there is likely a forecast of 50% or greater probability of precipitation in the project area. (The National Oceanic and Atmospheric Administration (NOAA) defines a chance of precipitation as a probability of precipitation of 30% to 50% chance of producing precipitation in the project area.[14] NOAA defines the probability of precipitation (PoP) as the likelihood of occurrence (expressed as a percent) of a measurable amount (0.01 inch or more) of liquid precipitation (or the water equivalent of frozen precipitation) during a specified period of time at any given point in the forecast area.) Forecasts are normally issued for 12-hour time periods. Descriptive terms for uncertainty and aerial coverage are used as follows:

Table 8 -National Oceanic and Atmospheric Administration (NOAA) Definition of Probability of Precipitation (PoP)

PoP	Expressions of Uncertainty	Aerial Coverage
0%	none used	none used
10%	none used	isolated
20%	slight chance	isolated
30-50%	chance	scattered

[14] http://www.crh.noaa.gov/lot/severe/wxterms.php.

60-70%	likely	numerous
80-100%	none used	none used

The discharger must obtain the precipitation forecast information from the National Weather Service Forecast Office (http://www.srh.noaa.gov/).

2. Linear Projects

a. Linear Risk Determination

LUPs vary in complexity and water quality concerns based on the type of project. This General Permit has varying application requirements based on the project's risk to water quality. Factors that lead to the characterization of the project include location, sediment risk, and receiving water risk.

Based on the location and complexity of a project area or project section area, LUPs are separated into project types. As described below, LUPs have been categorized into three project types.

i. *Type 1 LUPs*

Type 1 LUPs are those construction projects where:

(1) 70 percent or more of the construction activity occurs on a paved surface and where areas disturbed during construction will be returned to preconstruction conditions or equivalent protection established at the end of the construction activities for the day, or

(2) greater than 30 percent of construction activities occur within the non-paved shoulders or land immediately adjacent to paved surfaces, or where construction occurs on unpaved improved roads, including their shoulders or land immediately adjacent to them where:

Areas disturbed during construction will be returned to pre-construction conditions or equivalent protection established at the end of the construction activities for the day to minimize the potential for erosion and sediment deposition, and

Areas where established vegetation was disturbed during construction will be stabilized and re-vegetated by the end of project. When required, adequate temporary stabilization Best Management Practices (BMPs) will be installed and maintained until vegetation is established to meet minimum cover requirements established in this General Permit for final stabilization.

Type 1 LUPs typically do not have a high potential to impact storm water quality because (1) these construction activities are not typically conducted during a rain event, (2) these projects are normally constructed over a short period of time[15], minimizing the duration that pollutants could potentially be exposed to rainfall; and (3) disturbed soils such as those from trench excavation are required to be hauled away, backfilled into the trench, and/or covered (e.g., metal plates, pavement, plastic covers over spoil piles) at the end of the construction day.

[15] Short period of time refers to a project duration of weeks to months, but typically less than one year in duration.

Type 1 LUPs are determined during the risk assessment found in Attachment A.1 to be 1) low sediment risk and low receiving water risk; 2) low sediment risk and medium receiving water risk; and 3) medium sediment risk and low receiving water risk.

This General Permit requires the discharger to ensure a SWPPP is developed for these construction activities that is specific to project type, location and characteristics.

ii. ***Type 2 LUPs:***

Type 2 projects are determined to have a combination of High, Medium, and Low project sediment risk along with High, Medium, and Low receiving water risk. Like Type 1 projects, Type 2 projects are typically constructed over a short period of time. However, these projects have a higher potential to impact water quality because they:

(1) typically occur outside the more urban/developed areas;

(2) have larger areas of soil disturbance that are not closed or restored at the end of the day;

(3) may have onsite stockpiles of soil, spoil and other materials;

(4) cross or occur in close proximity to a wide variety of sensitive resources that may include, but are not limited to, steep topography and/or water bodies; and

(5) have larger areas of disturbed soils that may be exposed for a longer time interval before final stabilization, cleanup and/or reclamation occurs.

This General Permit requires the discharger to develop and implement a SWPPP for these construction activities that are specific for project type, location and characteristics.

iii. ***Type 3 LUPs:***

Type 3 projects are determined to have a combination of High and Medium project sediment risk along with High and Medium receiving water risk. Similar to Type 2 projects, Type 3 projects have a higher potential to impact water quality because they:

(1) typically occur outside of the more urban/developed areas;

(2) have larger areas of soil disturbance that are not closed or restored at the end of the day;

(3) may have onsite stockpiles of soil, spoil and other materials;

(4) cross or occur in close proximity to a wide variety of sensitive resources that may include, but are not limited to, steep topography and/or water bodies; and

(5) have larger areas of disturbed soils that may be exposed for a longer time interval before final stabilization, cleanup and/or reclamation occurs.

This General Permit requires the discharger to develop and implement a SWPPP for these construction activities that are specific for project type, location, and characteristics.

b. **Linear Effluent Standards**

All LUPs are subject to the narrative effluent limitations specified in the General Permit.

Type 2 and 3 LUPs are subject to NELs comparable to the project type's risk to water quality. Type 2 projects that pose an intermediate risk to water quality are subject to technology-based NALs for pH and turbidity. Type 3 projects posing a high risk to water quality are subject to technology-based NALs and NELs for pH and turbidity.

c. Linear Good Housekeeping

Improper use and handling of construction materials could potentially cause a threat to water quality. In order to ensure proper site management of these construction materials, all LUP dischargers must comply with a minimum set of Good Housekeeping measures specified in Attachment A of this General Permit.

d. Linear Non-Storm Water Management

In order to ensure control of all non-storm water discharges during construction, all LUP dischargers must comply with the Non-Storm Water Management measures specified in Attachment A of this General Permit.

e. Linear Erosion Control

This General Permit requires all LUP dischargers to implement effective wind erosion control measures, and soil cover for inactive areas. Type 3 LUPs posing a higher risk to water quality are additionally required to ensure the post-construction soil loss is equivalent to or less than the pre-construction levels.

f. Linear Sediment Control

In order to ensure control and containment of all sediment discharges, all LUP dischargers must comply with the general Sediment Control measures specified in Attachment A or this General Permit. Additional requirements for sediment controls are imposed on Type 2 & 3 LUPs due to their higher risk to water quality.

g. Linear Run-on and Runoff Control

Discharges originating outside of a project's perimeter and flowing onto the property can adversely affect the quantity and quality of discharges originating from a project site. In order to ensure proper management of run-on and runoff, all LUPs must comply with the run-on and runoff control measures specified in Attachment A of this General Permit. Due to the lower risk of impacting water quality, Type 1 LUPs are not required to implement run-on and runoff controls unless deemed necessary by the discharger.

h. Linear Inspection, Maintenance and Repair

Proper inspection, maintenance, and repair activities are important to ensure the effectiveness of on-site measures to control water quality. In order to ensure that inspection, maintenance, and repair activities are adequately performed, the all LUP dischargers a re required to comply with the Inspection, Maintenance, and Repair requirements specified in Attachment A of this General Permit.

K. ATS[16] Requirements

There are instances on construction sites where traditional erosion and sediment controls do not effectively control accelerated erosion. Under such circumstances, or under circumstances where storm water discharges leaving the site may cause or contribute to an exceedance of a water quality standard, the use of an Active Treatment System (ATS) may be necessary. Additionally, it may be appropriate to use an ATS when site constraints inhibit the ability to construct a correctly sized sediment basin, when clay and/or highly erosive soils are present, or when the site has very steep or long slope lengths.[17]

Although treatment systems have been in use in some form since the mid-1990s, the ATS industry in California is relatively young, and detailed regulatory standards have not yet been developed. Many developers are using these systems to treat storm water discharges from their construction sites. The new ATS requirements set forth in this General Permit are based on those in place for small wastewater treatment systems, ATS regulations from the Central Valley Regional Water Quality Control Board (September 2005 memorandum "2005/2006 Rainy Season – Monitoring Requirements for Storm Water Treatment Systems that Utilize Chemical Additives to Enhance Sedimentation"), the Construction Storm Water Program at the State of Washington's Department of Ecology, as well as recent advances in technology and knowledge of coagulant performance and aquatic safety.

The effective design of an ATS requires a detailed survey and analysis of site conditions. With proper planning, ATS performance can provide exceptional water quality discharge and prevent significant impacts to surface water quality, even under extreme environmental conditions.

These systems can be very effective in reducing the sediment in storm water runoff, but the systems that use additives/polymers to enhance sedimentation also pose a potential risk to water quality (e.g., operational failure, equipment failure, additive/polymer release, etc.). The State Water Board is concerned about the potential acute and chronic impacts that the polymers and other chemical additives may have on fish and aquatic organisms if released in sufficient quantities or concentrations. In addition to anecdotal evidence of polymer releases causing aquatic toxicity in California, the literature supports this concern.[18] For example, cationic polymers have been shown to bind with the negatively charged gills of fish, resulting in mechanical suffocation.[19] Due to the potential toxicity impacts, which may be caused by the release of additives/polymers into receiving waters, this General Permit establishes residual polymer monitoring and toxicity testing requirements have been established in this General Permit for discharges from construction sites that utilize an ATS in order to protect receiving water quality and beneficial uses.

The primary treatment process in an ATS is coagulation/flocculation. ATS's operate on the principle that the added coagulant is bound to suspended sediment, forming floc, which is gravitationally settled in tanks or a basin, or removed by sand filters. A typical installation utilizes an injection pump upstream from the clarifier tank, basin, or sand filters, which is electronically metered to both flow rate and suspended solids level of the influent, assuring a constant dose. The coagulant mixes and reacts with the influent, forming a dense floc. The floc may be removed by gravitational setting in a clarifier tank or basin, or by filtration. Water from the clarifier tank, basin, or sand filters may be routed through cartridge(s) and/or bag filters for final polishing. Vendor-specific systems use various methods of dose control, sediment/floc removal, filtration, etc., that are detailed in project-specific documentation. The

---

[16] An ATS is a treatment system that employs chemical coagulation, chemical flocculation, or electrocoagulation in order to reduce turbidity caused by fine suspended sediment.
[17] Pitt, R., S. Clark, and D. Lake. 2006. Construction Site Erosion and Sediment Controls: Planning, Design, and Performance. DEStech Publications. Lancaster, PA. 370pp.
[18] RomØen, K., B. Thu, and Ø. Evensen. 2002. Immersion delivery of plasmid DNA II. A study of the potentials of a chitosan based delivery system in rainbow trout (*Oncorhynchus mykiss*) fry. *Journal of Controlled Release* **85**: 215-225.
[19] Bullock, G., V. Blazer, S. Tsukuda, and S. Summerfelt. 2000. Toxicity of acidified chitosan for cultured rainbow trout (*Oncorhynchus mykiss*). *Aquaculture* **185**:273-280.

particular coagulant/flocculant to be used for a given project is determined based on the water chemistry of the site because the coagulants are specific in their reactions with various types of sediments. Appropriate selection of dosage must be carefully matched to the characteristics of each site.

ATS's are operated in two differing modes, either Batch or Flow-Through. Batch treatment can be defined as Pump-Treat-Hold-Test-Release. In Batch treatment, water is held in a basin or tank, and is not discharged until treatment is complete. Batch treatment involves holding or recirculating the treated water in a holding basin or tank(s) until treatment is complete or the basin or storage tank(s) is full. In Flow-Through treatment, water is pumped into the ATS directly from the runoff collection system or storm water holding pond, where it is treated and filtered as it flows through the system, and is then directly discharged. "Flow-Through Treatment" is also referred to as "Continuous Treatment."

1. Effluent Standards

This General Permit establishes NELs for discharges from construction sites that utilize an ATS. These systems lend themselves to NELs for turbidity and pH because of their known reliable treatment. Advanced systems have been in use in some form since the mid-1990s. An ATS is considered reliable, can consistently produce a discharge of less than 10 NTU, and has been used successfully at many sites in several states since 1995 to reduce turbidity to very low levels.[20]

This General Permit contains "compliance storm event" exceptions from the technology-based NELs for ATS discharges. The rationale is that technology-based requirements are developed assuming a certain design storm. In the case of ATS the industry-standard design storm is 10-year, 24-hour (as stated in Attachment F of this General Permit), so the compliance storm event has been established as the 10-year 24-hour event as well to provide consistency.

2. Training

Operator training is critical to the safe and efficient operation and maintenance of the ATS, and to ensure that all State Water Board monitoring and sampling requirements are met. The General Permit requires that all ATS operators have training specific to using ATS's liquid coagulants.

L. Post-Construction Requirements

Under past practices, new and redevelopment construction activities have resulted in modified natural watershed and stream processes. This is caused by altering the terrain, modifying the vegetation and soil characteristics, introducing impervious surfaces such as pavement and buildings, increasing drainage density through pipes and channels, and altering the condition of stream channels through straightening, deepening, and armoring. These changes result in a drainage system where sediment transport capacity is increased and sediment supply is decreased. A receiving channel's response is dependent on dominant channel materials and its stage of adjustment.

Construction activity can lead to impairment of beneficial uses in two main ways. First, during the actual construction process, storm water discharges can negatively affect the chemical, biological, and physical properties of downstream receiving waters. Due to the disturbance of the landscape, the most likely pollutant is sediment, however pH and other non-visible pollutants are also of great concern. Second, after most construction activities are completed at a construction site, the finished project may result in significant modification of the site's response to precipitation. New development and redevelopment

---

[20] Currier, B., G. Minton, R. Pitt, L. Roesner, K. Schiff, M. Stenstrom, E. Strassler, and E. Strecker. 2006. The Feasibility of Numeric Effluent Limits Applicable to Discharges of Storm Water Associated with Municipal, Industrial and Construction Activities.

projects have almost always resulted in permanent post-construction water quality impacts because more precipitation ends up as runoff and less precipitation is intercepted, evapotranspired, and infiltrated.

General Permit 99-08-DWQ required the SWPPP to include a description of all post-construction BMPs on a site and a maintenance schedule. An effective storm water management strategy must address the full suite of storm events (water quality, channel protection, overbank flood protection, extreme flood protection) (Figure 2).

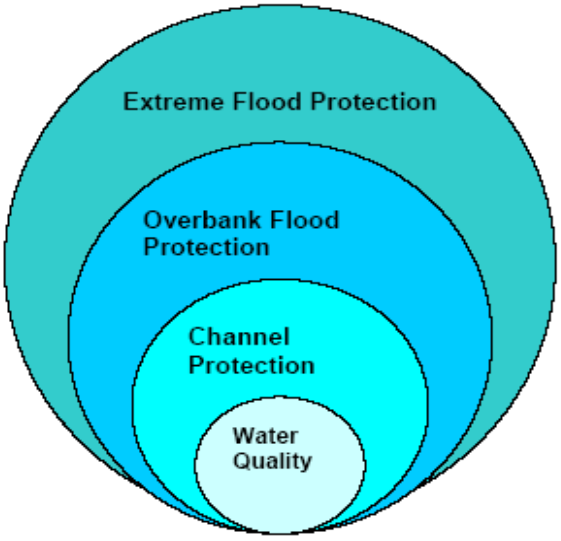

Figure 2 - Suite of Storm Events

The post-construction storm water performance standards in this General Permit specifically address water quality and channel protection events. Overbank flood protection and extreme flood protection events are traditionally dealt with in local drainage and flood protection ordinances. However, measures in this General Permit to address water quality and channel protection also reduce overbank and extreme flooding impacts. This General Permit aims to match post-construction runoff to pre-construction runoff for the 85th percentile storm event, which not only reduces the risk of impact to the receiving water's channel morphology but also provides some protection of water quality.

This General Permit clarifies that its runoff reduction requirements only apply to projects that lie outside of jurisdictions covered by a Standard Urban Storm water Management Plan (SUSMP) (or other more protective) post-construction requirements in either Phase I or Phase II permits.

Figures 3 and 4, below, show the General Permit enrollees (to Order 99-08-DWQ, as of March 10, 2008) overlaid upon a map with SUSMP (or more protective) areas in blue and purple. Areas without blue or purple indicate where the General Permit's runoff reduction requirements would actually apply.

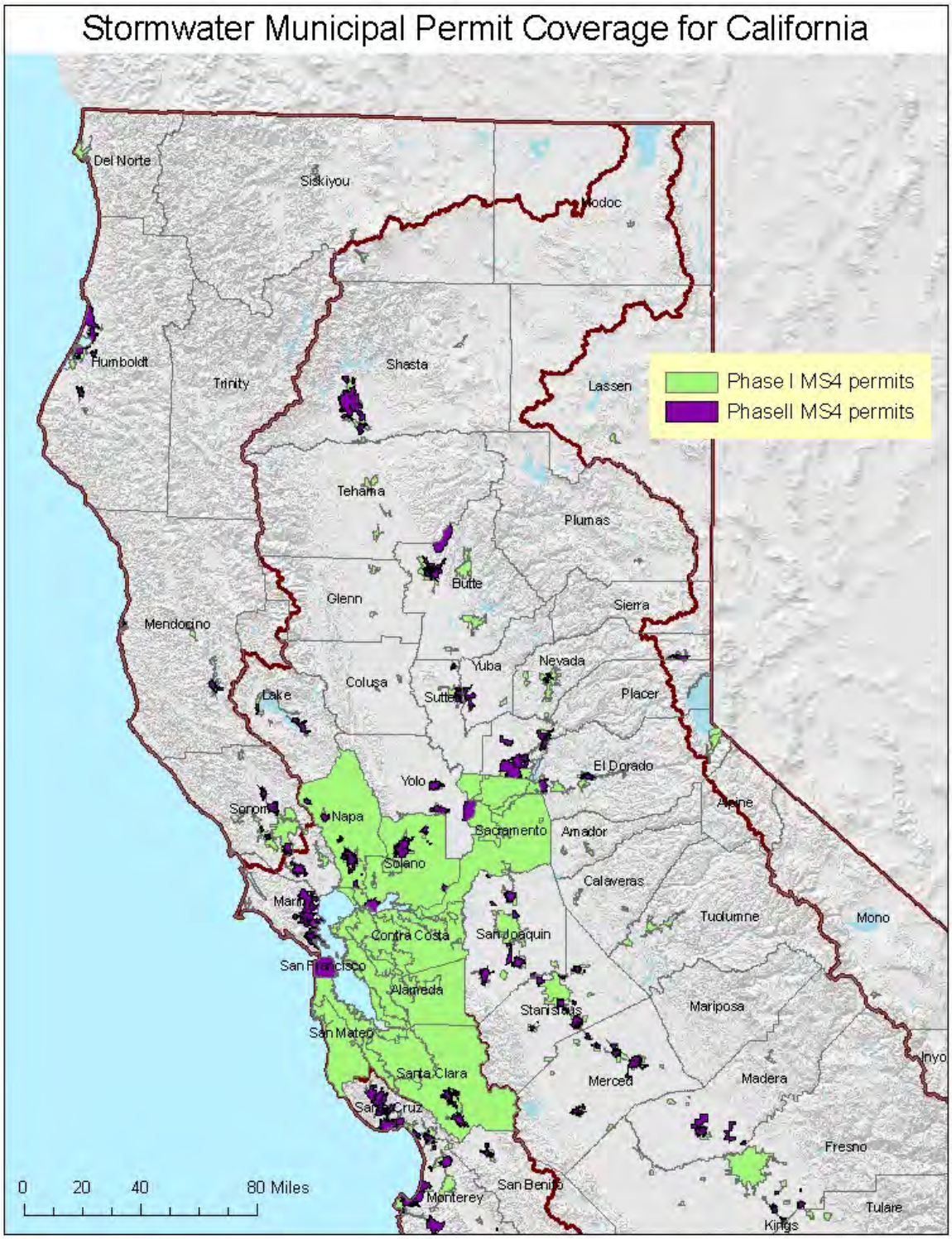

Figure 3 - Northern CA (2009) Counties / Cities With SUSMP-Plus Coverage

Figure 4 - Southern CA (2009) Counties / Cities With SUSMP-Plus Coverage

Water Quality:
This General Permit requires dischargers to replicate the pre-project runoff water balance (defined as the amount of rainfall that ends up as runoff) for the smallest storms up to the 85th percentile storm event, or the smallest storm event that generates runoff, whichever is larger. Contemporary storm water management generally routes these flows directly to the drainage system, increasing pollutant loads and potentially causing adverse effects on receiving waters. These smaller water quality events happen much more frequently than larger events and generate much higher pollutant loads on an annual basis. There are other adverse hydrological impacts that result from not designing according to the site's pre-construction water balance. In Maryland, Klein[21] noted that baseflow decreases as the extent of urbanization increases. Ferguson and Suckling[22] noted a similar relation in watersheds in Georgia. On Long Island, Spinello and Simmons[23] noted substantial decreases in base flow in intensely urbanized watersheds.

The permit emphasizes runoff reduction through on-site storm water reuse, interception, evapo-transpiration and infiltration through non-structural controls and conservation design measures (e.g., downspout disconnection, soil quality preservation/enhancement, interceptor trees). Employing these measures close to the source of runoff generation is the easiest and most cost-effective way to comply with the pre-construction water balance standard. Using low-tech runoff reduction techniques close to the source is consistent with a number of recommendations in the literature.[24] In many cases, BMPs implemented close to the source of runoff generation cost less than end-of the pipe measures.[25] Dischargers are given the option of using Appendix 2 to calculate the required runoff volume or a watershed process-based, continuous simulation model such as the EPA's Storm Water Management Model (SWMMM) or Hydrologic Simulation Program Fortran (HSPF). Such methods used by the discharger will be reviewed by the Regional Water Board upon NOT application.

Channel Protection:
In order to address channel protection, a basic understanding of fluvial geomorphic concepts is necessary. A dominant paradigm in fluvial geomorphology holds that streams adjust their channel dimensions (width and depth) in response to long-term changes in sediment supply and bankfull discharge (1.5 to 2 year recurrence interval). The bankfull stage corresponds to the discharge at which channel maintenance is the most effective, that is, the discharge at which the moving sediment, forming or removing bars, forming or changing bends and meanders, and generally doing work that results in the average morphologic characteristics of channels.[26] Lane (1955 as cited in Rosgen 1996[27]) showed the generalized relationship between sediment load, sediment size, stream discharge and stream slope in Figure 5. A change in any one of these variables sets up a series of mutual adjustments in the companion variables with a resulting direct change in the physical characteristics of the stream channel.

---

[21] Klein 1979 as cited in Delaware Department of Natural Resources (DDNR). 2004. Green Technology: The Delaware Urban Runoff Management Approach. Dover, DE. 117 pp.
[22] Ferguson and Suckling 1990 as cited Delaware Department of Natural Resources (DDNR). 2004. Green Technology: The Delaware Urban Runoff Management Approach. Dover, DE. 117 pp.
[23] Center for Watershed Protection (CWP). 2000. The Practice of Watershed Protection: Techniques for protecting our nation's streams, lakes, rivers, and estuaries. Ellicott City, MD. 741 pp.
[24] Bay Area Storm Water Management Agencies Association (BASMAA). 1997. Start at the Source: Residential Site Planning and Design Guidance Manual for Storm Water Quality Protection. Palo Alto, CA;
McCuen, R.H. 2003 Smart Growth: hydrologic perspective. Journal of Professional Issues in Engineering Education and Practice. Vol (129), pp.151-154;
Moglen, G.E. and S. Kim. 2007. Impervious imperviousness-are threshold based policies a good idea? Journal of the American Planning Association, Vol 73 No. 2. pp 161-171.
[25] Delaware Department of natural Resources (DDNR). 2004. Green technology: The Delaware urban Runoff Management Approcah. Dover, DE. 117 pp.
[26] Dunne, T and L.B. Leopold. 1978. Water in Environmental Planning. San Francisco W.H. Freeman and Company
[27] Rosgen. D.L. 1996. Applied River Morphology. Pagosa Springs. Wildland Hydrology

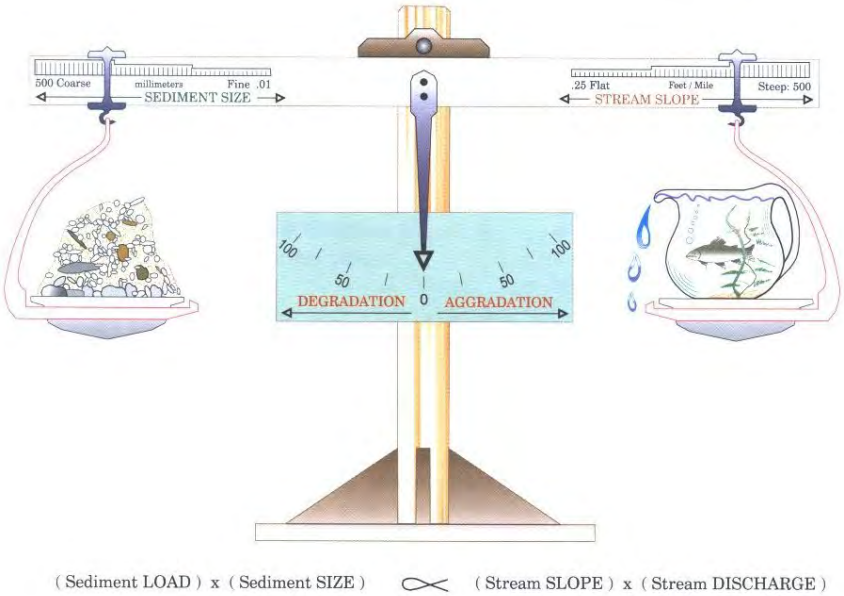

Figure 5 - Schematic of the Lane Relationship

After Lane (1955) as cited in Rosgen (1996)

Stream slope multiplied by stream discharge (the right side of the scale) is essentially an approximation of stream power, a unifying concept in fluvial geomorphology (Bledsoe 1999). Urbanization generally increases stream power and affects the resisting forces in a channel (sediment load and sediment size represented on the left side of the scale).

During construction, sediment loads can increase from 2 to 40,000 times over pre-construction levels.[28] Most of this sediment is delivered to stream channels during large, episodic rain events.[29] This increased sediment load leads to an initial aggradation phase where stream depths may decrease as sediment fills the channel, leading to a decrease in channel capacity and increase in flooding and overbank deposition. A degradation phase initiates after construction is completed.

Schumm et. al (1984) developed a channel evolution model that describes the series of adjustments from initial downcutting, to widening, to establishing new floodplains at lower elevations (Figure 6).

[28] Goldman S.J., K. Jackson, and T.A. Bursztynsky. 1986. Erosion and Sediment Control Handbook. McGraw Hill. San Francisco.

[29] Wolman 1967 as cited in Paul, M.P. and J.L. Meyer. 2001. Streams in the Urban Landscape. *Annu. Rev.Ecol. Syst.* 32: 333-365.

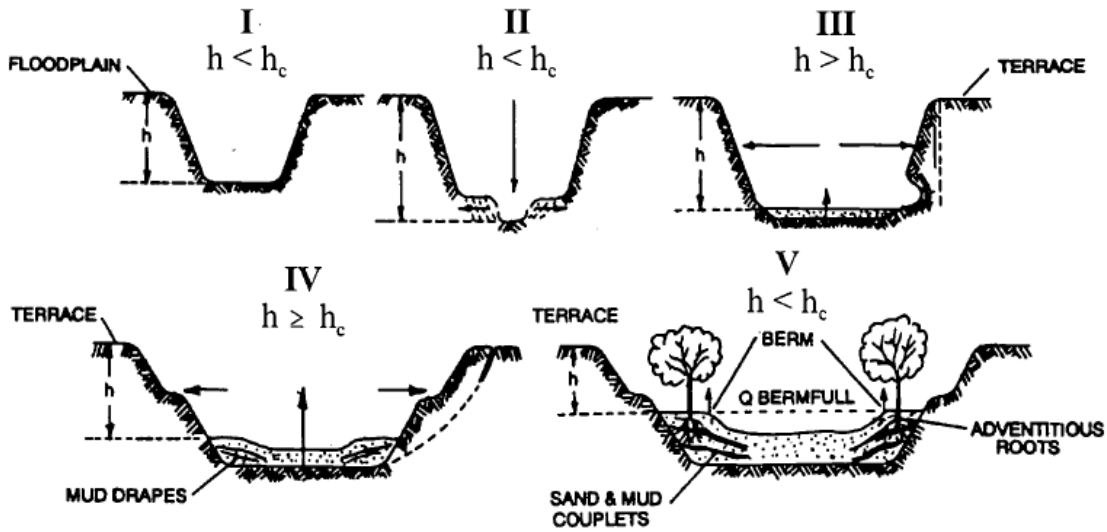

Figure 6 - Channel Changes Associated with Urbanization

After Incised Channel Evolution Sequence in Schumm et. al 1984

Channel incision (Stage II) and widening (Stages III and to a lesser degree, Stage IV) are due to a number of fundamental changes on the landscape. Connected impervious area and compaction of pervious surfaces increase the frequency and volume of bankfull discharges.[30] Increased drainage density (miles of stream length per square mile of watershed) also negatively impacts receiving stream channels.[31] Increased drainage density and hydraulic efficiency leads to an increase in the frequency and volume of bankfull discharges because the time of concentration is shortened. Flows from engineered pipes and channels are also often "sediment starved" and seek to replenish their sediment supply from the channel.

Encroachment of stream channels can also lead to an increase in stream slope, which leads to an increase in stream power. In addition, watershed sediment loads and sediment size (with size generally represented as the median bed and bank particle size, or d_{50}) decrease during urbanization.[32] This means that even if pre- and post-development stream power are the same, more erosion will occur in the post-development stage because the smaller particles are less resistant (provided they are non-cohesive).

---

[30] Booth, D. B. and C. R. Jackson. 1997. Urbanization of Aquatic Systems: Degradation Thresholds, Storm Water Detection, and the Limits of Mitigation. Journal of the American Water Resources Association Vol. 33, No.5, pp. 1077-1089.

[31] May, C.W. 1998. Cumulative effects of urbanization on small streams in the Puget Sound Lowland ecoregion. Conference proceedings from Puget Sound Research '98 held March 12, 13 1998 in Seattle, WA;
Santa Clara Valley Urban Runoff Pollution Prevention Program. 2002. Hydromodification Management Plan Literature Review. 80 pp.

[32] Finkenbine, J.K., D.S. Atwater, and D.S. Mavinic. 2000. Stream health after urbanization. *J. Am. Water Resour. Assoc.* 36:1149-60;
Pizzuto, J.E. W.S. Hession, and M. McBride. 2000. Comparing gravel-bed rivers in paired urban and rural catchments of southeastern Pennsylvania. *Geology* 28:79-82.

As shown in Stages II and III, the channel deepens and widens to accommodate the increased stream power [33]and decrease in sediment load and sediment size. Channels may actually narrow as entrained sediment from incision is deposited laterally in the channel. After incised channels begin to migrate laterally (Stage III), bank erosion begins, which leads to general channel widening.[34] At this point, a majority of the sediment that leaves a drainage area comes from within the channel, as opposed to the background and construction related hillslope contribution. Stage IV is characterized by more aggradation and localized bank instability. Stage V represents a new quasi-equilibrium channel morphology in balance with the new flow and sediment supply regime. In other words, stream power is in balance with sediment load and sediment size.

The magnitude of the channel morphology changes discussed above varies along a stream network as well as with the age of development, slope, geology (sand-bedded channels may cycle through the evolution sequence in a matter of decades whereas clay-dominated channels may take much longer), watershed sediment load and size, type of urbanization, and land use history. It is also dependent on a channel's stage in the channel evolution sequence when urbanization occurs. Management strategies must take into account a channel's stage of adjustment and account for future changes in the evolution of channel form (Stein and Zaleski 2005). [35]

Traditional structural water quality BMPs (e.g. detention basins and other devices used to store volumes of runoff) unless they are highly engineered to provide adequate flow duration control, do not adequately protect receiving waters from accelerated channel bed and bank erosion, do not address post-development increases in runoff volume, and do not mitigate the decline in benthic macroinvertebrate communities in the receiving waters[36] suggest that structural BMPs are not as effective in protecting aquatic communities as a continuous riparian buffer of native vegetation. This is supported by the findings of Zucker and White[37], where instream biological metrics were correlated with the extent of forested buffers.

This General Permit requires dischargers to maintain pre-development drainage densities and times of concentration in order to protect channels and encourages dischargers to implement setbacks to reduce channel slope and velocity changes that can lead to aquatic habitat degradation.

There are a number of other approaches for modeling fluvial systems, including statistical and physical models and simpler stream power models.[38] The use of these models in California is described in Stein and Zaleski (2005).[39] Rather than prescribe a specific one-size-fits-all modeling method in this permit, the State Water Board intends to develop a stream power and channel evolution model-based framework to assess channels and develop a hierarchy of suitable analysis methods and management strategies. In time, this framework may become a State Water Board water quality control policy.

---

[33] Hammer 1973 as cited in Delaware Department of Natural Resources (DDNR). 2004. Green Technology: The Delaware Urban Runoff Management Approach. Dover, DE. 117 pp;
Booth, D.B. 1990. Stream Channel Incision Following Drainage Basin Urbanization. *Water Resour. Bull.* 26:407-417.
[34] Trimble, S.W. 1997. Contribution of Stream Channel Erosion to Sediment Yield from an Urbanizing Watershed. *Science*: Vol. 278 (21), pp. 1442-1444.
[35] Stein, E.S. and S. Zaleski. 2005.Managing runoff to protect natural stream: the latest developments on investigation and management of hydromodification in California. Southern California Coastal Water Research Project Technical Report 475. 26 pp.
[36] Horner, R.R. 2006. Investigation of the Feasibility and Benefits of Low-Impact Site Design Practices (LID) for the San Diego Region. Available at: http://www.projectcleanwater.org/pdf/permit/case-study_lid.pdf.
[37] Delaware Department of Natural Resources (DDNR). 2004. Green Technology: The Delaware Urban Runoff Management Approach. Dover, DE. 117 pp.
[38] Finlayson, D.P. and D.R. Montgomery. 2003. Modeling large-scale fluvial erosion in geographic information systems. Geomorphology (53), pp. 147-164).
[39] Stein, E.S. and S. Zaleski. 2005.Managing runoff to protect natural stream: the latest developments on investigation and management of hydromodification in California. Southern California Coastal Water Research Project Technical Report 475. 26 pp.

Permit Linkage to Overbank and Extreme Flood Protection
Site design BMPs (e.g. rooftop and impervious disconnection, vegetated swales, setbacks and buffers) filter and settle out pollutants and provide for more infiltration than is possible for traditional centralized structural BMPs placed at the lowest point in a site. They provide source control for runoff and lead to a reduction in pollutant loads. When implemented, they also help reduce the magnitude and volume of larger, less frequent storm events (e.g., 10-yr, 24-hour storm and larger), thereby reducing the need for expensive flood control infrastructure. Nonstructural BMPs can also be a landscape amenity, instead of a large isolated structure requiring substantial area for ancillary access, buffering, screening and maintenance facilities.[25] The multiple benefits of using non-structural benefits will be critically important as the state's population increases and imposes strains upon our existing water resources.

Maintaining predevelopment drainage densities and times of concentration will help reduce post-development peak flows and volumes in areas not covered under a municipal permit. The most effective way to preserve drainage areas and maximize time of concentration is to implement landform grading, incorporate site design BMPs and implement distributed structural BMPs (e.g., bioretention cells, rain gardens, rain cisterns).

M. Storm Water Pollution Prevention Plans

USEPA's Construction General Permit requires that qualified personnel conduct inspections. USEPA defines qualified personnel as "a person knowledgeable in the principles and practice of erosion and sediment controls who possesses the skills to assess conditions at the construction site that could impact storm water quality and to assess the effectiveness of any sediment and erosion control measures selected to control the quality of storm water discharges from the construction activity."[40] USEPA also suggests that qualified personnel prepare SWPPPs and points to numerous states that require certified professionals to be on construction sites at all times. States that currently have certification programs are Washington, Georgia, Florida, Delaware, Maryland, and New Jersey. The Permit 99-08-DWQ did not require that qualified personnel prepare SWPPPs or conduct inspections. However, to ensure that water quality is being protected, this General Permit requires that all SWPPPs be written, amended, and certified by a Qualified SWPPP Developer. A Qualified SWPPP Developer must possess one of the eight certifications and or registrations specified in this General Permit and effective two years after the adoption date of this General Permit, must have attended a State Water Board-sponsored or approved Qualified SWPPP Developer training course. Table 9 provides an overview of the criteria used in determining qualified certification titles for a QSD and QSP.

---

40 US Environmental Protection Agency. Stormwater Pollution Prevention Plans for Construction Activities. <http://cfpub.epa.gov/npdes/stormwater/swppp.cfm> and <http://www.epa.gov/npdes/pubs/sw_swppp_guide.pdf>.

Table 9 - Qualified SWPPP Developer/ Qualified SWPPP Practitioner Certification Criteria

Certification/ Title	Registered By	QSD/QSP	Certification Criteria
Professional Civil Engineer	California	Both	1. Approval Process 2. Code of Ethics 3. Accountability 4. Pre-requisites
Professional Geologist or Engineering Geologist	California	Both	1. Approval Process 2. Code of Ethics 3. Accountability 4. Pre-requisites
Landscape Architect	California	Both	1. Approval Process 2. Code of Ethics 3. Accountability 4. Pre-requisites
Professional Hydrologist	American Institute of Hydrology	Both	1. Approval Process 2. Code of Ethics 3. Accountability 4. Pre-requisites
Certified Professional in Erosion and Sediment Control™ (CPESC)	Enviro Cert International Inc.	Both	1. Approval Process 2. Code of Ethics 3. Accountability 4. Pre-requisites 5. Continuing Education
Certified Inspector of Sediment and Erosion Control™ (CISEC)	Certified Inspector of Sediment and Erosion Control, Inc.	QSP	1. Approval Process 2. Code of Ethics 3. Accountability 4. Pre-requisites 5. Continuing Education
Certified Erosion, Sediment and Storm Water Inspector™ (CESSWI)	Enviro Cert International Inc.	QSP	1. Approval Process 2. Code of Ethics 3. Accountability 4. Pre-requisites 5. Continuing Education
Certified Professional in Storm Water Quality™ (CPSWQ)	Enviro Cert International Inc.	Both	1. Approval Process 2. Code of Ethics 3. Accountability 4. Pre-requisites 5. Continuing Education

The previous versions of the General Permit required development and implementation of a SWPPP as the primary compliance mechanism. The SWPPP has two major objectives: (1) to help identify the sources of sediment and other pollutants that affect the quality of storm water discharges; and (2) to describe and ensure the implementation of BMPs to reduce or eliminate sediment and other pollutants in storm water and non-storm water discharges. The SWPPP must include BMPs that address source control, BMPs that address pollutant control, and BMPs that address treatment control.

This General Permit shifts some of the measures that were covered by this general requirement to specific permit requirements, each individually enforceable as a permit term. This General Permit emphasizes the use of appropriately selected, correctly installed and maintained pollution reduction BMPs. This approach provides the flexibility necessary to establish BMPs that can effectively address source control of pollutants during changing construction activities. These specific requirements also improve both the clarity and the enforceability of the General Permit so that the dischargers understand, and the public can determine whether the discharges are in compliance with, permit requirements.

The SWPPP must be implemented at the appropriate level to protect water quality at all times throughout the life of the project. The SWPPP must remain on the site during construction activities, commencing with the initial mobilization and ending with the termination of coverage under the General Permit. For LUPs the discharger shall make the SWPPP available at the construction site during working hours while construction is occurring and shall be made available upon request by a State or Municipal inspector. When the original SWPPP is retained by a crewmember in a construction vehicle and is not currently at the construction site, current copies of the BMPs and map/drawing will be left with the field crew and the original SWPPP shall be made available via a request by radio or telephone. Once construction activities are complete, until stabilization is achieved, the SWPPP shall be available from the SWPPP contact listed in the PRDs

A SWPPP must be appropriate for the type and complexity of a project and will be developed and implemented to address project specific conditions. Some projects may have similarities or complexities, yet each project is unique in its progressive state that requires specific description and selection of BMPs needed to address all possible generated pollutants

N. Regional Water Board Authorities

Because this General Permit will be issued to thousands of construction sites across the State, the Regional Water Boards retain discretionary authority over certain issues that may arise from the discharges in their respective regions. This General Permit does not grant the Regional Water Boards any authority they do not otherwise have; rather, it merely emphasizes that the Regional Water Boards can take specific actions related to this General Permit. For example, the Regional Water Boards will be enforcing this General Permit and may need to adjust some requirements for a discharger based on the discharger's compliance history.

Linda S. Adams
Secretary for Environmental Protection

State Water Resources Control Board

Division of Water Quality
1001 I Street • Sacramento, California 95814 • (916) 341-5455
Mailing Address: P.O. Box 100 • Sacramento, California • 95812-0100
Fax (916) 341-5463 • http://www.waterboards.ca.gov

Arnold Schwarzenegger
Governor

NATIONAL POLLUTANT DISCHARGE ELIMINATION SYSTEM (NPDES)
GENERAL PERMIT FOR
STORM WATER DISCHARGES
ASSOCIATED WITH CONSTRUCTION AND LAND DISTURBANCE
ACTIVITIES

ORDER NO. 2009-0009-DWQ
NPDES NO**. CAS000002**

This Order was adopted by the State Water Resources Control Board on:	**September 2, 2009**
This Order shall become effective on:	**July 1, 2010**
This Order shall expire on:	**September 2, 2014**

IT IS HEREBY ORDERED, that this Order supersedes Order No. 99-08-DWQ [as amended by Order No. 2010-0014-DWQ] except for enforcement purposes. The Discharger shall comply with the requirements in this Order to meet the provisions contained in Division 7 of the California Water Code (commencing with section 13000) and regulations adopted thereunder, and the provisions of the federal Clean Water Act and regulations and guidelines adopted thereunder.

I, Jeanine Townsend, Clerk to the Board, do hereby certify that this Order with all attachments is a full, true, and correct copy of an Order adopted by the State Water Resources Control Board, on September 2, 2009.

AYE: Vice Chair Frances Spivy-Weber
Board Member Arthur G. Baggett, Jr.
Board Member Tam M. Doduc

NAY: Chairman Charles R. Hoppin

ABSENT: None

ABSTAIN: None

Jeanine Townsend

Jeanine Townsend
Clerk to the Board

Linda S. Adams
Secretary for Environmental Protection

State Water Resources Control Board

Division of Water Quality
1001 I Street • Sacramento, California 95814 • (916) 341-5455
Mailing Address: P.O. Box 100 • Sacramento, California • 95812-0100
Fax (916) 341-5463 • http://www.waterboards.ca.gov

Arnold Schwarzenegger
Governor

NATIONAL POLLUTANT DISCHARGE ELIMINATION SYSTEM (NPDES) GENERAL PERMIT FOR STORM WATER DISCHARGES ASSOCIATED WITH CONSTRUCTION AND LAND DISTURBANCE ACTIVITIES

ORDER NO. 2010-0014-DWQ
NPDES NO. CAS000002

Order No. 2009-0009-DWQ was adopted by the State Water Resources Control Board on:	**September 2, 2009**
Order No. 2009-0009-DWQ became effective on:	**July 1, 2010**
Order No. 2009-0009-DWQ shall expire on:	**September 2, 2014**
This Order, which amends Order No. 2009-0009-DWQ, was adopted by the State Water Resources Control Board on:	**November 16, 2010**
This Order shall become effective on:	**February 14, 2011**

IT IS HEREBY ORDERED that this Order amends Order No. 2009-0009-DWQ. Additions to Order No. 2009-0009-DWQ are reflected in blue-underline text and deletions are reflected in red-strikeout text.

IT IS FURTHER ORDERED that staff are directed to prepare and post a conformed copy of Order No. 2009-0009-DWQ incorporating the revisions made by this Order.

I, Jeanine Townsend, Clerk to the Board, do hereby certify that this Order with all attachments is a full, true, and correct copy of an Order adopted by the State Water Resources Control Board, on **November 16, 2010.**

AYE: Chairman Charles R. Hoppin
Vice Chair Frances Spivy-Weber
Board Member Arthur G. Baggett, Jr.
Board Member Tam M. Doduc

NAY: None

ABSENT: None

ABSTAIN: None

Jeanine Townsend

Jeanine Townsend
Clerk to the Board

TABLE OF CONTENTS

I. FINDINGS 1
II. CONDITIONS FOR PERMIT COVERAGE 14
III. DISCHARGE PROHIBITIONS 20
IV. SPECIAL PROVISIONS 22
V. EFFLUENT STANDARDS 28
VI. RECEIVING WATER LIMITATIONS 31
VII. TRAINING QUALIFICATIONS AND CERTIFICATION REQUIREMENTS 32
VIII. RISK DETERMINATION 33
IX. RISK LEVEL 1 REQUIREMENTS 34
X. RISK LEVEL 2 REQUIREMENTS 34
XI. RISK LEVEL 3 REQUIREMENTS 34
XII. ACTIVE TREATMENT SYSTEMS (ATS) 34
XIII. POST-CONSTRUCTION STANDARDS 35
XIV. SWPPP REQUIREMENTS 37
XV. REGIONAL WATER BOARD AUTHORITIES 38
XVI. ANNUAL REPORTING REQUIREMENTS 39

LIST OF ATTACHMENTS

Attachment A – Linear Underground/Overhead Requirements
Attachment A.1 – LUP Type Determination
Attachment A.2 – LUP Permit Registration Documents
Attachment B – Permit Registration Documents
Attachment C – Risk Level 1 Requirements
Attachment D – Risk Level 2 Requirements
Attachment E – Risk Level 3 Requirements
Attachment F – Active Treatment System (ATS) Requirements

LIST OF APPENDICES

Appendix 1 – Risk Determination Worksheet
Appendix 2 – Post-Construction Water Balance Performance Standard
Appendix 2.1 – Post-Construction Water Balance Performance Standard Spreadsheet
Appendix 3 – Bioassessment Monitoring Guidelines
Appendix 4 – Adopted/Implemented Sediment TMDLs
Appendix 5 – Glossary
Appendix 6 – Acronyms
Appendix 7 – State and Regional Water Resources Control Board Contacts

STATE WATER RESOURCES CONTROL BOARD
ORDER NO. 2009-0009-DWQ
[AS AMENDED BY ORDER NO. 2010-0014-DWQ]
NATIONAL POLLUTANT DISCHARGE ELIMINATION SYSTEM
GENERAL PERMIT NO. CAS000002

WASTE DISCHARGE REQUIREMENTS
FOR
DISCHARGES OF STORM WATER RUNOFF ASSOCIATED WITH
CONSTRUCTION AND LAND DISTURBANCE ACTIVITIES

I. FINDINGS

A. General Findings

The State Water Resources Control Board (State Water Board) finds that:

1. The federal Clean Water Act (CWA) prohibits certain discharges of storm water containing pollutants except in compliance with a National Pollutant Discharge Elimination System (NPDES) permit (Title 33 United States Code (U.S.C.) §§ 1311 and 1342(p); also referred to as Clean Water Act (CWA) §§ 301 and 402(p)). The U.S. Environmental Protection Agency (U.S. EPA) promulgates federal regulations to implement the CWA's mandate to control pollutants in storm water runoff discharges. (Title 40 Code of Federal Regulations (C.F.R.) Parts 122, 123, and 124). The federal statutes and regulations require discharges to surface waters comprised of storm water associated with construction activity, including demolition, clearing, grading, and excavation, and other land disturbance activities (except operations that result in disturbance of less than one acre of total land area and which are not part of a larger common plan of development or sale), to obtain coverage under an NPDES permit. The NPDES permit must require implementation of Best Available Technology Economically Achievable (BAT) and Best Conventional Pollutant Control Technology (BCT) to reduce or eliminate pollutants in storm water runoff. The NPDES permit must also include additional requirements necessary to implement applicable water quality standards.

2. This General Permit authorizes discharges of storm water associated with construction activity so long as the dischargers comply with all requirements, provisions, limitations and prohibitions in the permit. In addition, this General Permit regulates the discharges of storm water associated with construction activities from all Linear

Underground/Overhead Projects resulting in the disturbance of greater than or equal to one acre (Attachment A).

3. This General Permit regulates discharges of pollutants in storm water associated with construction activity (storm water discharges) to waters of the United States from construction sites that disturb one or more acres of land surface, or that are part of a common plan of development or sale that disturbs more than one acre of land surface.

4. This General Permit does not preempt or supersede the authority of local storm water management agencies to prohibit, restrict, or control storm water discharges to municipal separate storm sewer systems or other watercourses within their jurisdictions.

5. This action to adopt a general NPDES permit is exempt from the provisions of Chapter 3 of the California Environmental Quality Act (CEQA) (Public Resources Code Section 21100, et seq.), pursuant to Section 13389 of the California Water Code.

6. Pursuant to 40 C.F.R. § 131.12 and State Water Board Resolution No. 68-16,[1] which incorporates the requirements of § 131.12 where applicable, the State Water Board finds that discharges in compliance with this General Permit will not result in the lowering of water quality standards, and are therefore consistent with those provisions. Compliance with this General Permit will result in improvements in water quality.

7. This General Permit serves as an NPDES permit in compliance with CWA § 402 and will take effect on July 1, 2010 by the State Water Board provided the Regional Administrator of the U.S. EPA has no objection. If the U.S. EPA Regional Administrator objects to its issuance, the General Permit will not become effective until such objection is withdrawn.

8. Following adoption and upon the effective date of this General Permit, the Regional Water Quality Control Boards (Regional Water Boards) shall enforce the provisions herein.

9. Regional Water Boards establish water quality standards in Basin Plans. The State Water Board establishes water quality standards in various statewide plans, including the California Ocean Plan. U.S. EPA establishes water quality standards in the National Toxic Rule (NTR) and the California Toxic Rule (CTR).

[1] Resolution No. 68-16 generally requires that existing water quality be maintained unless degradation is justified based on specific findings.

10. This General Permit does not authorize discharges of fill or dredged material regulated by the U.S. Army Corps of Engineers under CWA § 404 and does not constitute a waiver of water quality certification under CWA § 401.

11. The primary storm water pollutant at construction sites is excess sediment. Excess sediment can cloud the water, which reduces the amount of sunlight reaching aquatic plants, clog fish gills, smother aquatic habitat and spawning areas, and impede navigation in our waterways. Sediment also transports other pollutants such as nutrients, metals, and oils and greases.

12. Construction activities can impact a construction site's runoff sediment supply and transport characteristics. These modifications, which can occur both during and after the construction phase, are a significant cause of degradation of the beneficial uses established for water bodies in California. Dischargers can avoid these effects through better construction site design and activity practices.

13. This General Permit recognizes four distinct phases of construction activities. The phases are Grading and Land Development Phase, Streets and Utilities Phase, Vertical Construction Phase, and Final Landscaping and Site Stabilization Phase. Each phase has activities that can result in different water quality effects from different water quality pollutants. This General Permit also recognizes inactive construction as a category of construction site type.

14. Compliance with any specific limits or requirements contained in this General Permit does not constitute compliance with any other applicable requirements.

15. Following public notice in accordance with State and Federal laws and regulations, the State Water Board heard and considered all comments and testimony in a public hearing on 06/03/2009. The State Water Board has prepared written responses to all significant comments.

16. Construction activities obtaining coverage under the General Permit may have multiple discharges subject to requirements that are specific to general, linear, and/or active treatment system discharge types.

17. The State Water Board may reopen the permit if the U.S. EPA adopts a final effluent limitation guideline for construction activities.

B. Activities Covered Under the General Permit

18. Any construction or demolition activity, including, but not limited to, clearing, grading, grubbing, or excavation, or any other activity that results in a land disturbance of equal to or greater than one acre.

19. Construction activity that results in land surface disturbances of less than one acre if the construction activity is part of a larger common plan of development or the sale of one or more acres of disturbed land surface.

20. Construction activity related to residential, commercial, or industrial development on lands currently used for agriculture including, but not limited to, the construction of buildings related to agriculture that are considered industrial pursuant to U.S. EPA regulations, such as dairy barns or food processing facilities.

21. Construction activity associated with Linear Underground/Overhead Utility Projects (LUPs) including, but not limited to, those activities necessary for the installation of underground and overhead linear facilities (e.g., conduits, substructures, pipelines, towers, poles, cables, wires, connectors, switching, regulating and transforming equipment and associated ancillary facilities) and include, but are not limited to, underground utility mark-out, potholing, concrete and asphalt cutting and removal, trenching, excavation, boring and drilling, access road and pole/tower pad and cable/wire pull station, substation construction, substructure installation, construction of tower footings and/or foundations, pole and tower installations, pipeline installations, welding, concrete and/or pavement repair or replacement, and stockpile/borrow locations.

22. Discharges of sediment from construction activities associated with oil and gas exploration, production, processing, or treatment operations or transmission facilities.[2]

23. Storm water discharges from dredge spoil placement that occur outside of U.S. Army Corps of Engineers jurisdiction (upland sites) and that disturb one or more acres of land surface from construction activity are covered by this General Permit. Construction sites that intend to disturb one or more acres of land within the jurisdictional boundaries of

[2] Pursuant to the Ninth Circuit Court of Appeals' decision in *NRDC v. EPA* (9th Cir. 2008) 526 F.3d 591, and subsequent denial of the U.S. EPA's petition for reconsideration in November 2008, oil and gas construction activities discharging storm water contaminated only with sediment are no longer exempt from the NPDES program.

a CWA § 404 permit should contact the appropriate Regional Water Board to determine whether this permit applies to the site.

C. Activities Not Covered Under the General Permit

24. Routine maintenance to maintain original line and grade, hydraulic capacity, or original purpose of the facility.

25. Disturbances to land surfaces solely related to agricultural operations such as disking, harrowing, terracing and leveling, and soil preparation.

26. Discharges of storm water from areas on tribal lands; construction on tribal lands is regulated by a federal permit.

27. Construction activity and land disturbance involving discharges of storm water within the Lake Tahoe Hydrologic Unit. The Lahontan Regional Water Board has adopted its own permit to regulate storm water discharges from construction activity in the Lake Tahoe Hydrologic Unit (Regional Water Board 6SLT). Owners of construction sites in this watershed must apply for the Lahontan Regional Water Board permit rather than the statewide Construction General Permit.

28. Construction activity that disturbs less than one acre of land surface, and that is not part of a larger common plan of development or the sale of one or more acres of disturbed land surface.

29. Construction activity covered by an individual NPDES Permit for storm water discharges.

30. Discharges from small (1 to 5 acre) construction activities with an approved Rainfall Erosivity Waiver authorized by U.S. EPA Phase II regulations certifying to the State Board that small construction activity will occur only when the Rainfall Erosivity Factor is less than 5 (“R” in the Revised Universal Soil Loss Equation).

31. Landfill construction activity that is subject to the Industrial General Permit.

32. Construction activity that discharges to Combined Sewer Systems.

33. Conveyances that discharge storm water runoff combined with municipal sewage.

34. Discharges of storm water identified in CWA § 402(*l*)(2), 33 U.S.C. § 1342(*l*)(2).

35. Discharges occurring in basins that are not tributary or hydrologically connected to waters of the United States (for more information contact your Regional Water Board).

D. Obtaining and Modifying General Permit Coverage

36. This General Permit requires all dischargers to electronically file all Permit Registration Documents (PRDs), Notices of Termination (NOT), changes of information, annual reporting, and other compliance documents required by this General Permit through the State Water Board's Storm water Multi-Application and Report Tracking System (SMARTS) website.

37. Any information provided to the Regional Water Board shall comply with the Homeland Security Act and any other federal law that concerns security in the United States; any information that does not comply should not be submitted.

38. This General Permit grants an exception from the Risk Determination requirements for existing sites covered under Water Quality Orders No. 99-08-DWQ, and No. 2003-0007-DWQ. For certain sites, adding additional requirements may not be cost effective. Construction sites covered under Water Quality Order No. 99-08-DWQ shall obtain permit coverage at the Risk Level 1. LUPs covered under Water Quality Order No. 2003-0007-DWQ shall obtain permit coverage as a Type 1 LUP. The Regional Water Boards have the authority to require Risk Determination to be performed on sites currently covered under Water Quality Orders No. 99-08-DWQ and No. 2003-0007-DWQ where they deem it necessary. The State Water Board finds that there are two circumstances when it may be appropriate for the Regional Water Boards to require a discharger that had filed an NOI under State Water Board Order No. 99-08-DWQ to recalculate the site's risk level. These circumstances are: (1) when the discharger has a demonstrated history of noncompliance with State Water Board Order No. 99-08-DWQ or; (2) when the discharger's site poses a significant risk of causing or contributing to an exceedance of a water quality standard without the implementation of the additional Risk Level 2 or 3 requirements.

E. Prohibitions

39. All discharges are prohibited except for the storm water and non-storm water discharges specifically authorized by this General Permit or another NPDES permit. Non-storm water discharges include a wide variety of sources, including improper dumping, spills, or leakage from storage tanks or transfer areas. Non-storm water discharges may

contribute significant pollutant loads to receiving waters. Measures to control spills, leakage, and dumping, and to prevent illicit connections during construction must be addressed through structural as well as non-structural Best Management Practices (BMPs)[3]. The State Water Board recognizes, however, that certain non-storm water discharges may be necessary for the completion of construction.

40. This General Permit prohibits all discharges which contain a hazardous substance in excess of reportable quantities established in 40 C.F.R. §§ 117.3 and 302.4, unless a separate NPDES Permit has been issued to regulate those discharges.

41. This General Permit incorporates discharge prohibitions contained in water quality control plans, as implemented by the State Water Board and the nine Regional Water Boards.

42. Pursuant to the Ocean Plan, discharges to Areas of Special Biological Significance (ASBS) are prohibited unless covered by an exception that the State Water Board has approved.

43. This General Permit prohibits the discharge of any debris[4] from construction sites. Plastic and other trash materials can cause negative impacts to receiving water beneficial uses. The State Water Board encourages the use of more environmentally safe, biodegradable materials on construction sites to minimize the potential risk to water quality.

F. Training

44. In order to improve compliance with and to maintain consistent enforcement of this General Permit, all dischargers are required to appoint two positions - the Qualified SWPPP Developer (QSD) and the Qualified SWPPP Practitioner (QSP) - who must obtain appropriate training. Together with the key stakeholders, the State and Regional Water Boards are leading the development of this curriculum through a collaborative organization called The Construction General Permit (CGP) Training Team.

45. The Professional Engineers Act (Bus. & Prof. Code section 6700, et seq.) requires that all engineering work must be performed by a California licensed engineer.

---

[3] BMPs are scheduling of activities, prohibitions of practices, maintenance procedures, and other management practices to prevent or reduce the discharge of pollutants to waters of the United States. BMPs also include treatment requirements, operating procedures, and practice to control site runoff, spillage or leaks, sludge or waste disposal, or drainage from raw material storage.

[4] Litter, rubble, discarded refuse, and remains of destroyed inorganic anthropogenic waste.

G. Determining and Reducing Risk

46. The risk of accelerated erosion and sedimentation from wind and water depends on a number of factors, including proximity to receiving water bodies, climate, topography, and soil type.

47. This General Permit requires dischargers to assess the risk level of a site based on both sediment transport and receiving water risk. This General Permit contains requirements for Risk Levels 1, 2 and 3, and LUP Risk Type 1, 2, and 3 (Attachment A). Risk levels are established by determining two factors: first, calculating the site's sediment risk; and second, receiving water risk during periods of soil exposure (i.e. grading and site stabilization). Both factors are used to determine the site-specific Risk Level(s). LUPs can be determined to be Type 1 based on the flowchart in Attachment A.1.

48. Although this General Permit does not mandate specific setback distances, dischargers are encouraged to set back their construction activities from streams and wetlands whenever feasible to reduce the risk of impacting water quality (e.g., natural stream stability and habitat function). Because there is a reduced risk to receiving waters when setbacks are used, this General Permit gives credit to setbacks in the risk determination and post-construction storm water performance standards. The risk calculation and runoff reduction mechanisms in this General Permit are expected to facilitate compliance with any Regional Water Board and local agency setback requirements, and to encourage voluntary setbacks wherever practicable.

49. Rain events can occur at any time of the year in California. Therefore, a Rain Event Action Plan (REAP) is necessary for Risk Level 2 and 3 traditional construction projects (LUPs exempt) to ensure that active construction sites have adequate erosion and sediment controls implemented prior to the onset of a storm event, even if construction is planned only during the dry season.

50. Soil particles smaller than 0.02 millimeters (mm) (i.e., finer than medium silt) do not settle easily using conventional measures for sediment control (i.e., sediment basins). Given their long settling time, dislodging these soils results in a significant risk that fine particles will be released into surface waters and cause unacceptable downstream impacts. If operated correctly, an Active Treatment System (ATS[5]) can prevent or reduce the release of fine particles from construction sites.

[5] An ATS is a treatment system that employs chemical coagulation, chemical flocculation, or electro coagulation in order to reduce turbidity caused by fine suspended sediment.

Use of an ATS can effectively reduce a site's risk of impacting receiving waters.

51. Dischargers located in a watershed area where a Total Maximum Daily Load (TMDL) has been adopted or approved by the Regional Water Board or U.S. EPA may be required by a separate Regional Water Board action to implement additional BMPs, conduct additional monitoring activities, and/or comply with an applicable waste load allocation and implementation schedule. Such dischargers may also be required to obtain an individual Regional Water Board permit specific to the area.

H. Effluent Standards

52. The State Water Board convened a blue ribbon panel of storm water experts that submitted a report entitled, “The Feasibility of Numeric Effluent Limits Applicable to Discharges of Storm Water Associated with Municipal, Industrial and Construction Activities,” dated June 19, 2006. The panel concluded that numeric limits or action levels are technically feasible to control construction storm water discharges, provided that certain conditions are considered. The panel also concluded that numeric effluent limitations (NELs) are feasible for discharges from construction sites that utilize an ATS. The State Water Board has incorporated the expert panel’s suggestions into this General Permit, which includes both numeric action levels (NALs) and NELs for pH and turbidity, and special numeric limits for ATS discharges.

Numeric Effluent Limitations

53. Discharges of storm water from construction activities may become contaminated from alkaline construction materials resulting in high pH (greater than pH 7). Alkaline construction materials include, but are not limited to, hydrated lime, concrete, mortar, cement kiln dust (CKD), Portland cement treated base (CTB), fly ash, recycled concrete, and masonry work. This General Permit includes an NEL for pH (6.0-9.0) that applies only at sites that exhibit a "high risk of high pH discharge." A "high risk of high pH discharge" can occur during the complete utilities phase, the complete vertical build phase, and any portion of any phase where significant amounts of materials are placed directly on the land at the site in a manner that could result in significant alterations to the background pH of any discharges.

54. For Risk Level 3 discharges, this General Permit establishes technology-based, numeric effluent limitations (NELs) for turbidity of 500 NTU. Exceedances of the turbidity NEL constitutes a violation of this General Permit.

55. This General Permit establishes a 5 year, 24 hour (expressed in inches of rainfall) Compliance Storm Event exemption from the technology-based NELs for Risk Level 3 dischargers.

Determining Compliance with Numeric Limitations

56. This General Permit sets a pH NAL of 6.5 to 8.5, and a turbidity NAL of 250 NTU. The purpose of the NAL and its associated monitoring requirement is to provide operational information regarding the performance of the measures used at the site to minimize the discharge of pollutants and to protect beneficial uses and receiving waters from the adverse effects of construction-related storm water discharges. The NALs in this General Permit for pH and turbidity are not directly enforceable and do not constitute NELs.

57. This General Permit requires dischargers with NAL exceedances to immediately implement additional BMPs and revise their Storm Water Pollution Prevention Plans (SWPPPs) accordingly to either prevent pollutants and authorized non-storm water discharges from contaminating storm water, or to substantially reduce the pollutants to levels consistently below the NALs. NAL exceedances are reported in the State Water Boards SMARTS system, and the discharger is required to provide an NAL Exceedance Report when requested by a Regional Water Board.

58. If run-on is caused by a forest fire or any other natural disaster, then NELs do not apply.

59. Exceedances of the NELs are a violation of this Permit. This General Permit requires dischargers with NEL exceedances to implement additional monitoring, BMPs, and revise their SWPPPs accordingly. Dischargers are required to notify the State and Regional Water Boards of the violation through the State Water Boards SMARTs system, and provide an NEL Violation Report sharing additional information concerning the NEL exceedance.

I. Receiving Water Limitations

60. This General Permit requires all enrolled dischargers to determine the receiving waters potentially affected by their discharges and to comply with all applicable water quality standards, including any more stringent standards applicable to a water body.

J. Sampling, Monitoring, Reporting and Record Keeping

61. Visual monitoring of storm water and non-storm water discharges is required for all sites subject to this General Permit.

62. Records of all visual monitoring inspections are required to remain on-site during the construction period and for a minimum of three years.

63. For all Risk Level 3 and Risk Level 2 sites, this General Permit requires effluent monitoring for pH and turbidity. Sampling, analysis and monitoring requirements for effluent monitoring for pH and turbidity are contained in this General Permit.

64. Risk Level 3 sites in violation of the Numeric Effluent Limitations contained in this General Permit and with direct discharges to receiving water are required to conduct receiving water monitoring.

65. For Risk Level 3 sites larger than 30 acres and with direct discharges to receiving waters, this General Permit requires bioassessment sampling before and after site completion to determine if significant degradation to the receiving water's biota has occurred. Bioassessment sampling guidelines are contained in this General Permit.

66. A summary and evaluation of the sampling and analysis results will be submitted in the Annual Reports.

67. This General Permit contains sampling, analysis and monitoring requirements for non-visible pollutants at all sites subject to this General Permit.

68. Compliance with the General Permit relies upon dischargers to electronically self-report any discharge violations and to comply with any Regional Water Board enforcement actions.

69. This General Permit requires that all dischargers maintain a paper or electronic copy of all required records for three years from the date generated or date submitted, whichever is last. These records must be available at the construction site until construction is completed. For LUPs, these documents may be retained in a crew member's vehicle and made available upon request.

K. Active Treatment System (ATS) Requirements

70. Active treatment systems add chemicals to facilitate flocculation, coagulation and filtration of suspended sediment particles. The uncontrolled release of these chemicals to the environment can negatively affect the beneficial uses of receiving waters and/or degrade water quality (e.g., acute and chronic toxicity). Additionally, the batch storage and treatment of storm water through an ATS' can potentially

cause physical impacts on receiving waters if storage volume is inadequate or due to sudden releases of the ATS batches and improperly designed outfalls.

71. If designed, operated and maintained properly an ATS can achieve very high removal rates of suspended sediment (measured as turbidity), albeit at sometimes significantly higher costs than traditional erosion/sediment control practices. As a result, this General Permit establishes NELs consistent with the expected level of typical ATS performance.

72. This General Permit requires discharges of storm water associated with construction activity that undergo active treatment to comply with special operational and effluent limitations to ensure that these discharges do not adversely affect the beneficial uses of the receiving waters or cause degradation of their water quality.

73. For ATS discharges, this General Permit establishes technology-based NELs for turbidity.

74. This General Permit establishes a 10 year, 24 hour (expressed in inches of rainfall) Compliance Storm Event exemption from the technology-based numeric effluent limitations for ATS discharges. Exceedances of the ATS turbidity NEL constitutes a violation of this General Permit.

L. Post-Construction Requirements

75. This General Permit includes performance standards for post-construction that are consistent with State Water Board Resolution No. 2005-0006, "Resolution Adopting the Concept of Sustainability as a Core Value for State Water Board Programs and Directing Its Incorporation," and 2008-0030, “Requiring Sustainable Water Resources Management.“ The requirement for all construction sites to match pre-project hydrology will help ensure that the physical and biological integrity of aquatic ecosystems are sustained. This “runoff reduction” approach is analogous in principle to Low Impact Development (LID) and will serve to protect related watersheds and waterbodies from both hydrologic-based and pollution impacts associated with the post-construction landscape.

76. LUP projects are not subject to post-construction requirements due to the nature of their construction to return project sites to pre-construction conditions.

M. Storm Water Pollution Prevention Plan Requirements

77. This General Permit requires the development of a site-specific SWPPP. The SWPPP must include the information needed to demonstrate compliance with all requirements of this General Permit, and must be kept on the construction site and be available for review. The discharger shall ensure that a QSD develops the SWPPP.

78. To ensure proper site oversight, this General Permit requires a Qualified SWPPP Practitioner to oversee implementation of the BMPs required to comply with this General Permit.

N. Regional Water Board Authorities

79. Regional Water Boards are responsible for implementation and enforcement of this General Permit. A general approach to permitting is not always suitable for every construction site and environmental circumstances. Therefore, this General Permit recognizes that Regional Water Boards must have some flexibility and authority to alter, approve, exempt, or rescind permit authority granted under this General Permit in order to protect the beneficial uses of our receiving waters and prevent degradation of water quality.

IT IS HEREBY ORDERED that all dischargers subject to this General Permit shall comply with the following conditions and requirements (including all conditions and requirements as set forth in Attachments A, B, C, D, E and F)[6]:

II. CONDITIONS FOR PERMIT COVERAGE

A. Linear Underground/Overhead Projects (LUPs)

1. Linear Underground/Overhead Projects (LUPs) include, but are not limited to, any conveyance, pipe, or pipeline for the transportation of any gaseous, liquid (including water and wastewater for domestic municipal services), liquescent, or slurry substance; any cable line or wire for the transmission of electrical energy; any cable line or wire for communications (e.g. telephone, telegraph, radio or television messages); and associated ancillary facilities. Construction activities associated with LUPs include, but are not limited to, (a) those activities necessary for the installation of underground and overhead linear facilities (e.g., conduits, substructures, pipelines, towers, poles, cables, wires, connectors, switching, regulating and transforming equipment, and associated ancillary facilities); and include, but are not limited to, (b) underground utility mark-out, potholing, concrete and asphalt cutting and removal, trenching, excavation, boring and drilling, access road and pole/tower pad and cable/wire pull station, substation construction, substructure installation, construction of tower footings and/or foundations, pole and tower installations, pipeline installations, welding, concrete and/ or pavement repair or replacement, and stockpile/borrow locations.

2. The Legally Responsible Person is responsible for obtaining coverage under the General Permit where the construction of pipelines, utility lines, fiber-optic cables, or other linear underground/overhead projects will occur across several properties unless the LUP construction activities are covered under another construction storm water permit.

3. Only LUPs shall comply with the conditions and requirements in Attachment A, A.1 & A.2 of this Order. The balance of this Order is not applicable to LUPs except as indicated in Attachment A.

[6] These attachments are part of the General Permit itself and are not separate documents that are capable of being updated independently by the State Water Board.

B. Obtaining Permit Coverage Traditional Construction Sites

1. The Legally Responsible Person (LRP) (see Special Provisions, Electronic Signature and Certification Requirements, Section IV.I.1) must obtain coverage under this General Permit.

2. To obtain coverage, the LRP must electronically file Permit Registration Documents (PRDs) prior to the commencement of construction activity. Failure to obtain coverage under this General Permit for storm water discharges to waters of the United States is a violation of the CWA and the California Water Code.

3. PRDs shall consist of:

   a. Notice of Intent (NOI)
   b. Risk Assessment (Section VIII)
   c. Site Map
   d. Storm Water Pollution Prevention Plan (Section XIV)
   e. Annual Fee
   f. Signed Certification Statement

   Any information provided to the Regional Water Board shall comply with the Homeland Security Act and any other federal law that concerns security in the United States; any information that does not comply should not be submitted.

   Attachment B contains additional PRD information. Dischargers must electronically file the PRDs, and mail the appropriate annual fee to the State Water Board.

4. This permit is effective on July 1, 2010.

   a. **Dischargers Obtaining Coverage On or After July 1, 2010:** All dischargers requiring coverage on or after July 1, 2010, shall electronically file their PRDs prior to the commencement of construction activities, and mail the appropriate annual fee no later than seven days prior to the commencement of construction activities. Permit coverage shall not commence until the PRDs and the annual fee are received by the State Water Board, and a WDID number is assigned and sent by SMARTS.

   b. **Dischargers Covered Under 99-08-DWQ and 2003-0007-DWQ:** Existing dischargers subject to State Water Board Order No. 99-08-DWQ (existing dischargers) will continue coverage under 99-08-DWQ until July 1, 2010. After July 1, 2010, all NOIs subject to State Water Board Order No. 99-08-DWQ will be terminated.

Existing dischargers shall electronically file their PRDs no later than July 1, 2010. If an existing discharger's site acreage subject to the annual fee has changed, it shall mail a revised annual fee no less than seven days after receiving the revised annual fee notification, **or else lose permit coverage**. All existing dischargers shall be exempt from the risk determination requirements in Section VIII of this General Permit until two years after permit adoption. All existing dischargers are therefore subject to Risk Level 1 requirements regardless of their site's sediment and receiving water risks. However, a Regional Board retains the authority to require an existing discharger to comply with the Section VIII risk determination requirements.

5. The discharger is only considered covered by this General Permit upon receipt of a Waste Discharger Identification (WDID) number assigned and sent by the State Water Board Storm water Multi-Application and Report Tracking System (SMARTS). In order to demonstrate compliance with this General Permit, the discharger must obtain a WDID number and must present documentation of a valid WDID upon demand.

6. During the period this permit is subject to review by the U.S. EPA, the prior permit (State Water Board Order No. 99-08-DWQ) remains in effect. Existing dischargers under the prior permit will continue to have coverage under State Water Board Order No. 99-08-DWQ until this General Permit takes effect on July 1, 2010. Dischargers who complete their projects and electronically file an NOT prior to July 1, 2010, are not required to obtain coverage under this General Permit.

7. Small Construction Rainfall Erosivity Waiver

   EPA's Small Construction Erosivity Waiver applies to sites between one and five acres demonstrating that there are no adverse water quality impacts.

   Dischargers eligible for a Rainfall Erosivity Waiver based on low erosivity potential shall complete the electronic Notice of Intent (NOI) and Sediment Risk form through the State Water Board's SMARTS system, certifying that the construction activity will take place during a period when the value of the rainfall erosivity factor is less than five. Where the LRP changes or another LRP is added during construction, the new LRP must also submit a waiver certification through the SMARTS system.

   If a small construction site continues beyond the projected completion date given on the waiver certification, the LRP shall recalculate the

rainfall erosivity factor for the new project duration and submit this information through the SMARTS system. If the new R factor is below five (5), the discharger shall update through SMARTS all applicable information on the waiver certification and retain a copy of the revised waiver onsite. The LRP shall submit the new waiver certification 30 days prior to the projected completion date listed on the original waiver form to assure exemption from permitting requirements is uninterrupted. If the new R factor is five (5) or above, the LRP shall be required to apply for coverage under this Order.

8. In the case of a public emergency that requires immediate construction activities, a discharger shall submit a brief description of the emergency construction activity within five days of the onset of construction, and then shall submit all PRDs within thirty days.

C. Revising Permit Coverage for Change of Acreage or New Ownership

1. The discharger may reduce or increase the total acreage covered under this General Permit when a portion of the site is complete and/or conditions for termination of coverage have been met (See Section II.D Conditions for Termination of Coverage); when ownership of a portion of the site is sold to a different entity; or when new acreage, subject to this General Permit, is added to the site.

2. Within 30 days of a reduction or increase in total disturbed acreage, the discharger shall electronically file revisions to the PRDs that include:

   a. A revised NOI indicating the new project size;

   b. A revised site map showing the acreage of the site completed, acreage currently under construction, acreage sold/transferred or added, and acreage currently stabilized in accordance with the Conditions for Termination of Coverage in Section II.D below.

   c. SWPPP revisions, as appropriate; and

   d. Certification that any new landowners have been notified of applicable requirements to obtain General Permit coverage. The certification shall include the name, address, telephone number, and e-mail address of the new landowner.

   e. If the project acreage has increased, dischargers shall mail payment of revised annual fees within 14 days of receiving the revised annual fee notification.

3. The discharger shall continue coverage under the General Permit for any parcel that has not achieved "Final Stabilization" as defined in Section II.D.

4. When an LRP with active General Permit coverage transfers its LRP status to another person or entity that qualifies as an LRP, the existing LRP shall inform the new LRP of the General Permit's requirements. In order for the new LRP to continue the construction activity on its parcel of property, the new LRP, or the new LRP's approved signatory, must submit PRDs in accordance with this General Permit's requirements.

D. Conditions for Termination of Coverage

1. Within 90 days of when construction is complete or ownership has been transferred, the discharger shall electronically file a Notice of Termination (NOT), a final site map, and photos through the State Water Boards SMARTS system. Filing a NOT certifies that all General Permit requirements have been met. The Regional Water Board will consider a construction site complete only when all portions of the site have been transferred to a new owner, or all of the following conditions have been met:

    a. For purposes of "final stabilization," the site will not pose any additional sediment discharge risk than it did prior to the commencement of construction activity;

    b. There is no potential for construction-related storm water pollutants to be discharged into site runoff;

    c. Final stabilization has been reached;

    d. Construction materials and wastes have been disposed of properly;

    e. Compliance with the Post-Construction Standards in Section XIII of this General Permit has been demonstrated;

    f. Post-construction storm water management measures have been installed and a long-term maintenance plan[7] has been established; and

    g. All construction-related equipment, materials and any temporary BMPs no longer needed are removed from the site.

[7] For the purposes of this requirement a long-term maintenance plan will be designed for a minimum of five years, and will describe the procedures to ensure that the post-construction storm water management measures are adequately maintained.

2. The discharger shall certify that final stabilization conditions are satisfied in their NOT. Failure to certify shall result in continuation of permit coverage and annual billing.

3. The NOT must demonstrate through photos, RUSLE or RUSLE2, or results of testing and analysis that the site meets all of the conditions above (Section II.D.1) and the final stabilization condition (Section II.D.1.a) is attained by one of the following methods:

   a. "70% final cover method," no computational proof required

      OR:

   b. "RUSLE or RUSLE2 method," computational proof required

      OR:

   c. "Custom method", the discharger shall demonstrate in some other manner than a or b, above, that the site complies with the "final stabilization" requirement in Section II.D.1.a.

III. DISCHARGE PROHIBITIONS

A. Dischargers shall not violate any discharge prohibitions contained in applicable Basin Plans or statewide water quality control plans. Waste discharges to Areas of Special Biological Significance (ASBS) are prohibited by the California Ocean Plan, unless granted an exception issued by the State Water Board.

B. All discharges are prohibited except for the storm water and non-storm water discharges specifically authorized by this General Permit or another NPDES permit.

C. Authorized non-storm water discharges may include those from de-chlorinated potable water sources such as: fire hydrant flushing, irrigation of vegetative erosion control measures, pipe flushing and testing, water to control dust, uncontaminated ground water from dewatering, and other discharges not subject to a separate general NPDES permit adopted by a Regional Water Board. The discharge of non-storm water is authorized under the following conditions:

1. The discharge does not cause or contribute to a violation of any water quality standard;

2. The discharge does not violate any other provision of this General Permit;

3. The discharge is not prohibited by the applicable Basin Plan;

4. The discharger has included and implemented specific BMPs required by this General Permit to prevent or reduce the contact of the non-storm water discharge with construction materials or equipment.

5. The discharge does not contain toxic constituents in toxic amounts or (other) significant quantities of pollutants;

6. The discharge is monitored and meets the applicable NALs and NELs; and

7. The discharger reports the sampling information in the Annual Report.

If any of the above conditions are not satisfied, the discharge is not authorized by this General Permit. The discharger shall notify the Regional Water Board of any anticipated non-storm water discharges not already authorized by this General Permit or another NPDES permit, to determine whether a separate NPDES permit is necessary.

D. Debris resulting from construction activities are prohibited from being discharged from construction sites.

E. When soil contamination is found or suspected and a responsible party is not identified, or the responsible party fails to promptly take the appropriate action, the discharger shall have those soils sampled and tested to ensure proper handling and public safety measures are implemented. The discharger shall notify the appropriate local, State, and federal agency(ies) when contaminated soil is found at a construction site, and will notify the appropriate Regional Water Board.

IV. SPECIAL PROVISIONS

A. Duty to Comply

1. The discharger shall comply with all of the conditions of this General Permit. Any permit noncompliance constitutes a violation of the Clean Water Act (CWA) and the Porter-Cologne Water Quality Control Act and is grounds for enforcement action and/or removal from General Permit coverage.

2. The discharger shall comply with effluent standards or prohibitions established under Section 307(a) of the CWA for toxic pollutants within the time provided in the regulations that establish these standards or prohibitions, even if this General Permit has not yet been modified to incorporate the requirement.

B. General Permit Actions

1. This General Permit may be modified, revoked and reissued, or terminated for cause. The filing of a request by the discharger for a General Permit modification, revocation and reissuance, or termination, or a notification of planned changes or anticipated noncompliance does not annul any General Permit condition.

2. If any toxic effluent standard or prohibition (including any schedule of compliance specified in such effluent standard or prohibition) is promulgated under Section 307(a) of the CWA for a toxic pollutant which is present in the discharge and that standard or prohibition is more stringent than any limitation on the pollutant in this General Permit, this General Permit shall be modified or revoked and reissued to conform to the toxic effluent standard or prohibition and the dischargers so notified.

C. Need to Halt or Reduce Activity Not a Defense

It shall not be a defense for a discharger in an enforcement action that it would have been necessary to halt or reduce the permitted activity in order to maintain compliance with the conditions of this General Permit.

D. Duty to Mitigate

The discharger shall take all responsible steps to minimize or prevent any discharge in violation of this General Permit, which has a reasonable likelihood of adversely affecting human health or the environment.

E. Proper Operation and Maintenance

The discharger shall at all times properly operate and maintain any facilities and systems of treatment and control (and related appurtenances) which are installed or used by the discharger to achieve compliance with the conditions of this General Permit. Proper operation and maintenance also includes adequate laboratory controls and appropriate quality assurance procedures. Proper operation and maintenance may require the operation of backup or auxiliary facilities or similar systems installed by a discharger when necessary to achieve compliance with the conditions of this General Permit.

F. Property Rights

This General Permit does not convey any property rights of any sort or any exclusive privileges, nor does it authorize any injury to private property or any invasion of personal rights, nor does it authorize any infringement of Federal, State, or local laws or regulations.

G. Duty to Maintain Records and Provide Information

1. The discharger shall maintain a paper or electronic copy of all required records, including a copy of this General Permit, for three years from the date generated or date submitted, whichever is last. These records shall be available at the construction site until construction is completed.

2. The discharger shall furnish the Regional Water Board, State Water Board, or U.S. EPA, within a reasonable time, any requested information to determine compliance with this General Permit. The discharger shall also furnish, upon request, copies of records that are required to be kept by this General Permit.

H. Inspection and Entry

The discharger shall allow the Regional Water Board, State Water Board, U.S. EPA, and/or, in the case of construction sites which discharge through a municipal separate storm sewer, an authorized representative of the municipal operator of the separate storm sewer system receiving the discharge, upon the presentation of credentials and other documents as may be required by law, to:

1. Enter upon the discharger's premises at reasonable times where a regulated construction activity is being conducted or where records must be kept under the conditions of this General Permit;

2. Access and copy at reasonable times any records that must be kept under the conditions of this General Permit;

3. Inspect at reasonable times the complete construction site, including any off-site staging areas or material storage areas, and the erosion/sediment controls; and

4. Sample or monitor at reasonable times for the purpose of ensuring General Permit compliance.

I. Electronic Signature and Certification Requirements

1. All Permit Registration Documents (PRDs) and Notices of Termination (NOTs) shall be electronically signed, certified, and submitted via SMARTS to the State Water Board. Either the Legally Responsible Person (LRP), as defined in Appendix 5 – Glossary, or a person legally authorized to sign and certify PRDs and NOTs on behalf of the LRP (the LRP's Approved Signatory, as defined in Appendix 5 - Glossary) must submit all information electronically via SMARTS.

2. Changes to Authorization. If an Approved Signatory's authorization is no longer accurate, a new authorization satisfying the requirements of paragraph (a) of this section must be submitted via SMARTS prior to or together with any reports, information or applications to be signed by an Approved Signatory.

3. All Annual Reports, or other information required by the General Permit (other than PRDs and NOTs) or requested by the Regional Water Board, State Water Board, U.S. EPA, or local storm water management agency shall be certified and submitted by the LRP or the LRP's Approved Signatory.

J. Certification

Any person signing documents under Section IV.I above, shall make the following certification:

"I certify under penalty of law that this document and all attachments were prepared under my direction or supervision in accordance with a system designed to assure that qualified personnel properly gather and evaluate the information submitted. Based on my inquiry of the person or persons who manage the system or those persons directly responsible for gathering the information, to the best of my knowledge and belief, the information submitted is, true, accurate, and complete. I am aware that there are significant penalties for submitting false information, including the possibility of fine and imprisonment for knowing violations."

K. Anticipated Noncompliance

The discharger shall give advance notice to the Regional Water Board and local storm water management agency of any planned changes in the construction activity, which may result in noncompliance with General Permit requirements.

L. Bypass

Bypass[8] is prohibited. The Regional Water Board may take enforcement action against the discharger for bypass unless:

1. Bypass was unavoidable to prevent loss of life, personal injury or severe property damage;[9]

2. There were no feasible alternatives to bypass, such as the use of auxiliary treatment facilities, retention of untreated waste, or maintenance during normal periods of equipment downtime. This condition is not satisfied if adequate back-up equipment should have been installed in the exercise of reasonable engineering judgment to prevent a bypass that could occur during normal periods of equipment downtime or preventative maintenance;

3. The discharger submitted a notice at least ten days in advance of the need for a bypass to the Regional Water Board; or

4. The discharger may allow a bypass to occur that does not cause effluent limitations to be exceeded, but only if it is for essential maintenance to assure efficient operation. In such a case, the above bypass conditions are not applicable. The discharger shall submit notice of an unanticipated bypass as required.

M. Upset

1. A discharger that wishes to establish the affirmative defense of an upset[10] in an action brought for noncompliance shall demonstrate,

---

[8] The intentional diversion of waste streams from any portion of a treatment facility

[9] Severe property damage means substantial physical damage to property, damage to the treatment facilities that causes them to become inoperable, or substantial and permanent loss of natural resources that can reasonably be expected to occur in the absence of a bypass. Severe property damage does not mean economic loss caused by delays in production.

[10] An exceptional incident in which there is unintentional and temporary noncompliance the technology based numeric effluent limitations because of factors beyond the reasonable control of the discharger. An upset does not include noncompliance to the extent caused by operational error, improperly designed treatment facilities, inadequate treatment facilities, lack of preventative maintenance, or careless or improper operation.

through properly signed, contemporaneous operating logs, or other relevant evidence that:

a. An upset occurred and that the discharger can identify the cause(s) of the upset

b. The treatment facility was being properly operated by the time of the upset

c. The discharger submitted notice of the upset as required; and

d. The discharger complied with any remedial measures required

2. No determination made before an action of noncompliance occurs, such as during administrative review of claims that noncompliance was caused by an upset, is final administrative action subject to judicial review.

3. In any enforcement proceeding, the discharger seeking to establish the occurrence of an upset has the burden of proof

N. Penalties for Falsification of Reports

Section 309(c)(4) of the CWA provides that any person who knowingly makes any false material statement, representation, or certification in any record or other document submitted or required to be maintained under this General Permit, including reports of compliance or noncompliance shall upon conviction, be punished by a fine of not more than $10,000 or by imprisonment for not more than two years or by both.

O. Oil and Hazardous Substance Liability

Nothing in this General Permit shall be construed to preclude the institution of any legal action or relieve the discharger from any responsibilities, liabilities, or penalties to which the discharger is or may be subject to under Section 311 of the CWA.

P. Severability

The provisions of this General Permit are severable; and, if any provision of this General Permit or the application of any provision of this General Permit to any circumstance is held invalid, the application of such provision to other circumstances and the remainder of this General Permit shall not be affected thereby.

Q. Reopener Clause

This General Permit may be modified, revoked and reissued, or terminated for cause due to promulgation of amended regulations, receipt of U.S. EPA guidance concerning regulated activities, judicial decision, or in accordance with 40 Code of Federal Regulations (CFR) 122.62, 122.63, 122.64, and 124.5.

R. Penalties for Violations of Permit Conditions

1. Section 309 of the CWA provides significant penalties for any person who violates a permit condition implementing Sections 301, 302, 306, 307, 308, 318, or 405 of the CWA or any permit condition or limitation implementing any such section in a permit issued under Section 402. Any person who violates any permit condition of this General Permit is subject to a civil penalty not to exceed $37,500[11] per calendar day of such violation, as well as any other appropriate sanction provided by Section 309 of the CWA.

2. The Porter-Cologne Water Quality Control Act also provides for civil and criminal penalties, which in some cases are greater than those under the CWA.

S. Transfers

This General Permit is not transferable.

T. Continuation of Expired Permit

This General Permit continues in force and effect until a new General Permit is issued or the SWRCB rescinds this General Permit. Only those dischargers authorized to discharge under the expiring General Permit are covered by the continued General Permit.

[11] May be further adjusted in accordance with the Federal Civil Penalties Inflation Adjustment Act.

V. EFFLUENT STANDARDS

A. Narrative Effluent Limitations

1. Storm water discharges and authorized non-storm water discharges regulated by this General Permit shall not contain a hazardous substance equal to or in excess of reportable quantities established in 40 C.F.R. §§ 117.3 and 302.4, unless a separate NPDES Permit has been issued to regulate those discharges.

2. Dischargers shall minimize or prevent pollutants in storm water discharges and authorized non-storm water discharges through the use of controls, structures, and management practices that achieve BAT for toxic and non-conventional pollutants and BCT for conventional pollutants.

B. Numeric Effluent Limitations (NELs)

Table 1- Numeric Effluent Limitations, Numeric Action Levels, Test Methods, Detection Limits, and Reporting Units

Parameter	Test Method	Discharge Type	Min. Detection Limit	Units	Numeric Action Level	Numeric Effluent Limitation
pH	Field test with calibrated portable instrument	Risk Level 2	0.2	pH units	lower NAL = 6.5 upper NAL = 8.5	N/A
		Risk Level 3			lower NAL = 6.5 upper NAL = 8.5	lower NEL = 6.0 upper NEL = 9.0
Turbidity	EPA 0180.1 and/or field test with calibrated portable instrument	Risk Level 2	1	NTU	250 NTU	N/A
		Risk Level 3			250 NTU	500 NTU

1. Numeric Effluent Limitations (NELs):

   a. **Storm Event, Daily Average pH Limits –** For Risk Level 3 dischargers, the pH of storm water and non-storm water discharges

shall be within the ranges specified in Table 1 during any site phase where there is a "high risk of pH discharge."[12]

b. **Storm Event Daily Average Turbidity Limit –** For Risk Level 3 dischargers, the turbidity of storm water and non-storm water discharges shall not exceed 500 NTU.

2. If daily average sampling results are outside the range of pH NELs (i.e., is below the lower NEL for pH or exceeds the upper NEL for pH) or exceeds the turbidity NEL (as listed in Table 1), the discharger is in violation of this General Permit and shall electronically file monitoring results in violation within 5 business days of obtaining the results.

3. **Compliance Storm Event**:

   Discharges of storm water from Risk Level 3 sites shall comply with applicable NELs (above) unless the storm event causing the discharges is determined after the fact to be equal to or larger than the Compliance Storm Event (expressed in inches of rainfall). The Compliance Storm Event for Risk Level 3 discharges is the 5 year, 24 hour storm (expressed in tenths of an inch of rainfall), as determined by using these maps:

   http://www.wrcc.dri.edu/pcpnfreq/nca5y24.gif
   http://www.wrcc.dri.edu/pcpnfreq/sca5y24.gif

   Compliance storm event verification shall be done by reporting on-site rain gauge readings as well as nearby governmental rain gauge readings.

4. Dischargers shall not be required to comply with NELs if the site receives run-on from a forest fire or any other natural disaster.

C. Numeric Action Levels (NALs)

1. For Risk Level 2 and 3 dischargers, the lower storm event average NAL for pH is 6.5 pH units and the upper storm event average NAL for pH is 8.5 pH units. The discharger shall take actions as described below if the discharge is outside of this range of pH values.

[12] A period of high risk of pH discharge is defined as a project's complete utilities phase, complete vertical build phase, and any portion of any phase where significant amounts of materials are placed directly on the land at the site in a manner that could result in significant alterations of the background pH of the discharges.

2. For Risk Level 2 and 3 dischargers, the NAL storm event daily average for turbidity is 250 NTU. The discharger shall take actions as described below if the discharge is outside of this range of turbidity values.

3. Whenever the results from a storm event daily average indicate that the discharge is below the lower NAL for pH, exceeds the upper NAL for pH, or exceeds the turbidity NAL (as listed in Table 1), the discharger shall conduct a construction site and run-on evaluation to determine whether pollutant source(s) associated with the site's construction activity may have caused or contributed to the NAL exceedance and shall immediately implement corrective actions if they are needed.

4. The site evaluation shall be documented in the SWPPP and specifically address whether the source(s) of the pollutants causing the exceedance of the NAL:

    a. Are related to the construction activities and whether additional BMPs are required to (1) meet BAT/BCT requirements; (2) reduce or prevent pollutants in storm water discharges from causing exceedances of receiving water objectives; and (3) determine what corrective action(s) were taken or will be taken and with a description of the schedule for completion.

    AND/OR:

    b. Are related to the run-on associated with the construction site location and whether additional BMPs measures are required to (1) meet BAT/BCT requirements; (2) reduce or prevent pollutants in storm water discharges from causing exceedances of receiving water objectives; and (3) what corrective action(s) were taken or will be taken with a description of the schedule for completion.

VI. RECEIVING WATER LIMITATIONS

A. The discharger shall ensure that storm water discharges and authorized non-storm water discharges to any surface or ground water will not adversely affect human health or the environment.

B. The discharger shall ensure that storm water discharges and authorized non-storm water discharges will not contain pollutants in quantities that threaten to cause pollution or a public nuisance.

C. The discharger shall ensure that storm water discharges and authorized non-storm water discharges will not contain pollutants that cause or contribute to an exceedance of any applicable water quality objectives or water quality standards (collectively, WQS) contained in a Statewide Water Quality Control Plan, the California Toxics Rule, the National Toxics Rule, or the applicable Regional Water Board's Water Quality Control Plan (Basin Plan).

D. Dischargers located within the watershed of a CWA § 303(d) impaired water body, for which a TMDL has been approved by the U.S. EPA, shall comply with the approved TMDL if it identifies "construction activity" or land disturbance as a source of the pollution.

VII. TRAINING QUALIFICATIONS AND CERTIFICATION REQUIREMENTS

A. General

The discharger shall ensure that all persons responsible for implementing requirements of this General Permit shall be appropriately trained in accordance with this Section. Training should be both formal and informal, occur on an ongoing basis, and should include training offered by recognized governmental agencies or professional organizations. Those responsible for preparing and amending SWPPPs shall comply with the requirements in this Section VII.

The discharger shall provide documentation of all training for persons responsible for implementing the requirements of this General Permit in the Annual Reports.

B. SWPPP Certification Requirements

1. **Qualified SWPPP Developer:** The discharger shall ensure that SWPPPs are written, amended and certified by a Qualified SWPPP Developer (QSD). A QSD shall have one of the following registrations or certifications, and appropriate experience, as required for:

   a. A California registered professional civil engineer;

   b. A California registered professional geologist or engineering geologist;

   c. A California registered landscape architect;

   d. A professional hydrologist registered through the American Institute of Hydrology;

   e. A Certified Professional in Erosion and Sediment Control (CPESC) ™ registered through Enviro Cert International, Inc.;

   f. A Certified Professional in Storm Water Quality (CPSWQ) ™ registered through Enviro Cert International, Inc.; or

   g. A professional in erosion and sediment control registered through the National Institute for Certification in Engineering Technologies (NICET).

Effective two years after the adoption date of this General Permit, a QSD shall have attended a State Water Board-sponsored or approved QSD training course.

2. The discharger shall list the name and telephone number of the currently designated Qualified SWPPP Developer(s) in the SWPPP.

3. **Qualified SWPPP Practitioner:** The discharger shall ensure that all BMPs required by this General Permit are implemented by a Qualified SWPPP Practitioner (QSP). A QSP is a person responsible for non-storm water and storm water visual observations, sampling and analysis. Effective two years from the date of adoption of this General Permit, a QSP shall be either a QSD or have one of the following certifications:

   a. A certified erosion, sediment and storm water inspector registered through Enviro Cert International, Inc.; or

   b. A certified inspector of sediment and erosion control registered through Certified Inspector of Sediment and Erosion Control, Inc.

   Effective two years after the adoption date of this General Permit, a QSP shall have attended a State Water Board-sponsored or approved QSP training course.

4. The LRP shall list in the SWPPP, the name of any Approved Signatory, and provide a copy of the written agreement or other mechanism that provides this authority from the LRP in the SWPPP.

5. The discharger shall include, in the SWPPP, a list of names of all contractors, subcontractors, and individuals who will be directed by the Qualified SWPPP Practitioner. This list shall include telephone numbers and work addresses. Specific areas of responsibility of each subcontractor and emergency contact numbers shall also be included.

6. The discharger shall ensure that the SWPPP and each amendment will be signed by the Qualified SWPPP Developer. The discharger shall include a listing of the date of initial preparation and the date of each amendment in the SWPPP.

VIII. RISK DETERMINATION

The discharger shall calculate the site's sediment risk and receiving water risk during periods of soil exposure (i.e. grading and site stabilization) and use the calculated risks to determine a Risk Level(s) using the methodology in

Appendix 1. For any site that spans two or more planning watersheds,[13] the discharger shall calculate a separate Risk Level for each planning watershed. The discharger shall notify the State Water Board of the site's Risk Level determination(s) and shall include this determination as a part of submitting the PRDs. If a discharger ends up with more than one Risk Level determination, the Regional Water Board may choose to break the project into separate levels of implementation.

IX. RISK LEVEL 1 REQUIREMENTS

Risk Level 1 Dischargers shall comply with the requirements included in Attachment C of this General Permit.

X. RISK LEVEL 2 REQUIREMENTS

Risk Level 2 Dischargers shall comply with the requirements included in Attachment D of this General Permit.

XI. RISK LEVEL 3 REQUIREMENTS

Risk Level 3 Dischargers shall comply with the requirements included in Attachment E of this General Permit.

XII. ACTIVE TREATMENT SYSTEMS (ATS)

Dischargers choosing to implement an ATS on their site shall comply with all of the requirements in Attachment F of this General Permit.

[13] Planning watershed: defined by the Calwater Watershed documents as a watershed that ranges in size from approximately 3,000 to 10,000 acres http://cain.ice.ucdavis.edu/calwater/calwfaq.html, http://gis.ca.gov/catalog/BrowseRecord.epl?id=22175 .

XIII. POST-CONSTRUCTION STANDARDS

A. All dischargers shall comply with the following runoff reduction requirements unless they are located within an area subject to post-construction standards of an active Phase I or II municipal separate storm sewer system (MS4) permit that has an approved Storm Water Management Plan.

1. This provision shall take effect three years from the adoption date of this permit, or later at the discretion of the Executive Officer of the Regional Board.

2. The discharger shall demonstrate compliance with the requirements of this section by submitting with their NOI a map and worksheets in accordance with the instructions in Appendix 2. The discharger shall use non-structural controls unless the discharger demonstrates that non-structural controls are infeasible or that structural controls will produce greater reduction in water quality impacts.

3. The discharger shall, through the use of non-structural and structural measures as described in Appendix 2, replicate the pre-project water balance (for this permit, defined as the volume of rainfall that ends up as runoff) for the smallest storms up to the 85th percentile storm event (or the smallest storm event that generates runoff, whichever is larger). Dischargers shall inform Regional Water Board staff at least 30 days prior to the use of any structural control measure used to comply with this requirement. Volume that cannot be addressed using non-structural practices shall be captured in structural practices and approved by the Regional Water Board. When seeking Regional Board approval for the use of structural practices, dischargers shall document the infeasibility of using non-structural practices on the project site, or document that there will be fewer water quality impacts through the use of structural practices.

4. For sites whose disturbed area exceeds two acres, the discharger shall preserve the pre-construction drainage density (miles of stream length per square mile of drainage area) for all drainage areas within the area serving a first order stream[14] or larger stream and ensure that post-project time of runoff concentration is equal or greater than pre-project time of concentration.

[14] A first order stream is defined as a stream with no tributaries.

B. All dischargers shall implement BMPs to reduce pollutants in storm water discharges that are reasonably foreseeable after all construction phases have been completed at the site (Post-construction BMPs).

XIV. SWPPP REQUIREMENTS

A. The discharger shall ensure that the Storm Water Pollution Prevention Plans (SWPPPs) for all traditional project sites are developed and amended or revised by a QSD. The SWPPP shall be designed to address the following objectives:

1. All pollutants and their sources, including sources of sediment associated with construction, construction site erosion and all other activities associated with construction activity are controlled;

2. Where not otherwise required to be under a Regional Water Board permit, all non-storm water discharges are identified and either eliminated, controlled, or treated;

3. Site BMPs are effective and result in the reduction or elimination of pollutants in storm water discharges and authorized non-storm water discharges from construction activity to the BAT/BCT standard;

4. Calculations and design details as well as BMP controls for site run-on are complete and correct, and

5. Stabilization BMPs installed to reduce or eliminate pollutants after construction are completed.

B. To demonstrate compliance with requirements of this General Permit, the QSD shall include information in the SWPPP that supports the conclusions, selections, use, and maintenance of BMPs.

C. The discharger shall make the SWPPP available at the construction site during working hours while construction is occurring and shall be made available upon request by a State or Municipal inspector. When the original SWPPP is retained by a crewmember in a construction vehicle and is not currently at the construction site, current copies of the BMPs and map/drawing will be left with the field crew and the original SWPPP shall be made available via a request by radio/telephone.

XV. REGIONAL WATER BOARD AUTHORITIES

A. In the case where the Regional Water Board does not agree with the discharger's self-reported risk level (e.g., they determine themselves to be a Level 1 Risk when they are actually a Level 2 Risk site), Regional Water Boards may either direct the discharger to reevaluate the Risk Level(s) for their site or terminate coverage under this General Permit.

B. Regional Water Boards may terminate coverage under this General Permit for dischargers who fail to comply with its requirements or where they determine that an individual NPDES permit is appropriate.

C. Regional Water Boards may require dischargers to submit a Report of Waste Discharge / NPDES permit application for Regional Water Board consideration of individual requirements.

D. Regional Water Boards may require additional Monitoring and Reporting Program Requirements, including sampling and analysis of discharges to sediment-impaired water bodies.

E. Regional Water Boards may require dischargers to retain records for more than the three years required by this General Permit.

XVI. ANNUAL REPORTING REQUIREMENTS

A. All dischargers shall prepare and electronically submit an Annual Report no later than September 1 of each year.

B. The discharger shall certify each Annual Report in accordance with the Special Provisions.

C. The discharger shall retain an electronic or paper copy of each Annual Report for a minimum of three years after the date the annual report is filed.

D. The discharger shall include storm water monitoring information in the Annual Report consisting of:

1. a summary and evaluation of all sampling and analysis results, including copies of laboratory reports;

2. the analytical method(s), method reporting unit(s), and method detection limit(s) of each analytical parameter (analytical results that are less than the method detection limit shall be reported as "less than the method detection limit");

3. a summary of all corrective actions taken during the compliance year;

4. identification of any compliance activities or corrective actions that were not implemented;

5. a summary of all violations of the General Permit;

6. the names of individual(s) who performed the facility inspections, sampling, visual observation (inspections), and/or measurements;

7. the date, place, time of facility inspections, sampling, visual observation (inspections), and/or measurements, including precipitation (rain gauge); and

8. the visual observation and sample collection exception records and reports specified in Attachments C, D, and E.

E. The discharger shall provide training information in the Annual Report consisting of:

1. documentation of all training for individuals responsible for all activities associated with compliance with this General Permit;

2. documentation of all training for individuals responsible for BMP installation, inspection, maintenance, and repair; and

3. documentation of all training for individuals responsible for overseeing, revising, and amending the SWPPP.

ATTACHMENT B
PERMIT REGISTRATION DOCUMENTS (PRDs) TO COMPLY WITH THE TERMS OF THE GENERAL PERMIT TO DISCHARGE STORM WATER ASSOCIATED WITH CONSTRUCTION ACTIVITY

GENERAL INSTRUCTIONS

A. All Linear Construction Projects shall comply with the PRD requirements in Attachment A.2 of this Order.

B. Who Must Submit

Discharges of storm water associated with construction that results in the disturbance of one acre or more of land must apply for coverage under the General Construction Storm Water Permit (General Permit). Any construction activity that is a part of a larger common plan of development or sale must also be permitted, regardless of size. (For example, if 0.5 acre of a 20-acre subdivision is disturbed by the construction activities of discharger A and the remaining 19.5 acres is to be developed by discharger B, discharger A must obtain a General Storm Water Permit for the 0.5 acre project).

Other discharges from construction activities that are covered under this General Permit can be found in the General Permit Section II.B.

It is the LRP's responsibility to obtain coverage under this General Permit by electronically submitting complete PRDs (Permit Registration Documents).

In all cases, the proper procedures for submitting the PRDs must be completed before construction can commence.

C. Construction Activity Not Covered By This General Permit

Discharges from construction that are not covered under this General Permit can be found in the General Permit Sections II.A &B..

D. Annual Fees and Fee Calculation

Annual fees are calculated based upon the total area of land to be disturbed not the total size of the acreage owned. However, the calculation includes all acres to be disturbed during the duration of the project. For example, if 10 acres are scheduled to be disturbed the first year and 10 in each subsequent year for 5 years, the annual fees would be based upon 50 acres of disturbance. The State Water Board will evaluate adding acreage to an existing Permit Waste Discharge Identification (WDID) number on a case-by-case basis. In general, any acreage to be considered must be contiguous to the permitted land area and the existing

SWPPP must be appropriate for the construction activity and topography of the acreage under consideration. As acreage is built out and stabilized or sold, the Change of Information (COI) form enables the applicant to remove those acres from inclusion in the annual fee calculation. Checks should be made payable to: State Water Board.

The Annual fees are established through regulations adopted by the State Water Board. The total annual fee is the current base fee plus applicable surcharges for all construction sites submitting an NOI, based on the total acreage to be disturbed during the life of the project. Annual fees are subject to change by regulation.

Dischargers that apply for and satisfy the Small Construction Erosivity Wavier requirements shall pay a fee of $200.00 plus an applicable surcharge, see the General Permit Section II.B.7.

E. When to Apply

LRP's proposing to conduct construction activities subject to this General Permit must submit their PRDs prior to the commencement of construction activity.

F. Requirements for Completing Permit Registration Documents (PRDs)

All dischargers required to comply with this General Permit shall electronically submit the required PRDs for their type of construction as defined below.

G. Standard PRD Requirements (All Dischargers)

1. Notice of Intent
2. Risk Assessment (Standard or Site-Specific)
3. Site Map
4. SWPPP
5. Annual Fee
6. Certification

H. Additional PRD Requirements Related to Construction Type

1. Discharger in unincorporated areas of the State (not covered under an adopted Phase I or II SUSMP requirements) and that are not a linear project shall also submit a completed:
   a. Post-Construction Water Balance Calculator (Appendix 2).

2. Dischargers who are proposing to implement ATS shall submit:
   a. Complete ATS Plan in accordance with Attachment F at least 14 days prior to the planned operation of the ATS and a paper copy shall be available onsite during ATS operation.

b. Certification proof that design done by a professional in accordance with Attachment F.

3. Dischargers who are proposing an alternate Risk Justification:
   a. Particle Size Analysis.

I. Exceptions to Standard PRD Requirements

Construction sites with an R value less than 5 as determined in the Risk Assessment are not required to submit a SWPPP.

J. Description of PRDs

1. Notice of Intent (NOI)

2. Site Map(s) Includes:
   a. The project's surrounding area (vicinity)
   b. Site layout
   c. Construction site boundaries
   d. Drainage areas
   e. Discharge locations
   f. Sampling locations
   g. Areas of soil disturbance (temporary or permanent)
   h. Active areas of soil disturbance (cut or fill)
   i. Locations of all runoff BMPs
   j. Locations of all erosion control BMPs
   k. Locations of all sediment control BMPs
   l. ATS location (if applicable)
   m. Locations of sensitive habitats, watercourses, or other features which are not to be disturbed
   n. Locations of all post-construction BMPs
   o. Locations of storage areas for waste, vehicles, service, loading/unloading of materials, access (entrance/exits) points to construction site, fueling, and water storage, water transfer for dust control and compaction practices

3. **SWPPPs**
   A site-specific SWPPP shall be developed by each discharger and shall be submitted with the PRDs.

4. **Risk Assessment**
   All dischargers shall use the Risk Assessment procedure as describe in the General Permit Appendix 1.

   a. The Standard Risk Assessment includes utilization of the following:
      i. Receiving water Risk Assessment interactive map

ii. EPA Rainfall Erosivity Factor Calculator Website
iii. Sediment Risk interactive map
iv. Sediment sensitive water bodies list

b. The Site-Specific Risk Assessment includes the completion of the hand calculated R value Risk Calculator

5. **Post-Construction Water Balance Calculator**
All dischargers subject to this requirement shall complete the Water Balance Calculator (in Appendix 2) in accordance with the instructions.

6. **ATS Design Document and Certification**
All dischargers using ATS must submit electronically their system design (as well as any supporting documentation) and proof that the system was designed by a qualified ATS design professional (See Attachment F).

To obtain coverage under the General Permit PRDs must be included and completed. If any of the required items are missing, the PRD submittal is considered incomplete and will be rejected. Upon receipt of a complete PRD submittal, the State Water Board will process the application package in the order received and assign a (WDID) number.

Questions?

If you have any questions on completing the PRDs please email stormwater@waterboards.ca.gov or call (866) 563-3107.

ATTACHMENT C
RISK LEVEL 1 REQUIREMENTS

A. Effluent Standards

[These requirements are the same as those in the General Permit order.]

1. Narrative – Risk Level 1 dischargers shall comply with the narrative effluent standards listed below:

    a. Storm water discharges and authorized non-storm water discharges regulated by this General Permit shall not contain a hazardous substance equal to or in excess of reportable quantities established in 40 C.F.R. §§ 117.3 and 302.4, unless a separate NPDES Permit has been issued to regulate those discharges.

    b. Dischargers shall minimize or prevent pollutants in storm water discharges and authorized non-storm water discharges through the use of controls, structures, and management practices that achieve BAT for toxic and non-conventional pollutants and BCT for conventional pollutants.

2. Numeric – Risk Level 1 dischargers are not subject to a numeric effluent standard.

B. Good Site Management "Housekeeping"

1. Risk Level 1 dischargers shall implement good site management (i.e., "housekeeping") measures for construction materials that could potentially be a threat to water quality if discharged. At a minimum, Risk Level 1 dischargers shall implement the following good housekeeping measures:

    a. Conduct an inventory of the products used and/or expected to be used and the end products that are produced and/or expected to be produced. This does not include materials and equipment that are designed to be outdoors and exposed to environmental conditions (i.e. poles, equipment pads, cabinets, conductors, insulators, bricks, etc.).

    b. Cover and berm loose stockpiled construction materials that are not actively being used (i.e. soil, spoils, aggregate, fly-ash, stucco, hydrated lime, etc.).

c. Store chemicals in watertight containers (with appropriate secondary containment to prevent any spillage or leakage) or in a storage shed (completely enclosed).

d. Minimize exposure of construction materials to precipitation. This does not include materials and equipment that are designed to be outdoors and exposed to environmental conditions (i.e. poles, equipment pads, cabinets, conductors, insulators, bricks, etc.).

e. Implement BMPs to prevent the off-site tracking of loose construction and landscape materials.

2. Risk Level 1 dischargers shall implement good housekeeping measures for waste management, which, at a minimum, shall consist of the following:

a. Prevent disposal of any rinse or wash waters or materials on impervious or pervious site surfaces or into the storm drain system.

b. Ensure the containment of sanitation facilities (e.g., portable toilets) to prevent discharges of pollutants to the storm water drainage system or receiving water.

c. Clean or replace sanitation facilities and inspecting them regularly for leaks and spills.

d. Cover waste disposal containers at the end of every business day and during a rain event.

e. Prevent discharges from waste disposal containers to the storm water drainage system or receiving water.

f. Contain and securely protect stockpiled waste material from wind and rain at all times unless actively being used.

g. Implement procedures that effectively address hazardous and non-hazardous spills.

h. Develop a spill response and implementation element of the SWPPP prior to commencement of construction activities. The SWPPP shall require that:

i. Equipment and materials for cleanup of spills shall be available on site and that spills and leaks shall be cleaned up immediately and disposed of properly; and

ii. Appropriate spill response personnel are assigned and trained.

i. Ensure the containment of concrete washout areas and other washout areas that may contain additional pollutants so there is no discharge into the underlying soil and onto the surrounding areas.

3. Risk Level 1 dischargers shall implement good housekeeping for vehicle storage and maintenance, which, at a minimum, shall consist of the following:

   a. Prevent oil, grease, or fuel to leak in to the ground, storm drains or surface waters.

   b. Place all equipment or vehicles, which are to be fueled, maintained and stored in a designated area fitted with appropriate BMPs.

   c. Clean leaks immediately and disposing of leaked materials properly.

4. Risk Level 1 dischargers shall implement good housekeeping for landscape materials, which, at a minimum, shall consist of the following:

   a. Contain stockpiled materials such as mulches and topsoil when they are not actively being used.

   b. Contain fertilizers and other landscape materials when they are not actively being used.

   c. Discontinue the application of any erodible landscape material within 2 days before a forecasted rain event or during periods of precipitation.

   d. Apply erodible landscape material at quantities and application rates according to manufacture recommendations or based on written specifications by knowledgeable and experienced field personnel.

   e. Stack erodible landscape material on pallets and covering or storing such materials when not being used or applied.

5. Risk Level 1 dischargers shall conduct an assessment and create a list of potential pollutant sources and identify any areas of the site where additional BMPs are necessary to reduce or prevent pollutants in storm water discharges and authorized non-storm water discharges. This potential pollutant list shall be kept with the SWPPP and shall identify

all non-visible pollutants which are known, or should be known, to occur on the construction site. At a minimum, when developing BMPs, Risk Level 1 dischargers shall do the following:

a. Consider the quantity, physical characteristics (e.g., liquid, powder, solid), and locations of each potential pollutant source handled, produced, stored, recycled, or disposed of at the site.

b. Consider the degree to which pollutants associated with those materials may be exposed to and mobilized by contact with storm water.

c. Consider the direct and indirect pathways that pollutants may be exposed to storm water or authorized non-storm water discharges. This shall include an assessment of past spills or leaks, non-storm water discharges, and discharges from adjoining areas.

d. Ensure retention of sampling, visual observation, and inspection records.

e. Ensure effectiveness of existing BMPs to reduce or prevent pollutants in storm water discharges and authorized non-storm water discharges.

6. Risk Level 1 dischargers shall implement good housekeeping measures on the construction site to control the air deposition of site materials and from site operations. Such particulates can include, but are not limited to, sediment, nutrients, trash, metals, bacteria, oil and grease and organics.

C. Non-Storm Water Management

1. Risk Level 1 dischargers shall implement measures to control all non-storm water discharges during construction.

2. Risk Level 1 dischargers shall wash vehicles in such a manner as to prevent non-storm water discharges to surface waters or MS4 drainage systems.

3. Risk Level 1 dischargers shall clean streets in such a manner as to prevent unauthorized non-storm water discharges from reaching surface water or MS4 drainage systems.

D. Erosion Control

1. Risk Level 1 dischargers shall implement effective wind erosion control.

2. Risk Level 1 dischargers shall provide effective soil cover for inactive[1] areas and all finished slopes, open space, utility backfill, and completed lots.

3. Risk Level 1 dischargers shall limit the use of plastic materials when more sustainable, environmentally friendly alternatives exist. Where plastic materials are deemed necessary, the discharger shall consider the use of plastic materials resistant to solar degradation.

E. Sediment Controls

1. Risk Level 1 dischargers shall establish and maintain effective perimeter controls and stabilize all construction entrances and exits to sufficiently control erosion and sediment discharges from the site.

2. On sites where sediment basins are to be used, Risk Level 1 dischargers shall, at minimum, design sediment basins according to the method provided in CASQA's Construction BMP Guidance Handbook.

F. Run-on and Runoff Controls

Risk Level 1 dischargers shall effectively manage all run-on, all runoff within the site and all runoff that discharges off the site. Run-on from off site shall be directed away from all disturbed areas or shall collectively be in compliance with the effluent limitations in this General Permit.

G. Inspection, Maintenance and Repair

1. Risk Level 1 dischargers shall ensure that all inspection, maintenance repair and sampling activities at the project location shall be performed or supervised by a Qualified SWPPP Practitioner (QSP) representing the discharger. The QSP may delegate any or all of these activities to an employee trained to do the task(s) appropriately, but shall ensure adequate deployment.

2. Risk Level 1 dischargers shall perform weekly inspections and observations, and at least once each 24-hour period during extended

[1] Inactive areas of construction are areas of construction activity that have been disturbed and are not scheduled to be re-disturbed for at least 14 days.

storm events, to identify and record BMPs that need maintenance to operate effectively, that have failed, or that could fail to operate as intended. Inspectors shall be the QSP or be trained by the QSP.

3. Upon identifying failures or other shortcomings, as directed by the QSP, Risk Level 1 dischargers shall begin implementing repairs or design changes to BMPs within 72 hours of identification and complete the changes as soon as possible.

4. For each inspection required, Risk Level 1 dischargers shall complete an inspection checklist, using a form provided by the State Water Board or Regional Water Board or in an alternative format.

5. Risk Level 1 dischargers shall ensure that checklists shall remain onsite with the SWPPP and at a minimum, shall include:

    a. Inspection date and date the inspection report was written.

    b. Weather information, including presence or absence of precipitation, estimate of beginning of qualifying storm event, duration of event, time elapsed since last storm, and approximate amount of rainfall in inches.

    c. Site information, including stage of construction, activities completed, and approximate area of the site exposed.

    d. A description of any BMPs evaluated and any deficiencies noted.

    e. If the construction site is safely accessible during inclement weather, list the observations of all BMPs: erosion controls, sediment controls, chemical and waste controls, and non-storm water controls. Otherwise, list the results of visual inspections at all relevant outfalls, discharge points, downstream locations and any projected maintenance activities.

    f. Report the presence of noticeable odors or of any visible sheen on the surface of any discharges.

    g. Any corrective actions required, including any necessary changes to the SWPPP and the associated implementation dates.

    h. Photographs taken during the inspection, if any.

    i. Inspector’s name, title, and signature.

H. Rain Event Action Plan

Not required for Risk Level 1 dischargers.

I. Risk Level 1 Monitoring and Reporting Requirements

Table 1- Summary of Monitoring Requirements

Risk Level	Visual Inspections					Sample Collection	
	Quarterly Non-storm Water Discharge	Pre-storm Event		Daily Storm BMP	Post Storm	Storm Water Discharge	Receiving Water
		Baseline	REAP				
1	X	X		X	X		

1. **Construction Site Monitoring Program Requirements**

   a. Pursuant to Water Code Sections 13383 and 13267, all dischargers subject to this General Permit shall develop and implement a written site-specific Construction Site Monitoring Program (CSMP) in accordance with the requirements of this Section. The CSMP shall include all monitoring procedures and instructions, location maps, forms, and checklists as required in this section. The CSMP shall be developed prior to the commencement of construction activities, and revised as necessary to reflect project revisions. The CSMP shall be a part of the Storm Water Pollution Prevention Plan (SWPPP), included as an appendix or separate SWPPP chapter.

   b. Existing dischargers registered under the State Water Board Order No. 99-08-DWQ shall make and implement necessary revisions to their Monitoring Programs to reflect the changes in this General Permit in a timely manner, but no later than July 1, 2010. Existing dischargers shall continue to implement their existing Monitoring Programs in compliance with State Water Board Order No. 99-08-DWQ until the necessary revisions are completed according to the schedule above.

   c. When a change of ownership occurs for all or any portion of the construction site prior to completion or final stabilization, the new discharger shall comply with these requirements as of the date the ownership change occurs.

2. **Objectives**

   The CSMP shall be developed and implemented to address the following objectives:

   a. To demonstrate that the site is in compliance with the Discharge Prohibitions;

b. To determine whether non-visible pollutants are present at the construction site and are causing or contributing to exceedances of water quality objectives;

c. To determine whether immediate corrective actions, additional Best Management Practice (BMP) implementation, or SWPPP revisions are necessary to reduce pollutants in storm water discharges and authorized non-storm water discharges; and

d. To determine whether BMPs included in the SWPPP are effective in preventing or reducing pollutants in storm water discharges and authorized non-storm water discharges.

3. **Risk Level 1 - Visual Monitoring (Inspection) Requirements for Qualifying Rain Events**

a. Risk Level 1 dischargers shall visually observe (inspect) storm water discharges at all discharge locations within two business days (48 hours) after each qualifying rain event.

b. Risk Level 1 dischargers shall visually observe (inspect) the discharge of stored or contained storm water that is derived from and discharged subsequent to a qualifying rain event producing precipitation of ½ inch or more at the time of discharge. Stored or contained storm water that will likely discharge after operating hours due to anticipated precipitation shall be observed prior to the discharge during operating hours.

c. Risk Level 1 dischargers shall conduct visual observations (inspections) during business hours only.

d. Risk Level 1 dischargers shall record the time, date and rain gauge reading of all qualifying rain events.

e. Within 2 business days (48 hours) prior to each qualifying rain event, Risk Level 1 dischargers shall visually observe (inspect):

i. All storm water drainage areas to identify any spills, leaks, or uncontrolled pollutant sources. If needed, the discharger shall implement appropriate corrective actions.

ii. All BMPs to identify whether they have been properly implemented in accordance with the SWPPP. If needed, the discharger shall implement appropriate corrective actions.

iii. Any storm water storage and containment areas to detect leaks and ensure maintenance of adequate freeboard.

f. For the visual observations (inspections) described in e.i and e.iii above, Risk Level 1 dischargers shall observe the presence or absence of floating and suspended materials, a sheen on the surface, discolorations, turbidity, odors, and source(s) of any observed pollutants.

g. Within two business days (48 hours) after each qualifying rain event, Risk Level 1 dischargers shall conduct post rain event visual observations (inspections) to (1) identify whether BMPs were adequately designed, implemented, and effective, and (2) identify additional BMPs and revise the SWPPP accordingly.

h. Risk Level 1 dischargers shall maintain on-site records of all visual observations (inspections), personnel performing the observations, observation dates, weather conditions, locations observed, and corrective actions taken in response to the observations.

4. **Risk Level 1 – Visual Observation Exemptions**

a. Risk Level 1 dischargers shall be prepared to conduct visual observation (inspections) until the minimum requirements of Section I.3 above are completed. Risk Level 1 dischargers are not required to conduct visual observation (inspections) under the following conditions:

i. During dangerous weather conditions such as flooding and electrical storms.

ii. Outside of scheduled site business hours.

b. If no required visual observations (inspections) are collected due to these exceptions, Risk Level 1 dischargers shall include an explanation in their SWPPP and in the Annual Report documenting why the visual observations (inspections) were not conducted.

5. **Risk Level 1 – Monitoring Methods**

Risk Level 1 dischargers shall include a description of the visual observation locations, visual observation procedures, and visual observation follow-up and tracking procedures in the CSMP.

6. **Risk Level 1 – Non-Storm Water Discharge Monitoring Requirements**

a. Visual Monitoring Requirements:

   i. Risk Level 1 dischargers shall visually observe (inspect) each drainage area for the presence of (or indications of prior) unauthorized and authorized non-storm water discharges and their sources.

   ii. Risk Level 1 dischargers shall conduct one visual observation (inspection) quarterly in each of the following periods: January-March, April-June, July-September, and October-December. Visual observation (inspections) are only required during daylight hours (sunrise to sunset).

   iii. Risk Level 1 dischargers shall ensure that visual observations (inspections) document the presence or evidence of any non-storm water discharge (authorized or unauthorized), pollutant characteristics (floating and suspended material, sheen, discoloration, turbidity, odor, etc.), and source. Risk Level 1 dischargers shall maintain on-site records indicating the personnel performing the visual observation (inspections), the dates and approximate time each drainage area and non-storm water discharge was observed, and the response taken to eliminate unauthorized non-storm water discharges and to reduce or prevent pollutants from contacting non-storm water discharges.

7. **Risk Level 1 – Non-Visible Pollutant Monitoring Requirements**

   a. Risk Level 1 dischargers shall collect one or more samples during any breach, malfunction, leakage, or spill observed during a visual inspection which could result in the discharge of pollutants to surface waters that would not be visually detectable in storm water.

   b. Risk Level 1 dischargers shall ensure that water samples are large enough to characterize the site conditions.

   c. Risk Level 1 dischargers shall collect samples at all discharge locations that can be safely accessed.

   d. Risk Level 1 dischargers shall collect samples during the first two hours of discharge from rain events that occur during business hours and which generate runoff.

   e. Risk Level 1 dischargers shall analyze samples for all non-visible pollutant parameters (if applicable) - parameters indicating the

presence of pollutants identified in the pollutant source assessment required (Risk Level 1 dischargers shall modify their CSMPs to address these additional parameters in accordance with any updated SWPPP pollutant source assessment).

f. Risk Level 1 dischargers shall collect a sample of storm water that has not come in contact with the disturbed soil or the materials stored or used on-site (uncontaminated sample) for comparison with the discharge sample.

g. Risk Level 1 dischargers shall compare the uncontaminated sample to the samples of discharge using field analysis or through laboratory analysis.[2]

h. Risk Level 1 dischargers shall keep all field /or analytical data in the SWPPP document.

8. **Risk Level 1 – Particle Size Analysis for Project Risk Justification**

Risk Level 1 dischargers justifying an alternative project risk shall report a soil particle size analysis used to determine the RUSLE K-Factor. ASTM D-422 (Standard Test Method for Particle-Size Analysis of Soils), as revised, shall be used to determine the percentages of sand, very fine sand, silt, and clay on the site.

9. **Risk Level 1 – Records**

Risk Level 1 dischargers shall retain records of all storm water monitoring information and copies of all reports (including Annual Reports) for a period of at least three years. Risk Level 1 dischargers shall retain all records on-site while construction is ongoing. These records include:

a. The date, place, time of facility inspections, sampling, visual observation (inspections), and/or measurements, including precipitation.

b. The individual(s) who performed the facility inspections, sampling, visual observation (inspections), and or measurements.

c. The date and approximate time of analyses.

d. The individual(s) who performed the analyses.

[2] For laboratory analysis, all sampling, sample preservation, and analyses must be conducted according to test procedures under 40 CFR Part 136. Field discharge samples shall be collected and analyzed according to the specifications of the manufacturer of the sampling devices employed.

e. A summary of all analytical results from the last three years, the method detection limits and reporting units, and the analytical techniques or methods used.

f. Rain gauge readings from site inspections.

g. Quality assurance/quality control records and results.

h. Non-storm water discharge inspections and visual observation (inspections) and storm water discharge visual observation records (see Sections I.3 and I.6 above).

i. Visual observation and sample collection exception records (see Section I.4 above).

j. The records of any corrective actions and follow-up activities that resulted from analytical results, visual observation (inspections), or inspections.

ATTACHMENT D
RISK LEVEL 2 REQUIREMENTS

A. Effluent Standards

[These requirements are the same as those in the General Permit order.]

1. Narrative – Risk Level 2 dischargers shall comply with the narrative effluent standards listed below:

    a. Storm water discharges and authorized non-storm water discharges regulated by this General Permit shall not contain a hazardous substance equal to or in excess of reportable quantities established in 40 C.F.R. §§ 117.3 and 302.4, unless a separate NPDES Permit has been issued to regulate those discharges.

    b. Dischargers shall minimize or prevent pollutants in storm water discharges and authorized non-storm water discharges through the use of controls, structures, and management practices that achieve BAT for toxic and non-conventional pollutants and BCT for conventional pollutants.

2. Numeric – Risk level 2 dischargers are subject to a pH NAL of 6.5-8.5, and a turbidity NAL of 250 NTU.

B. Good Site Management "Housekeeping"

1. Risk Level 2 dischargers shall implement good site management (i.e., "housekeeping") measures for construction materials that could potentially be a threat to water quality if discharged. At a minimum, Risk Level 2 dischargers shall implement the following good housekeeping measures:

    a. Conduct an inventory of the products used and/or expected to be used and the end products that are produced and/or expected to be produced. This does not include materials and equipment that are designed to be outdoors and exposed to environmental conditions (i.e. poles, equipment pads, cabinets, conductors, insulators, bricks, etc.).

    b. Cover and berm loose stockpiled construction materials that are not actively being used (i.e. soil, spoils, aggregate, fly-ash, stucco, hydrated lime, etc.).

c. Store chemicals in watertight containers (with appropriate secondary containment to prevent any spillage or leakage) or in a storage shed (completely enclosed).

d. Minimize exposure of construction materials to precipitation. This does not include materials and equipment that are designed to be outdoors and exposed to environmental conditions (i.e. poles, equipment pads, cabinets, conductors, insulators, bricks, etc.).

e. Implement BMPs to prevent the off-site tracking of loose construction and landscape materials.

2. Risk Level 2 dischargers shall implement good housekeeping measures for waste management, which, at a minimum, shall consist of the following:

a. Prevent disposal of any rinse or wash waters or materials on impervious or pervious site surfaces or into the storm drain system.

b. Ensure the containment of sanitation facilities (e.g., portable toilets) to prevent discharges of pollutants to the storm water drainage system or receiving water.

c. Clean or replace sanitation facilities and inspecting them regularly for leaks and spills.

d. Cover waste disposal containers at the end of every business day and during a rain event.

e. Prevent discharges from waste disposal containers to the storm water drainage system or receiving water.

f. Contain and securely protect stockpiled waste material from wind and rain at all times unless actively being used.

g. Implement procedures that effectively address hazardous and non-hazardous spills.

h. Develop a spill response and implementation element of the SWPPP prior to commencement of construction activities. The SWPPP shall require:

i. Equipment and materials for cleanup of spills shall be available on site and that spills and leaks shall be cleaned up immediately and disposed of properly.

ii. Appropriate spill response personnel are assigned and trained.

i. Ensure the containment of concrete washout areas and other washout areas that may contain additional pollutants so there is no discharge into the underlying soil and onto the surrounding areas.

3. Risk Level 2 dischargers shall implement good housekeeping for vehicle storage and maintenance, which, at a minimum, shall consist of the following:

   a. Prevent oil, grease, or fuel to leak in to the ground, storm drains or surface waters.

   b. Place all equipment or vehicles, which are to be fueled, maintained and stored in a designated area fitted with appropriate BMPs.

   c. Clean leaks immediately and disposing of leaked materials properly.

4. Risk Level 2 dischargers shall implement good housekeeping for landscape materials, which, at a minimum, shall consist of the following:

   a. Contain stockpiled materials such as mulches and topsoil when they are not actively being used.

   b. Contain all fertilizers and other landscape materials when they are not actively being used.

   c. Discontinue the application of any erodible landscape material within 2 days before a forecasted rain event or during periods of precipitation.

   d. Apply erodible landscape material at quantities and application rates according to manufacture recommendations or based on written specifications by knowledgeable and experienced field personnel.

   e. Stack erodible landscape material on pallets and covering or storing such materials when not being used or applied.

5. Risk Level 2 dischargers shall conduct an assessment and create a list of potential pollutant sources and identify any areas of the site where additional BMPs are necessary to reduce or prevent pollutants in storm water discharges and authorized non-storm water discharges. This potential pollutant list shall be kept with the SWPPP and shall identify

all non-visible pollutants which are known, or should be known, to occur on the construction site. At a minimum, when developing BMPs, Risk Level 2 dischargers shall do the following:

a. Consider the quantity, physical characteristics (e.g., liquid, powder, solid), and locations of each potential pollutant source handled, produced, stored, recycled, or disposed of at the site.

b. Consider the degree to which pollutants associated with those materials may be exposed to and mobilized by contact with storm water.

c. Consider the direct and indirect pathways that pollutants may be exposed to storm water or authorized non-storm water discharges. This shall include an assessment of past spills or leaks, non-storm water discharges, and discharges from adjoining areas.

d. Ensure retention of sampling, visual observation, and inspection records.

e. Ensure effectiveness of existing BMPs to reduce or prevent pollutants in storm water discharges and authorized non-storm water discharges.

6. Risk Level 2 dischargers shall implement good housekeeping measures on the construction site to control the air deposition of site materials and from site operations. Such particulates can include, but are not limited to, sediment, nutrients, trash, metals, bacteria, oil and grease and organics.

7. **Additional Risk Level 2 Requirement:** Risk Level 2 dischargers shall document all housekeeping BMPs in the SWPPP and REAP(s) in accordance with the nature and phase of the construction project. Construction phases at traditional land development projects include Grading and Land Development Phase, Streets and Utilities, or Vertical Construction for traditional land development projects.

C. Non-Storm Water Management

1. Risk Level 2 dischargers shall implement measures to control all non-storm water discharges during construction.

2. Risk Level 2 dischargers shall wash vehicles in such a manner as to prevent non-storm water discharges to surface waters or MS4 drainage systems.

3. Risk Level 2 dischargers shall clean streets in such a manner as to prevent unauthorized non-storm water discharges from reaching surface water or MS4 drainage systems.

D. Erosion Control

1. Risk Level 2 dischargers shall implement effective wind erosion control.

2. Risk Level 2 dischargers shall provide effective soil cover for inactive[1] areas and all finished slopes, open space, utility backfill, and completed lots.

3. Risk Level 2 dischargers shall limit the use of plastic materials when more sustainable, environmentally friendly alternatives exist. Where plastic materials are deemed necessary, the discharger shall consider the use of plastic materials resistant to solar degradation.

E. Sediment Controls

1. Risk Level 2 dischargers shall establish and maintain effective perimeter controls and stabilize all construction entrances and exits to sufficiently control erosion and sediment discharges from the site.

2. On sites where sediment basins are to be used, Risk Level 2 dischargers shall, at minimum, design sediment basins according to the method provided in CASQA's Construction BMP Guidance Handbook.

3. **Additional Risk Level 2 Requirement:** Risk Level 2 dischargers shall implement appropriate erosion control BMPs (runoff control and soil stabilization) in conjunction with sediment control BMPs for areas under active[2] construction.

4. **Additional Risk Level 2 Requirement:** Risk Level 2 dischargers shall apply linear sediment controls along the toe of the slope, face of the slope, and at the grade breaks of exposed slopes to comply with sheet flow lengths[3] in accordance with Table 1.

---

[1] Inactive areas of construction are areas of construction activity that have been disturbed and are not scheduled to be re-disturbed for at least 14 days.
[2] Active areas of construction are areas undergoing land surface disturbance. This includes construction activity during the preliminary stage, mass grading stage, streets and utilities stage and the vertical construction stage.
[3] Sheet flow length is the length that shallow, low velocity flow travels across a site.

Table 1 - Critical Slope/Sheet Flow Length Combinations

Slope Percentage	Sheet flow length not to exceed
0-25%	20 feet
25-50%	15 feet
Over 50%	10 feet

5. **Additional Risk Level 2 Requirement:** Risk Level 2 dischargers shall ensure that construction activity traffic to and from the project is limited to entrances and exits that employ effective controls to prevent offsite tracking of sediment.

6. **Additional Risk Level 2 Requirement:** Risk Level 2 dischargers shall ensure that all storm drain inlets and perimeter controls, runoff control BMPs, and pollutant controls at entrances and exits (e.g. tire washoff locations) are maintained and protected from activities that reduce their effectiveness.

7. **Additional Risk Level 2 Requirement:** Risk Level 2 dischargers shall inspect on a daily basis all immediate access roads daily. At a minimum daily (when necessary) and prior to any rain event, the discharger shall remove any sediment or other construction activity-related materials that are deposited on the roads (by vacuuming or sweeping).

F. Run-on and Run-off Controls

Risk Level 2 dischargers shall effectively manage all run-on, all runoff within the site and all runoff that discharges off the site. Run-on from off site shall be directed away from all disturbed areas or shall collectively be in compliance with the effluent limitations in this General Permit.

G. Inspection, Maintenance and Repair

1. Risk Level 2 dischargers shall ensure that all inspection, maintenance repair and sampling activities at the project location shall be performed or supervised by a Qualified SWPPP Practitioner (QSP) representing the discharger. The QSP may delegate any or all of these activities to an employee appropriately trained to do the task(s).

2. Risk Level 2 dischargers shall perform weekly inspections and observations, and at least once each 24-hour period during extended storm events, to identify and record BMPs that need maintenance to operate effectively, that have failed, or that could fail to operate as intended. Inspectors shall be the QSP or be trained by the QSP.

3. Upon identifying failures or other shortcomings, as directed by the QSP, Risk Level 2 dischargers shall begin implementing repairs or design changes to BMPs within 72 hours of identification and complete the changes as soon as possible.

4. For each inspection required, Risk Level 2 dischargers shall complete an inspection checklist, using a form provided by the State Water Board or Regional Water Board or in an alternative format.

5. Risk Level 2 dischargers shall ensure that checklists shall remain onsite with the SWPPP and at a minimum, shall include:

   a. Inspection date and date the inspection report was written.

   b. Weather information, including presence or absence of precipitation, estimate of beginning of qualifying storm event, duration of event, time elapsed since last storm, and approximate amount of rainfall in inches.

   c. Site information, including stage of construction, activities completed, and approximate area of the site exposed.

   d. A description of any BMPs evaluated and any deficiencies noted.

   e. If the construction site is safely accessible during inclement weather, list the observations of all BMPs: erosion controls, sediment controls, chemical and waste controls, and non-storm water controls. Otherwise, list the results of visual inspections at all relevant outfalls, discharge points, downstream locations and any projected maintenance activities.

   f. Report the presence of noticeable odors or of any visible sheen on the surface of any discharges.

   g. Any corrective actions required, including any necessary changes to the SWPPP and the associated implementation dates.

   h. Photographs taken during the inspection, if any.

   i. Inspector's name, title, and signature.

H. Rain Event Action Plan

1. **Additional Risk Level 2 Requirement:** The discharger shall ensure a QSP develop a Rain Event Action Plan (REAP) 48 hours prior to any

likely precipitation event. A likely precipitation event is any weather pattern that is forecast to have a 50% or greater probability of producing precipitation in the project area. The discharger shall ensure a QSP obtain a printed copy of precipitation forecast information from the National Weather Service Forecast Office (e.g., by entering the zip code of the project's location at http://www.srh.noaa.gov/forecast).

2. **Additional Risk Level 2 Requirement:** The discharger shall ensure a QSP develop the REAPs for all phases of construction (i.e., Grading and Land Development, Streets and Utilities, Vertical Construction, Final Landscaping and Site Stabilization).

3. **Additional Risk Level 2 Requirement:** The discharger shall ensure a QSP ensure that the REAP include, at a minimum, the following site information:

   a. Site Address
   b. Calculated Risk Level (2 or 3)
   c. Site Storm Water Manager Information including the name, company, and 24-hour emergency telephone number
   d. Erosion and Sediment Control Provider information including the name, company, and 24-hour emergency telephone number
   e. Storm Water Sampling Agent information including the name, company, and 24-hour emergency telephone number

4. **Additional Risk Level 2 Requirement:** The discharger shall ensure a QSP include in the REAP, at a minimum, the following project phase information:

   a. Activities associated with each construction phase
   b. Trades active on the construction site during each construction phase
   c. Trade contractor information
   d. Suggested actions for each project phase

5. **Additional Risk Level 2 Requirement:** The discharger shall ensure a QSP develop additional REAPs for project sites where construction activities are indefinitely halted or postponed (Inactive Construction). At a minimum, Inactive Construction REAPs must include:

   a. Site Address
   b. Calculated Risk Level (2 or 3)
   c. Site Storm Water Manager Information including the name, company, and 24-hour emergency telephone number

d. Erosion and Sediment Control Provider information including the name, company, and 24-hour emergency telephone number
e. Storm Water Sampling Agent information including the name, company, and 24-hour emergency telephone number
f. Trades active on site during Inactive Construction
g. Trade contractor information
h. Suggested actions for inactive construction sites

6. **Additional Risk Level 2 Requirement:** The discharger shall ensure a QSP begin implementation and make the REAP available onsite no later than 24 hours prior to the likely precipitation event.

7. **Additional Risk Level 2 Requirement:** The discharger shall ensure a QSP maintain onsite a paper copy of each REAP onsite in compliance with the record retention requirements of the Special Provisions in this General Permit.

I. Risk Level 2 Monitoring and Reporting Requirements

Table 2- Summary of Monitoring Requirements

Risk Level	Visual Inspections					Sample Collection	
	Quarterly Non-storm Water Discharge	Pre-storm Event		Daily Storm BMP	Post Storm	Storm Water Discharge	Receiving Water
		Baseline	REAP				
2	**X**	**X**	**X**	**X**	**X**	**X**	

1. Construction Site Monitoring Program Requirements

   a. Pursuant to Water Code Sections 13383 and 13267, all dischargers subject to this General Permit shall develop and implement a written site-specific Construction Site Monitoring Program (CSMP) in accordance with the requirements of this Section. The CSMP shall include all monitoring procedures and instructions, location maps, forms, and checklists as required in this section. The CSMP shall be developed prior to the commencement of construction activities, and revised as necessary to reflect project revisions. The CSMP shall be a part of the Storm Water Pollution Prevention Plan (SWPPP), included as an appendix or separate SWPPP chapter.

   b. Existing dischargers registered under the State Water Board Order No. 99-08-DWQ shall make and implement necessary revisions to their Monitoring Program to reflect the changes in this General Permit in a timely manner, but no later than July 1, 2010. Existing dischargers shall continue to implement their existing Monitoring Programs in compliance with State Water Board Order No. 99-08-DWQ until the necessary revisions are completed according to the schedule above.

   c. When a change of ownership occurs for all or any portion of the construction site prior to completion or final stabilization, the new discharger shall comply with these requirements as of the date the ownership change occurs.

2. **Objectives**

   The CSMP shall be developed and implemented to address the following objectives:

a. To demonstrate that the site is in compliance with the Discharge Prohibitions and applicable Numeric Action Levels (NALs)/Numeric Effluent Limitations (NELs) of this General Permit.

b. To determine whether non-visible pollutants are present at the construction site and are causing or contributing to exceedances of water quality objectives.

c. To determine whether immediate corrective actions, additional Best Management Practice (BMP) implementation, or SWPPP revisions are necessary to reduce pollutants in storm water discharges and authorized non-storm water discharges.

d. To determine whether BMPs included in the SWPPP/Rain Event Action Plan (REAP) are effective in preventing or reducing pollutants in storm water discharges and authorized non-storm water discharges.

3. **Risk Level 2 – Visual Monitoring (Inspection) Requirements for Qualifying Rain Events**

a. Risk Level 2 dischargers shall visually observe (inspect) storm water discharges at all discharge locations within two business days (48 hours) after each qualifying rain event.

b. Risk Level 2 dischargers shall visually observe (inspect) the discharge of stored or contained storm water that is derived from and discharged subsequent to a qualifying rain event producing precipitation of ½ inch or more at the time of discharge. Stored or contained storm water that will likely discharge after operating hours due to anticipated precipitation shall be observed prior to the discharge during operating hours.

c. Risk Level 2 dischargers shall conduct visual observations (inspections) during business hours only.

d. Risk Level 2 dischargers shall record the time, date and rain gauge reading of all qualifying rain events.

e. Within 2 business days (48 hours) prior to each qualifying rain event, Risk Level 2 dischargers shall visually observe (inspect):

i. all storm water drainage areas to identify any spills, leaks, or uncontrolled pollutant sources. If needed, the discharger shall implement appropriate corrective actions.

ii. all BMPs to identify whether they have been properly implemented in accordance with the SWPPP/REAP. If needed, the discharger shall implement appropriate corrective actions.

iii. any storm water storage and containment areas to detect leaks and ensure maintenance of adequate freeboard.

f. For the visual observations (inspections) described in c.i and c.iii above, Risk Level 2 dischargers shall observe the presence or absence of floating and suspended materials, a sheen on the surface, discolorations, turbidity, odors, and source(s) of any observed pollutants.

g. Within two business days (48 hours) after each qualifying rain event, Risk Level 2 dischargers shall conduct post rain event visual observations (inspections) to (1) identify whether BMPs were adequately designed, implemented, and effective, and (2) identify additional BMPs and revise the SWPPP accordingly.

h. Risk Level 2 dischargers shall maintain on-site records of all visual observations (inspections), personnel performing the observations, observation dates, weather conditions, locations observed, and corrective actions taken in response to the observations.

4. **Risk Level 2 – Water Quality Sampling and Analysis**

a. Risk Level 2 dischargers shall collect storm water grab samples from sampling locations, as defined in Section I.5. The storm water grab sample(s) obtained shall be representative of the flow and characteristics of the discharge.

b. At minimum, Risk Level 2 dischargers shall collect 3 samples per day of the qualifying event.

c. Risk Level 2 dischargers shall ensure that the grab samples collected of stored or contained storm water are from discharges subsequent to a qualifying rain event (producing precipitation of ½ inch or more at the time of discharge).

<u>Storm Water Effluent Monitoring Requirements</u>

d. Risk Level 2 dischargers shall analyze their effluent samples for:

i. pH and turbidity.

ii. Any additional parameters for which monitoring is required by the Regional Water Board.

5. **Risk Level 2 – Storm Water Discharge Water Quality Sampling Locations**

Effluent Sampling Locations

a. Risk Level 2 dischargers shall perform sampling and analysis of storm water discharges to characterize discharges associated with construction activity from the entire project disturbed area.

b. Risk Level 2 dischargers shall collect effluent samples at all discharge points where storm water is discharged off-site.

c. Risk Level 2 dischargers shall ensure that storm water discharge collected and observed represent[4] the effluent in each drainage area based on visual observation of the water and upstream conditions.

d. Risk Level 2 dischargers shall monitor and report site run-on from surrounding areas if there is reason to believe run-on may contribute to an exceedance of NALs or NELs.

e. Risk Level 2 dischargers who deploy an ATS on their site, or a portion on their site, shall collect ATS effluent samples and measurements from the discharge pipe or another location representative of the nature of the discharge.

f. Risk Level 2 dischargers shall select analytical test methods from the list provided in Table 3 below.

g. All storm water sample collection preservation and handling shall be conducted in accordance with Section I.7 “Storm Water Sample Collection and Handling Instructions” below.

6. **Risk Level 2 – Visual Observation and Sample Collection Exemptions**

a. Risk Level 2 dischargers shall be prepared to collect samples and conduct visual observation (inspections) until the minimum requirements of Sections I.3 and I.4 above are completed. Risk

[4] For example, if there has been concrete work recently in an area, or drywall scrap is exposed to the rain, a pH sample shall be taken of drainage from the relevant work area. Similarly, if sediment laden water is flowing through some parts of a silt fence, samples shall be taken of the sediment-laden water even if most water flowing through the fence is clear.

Level 2 dischargers are not required to physically collect samples or conduct visual observation (inspections) under the following conditions:

i. During dangerous weather conditions such as flooding and electrical storms.

ii. Outside of scheduled site business hours.

b. If no required samples or visual observation (inspections) are collected due to these exceptions, Risk Level 2 dischargers shall include an explanation in their SWPPP and in the Annual Report documenting why the sampling or visual observation (inspections) were not conducted.

7. **Risk Level 2 – Storm Water Sample Collection and Handling Instructions**

a. Risk Level 2 dischargers shall refer to Table 3 below for test methods, detection limits, and reporting units.

b. Risk Level 2 dischargers shall ensure that testing laboratories will receive samples within 48 hours of the physical sampling (unless otherwise required by the laboratory), and shall use only the sample containers provided by the laboratory to collect and store samples.

c. Risk Level 2 dischargers shall designate and train personnel to collect, maintain, and ship samples in accordance with the Surface Water Ambient Monitoring Program's (SWAMP) 2008 Quality Assurance Program Plan (QAPrP).[5]

8. **Risk Level 2 – Monitoring Methods**

a. Risk Level 2 dischargers shall include a description of the following items in the CSMP:

i. Visual observation locations, visual observation procedures, and visual observation follow-up and tracking procedures.

ii. Sampling locations, and sample collection and handling procedures. This shall include detailed procedures for sample

[5] Additional information regarding SWAMP's QAPrP and QAMP can be found at http://www.waterboards.ca.gov/water_issues/programs/swamp/.
QAPrP:http://www.waterboards.ca.gov/water_issues/programs/swamp/docs/qapp/swamp_qapp_master090108a.pdf.
QAMP: http://www.waterboards.ca.gov/water_issues/programs/swamp/qamp.shtml.

collection, storage, preservation, and shipping to the testing lab to assure that consistent quality control and quality assurance is maintained. Dischargers shall attach to the monitoring program an example Chain of Custody form used when handling and shipping samples.

iii. Identification of the analytical methods and related method detection limits (if applicable) for each parameter required in Section I.4 above.

b. Risk Level 2 dischargers shall ensure that all sampling and sample preservation are in accordance with the current edition of "Standard Methods for the Examination of Water and Wastewater" (American Public Health Association). All monitoring instruments and equipment (including a discharger's own field instruments for measuring pH and turbidity) should be calibrated and maintained in accordance with manufacturers' specifications to ensure accurate measurements. Risk Level 2 dischargers shall ensure that all laboratory analyses are conducted according to test procedures under 40 CFR Part 136, unless other test procedures have been specified in this General Permit or by the Regional Water Board. With the exception of field analysis conducted by the discharger for turbidity and pH, all analyses should be sent to and conducted at a laboratory certified for such analyses by the State Department of Health Services. Risk Level 2 dischargers shall conduct their own field analysis of pH and may conduct their own field analysis of turbidity if the discharger has sufficient capability (qualified and trained employees, properly calibrated and maintained field instruments, etc.) to adequately perform the field analysis.

9. **Risk Level 2 – Analytical Methods**

a. Risk Level 2 dischargers shall refer to Table 3 below for test methods, detection limits, and reporting units.

b. **pH**: Risk Level 2 dischargers shall perform pH analysis on-site with a calibrated pH meter or a pH test kit. Risk Level 2 dischargers shall record pH monitoring results on paper and retain these records in accordance with Section I.14, below.

c. **Turbidity**: Risk Level 2 dischargers shall perform turbidity analysis using a calibrated turbidity meter (turbidimeter), either on-site or at an accredited lab. Acceptable test methods include Standard Method 2130 or USEPA Method 180.1. The results will be recorded in the site log book in Nephelometric Turbidity Units (NTU).

10. **Risk Level 2 - Non-Storm Water Discharge Monitoring Requirements**

    a. Visual Monitoring Requirements:

        i. Risk Level 2 dischargers shall visually observe (inspect) each drainage area for the presence of (or indications of prior) unauthorized and authorized non-storm water discharges and their sources.

        ii. Risk Level 2 dischargers shall conduct one visual observation (inspection) quarterly in each of the following periods: January-March, April-June, July-September, and October-December. Visual observation (inspections) are only required during daylight hours (sunrise to sunset).

        iii. Risk Level 2 dischargers shall ensure that visual observations (inspections) document the presence or evidence of any non-storm water discharge (authorized or unauthorized), pollutant characteristics (floating and suspended material, sheen, discoloration, turbidity, odor, etc.), and source. Risk Level 2 dischargers shall maintain on-site records indicating the personnel performing the visual observation (inspections), the dates and approximate time each drainage area and non-storm water discharge was observed, and the response taken to eliminate unauthorized non-storm water discharges and to reduce or prevent pollutants from contacting non-storm water discharges.

    b. Effluent Sampling Locations:

        i. Risk Level 2 dischargers shall sample effluent at all discharge points where non-storm water and/or authorized non-storm water is discharged off-site.

        ii. Risk Level 2 dischargers shall send all non-storm water sample analyses to a laboratory certified for such analyses by the State Department of Health Services.

        iii. Risk Level 2 dischargers shall monitor and report run-on from surrounding areas if there is reason to believe run-on may contribute to an exceedance of NALs.

11. **Risk Level 2 – Non-Visible Pollutant Monitoring Requirements**

a. Risk Level 2 dischargers shall collect one or more samples during any breach, malfunction, leakage, or spill observed during a visual inspection which could result in the discharge of pollutants to surface waters that would not be visually detectable in storm water.

b. Risk Level 2 dischargers shall ensure that water samples are large enough to characterize the site conditions.

c. Risk Level 2 dischargers shall collect samples at all discharge locations that can be safely accessed.

d. Risk Level 2 dischargers shall collect samples during the first two hours of discharge from rain events that occur during business hours and which generate runoff.

e. Risk Level 2 dischargers shall analyze samples for all non-visible pollutant parameters (if applicable) - parameters indicating the presence of pollutants identified in the pollutant source assessment required (Risk Level 2 dischargers shall modify their CSMPs to address these additional parameters in accordance with any updated SWPPP pollutant source assessment).

f. Risk Level 2 dischargers shall collect a sample of storm water that has not come in contact with the disturbed soil or the materials stored or used on-site (uncontaminated sample) for comparison with the discharge sample.

g. Risk Level 2 dischargers shall compare the uncontaminated sample to the samples of discharge using field analysis or through laboratory analysis.[6]

h. Risk Level 2 dischargers shall keep all field /or analytical data in the SWPPP document.

12. **Risk Level 2 – Watershed Monitoring Option**

Risk Level 2 dischargers who are part of a qualified regional watershed-based monitoring program may be eligible for relief from the requirements in Sections I.5. The Regional Water Board may approve proposals to substitute an acceptable watershed-based monitoring program by determining if the watershed-based monitoring program

[6] For laboratory analysis, all sampling, sample preservation, and analyses must be conducted according to test procedures under 40 CFR Part 136. Field discharge samples shall be collected and analyzed according to the specifications of the manufacturer of the sampling devices employed.

will provide substantially similar monitoring information in evaluating discharger compliance with the requirements of this General Permit.

13. **Risk Level 2 – Particle Size Analysis for Project Risk Justification**

Risk Level 2 dischargers justifying an alternative project risk shall report a soil particle size analysis used to determine the RUSLE K-Factor. ASTM D-422 (Standard Test Method for Particle-Size Analysis of Soils), as revised, shall be used to determine the percentages of sand, very fine sand, silt, and clay on the site.

14. **Risk Level 2 – Records**

Risk Level 2 dischargers shall retain records of all storm water monitoring information and copies of all reports (including Annual Reports) for a period of at least three years. Risk Level 2 dischargers shall retain all records on-site while construction is ongoing. These records include:

a. The date, place, time of facility inspections, sampling, visual observation (inspections), and/or measurements, including precipitation.

b. The individual(s) who performed the facility inspections, sampling, visual observation (inspections), and or measurements.

c. The date and approximate time of analyses.

d. The individual(s) who performed the analyses.

e. A summary of all analytical results from the last three years, the method detection limits and reporting units, the analytical techniques or methods used, and the chain of custody forms.

f. Rain gauge readings from site inspections;

g. Quality assurance/quality control records and results.

h. Non-storm water discharge inspections and visual observation (inspections) and storm water discharge visual observation records (see Sections I.3 and I.10 above).

i. Visual observation and sample collection exception records (see Section I.6 above).

j. The records of any corrective actions and follow-up activities that resulted from analytical results, visual observation (inspections), or inspections.

15. **Risk Level 2 – NAL Exceedance Report**

a. In the event that any effluent sample exceeds an applicable NAL, Risk Level 2 dischargers shall electronically submit all storm event sampling results to the State Water Board no later than 10 days after the conclusion of the storm event. The Regional Boards have the authority to require the submittal of an NAL Exceedance Report.

b. Risk Level 2 dischargers shall certify each NAL Exceedance Report in accordance with the Special Provisions for Construction Activity.

c. Risk Level 2 dischargers shall retain an electronic or paper copy of each NAL Exceedance Report for a minimum of three years after the date the annual report is filed.

d. Risk Level 2 dischargers shall include in the NAL Exceedance Report:

i. The analytical method(s), method reporting unit(s), and method detection limit(s) of each analytical parameter (analytical results that are less than the method detection limit shall be reported as “less than the method detection limit”).

ii. The date, place, time of sampling, visual observation (inspections), and/or measurements, including precipitation.

iii. A description of the current BMPs associated with the effluent sample that exceeded the NAL and the proposed corrective actions taken.

Table 3 – Risk Level 2 Test Methods, Detection Limits, Reporting Units and Applicable NALs/NELs

Parameter	Test Method / Protocol	Discharge Type	Min. Detection Limit	Reporting Units	Numeric Action Level
pH	Field test with calibrated portable instrument	Risk Level 2 Discharges	0.2	pH units	lower NAL = 6.5 upper NAL = 8.5
Turbidity	EPA 0180.1 and/or field test with calibrated portable instrument	Risk Level 2 Discharges other than ATS	1	NTU	250 NTU
		For ATS discharges	1	NTU	N/A

ATTACHMENT E
RISK LEVEL 3 REQUIREMENTS

A. Effluent Standards

[These requirements are the same as those in the General Permit order.]

1. Narrative – Risk Level 3 dischargers shall comply with the narrative effluent standards listed below:

    a. Storm water discharges and authorized non-storm water discharges regulated by this General Permit shall not contain a hazardous substance equal to or in excess of reportable quantities established in 40 C.F.R. §§ 117.3 and 302.4, unless a separate NPDES Permit has been issued to regulate those discharges.

    b. Dischargers shall minimize or prevent pollutants in storm water discharges and authorized non-storm water discharges through the use of controls, structures, and management practices that achieve BAT for toxic and non-conventional pollutants and BCT for conventional pollutants.

2. Numeric –Risk Level 3 dischargers are subject to a pH NAL of 6.5-8.5, and a turbidity NAL of 250 NTU. In addition, Risk Level 3 dischargers are subject to a pH NEL of 6.0-9.0 and a turbidity NEL of 500 NTU.

B. Good Site Management "Housekeeping"

1. Risk Level 3 dischargers shall implement good site management (i.e., "housekeeping") measures for construction materials that could potentially be a threat to water quality if discharged. At a minimum, Risk Level 3 dischargers shall implement the following good housekeeping measures:

    a. Conduct an inventory of the products used and/or expected to be used and the end products that are produced and/or expected to be produced. This does not include materials and equipment that are designed to be outdoors and exposed to environmental conditions (i.e. poles, equipment pads, cabinets, conductors, insulators, bricks, etc.).

    b. Cover and berm loose stockpiled construction materials that are not actively being used (i.e. soil, spoils, aggregate, fly-ash, stucco, hydrated lime, etc.).

c. Store chemicals in watertight containers (with appropriate secondary containment to prevent any spillage or leakage) or in a storage shed (completely enclosed).

d. Minimize exposure of construction materials to precipitation. This does not include materials and equipment that are designed to be outdoors and exposed to environmental conditions (i.e. poles, equipment pads, cabinets, conductors, insulators, bricks, etc.).

e. Implement BMPs to prevent the off-site tracking of loose construction and landscape materials.

2. Risk Level 3 dischargers shall implement good housekeeping measures for waste management, which, at a minimum, shall consist of the following:

a. Prevent disposal of any rinse or wash waters or materials on impervious or pervious site surfaces or into the storm drain system.

b. Ensure the containment of sanitation facilities (e.g., portable toilets) to prevent discharges of pollutants to the storm water drainage system or receiving water.

c. Clean or replace sanitation facilities and inspecting them regularly for leaks and spills.

d. Cover waste disposal containers at the end of every business day and during a rain event.

e. Prevent discharges from waste disposal containers to the storm water drainage system or receiving water.

f. Contain and securely protecting stockpiled waste material from wind and rain at all times unless actively being used.

g. Implement procedures that effectively address hazardous and non-hazardous spills.

h. Develop a spill response and implementation element of the SWPPP prior to commencement of construction activities. The SWPPP shall require that:

i. Equipment and materials for cleanup of spills shall be available on site and that spills and leaks shall be cleaned up immediately and disposed of properly; and

ii. Appropriate spill response personnel are assigned and trained.

i. Ensure the containment of concrete washout areas and other washout areas that may contain additional pollutants so there is no discharge into the underlying soil and onto the surrounding areas.

3. Risk Level 3 dischargers shall implement good housekeeping for vehicle storage and maintenance, which, at a minimum, shall consist of the following:

   a. Prevent oil, grease, or fuel to leak in to the ground, storm drains or surface waters.

   b. Place all equipment or vehicles, which are to be fueled, maintained and stored in a designated area fitted with appropriate BMPs.

   c. Clean leaks immediately and disposing of leaked materials properly.

4. Risk Level 3 dischargers shall implement good housekeeping for landscape materials, which, at a minimum, shall consist of the following:

   a. Contain stockpiled materials such as mulches and topsoil when they are not actively being used.

   b. Contain fertilizers and other landscape materials when they are not actively being used.

   c. Discontinuing the application of any erodible landscape material within 2 days before a forecasted rain event or during periods of precipitation.

   d. Applying erodible landscape material at quantities and application rates according to manufacture recommendations or based on written specifications by knowledgeable and experienced field personnel.

   e. Stacking erodible landscape material on pallets and covering or storing such materials when not being used or applied.

5. Risk Level 3 dischargers shall conduct an assessment and create a list of potential pollutant sources and identify any areas of the site where additional BMPs are necessary to reduce or prevent pollutants in storm water discharges and authorized non-storm water discharges. This potential pollutant list shall be kept with the SWPPP and shall identify

all non-visible pollutants which are known, or should be known, to occur on the construction site. At a minimum, when developing BMPs, Risk Level 3 dischargers shall do the following:

a. Consider the quantity, physical characteristics (e.g., liquid, powder, solid), and locations of each potential pollutant source handled, produced, stored, recycled, or disposed of at the site.

b. Consider the degree to which pollutants associated with those materials may be exposed to and mobilized by contact with storm water.

c. Consider the direct and indirect pathways that pollutants may be exposed to storm water or authorized non-storm water discharges. This shall include an assessment of past spills or leaks, non-storm water discharges, and discharges from adjoining areas.

d. Ensure retention of sampling, visual observation, and inspection records.

e. Ensure effectiveness of existing BMPs to reduce or prevent pollutants in storm water discharges and authorized non-storm water discharges.

6. Risk Level 3 dischargers shall implement good housekeeping measures on the construction site to control the air deposition of site materials and from site operations. Such particulates can include, but are not limited to, sediment, nutrients, trash, metals, bacteria, oil and grease and organics.

7. **Additional Risk Level 3 Requirement:** Risk Level 3 dischargers shall document all housekeeping BMPs in the SWPPP and REAP(s) in accordance with the nature and phase of the construction project. Construction phases at traditional land development projects include Grading and Land Development Phase, Streets and Utilities, or Vertical Construction for traditional land development projects.

C. Non-Storm Water Management

1. Risk Level 3 dischargers shall implement measures to control all non-storm water discharges during construction.

2. Risk Level 3 dischargers shall wash vehicles in such a manner as to prevent non-storm water discharges to surface waters or MS4 drainage systems.

3. Risk Level 3 dischargers shall clean streets in such a manner as to prevent unauthorized non-storm water discharges from reaching surface water or MS4 drainage systems.

D. Erosion Control

1. Risk Level 3 dischargers shall implement effective wind erosion control.

2. Risk Level 3 dischargers shall provide effective soil cover for inactive[1] areas and all finished slopes, open space, utility backfill, and completed lots.

3. Dischargers shall limit the use of plastic materials when more sustainable, environmentally friendly alternatives exist. Where plastic materials are deemed necessary, the discharger shall consider the use of plastic materials resistant to solar degradation.

E. Sediment Controls

1. Risk Level 3 dischargers shall establish and maintain effective perimeter controls and stabilize all construction entrances and exits to sufficiently control erosion and sediment discharges from the site.

2. On sites where sediment basins are to be used, Risk Level 3 dischargers shall, at minimum, design sediment basins according to the method provided in CASQA's Construction BMP Guidance Handbook.

3. **Additional Risk Level 3 Requirement:** Risk Level 3 dischargers shall implement appropriate erosion control BMPs (runoff control and soil stabilization) in conjunction with sediment control BMPs for areas under active[2] construction.

4. **Additional Risk Level 3 Requirement:** Risk Level 3 dischargers shall apply linear sediment controls along the toe of the slope, face of the slope, and at the grade breaks of exposed slopes to comply with sheet flow lengths[3] in accordance with Table 1.

---

[1] Inactive areas of construction are areas of construction activity that have been disturbed and are not scheduled to be re-disturbed for at least 14 days.
[2] Active areas of construction are areas undergoing land surface disturbance. This includes construction activity during the preliminary stage, mass grading stage, streets and utilities stage and the vertical construction stage
[3] Sheet flow length is the length that shallow, low velocity flow travels across a site.

Table 1 - Critical Slope/Sheet Flow Length Combinations

Slope Percentage	Sheet flow length not to exceed
0-25%	20 feet
25-50%	15 feet
Over 50%	10 feet

5. **Additional Risk Level 3 Requirement:** Risk Level 3 dischargers shall ensure that construction activity traffic to and from the project is limited to entrances and exits that employ effective controls to prevent offsite tracking of sediment.

6. **Additional Risk Level 3 Requirement:** Risk Level 3 dischargers shall ensure that all storm drain inlets and perimeter controls, runoff control BMPs, and pollutant controls at entrances and exits (e.g. tire washoff locations) are maintained and protected from activities that reduce their effectiveness.

7. **Additional Risk Level 3 Requirement:** Risk Level 3 dischargers shall inspect on a daily basis all immediate access roads daily. At a minimum daily (when necessary) and prior to any rain event, the discharger shall remove any sediment or other construction activity-related materials that are deposited on the roads (by vacuuming or sweeping).

8. **Additional Risk Level 3 Requirement:** The Regional Water Board may require Risk Level 3 dischargers to implement additional site-specific sediment control requirements if the implementation of the other requirements in this section are not adequately protecting the receiving waters.

F. Run-on and Run-off Controls

Risk Level 3 dischargers shall effectively manage all run-on, all runoff within the site and all runoff that discharges off the site. Run-on from off site shall be directed away from all disturbed areas or shall collectively be in compliance with the effluent limitations in this General Permit.

G. Inspection, Maintenance and Repair

1. Risk Level 3 dischargers shall ensure that all inspection, maintenance repair and sampling activities at the project location shall be performed or supervised by a Qualified SWPPP Practitioner (QSP) representing the discharger. The QSP may delegate any or all of these activities to an employee appropriately trained to do the task(s).

2. Risk Level 3 dischargers shall perform weekly inspections and observations, and at least once each 24-hour period during extended storm events, to identify and record BMPs that need maintenance to operate effectively, that have failed, or that could fail to operate as intended. Inspectors shall be the QSP or be trained by the QSP.

3. Upon identifying failures or other shortcomings, as directed by the QSP, Risk Level 3 dischargers shall begin implementing repairs or design changes to BMPs within 72 hours of identification and complete the changes as soon as possible.

4. For each inspection required, Risk Level 3 dischargers shall complete an inspection checklist, using a form provided by the State Water Board or Regional Water Board or in an alternative format.

5. Risk Level 3 dischargers shall ensure that checklists shall remain onsite with the SWPPP and at a minimum, shall include:

    a. Inspection date and date the inspection report was written.

    b. Weather information, including presence or absence of precipitation, estimate of beginning of qualifying storm event, duration of event, time elapsed since last storm, and approximate amount of rainfall in inches.

    c. Site information, including stage of construction, activities completed, and approximate area of the site exposed.

    d. A description of any BMPs evaluated and any deficiencies noted.

    e. If the construction site is safely accessible during inclement weather, list the observations of all BMPs: erosion controls, sediment controls, chemical and waste controls, and non-storm water controls. Otherwise, list the results of visual inspections at all relevant outfalls, discharge points, downstream locations and any projected maintenance activities.

    f. Report the presence of noticeable odors or of any visible sheen on the surface of any discharges.

    g. Any corrective actions required, including any necessary changes to the SWPPP and the associated implementation dates.

    h. Photographs taken during the inspection, if any.

i. Inspector's name, title, and signature.

H. Rain Event Action Plan

1. **Additional Risk Level 3 Requirement:** The discharger shall ensure a QSP develop a Rain Event Action Plan (REAP) 48 hours prior to any likely precipitation event. A likely precipitation event is any weather pattern that is forecast to have a 50% or greater probability of producing precipitation in the project area. The QSP shall obtain a printed copy of precipitation forecast information from the National Weather Service Forecast Office (e.g., by entering the zip code of the project's location at http://www.srh.noaa.gov/forecast).

2. **Additional Risk Level 3 Requirement:** The discharger shall ensure a QSP develop the REAPs for all phases of construction (i.e., Grading and Land Development, Streets and Utilities, Vertical Construction, Final Landscaping and Site Stabilization).

3. **Additional Risk Level 3 Requirement:** The discharger shall ensure a QSP ensure that the REAP include, at a minimum, the following site information:

   a. Site Address.
   b. Calculated Risk Level (2 or 3).
   c. Site Storm Water Manager Information including the name, company, and 24-hour emergency telephone number.
   d. Erosion and Sediment Control Provider information including the name, company, and 24-hour emergency telephone number.
   e. Storm Water Sampling Agent information including the name, company, and 24-hour emergency telephone number.

4. **Additional Risk Level 3 Requirement:** The QSP shall include in the REAP, at a minimum, the following project phase information:

   a. Activities associated with each construction phase.
   b. Trades active on the construction site during each construction phase.
   c. Trade contractor information.
   d. Suggested actions for each project phase.

5. **Additional Risk Level 3 Requirement:** The QSP shall develop additional REAPs for project sites where construction activities are indefinitely halted or postponed (Inactive Construction). At a minimum, Inactive Construction REAPs must include:

a. Site Address.
b. Calculated Risk Level (2 or 3).
c. Site Storm Water Manager Information including the name, company, and 24-hour emergency telephone number.
d. Erosion and Sediment Control Provider information including the name, company, and 24-hour emergency telephone number.
e. Storm Water Sampling Agent information including the name, company, and 24-hour emergency telephone number.
f. Trades active on site during Inactive Construction.
g. Trade contractor information.
h. Suggested actions for inactive construction sites.

6. **Additional Risk Level 3 Requirement:** The discharger shall ensure a QSP begin implementation and make the REAP available onsite no later than 24 hours prior to the likely precipitation event.

7. **Additional Risk Level 3 Requirement:** The discharger shall ensure a QSP maintain onsite a paper copy of each REAP onsite in compliance with the record retention requirements of the Special Provisions in this General Permit.

I. Risk Level 3 Monitoring and Reporting Requirements

Table 2- Summary of Monitoring Requirements

Risk Level	Visual Inspections					Sample Collection	
	Quarterly Non-storm Water Discharge	Pre-storm Event		Daily Storm BMP	Post Storm	Storm Water Discharge	Receiving Water
		Baseline	REAP				
3	X	X	X	X	X	X	X[4]

1. Construction Site Monitoring Program Requirements

   a. Pursuant to Water Code Sections 13383 and 13267, all dischargers subject to this General Permit shall develop and implement a written site-specific Construction Site Monitoring Program (CSMP) in accordance with the requirements of this Section. The CSMP shall include all monitoring procedures and instructions, location maps, forms, and checklists as required in this section. The CSMP shall be developed prior to the commencement of construction activities, and revised as necessary to reflect project revisions. The CSMP shall be a part of the Storm Water Pollution Prevention Plan (SWPPP), included as an appendix or separate SWPPP chapter.

   b. Existing dischargers registered under the State Water Board Order No. 99-08-DWQ shall make and implement necessary revisions to their Monitoring Program to reflect the changes in this General Permit in a timely manner, but no later than July 1, 2010. Existing dischargers shall continue to implement their existing Monitoring Program in compliance with State Water Board Order No. 99-08-DWQ until the necessary revisions are completed according to the schedule above.

   c. When a change of ownership occurs for all or any portion of the construction site prior to completion or final stabilization, the new discharger shall comply with these requirements as of the date the ownership change occurs.

2. **Objectives**

   The CSMP shall be developed and implemented to address the following objectives:

[4] When NEL exceeded

a. To demonstrate that the site is in compliance with the Discharge Prohibitions and applicable Numeric Action Levels (NALs)/Numeric Effluent Limitations (NELs) of this General Permit.

b. To determine whether non-visible pollutants are present at the construction site and are causing or contributing to exceedances of water quality objectives.

c. To determine whether immediate corrective actions, additional Best Management Practice (BMP) implementation, or SWPPP revisions are necessary to reduce pollutants in storm water discharges and authorized non-storm water discharges.

d. To determine whether BMPs included in the SWPPP/Rain Event Action Plan (REAP) are effective in preventing or reducing pollutants in storm water discharges and authorized non-storm water discharges.

3. **Risk Level 3 – Visual Monitoring (Inspection) Requirements for Qualifying Rain Events**

a. Risk Level 3 dischargers shall visually observe (inspect) storm water discharges at all discharge locations within two business days (48 hours) after each qualifying rain event.

b. Risk Level 3 dischargers shall visually observe (inspect) the discharge of stored or contained storm water that is derived from and discharged subsequent to a qualifying rain event producing precipitation of ½ inch or more at the time of discharge. Stored or contained storm water that will likely discharge after operating hours due to anticipated precipitation shall be observed prior to the discharge during operating hours.

c. Risk Level 3 dischargers shall conduct visual observations (inspections) during business hours only.

d. Risk Level 3 dischargers shall record the time, date and rain gauge reading of all qualifying rain events.

e. Within 2 business days (48 hours) prior to each qualifying rain event, Risk Level 3 dischargers shall visually observe (inspect):

i. all storm water drainage areas to identify any spills, leaks, or uncontrolled pollutant sources. If needed, the discharger shall implement appropriate corrective actions.

ii. all BMPs to identify whether they have been properly implemented in accordance with the SWPPP/REAP. If needed, the discharger shall implement appropriate corrective actions.

iii. any storm water storage and containment areas to detect leaks and ensure maintenance of adequate freeboard.

f. For the visual observations (inspections) described in c.i. and c.iii above, Risk Level 3 dischargers shall observe the presence or absence of floating and suspended materials, a sheen on the surface, discolorations, turbidity, odors, and source(s) of any observed pollutants.

g. Within two business days (48 hours) after each qualifying rain event, Risk Level 3 dischargers shall conduct post rain event visual observations (inspections) to (1) identify whether BMPs were adequately designed, implemented, and effective, and (2) identify additional BMPs and revise the SWPPP accordingly.

h. Risk Level 3 dischargers shall maintain on-site records of all visual observations (inspections), personnel performing the observations, observation dates, weather conditions, locations observed, and corrective actions taken in response to the observations.

4. **Risk Level 3 – Water Quality Sampling and Analysis**

a. Risk Level 3 dischargers shall collect storm water grab samples from sampling locations, as defined in Section I.5. The storm water grab sample(s) obtained shall be representative of the flow and characteristics of the discharge.

b. At minimum, Risk Level 3 dischargers shall collect 3 samples per day of the qualifying event.

c. Risk Level 3 dischargers shall ensure that the grab samples collected of stored or contained storm water are from discharges subsequent to a qualifying rain event (producing precipitation of ½ inch or more at the time of discharge).

<u>Storm Water Effluent Monitoring Requirements</u>

d. Risk Level 3 dischargers shall analyze their effluent samples for:

i. pH and turbidity.

ii. Any additional parameters for which monitoring is required by the Regional Water Board.

e. Risk 3 dischargers shall electronically submit all storm event sampling results to the State Water Board no later than 5 days after the conclusion of the storm event.

f. Risk Level 3 discharger sites that have violated the turbidity daily average NEL shall analyze subsequent effluent samples for all the parameters specified in Section I.4.e, above, and Suspended Sediment Concentration (SSC).

Receiving Water Monitoring Requirements

g. In the event that a Risk Level 3 discharger violates an NEL contained in this General Permit and has a direct discharge into receiving waters, the Risk Level 3 discharger shall subsequently sample receiving waters (RWs) for all parameter(s) required in Section I.4.e above for the duration of coverage under this General Permit.

h. Risk Level 3 dischargers disturbing 30 acres or more of the landscape and with direct discharges into receiving waters shall conduct or participate in benthic macroinvertebrate bioassessment of RWs prior to commencement of construction activity (See Appendix 3).

i. Risk Level 3 dischargers shall obtain RW samples in accordance with the Receiving Water sampling location section (Section I.5), below.

5. **Risk Level 3 – Storm Water Discharge Water Quality Sampling Locations**

Effluent Sampling Locations

a. Risk Level 3 dischargers shall perform sampling and analysis of storm water discharges to characterize discharges associated with construction activity from the entire project disturbed area.

b. Risk Level 3 dischargers shall collect effluent samples at all discharge points where storm water is discharged off-site.

c. Risk Level 3 dischargers shall ensure that storm water discharge collected and observed represent[5] the effluent in each drainage area based on visual observation of the water and upstream conditions.

d. Risk Level 3 dischargers shall monitor and report site run-on from surrounding areas if there is reason to believe run-on may contribute to an exceedance of NALs or NELs.

e. Risk Level 3 dischargers who deploy an ATS on their site, or a portion on their site, shall collect ATS effluent samples and measurements from the discharge pipe or another location representative of the nature of the discharge.

f. Risk Level 3 dischargers shall select analytical test methods from the list provided in Table 3 below.

g. All storm water sample collection preservation and handling shall be conducted in accordance with Section I.7 “Storm Water Sample Collection and Handling Instructions” below.

Receiving Water Sampling Locations

h. **Upstream/up-gradient RW samples**: Risk Level 3 dischargers shall obtain any required upstream/up-gradient receiving water samples from a representative and accessible location as close as possible and upstream from the effluent discharge point.

i. **Downstream/down-gradient RW samples**: Risk Level 3 dischargers shall obtain any required downstream/down-gradient receiving water samples from a representative and accessible location as close as possible and downstream from the effluent discharge point.

j. If two or more discharge locations discharge to the same receiving water, Risk Level 3 dischargers may sample the receiving water at a single upstream and downstream location.

[5] For example, if there has been concrete work recently in an area, or drywall scrap is exposed to the rain, a pH sample shall be taken of drainage from the relevant work area. Similarly, if sediment-laden water is flowing through some parts of a silt fence, samples shall be taken of the sediment laden water even if most water flowing through the fence is clear.

6. **Risk Level 3 – Visual Observation and Sample Collection Exemptions**

   a. Risk Level 3 dischargers shall be prepared to collect samples and conduct visual observation (inspections) until the minimum requirements of Sections I.3 and I.4 above are completed. Risk Level 3 dischargers are not required to physically collect samples or conduct visual observation (inspections) under the following conditions:

      i. During dangerous weather conditions such as flooding and electrical storms.

      ii. Outside of scheduled site business hours.

   b. If no required samples or visual observation (inspections) are collected due to these exceptions, Risk Level 3 dischargers shall include an explanation in their SWPPP and in the Annual Report documenting why the sampling or visual observation (inspections) were not conducted.

7. **Risk Level 3 – Storm Water Sample Collection and Handling Instructions**

   a. Risk Level 3 dischargers shall refer to Table 3 below for test methods, detection limits, and reporting units.

   b. Risk Level 3 dischargers shall ensure that testing laboratories will receive samples within 48 hours of the physical sampling (unless otherwise required by the laboratory), and shall use only the sample containers provided by the laboratory to collect and store samples.

   c. Risk Level 3 dischargers shall designate and train personnel to collect, maintain, and ship samples in accordance with the Surface Water Ambient Monitoring Program's (SWAMP) 2008 Quality Assurance Program Plan (QAPrP).[6]

[6] Additional information regarding SWAMP's QAPrP and QAMP can be found at http://www.waterboards.ca.gov/water_issues/programs/swamp/.
QAPrP:http://www.waterboards.ca.gov/water_issues/programs/swamp/docs/qapp/swamp_qapp_master090108a.pdf
QAMP: http://www.waterboards.ca.gov/water_issues/programs/swamp/qamp.shtml

8. **Risk Level 3 – Monitoring Methods**

   a. Risk Level 3 dischargers shall include a description of the following items in the CSMP:

      i. Visual observation locations, visual observation procedures, and visual observation follow-up and tracking procedures.

      ii. Sampling locations, and sample collection and handling procedures. This shall include detailed procedures for sample collection, storage, preservation, and shipping to the testing lab to assure that consistent quality control and quality assurance is maintained. Dischargers shall attach to the monitoring program an example Chain of Custody form used when handling and shipping samples.

      iii. Identification of the analytical methods and related method detection limits (if applicable) for each parameter required in Section I.4 above.

   b. Risk Level 3 dischargers shall ensure that all sampling and sample preservation are in accordance with the current edition of "Standard Methods for the Examination of Water and Wastewater" (American Public Health Association). All monitoring instruments and equipment (including a discharger's own field instruments for measuring pH and turbidity) should be calibrated and maintained in accordance with manufacturers' specifications to ensure accurate measurements. Risk Level 3 dischargers shall ensure that all laboratory analyses are conducted according to test procedures under 40 CFR Part 136, unless other test procedures have been specified in this General Permit or by the Regional Water Board. With the exception of field analysis conducted by the discharger for turbidity and pH, all analyses should be sent to and conducted at a laboratory certified for such analyses by the State Department of Health Services (SSC exception). Risk Level 3 dischargers shall conduct their own field analysis of pH and may conduct their own field analysis of turbidity if the discharger has sufficient capability (qualified and trained employees, properly calibrated and maintained field instruments, etc.) to adequately perform the field analysis.

9. **Risk Level 3 – Analytical Methods**

   a. Risk Level 3 dischargers shall refer to Table 3 below for test methods, detection limits, and reporting units.

b. **pH**: Risk Level 3 dischargers shall perform pH analysis on-site with a calibrated pH meter or a pH test kit. Risk Level 3 dischargers shall record pH monitoring results on paper and retain these records in accordance with Section I.14, below.

c. **Turbidity**: Risk Level 3 dischargers shall perform turbidity analysis using a calibrated turbidity meter (turbidimeter), either on-site or at an accredited lab. Acceptable test methods include Standard Method 2130 or USEPA Method 180.1. The results will be recorded in the site log book in Nephelometric Turbidity Units (NTU).

d. **Suspended sediment concentration (SSC)**: Risk Level 3 dischargers shall perform SSC analysis using ASTM Method D3977-97.

e. **Bioassessment**: Risk Level 3 dischargers shall perform bioassessment sampling and analysis according to Appendix 3 of this General Permit.

10. **Risk Level 3 - Non-Storm Water Discharge Monitoring Requirements**

a. Visual Monitoring Requirements:

i. Risk Level 3 dischargers shall visually observe (inspect) each drainage area for the presence of (or indications of prior) unauthorized and authorized non-storm water discharges and their sources.

ii. Risk Level 3 dischargers shall conduct one visual observation (inspection) quarterly in each of the following periods: January-March, April-June, July-September, and October-December. Visual observation (inspections) are only required during daylight hours (sunrise to sunset).

iii. Risk Level 3 dischargers shall ensure that visual observations (inspections) document the presence or evidence of any non-storm water discharge (authorized or unauthorized), pollutant characteristics (floating and suspended material, sheen, discoloration, turbidity, odor, etc.), and source. Risk Level 3 dischargers shall maintain on-site records indicating the personnel performing the visual observation (inspections), the dates and approximate time each drainage area and non-storm water discharge was observed, and the response taken to eliminate unauthorized non-storm water discharges and to

reduce or prevent pollutants from contacting non-storm water discharges.

b. Effluent Sampling Locations:

i. Risk Level 3 dischargers shall sample effluent at all discharge points where non-storm water and/or authorized non-storm water is discharged off-site.

ii. Risk Level 3 dischargers shall send all non-storm water sample analyses to a laboratory certified for such analyses by the State Department of Health Services.

iii. Risk Level 3 dischargers shall monitor and report run-on from surrounding areas if there is reason to believe run-on may contribute to an exceedance of NALs or NELs.

11. **Risk Level 3 – Non-Visible Pollutant Monitoring Requirements**

a. Risk Level 3 dischargers shall collect one or more samples during any breach, malfunction, leakage, or spill observed during a visual inspection which could result in the discharge of pollutants to surface waters that would not be visually detectable in storm water.

b. Risk Level 3 dischargers shall ensure that water samples are large enough to characterize the site conditions.

c. Risk Level 3 dischargers shall collect samples at all discharge locations that can be safely accessed.

d. Risk Level 3 dischargers shall collect samples during the first two hours of discharge from rain events that occur during business hours and which generate runoff.

e. Risk Level 3 dischargers shall analyze samples for all non-visible pollutant parameters (if applicable) - parameters indicating the presence of pollutants identified in the pollutant source assessment required (Risk Level 3 dischargers shall modify their CSMPs to address these additional parameters in accordance with any updated SWPPP pollutant source assessment).

f. Risk Level 3 dischargers shall collect a sample of storm water that has not come in contact with the disturbed soil or the materials stored or used on-site (uncontaminated sample) for comparison with the discharge sample.

g. Risk Level 3 dischargers shall compare the uncontaminated sample to the samples of discharge using field analysis or through laboratory analysis.[7]

h. Risk Level 3 dischargers shall keep all field /or analytical data in the SWPPP document.

12. **Risk Level 3 – Watershed Monitoring Option**

Risk Level 3 dischargers who are part of a qualified regional watershed-based monitoring program may be eligible for relief from the requirements in Sections I.5. The Regional Water Board may approve proposals to substitute an acceptable watershed-based monitoring program by determining if the watershed-based monitoring program will provide substantially similar monitoring information in evaluating discharger compliance with the requirements of this General Permit.

13. **Risk Level 3 – Particle Size Analysis for Project Risk Justification**

Risk Level 3 dischargers justifying an alternative project risk shall report a soil particle size analysis used to determine the RUSLE K-Factor. ASTM D-422 (Standard Test Method for Particle-Size Analysis of Soils), as revised, shall be used to determine the percentages of sand, very fine sand, silt, and clay on the site.

14. **Risk Level 3 – Records**

Risk Level 3 dischargers shall retain records of all storm water monitoring information and copies of all reports (including Annual Reports) for a period of at least three years. Risk Level 3 dischargers shall retain all records on-site while construction is ongoing. These records include:

a. The date, place, time of facility inspections, sampling, visual observation (inspections), and/or measurements, including precipitation.

b. The individual(s) who performed the facility inspections, sampling, visual observation (inspections), and or measurements.

c. The date and approximate time of analyses.

[7] For laboratory analysis, all sampling, sample preservation, and analyses must be conducted according to test procedures under 40 CFR Part 136. Field discharge samples shall be collected and analyzed according to the specifications of the manufacturer of the sampling devices employed.

d. The individual(s) who performed the analyses.

e. A summary of all analytical results from the last three years, the method detection limits and reporting units, the analytical techniques or methods used, and the chain of custody forms.

f. Rain gauge readings from site inspections.

g. Quality assurance/quality control records and results.

h. Non-storm water discharge inspections and visual observation (inspections) and storm water discharge visual observation records (see Sections I.3 and I.10 above).

i. Visual observation and sample collection exception records (see Section I.6 above).

j. The records of any corrective actions and follow-up activities that resulted from analytical results, visual observation (inspections), or inspections.

15. **Risk Level 3 – NAL Exceedance Report**

a. In the event that any effluent sample exceeds an applicable NAL, Risk Level 3 dischargers shall electronically submit all storm event sampling results to the State Water Board no later than 10 days after the conclusion of the storm event. The Regional Boards have the authority to require the submittal of an NAL Exceedance Report.

b. Risk Level 3 dischargers shall certify each NAL Exceedance Report in accordance with the Special Provisions for Construction Activity In this General Permit.

c. Risk Level 3 dischargers shall retain an electronic or paper copy of each NAL Exceedance Report for a minimum of three years after the date the annual report is filed.

d. Risk Level 3 dischargers shall include in the NAL Exceedance Report:

i. The analytical method(s), method reporting unit(s), and method detection limit(s) of each analytical parameter (analytical results that are less than the method detection limit shall be reported as “less than the method detection limit”).

ii. The date, place, time of sampling, visual observation (inspections), and/or measurements, including precipitation.

iii. A description of the current BMPs associated with the effluent sample that exceeded the NAL and the proposed corrective actions taken.

16. **Risk Level 3 – NEL Violation Report**

a. Risk Level 3 dischargers shall electronically submit all storm event sampling results to the State Water Board no later than 5 days after the conclusion of the storm event.

b. In the event that a discharger has violated an applicable NEL, Risk Level 3 dischargers shall submit an NEL Violation Report to the State Water Board within 24 hours after the NEL exceedance has been identified.

c. Risk Level 3 dischargers shall certify each NEL Violation Report in accordance with the Special Provisions for Construction Activity in this General Permit.

d. Risk Level 3 dischargers shall retain an electronic or paper copy of each NEL Violation Report for a minimum of three years after the date the annual report is filed.

e. Risk Level 3 dischargers shall include in the NEL Violation Report:

i. The analytical method(s), method reporting unit(s), and method detection limit(s) of each analytical parameter (analytical results that are less than the method detection limit shall be reported as “less than the method detection limit”);

ii. The date, place, time of sampling, visual observation (inspections), and/or measurements, including precipitation; and

iii. A Description of the current onsite BMPs, and the proposed corrective actions taken to manage the NEL exceedance.

f. Compliance Storm Exemption - In the event that an applicable NEL has been exceeded during a storm event equal to or larger than the Compliance Storm Event, Risk level 3 discharger shall report the on-site rain gauge reading and nearby governmental rain gauge readings for verification.

17. **Risk Level 3 – Bioassessment**

a. Risk Level 3 dischargers with a total project-related ground disturbance exceeding 30 acres shall:

i. Conduct bioassessment monitoring, as described in Appendix 3.

ii. Include the collection and reporting of specified in stream biological data and physical habitat.

iii. Use the bioassessment sample collection and Quality Assurance & Quality Control (QA/QC) protocols developed by the State of California's Surface Water Ambient Monitoring Program (SWAMP).[8]

b. Risk Level 3 dischargers qualifying for bioassessment, where construction commences out of an index period for the site location shall:

i. Receive Regional Board approval for the sampling exception.

ii. Conduct bioassessment monitoring, as described in Appendix 3.

iii. Include the collection and reporting of specified instream biological data and physical habitat.

iv. Use the bioassessment sample collection and Quality Assurance & Quality Control (QA/QC) protocols developed by the State of California's Surface Water Ambient Monitoring Program (SWAMP).

OR

v. Make a check payable to: Cal State Chico Foundation (SWAMP Bank Account) or San Jose State Foundation (SWAMP Bank Account) and include the WDID# on the check for the amount calculated for the exempted project.

vi. Send a copy of the check to the Regional Water Board office for the site's region.

vii. Invest $**7,500.00 X The number of samples required** into the SWAMP program as compensation (upon regional board approval).

[8] http://www.waterboards.ca.gov/water_issues/programs/swamp/.

Table 3 – Risk Level 3 Test Methods, Detection Limits, Reporting Units and Applicable NALs/NELs

Parameter	Test Method / Protocol	Discharge Type	Min. Detection Limit	Reporting Units	Numeric Action Level	Numeric Effluent Limitation
pH	Field test with calibrated portable instrument	Risk Level 3 Discharges	0.2	pH units	lower NAL = 6.5 upper NAL = 8.5	lower NEL = 6.0 upper NEL = 9.0
Turbidity	EPA 0180.1 and/or field test with calibrated portable instrument	Risk Level 3 Discharges other than ATS	1	NTU	250 NTU	500 NTU
		For ATS discharges	1	NTU	N/A	10 NTU for Daily Weighted Average & 20 NTU for Any Single Sample
SSC	ASTM Method D 3977-97[9]	Risk Level 3 (if NEL exceeded)	5	mg/L	N/A	N/A
Bioassessment	(STE) Level I of (SAFIT),[10] fixed-count of 600 org/sample	Risk Level 3 projects> 30 acres	N/A	N/A	N/A	N/A

[9] ASTM, 1999, Standard Test Method for Determining Sediment Concentration in Water Samples: American Society of Testing and Materials, D 3977-97, Vol. 11.02, pp. 389-394.

[10] The current SAFIT STEs (28 November 2006) list requirements for both the Level I and Level II taxonomic effort, and are located at: http://www.swrcb.ca.gov/swamp/docs/safit/ste_list.pdf. When new editions are published by SAFIT, they will supersede all previous editions. All editions will be posted at the State Water Board's SWAMP website.

ATTACHMENT F:
Active Treatment System (ATS) Requirements

Table 1 – Numeric Effluent Limitations, Numeric Action Levels, Test Methods, Detection Limits, and Reporting Units

Parameter	Test Method	Discharge Type	Min. Detection Limit	Units	Numeric Action Level	Numeric Effluent Limitation
Turbidity	EPA 0180.1 and/or field test with a calibrated portable instrument	For ATS discharges	1	NTU	N/A	10 NTU for Daily Flow-Weighted Average & 20 NTU for Any Single Sample

A. Dischargers choosing to implement an Active Treatment System (ATS) on their site shall comply with all of the requirements in this Attachment.

B. The discharger shall maintain a paper copy of each ATS specification onsite in compliance with the record retention requirements in the Special Provisions of this General Permit.

C. ATS Design, Operation and Submittals

1. The ATS shall be designed and approved by a Certified Professional in Erosion and Sediment Control (CPESC), a Certified Professional in Storm Water Quality (CPSWQ); a California registered civil engineer; or any other California registered engineer.

2. The discharger shall ensure that the ATS is designed in a manner to preclude the accidental discharge of settled floc[1] during floc pumping or related operations.

3. The discharger shall design outlets to dissipate energy from concentrated flows.

4. The discharger shall install and operate an ATS by assigning a lead person (or project manager) who has either a minimum of five years construction storm

[1] Floc is defined as a clump of solids formed by the chemical action in ATS systems.

water experience or who is a licensed contractors specifically holding a California Class A Contractors license.[2]

5. The discharger shall prepare an ATS Plan that combines the site-specific data and treatment system information required to safely and efficiently operate an ATS. The ATS Plan shall be electronically submitted to the State Water Board at least 14 days prior to the planned operation of the ATS and a paper copy shall be available onsite during ATS operation. At a minimum, the ATS Plan shall include:

   a. ATS Operation and Maintenance Manual for All Equipment.

   b. ATS Monitoring, Sampling & Reporting Plan, including Quality Assurance/Quality Control (QA/QC).

   c. ATS Health and Safety Plan.

   d. ATS Spill Prevention Plan.

6. The ATS shall be designed to capture and treat (within a 72-hour period) a volume equivalent to the runoff from a 10-year, 24-hour storm event using a watershed runoff coefficient of 1.0.

D. Treatment – Chemical Coagulation/Flocculation

1. Jar tests shall be conducted using water samples selected to represent typical site conditions and in accordance with ASTM D2035-08 (2003).

2. The discharger shall conduct, at minimum, six site-specific jar tests (per polymer with one test serving as a control) for each project to determine the proper polymer and dosage levels for their ATS.

3. Single field jar tests may also be conducted during a project if conditions warrant, for example if construction activities disturb changing types of soils, which consequently cause change in storm water and runoff characteristics.

E. Residual Chemical and Toxicity Requirements

1. The discharger shall utilize a residual chemical test method that has a method detection limit (MDL) of 10% or less than the maximum allowable threshold

[2] Business and Professions Code Division 3, Chapter 9, Article 4, Class A Contractor: A general engineering contractor is a contractor whose principal contracting business is in connection with fixed works requiring specialized engineering knowledge and skill. [http://www.cslb.ca.gov/General-Information/library/licensing-classifications.asp].

concentration[3] (MATC) for the specific coagulant in use and for the most sensitive species of the chemical used.

2. The discharger shall utilize a residual chemical test method that produces a result within one hour of sampling.

3. The discharger shall have a California State certified laboratory validate the selected residual chemical test. Specifically the lab will review the test protocol, test parameters, and the detection limit of the coagulant. The discharger shall electronically submit this documentation as part of the ATS Plan.

4. If the discharger cannot utilize a residual chemical test method that meets the requirements above, the discharger shall operate the ATS in Batch Treatment[4] mode.

5. A discharger planning to operate in Batch Treatment mode shall perform toxicity testing in accordance with the following:

   a. The discharger shall initiate acute toxicity testing on effluent samples representing effluent from each batch prior to discharge[5]. All bioassays shall be sent to a laboratory certified by the Department of Health Services (DHS) Environmental Laboratory Accreditation Program (ELAP). The required field of testing number for Whole Effluent Toxicity (WET) testing is E113.[6]

   b. Acute toxicity tests shall be conducted with the following species and protocols. The methods to be used in the acute toxicity testing shall be those outlined for a 96-hour acute test in "Methods for Measuring the Acute Toxicity of Effluents and Receiving Water to Freshwater and Marine Organisms, USEPA-841-R-02-012" for Fathead minnow, *Pimephales promelas* (fathead minnow). Acute toxicity for *Oncorhynchus mykiss* (Rainbow Trout) may be used as a substitute for testing fathead minnows.

   c. All toxicity tests shall meet quality assurance criteria and test acceptability criteria in the most recent versions of the EPA test method for WET testing.

   d. The discharger shall electronically report all acute toxicity testing.

---

[3] The Maximum Allowable Threshold Concentration (MATC) is the allowable concentration of residual, or dissolved, coagulant/flocculant in effluent. The MATC shall be coagulant/flocculant-specific, and based on toxicity testing conducted by an independent, third-party laboratory. A typical MATC would be:
The MATC is equal to the geometric mean of the NOEC (No Observed Effect Concentration) and LOEC (Lowest Observed Effect Concentration) Acute and Chronic toxicity results for most sensitive species determined for the specific coagulant. The most sensitive species test shall be used to determine the MATC.

[4] Batch Treatment mode is defined as holding or recirculating the treated water in a holding basin or tank(s) until treatment is complete or the basin or storage tank(s) is full.

[5] This requirement only requires that the test be initiated prior to discharge.

[6] http://www.dhs.ca.gov/ps/ls/elap/pdf/FOT_Desc.pdf.

F. Filtration

1. The ATS shall include a filtration step between the coagulant treatment train and the effluent discharge. This is commonly provided by sand, bag, or cartridge filters, which are sized to capture suspended material that might pass through the clarifier tanks.

2. Differential pressure measurements shall be taken to monitor filter loading and confirm that the final filter stage is functioning properly.

G. Residuals Management

1. Sediment shall be removed from the storage or treatment cells as necessary to ensure that the cells maintain their required water storage (i.e., volume) capability.

2. Handling and disposal of all solids generated during ATS operations shall be done in accordance with all local, state, and federal laws and regulations.

H. ATS Instrumentation

1. The ATS shall be equipped with instrumentation that automatically measures and records effluent water quality data and flow rate.

2. The minimum data recorded shall be consistent with the Monitoring and Reporting requirements below, and shall include:

   a. Influent Turbidity

   b. Effluent Turbidity

   c. Influent pH

   d. Effluent pH

   e. Residual Chemical

   f. Effluent Flow rate

   g. Effluent Flow volume

3. Systems shall be equipped with a data recording system, such as data loggers or webserver-based systems, which records each measurement on a frequency no longer than once every 15 minutes.

4. Cumulative flow volume shall be recorded daily. The data recording system shall have the capacity to record a minimum of seven days continuous data.

5. Instrumentation systems shall be interfaced with system control to provide auto shutoff or recirculation in the event that effluent measurements exceed turbidity or pH.

6. The system shall also assure that upon system upset, power failure, or other catastrophic event, the ATS will default to a recirculation mode or safe shut down.

7. Instrumentation (flow meters, probes, valves, streaming current detectors, controlling computers, etc.) shall be installed and maintained per manufacturer's recommendations, which shall be included in the QA/QC plan.

8. The QA/QC plan shall also specify calibration procedures and frequencies, instrument method detection limit or sensitivity verification, laboratory duplicate procedures, and other pertinent procedures.

9. The instrumentation system shall include a method for controlling coagulant dose, to prevent potential overdosing. Available technologies include flow/turbidity proportional metering, periodic jar testing and metering pump adjustment, and ionic charge measurement controlling the metering pump.

I. ATS Effluent Discharge

1. ATS effluent shall comply with all provisions and prohibitions in this General Permit, specifically the NELs.

2. NELs for discharges from an ATS:

   a. Turbidity of all ATS discharges shall be less than 10 NTU for daily flow-weighted average of all samples and 20 NTU for any single sample.

   b. Residual Chemical shall be < 10% of MATC[7] for the most sensitive species of the chemical used.

3. If an analytical effluent sampling result is outside the range of pH NELs (i.e., is below the lower NEL for pH or exceeds the upper NEL for pH) or exceeds the turbidity NEL (as listed in Table 1), the discharger is in violation of this General

[7] The Maximum Allowable Threshold Concentration (MATC) is the allowable concentration of residual, or dissolved, coagulant/flocculant in effluent. The MATC shall be coagulant/flocculant-specific, and based on toxicity testing conducted by an independent, third-party laboratory. The MATC is equal to the geometric mean of the NOEC (No Observed Effect Concentration) and LOEC (Lowest Observed Effect Concentration) Acute and Chronic toxicity results for most sensitive species determined for the specific coagulant. The most sensitive species test shall be used to determine the MATC.

Permit and shall electronically file the results in violation within 24-hours of obtaining the results.

4. If ATS effluent is authorized to discharge into a sanitary sewer system, the discharger shall comply with any pre-treatment requirements applicable for that system. The discharger shall include any specific criteria required by the municipality in the ATS Plan.

5. Compliance Storm Event:

   Discharges of storm water from ATS shall comply with applicable NELs (above) unless the storm event causing the discharges is determined after the fact to be equal to or larger than the Compliance Storm Event (expressed in inches of rainfall). The Compliance Storm Event for ATS discharges is the 10 year, 24 hour storm, as determined using these maps:

   http://www.wrcc.dri.edu/pcpnfreq/nca10y24.gif
   http://www.wrcc.dri.edu/pcpnfreq/sca10y24.gif

   This exemption is dependent on the submission of rain gauge data verifying the storm event is equal to or larger than the Compliance Storm.

J. Operation and Maintenance Plan

1. Each Project shall have a site-specific Operation and Maintenance (O&M) Manual covering the procedures required to install, operate and maintain the ATS.[8]

2. The O&M Manual shall only be used in conjunction with appropriate project-specific design specifications that describe the system configuration and operating parameters.

3. The O&M Manual shall have operating manuals for specific pumps, generators, control systems,and other equipment.

K. Sampling and Reporting Quality Assurance/ Quality Check (QA/QC) Plan

4. A project-specific QA/QC Plan shall be developed for each project. The QA/QC Plan shall include at a minimum:

   a. Calibration – Calibration methods and frequencies for all system and field instruments shall be specified.

[8] The manual is typically in a modular format covering generalized procedures for each component that is utilized in a particular system.

b. Method Detection Limits (MDLs) – The methods for determining MDLs shall be specified for each residual coagulant measurement method. Acceptable minimum MDLs for each method, specific to individual coagulants, shall be specified.

c. Laboratory Duplicates – Requirements for monthly laboratory duplicates for residual coagulant analysis shall be specified.

L. Personnel Training

1. Operators shall have training specific to using an ATS and liquid coagulants for storm water discharges in California.

2. The training shall be in the form of a formal class with a certificate and requirements for testing and certificate renewal.

3. Training shall include a minimum of eight hours classroom and 32 hours field training. The course shall cover the following topics:

   a. Coagulation Basics –Chemistry and physical processes

   b. ATS System Design and Operating Principles

   c. ATS Control Systems

   d. Coagulant Selection – Jar testing, dose determination, etc.

   e. Aquatic Safety/Toxicity of Coagulants, proper handling and safety

   f. Monitoring, Sampling, and Analysis

   g. Reporting and Recordkeeping

   h. Emergency Response

M. Active Treatment System (ATS) Monitoring Requirements

Any discharger who deploys an ATS on their site shall conduct the following:

1. Visual Monitoring

   a. A designated responsible person shall be on site daily at all times during treatment operations.

b. Daily on-site visual monitoring of the system for proper performance shall be conducted and recorded in the project data log.

   i. The log shall include the name and phone number of the person responsible for system operation and monitoring.

   ii. The log shall include documentation of the responsible person's training.

2. Operational and Compliance Monitoring

   a. Flow shall be continuously monitored and recorded at not greater than 15-minute intervals for total volume treated and discharged.

   b. Influent and effluent pH must be continuously monitored and recorded at not greater than 15-minute intervals.

   c. Influent and effluent turbidity (expressed in NTU) must be continuously monitored and recorded at not greater than 15-minute intervals.

   d. The type and amount of chemical used for pH adjustment, if any, shall be monitored and recorded.

   e. Dose rate of chemical used in the ATS system (expressed in mg/L) shall be monitored and reported 15-minutes after startup and every 8 hours of operation.

   f. Laboratory duplicates – monthly laboratory duplicates for residual coagulant analysis must be performed and records shall be maintained onsite.

   g. Effluent shall be monitored and recorded for residual chemical/additive levels.

   h. If a residual chemical/additive test does not exist and the ATS is operating in a batch treatment mode of operation refer to the toxicity monitoring requirements below.

3. Toxicity Monitoring

   A discharger operating in batch treatment mode shall perform toxicity testing in accordance with the following:

   a. The discharger shall initiate acute toxicity testing on effluent samples representing effluent from each batch prior to discharge.[9] All bioassays shall be sent to a laboratory certified by the Department of Health Services (DHS)

[9] This requirement only requires that the test be initiated prior to discharge.

Environmental Laboratory Accreditation Program (ELAP). The required field of testing number for Whole Effluent Toxicity (WET) testing is E113.[10]

b. Acute toxicity tests shall be conducted with the following species and protocols. The methods to be used in the acute toxicity testing shall be those outlined for a 96-hour acute test in "Methods for Measuring the Acute Toxicity of Effluents and Receiving Water to Freshwater and Marine Organisms, USEPA-841-R-02-012" for Fathead minnow, *Pimephales promelas or* Rainbow trout *Oncorhynchus mykiss* may be used as a substitute for fathead minnow.

c. All toxicity tests shall meet quality assurance criteria and test acceptability criteria in the most recent versions of the EPA test method for WET testing.[11]

4. Reporting and Recordkeeping

At a minimum, every 30 days a LRP representing the discharger shall access the State Water Boards Storm Water Mulit-Application and Report Tracking system (SMARTS) and electronically upload field data from the ATS. Records must be kept for three years after the project is completed .

5. Non-compliance Reporting

a. Any indications of toxicity or other violations of water quality objectives shall be reported to the appropriate regulatory agency as required by this General Permit.

b. Upon any measurements that exceed water quality standards, the system operator shall immediately notify his supervisor or other responsible parties, who shall notify the Regional Water Board.

c. If any monitoring data exceeds any applicable NEL in this General Permit, the discharger shall electronically submit a NEL Violation Report to the State Water Board within 24 hours after the NEL exceedance has been identified.

i. ATS dischargers shall certify each NEL Violation Report in accordance with the Special Provisions for Construction Activity in this General Permit.

ii. ATS dischargers shall retain an electronic or paper copy of each NEL Violation Report for a minimum of three years after the date the annual report is filed.

iii. ATS dischargers shall include in the NEL Violation Report:

[10] http://www.dhs.ca.gov/ps/ls/elap/pdf/FOT_Desc.pdf.
[11] http://www.epa.gov/waterscience/methods/wet/.

(1) The analytical method(s), method reporting unit(s), and method detection limit(s) of each analytical parameter (analytical results that are less than the method detection limit shall be reported as “less than the method detection limit”);

(2) The date, place, time of sampling, visual observation (inspections), and/or measurements, including precipitation; and

(3) A description of the current onsite BMPs, and the proposed corrective actions taken to manage the NEL exceedance.

iv. Compliance Storm Exemption - In the event that an applicable NEL has been exceeded during a storm event equal to or larger than the Compliance Storm Event, ATS dischargers shall report the on-site rain gauge reading and nearby governmental rain gauge readings for verification.

Risk Determination Worksheet

Step 1 Determine Sediment Risk via one of the options listed:

1. GIS Map Method - EPA Rainfall Erosivity Calculator & GIS map
2. Individual Method - EPA Rainfall Erosivity Calculator & Individual Data

Step 2 Determine Receiving Water Risk via one of the options listed:

1. GIS map of Sediment Sensitive Watersheds provided (in development)
2. List of Sediment Sensitive Watersheds provided

Step 3 Determine Combined Risk Level

Sediment Risk Factor Worksheet	Entry

A) R Factor

Analyses of data indicated that when factors other than rainfall are held constant, soil loss is directly proportional to a rainfall factor composed of total storm kinetic energy (E) times the maximum 30-min intensity (I30) (Wischmeier and Smith, 1958). The numerical value of R is the average annual sum of EI30 for storm events during a rainfall record of at least 22 years. "Isoerodent" maps were developed based on R values calculated for more than 1000 locations in the Western U.S. Refer to the link below to determine the R factor for the project site.

http://cfpub.epa.gov/npdes/stormwater/LEW/lewCalculator.cfm

R Factor Value	0

B) K Factor (weighted average, by area, for all site soils)

The soil-erodibility factor K represents: (1) susceptibility of soil or surface material to erosion, (2) transportability of the sediment, and (3) the amount and rate of runoff given a particular rainfall input, as measured under a standard condition. Fine-textured soils that are high in clay have low K values (about 0.05 to 0.15) because the particles are resistant to detachment. Coarse-textured soils, such as sandy soils, also have low K values (about 0.05 to 0.2) because of high infiltration resulting in low runoff even though these particles are easily detached. Medium-textured soils, such as a silt loam, have moderate K values (about 0.25 to 0.45) because they are moderately susceptible to particle detachment and they produce runoff at moderate rates. Soils having a high silt content are especially susceptible to erosion and have high K values, which can exceed 0.45 and can be as large as 0.65. Silt-size particles are easily detached and tend to crust, producing high rates and large volumes of runoff. Use Site-specific data must be submitted.

Site-specific K factor guidance

K Factor Value	0

C) LS Factor (weighted average, by area, for all slopes)

The effect of topography on erosion is accounted for by the LS factor, which combines the effects of a hillslope-length factor, L, and a hillslope-gradient factor, S. Generally speaking, as hillslope length and/or hillslope gradient increase, soil loss increases. As hillslope length increases, total soil loss and soil loss per unit area increase due to the progressive accumulation of runoff in the downslope direction. As the hillslope gradient increases, the velocity and erosivity of runoff increases. Use the LS table located in separate tab of this spreadsheet to determine LS factors. Estimate the weighted LS for the site prior to construction.

LS Table

LS Factor Value	0

Watershed Erosion Estimate (=RxKxLS) in tons/acre	0
Site Sediment Risk Factor Low Sediment Risk: < 15 tons/acre Medium Sediment Risk: >=15 and <75 tons/acre High Sediment Risk: >= 75 tons/acre	**Low**

For the GIS Map Method, the R factor for the project is calculated using the online calculator at (see cell to right). The product of K and LS are shown on the figure below. To determine soil loss in tons per acre, multiply the R factor times the value for K times LS from the map.
http://cfpub.epa.gov/npdes/stormwater/LEW/lewCalculator.cfm

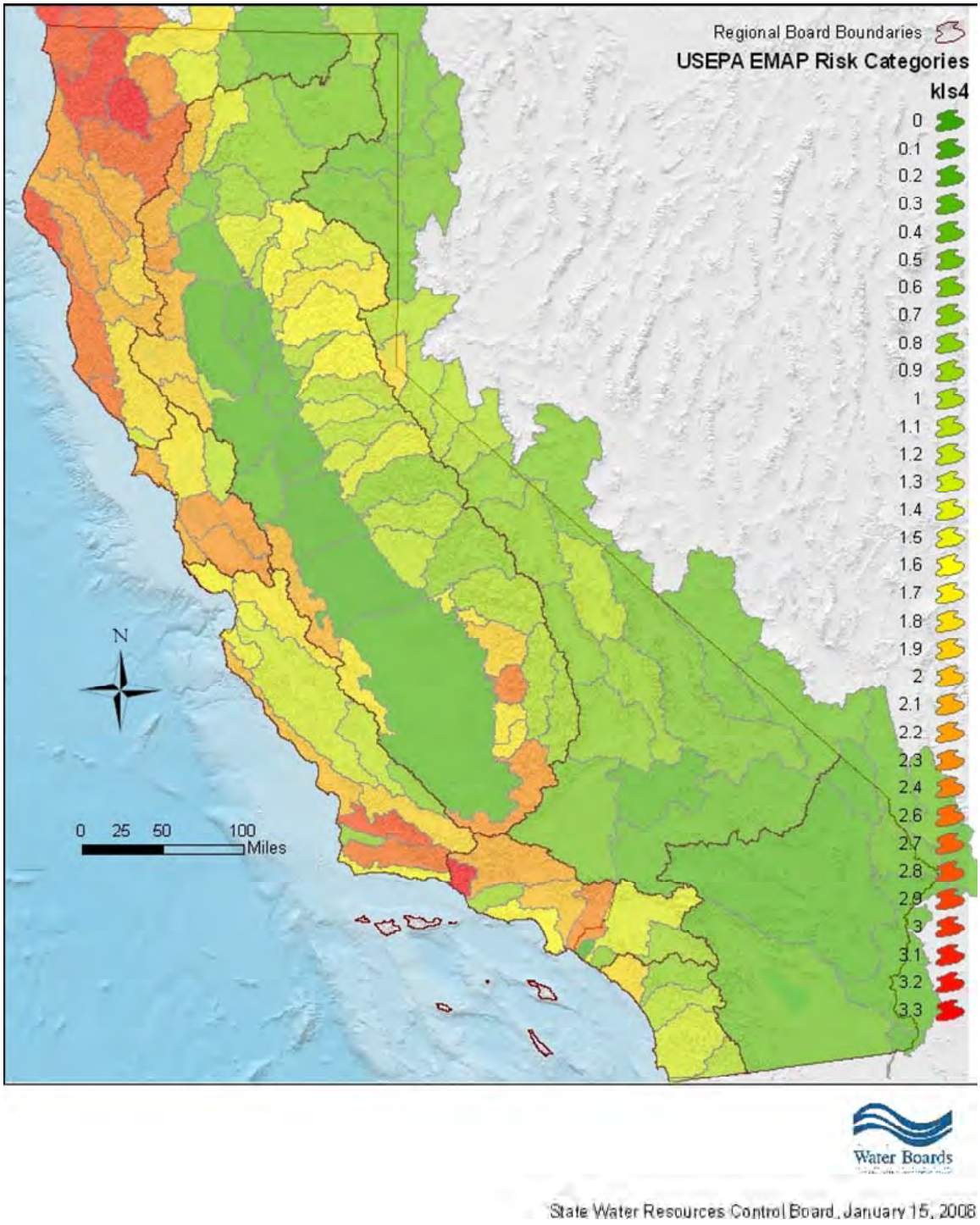

Receiving Water (RW) Risk Factor Worksheet	**Entry**	**Score**
A. Watershed Characteristics	**yes/no**	
A.1. Does the disturbed area discharge (either directly or indirectly) to a **303(d)-listed waterbody impaired by sediment**? (For help with impaired waterbodies please check the attached worksheet or visit the link below) or has a **USEPA approved TMDL implementation plan for sediment**?: 2006 Approved Sediment-impared WBs Worksheet http://www.waterboards.ca.gov/water_issues/programs/tmdl/303d_lists2006_epa.shtml **OR**	**Yes**	**High**
A.2. Does the disturbed area discharge to a waterbody with designated beneficial uses of SPAWN & COLD & MIGRATORY? http://www.ice.ucdavis.edu/geowbs/asp/wbquse.asp		

Combined Risk Level Matrix

Receiving Water Risk	Sediment Risk: Low	Sediment Risk: Medium	Sediment Risk: High
Low	Level 1	Level 2	
High	Level 2		Level 3

Project Sediment Risk: **Low**

Project RW Risk: **High**

Project Combined Risk: **Level 2**

Soil Erodibility Factor (K)

The K factor can be determined by using the nomograph method, which requires that a particle size analysis (ASTM D-422) be done to determine the percentages of sand, very fine sand, silt and clay. Use the figure below to determine appropriate K value.

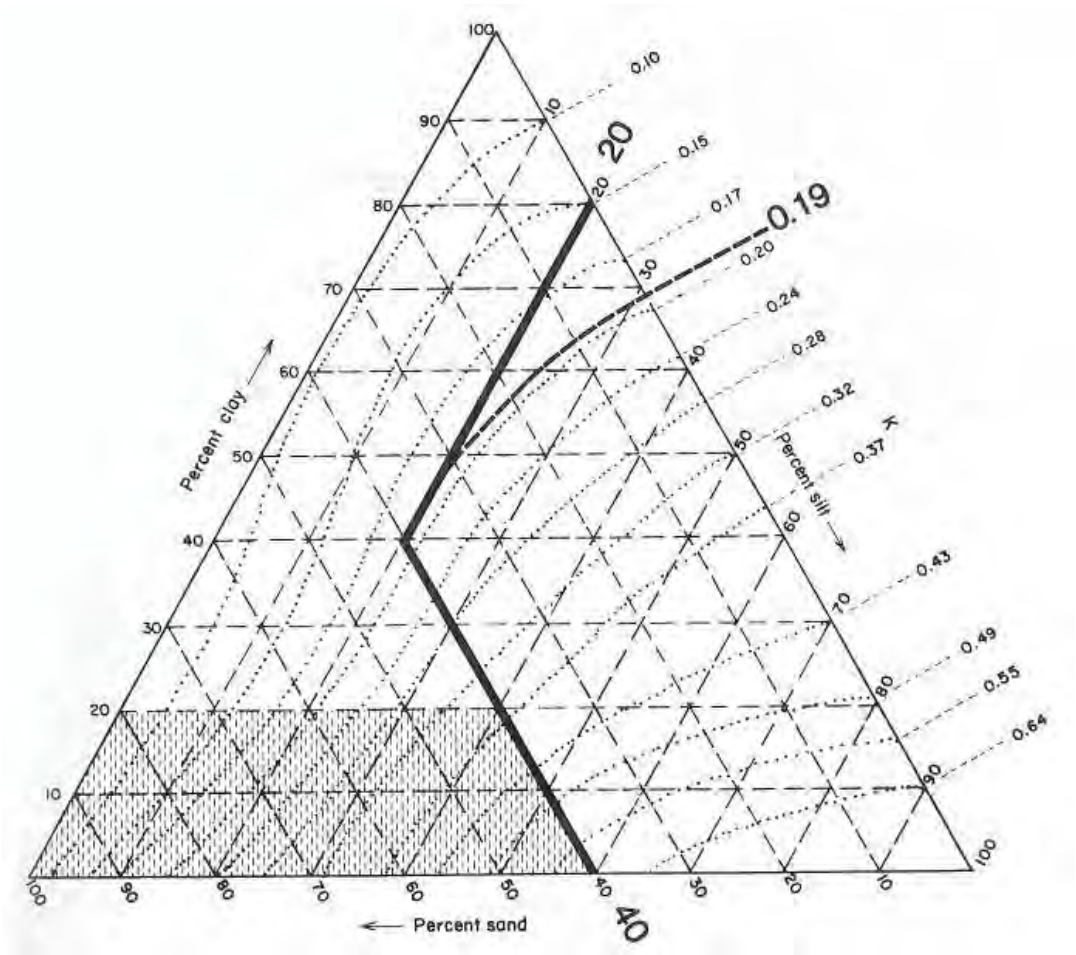

Erickson triangular nomograph used to estimate soil erodibility (K) factor.
The figure above is the USDA nomograph used to determine the K factor for a soil, based on its texture (% silt plus very fine sand, % sand, % organic matter, soil structure, and permeability).
Nomograph from Erickson 1977 as referenced in Goldman et. al., 1986.

Sheet Flow Length (ft)	Average Watershed Slope (%) 0.2	0.5	1.0	2.0	3.0	4.0	5.0	6.0	8.0	10.0	12.0	14.0	16.0	20.0	
<3	0.05	0.07	0.09	0.13	0.17	0.20	0.23	0.26	0.32	0.35	0.36	0.38	0.39	0.41	
6	0.05	0.07	0.09	0.13	0.17	0.20	0.23	0.26	0.32	0.37	0.41	0.45	0.49	0.56	
9	0.05	0.07	0.09	0.13	0.17	0.20	0.23	0.26	0.32	0.38	0.45	0.51	0.56	0.67	
12	0.05	0.07	0.09	0.13	0.17	0.20	0.23	0.26	0.32	0.39	0.47	0.55	0.62	0.76	
15	0.05	0.07	0.09	0.13	0.17	0.20	0.23	0.26	0.32	0.40	0.49	0.58	0.67	0.84	
25	0.05	0.07	0.10	0.16	0.21	0.26	0.31	0.36	0.45	0.57	0.71	0.85	0.98	1.24	
50	0.05	0.08	0.13	0.21	0.30	0.38	0.46	0.54	0.70	0.91	1.15	1.40	1.64	2.10	
75	0.05	0.08	0.14	0.25	0.36	0.47	0.58	0.69	0.91	1.20	1.54	1.87	2.21	2.86	
100	0.05	0.09	0.15	0.28	0.41	0.55	0.68	0.82	1.10	1.46	1.88	2.31	2.73	3.57	
150	0.05	0.09	0.17	0.33	0.50	0.68	0.86	1.05	1.43	1.92	2.51	3.09	3.68	4.85	
200	0.06	0.10	0.18	0.37	0.57	0.79	1.02	1.25	1.72	2.34	3.07	3.81	4.56	6.04	
250	0.06	0.10	0.19	0.40	0.64	0.89	1.16	1.43	1.99	2.72	3.60	4.48	5.37	7.16	
300	0.06	0.10	0.20	0.43	0.69	0.98	1.28	1.60	2.24	3.09	4.09	5.11	6.15	8.23	1
400	0.06	0.11	0.22	0.48	0.80	1.14	1.51	1.90	2.70	3.75	5.01	6.30	7.60	10.24	1
600	0.06	0.12	0.24	0.56	0.96	1.42	1.91	2.43	3.52	4.95	6.67	8.45	10.26	13.94	1
800	0.06	0.12	0.26	0.63	1.10	1.65	2.25	2.89	4.24	6.03	8.17	10.40	12.69	17.35	2
1000	0.06	0.13	0.27	0.69	1.23	1.86	2.55	3.30	4.91	7.02	9.57	12.23	14.96	20.57	2

LS Factors for Construction Sites. *Table from Renard et. al., 1997.*

APPENDIX 2:
Post-Construction Water Balance Performance Standard Spreadsheet

The discharger shall submit with their Notice of Intent (NOI) the following information to demonstrate compliance with the New and Re-Development Water Balance Performance Standard.

Map Instructions

The discharger must submit a small-scale topographic map of the site to show the existing contour elevations, pre- and post-construction drainage divides, and the total length of stream in each watershed area. Recommended scales include 1 in. = 20 ft., 1 in. = 30 ft., 1 in. = 40 ft., or 1 in = 50 ft. The suggested contour interval is usually 1 to 5 feet, depending upon the slope of the terrain. The contour interval may be increased on steep slopes. Other contour intervals and scales may be appropriate given the magnitude of land disturbance.

Spreadsheet Instructions

The intent of the spreadsheet is to help dischargers calculate the project-related increase in runoff volume and select impervious area and runoff reduction credits to reduce the project-related increase in runoff volume to pre-project levels.

The discharger has the option of using the spreadsheet (**Appendix 2.1)** or a more sophisticated, watershed process-based model (e.g. Storm Water Management Model, Hydrological Simulation Program Fortran) to determine the project-related increase in runoff volume.

In* Appendix 4.1**, ***you must complete the worksheet for each land use/soil type combination for each project sub-watershed.

Steps 1 through 9 pertain specifically to the Runoff Volume Calculator:

Step 1: Enter the county where the project is located in cell H3.

Step 2: Enter the soil type in cell H6.

Step 3: Enter the existing pervious (dominant) land use type in cell H7.

Step 4: Enter the proposed pervious (dominant) land use type in cell H8.

Step 5: Enter the total project site area in cell H11 or J11.

Step 6: Enter the sub-watershed area in cell H12 or J12.

Step 7: Enter the existing rooftop area in cell H17 or J17, the existing non-rooftop impervious area in cell H18 or J18, the proposed rooftop area in cell H19 or J19, and the proposed non-rooftop impervious area in cell H20 or J20

Step 8: Work through each of the impervious area reduction credits and claim credits where applicable. Volume that cannot be addressed using non-structural practices must be captured in structural practices and approved by the Regional Water Board.

Step 9: Work through each of the impervious volume reduction credits and claim credits where applicable. Volume that cannot be addressed using non-structural practices must be captured in structural practices and approved by the Regional Water Board.

Non-structural Practices Available for Crediting

- ***Porous Pavement***
- ***Tree Planting***
- ***Downspout Disconnection***
- ***Impervious Area Disconnection***
- ***Green Roof***
- ***Stream Buffer***
- ***Vegetated Swales***
- ***Rain Barrels and Cisterns***
- ***Landscaping Soil Quality***

Post-Construction Water Balance Calculator

3	User may make changes from any cell that is orange or brown in color (similar to the cells to the immediate right). Cells in green are calculated for you.		(Step 1a) If you know the 85th percentile storm event for your location enter it in the box below	(Step 1b) If you can not answer 1a then select the county where the project is located (click on the cell to the right for drop-down): This will determine the average 85th percentile 24 hr. storm event for your site, which will appear under precipitation to left.	***SACRAMENTO***
4				(Step 1c) If you would like a more percise value select the location closest to your site. If you do not recgonize any of these locations, leave this drop-down menu at location. The average value for the County will be used.	**SACRAMENTO FAA ARPT**
5	***Project Information***			***Runoff Calculations***	
6	***Project Name:***	***Optional***		(Step 2) Indicate the Soil Type (dropdown menu to right):	***Group C Soils*** / **Low infiltration. Sandy clay loam. Infiltration rate 0.05 to 0.15 inch/hr when wet.**
7	***Waste Discharge Identification (WDID):***	***Optional***		(Step 3) Indicate the existing **dominant** non-built land Use Type (dropdown menu to right):	***Wood & Grass: <50% ground cover***
8	***Date:***	***Optional***		(Step 4) Indicate the proposed **dominant** non-built land Use Type (dropdown menu to right):	***Lawn, Grass, or Pasture covering more than 75% of the open space***
9	***Sub Drainage Area Name (from map):***	***Optional***			**Complete Either**
10	***Runoff Curve Numbers***				**Sq Ft** / **Acres** / **Acres**
11	**Existing Pervious Runoff Curve Number**		**82**	*(Step 5) Total Project Site Area:*	**5.00** / **5.00**
12	**Proposed Development Pervious Runoff Curve Number**		**74**	*(Step 6) Sub-watershed Area:*	**5.00** / **5.00**
13	***Design Storm***			*Percent of total project :*	**100%**
14	Based on the County you indicated above, we have included the 85 percentile average 24 hr event - P85 (in)^ for your area.	**0.62**	**in**		
15	The Amount of rainfall needed for runoff to occur (Existing runoff curve number -P from existing RCN (in)^)	**0.44**	**In**	***(Step 7) Sub-watershed Conditions***	**Complete Either** / **Calculated Acres**
16	P used for calculations (in) (the greater of the above two criteria)	**0.62**	**In**	Sub-watershed Area (acres)	**Sq Ft** / **Acres** / **5.00**
17	^Available at www.cabmphandbooks.com			Existing Rooftop Impervious Coverage	**0** / **0.00**
18				Existing Non-Rooftop Impervious Coverage	**0** / **0.00**
19				Proposed Rooftop Impervious Coverage	**0** / **0.00**
20				Proposed Non-Rooftop Impervious Coverage	**0** / **0.00**
21					
22				***Credits***	**Acres** / **Square Feet**
23				Porous Pavement	**0.00** / **0**
24				Tree Planting	**0.00** / **0**
25	**Pre-Project Runoff Volume (cu ft)**	**247**	**Cu.Ft.**	Downspout Disconnection	**0.00** / **0**
26	**Project-Related Runoff Volume Increase w/o credits (cu ft)**	**0**	**Cu.Ft.**	Impervious Area Disconnection	**0.00** / **0**
27				Green Roof	**0.00** / **0**
28				Stream Buffer	**0.00** / **0**
29				Vegetated Swales	**0.00** / **0**
30	**Project-Related Volume Increase with Credits (cu ft)**	**0**	**Cu.Ft.**	**Subtotal**	**0.00** / **0**
31				**Subtotal Runoff Volume Reduction Credit**	**0 Cu. Ft.**
32	You have achieved your minimum requirements				
33				***(Step 9) Impervious Volume Reduction Credits***	**Volume (cubic feet)**
34				Rain Barrels/Cisterns	**0 Cu. Ft.**
35				Soil Quality	**0 Cu. Ft.**
36				**Subtotal Runoff Volume Reduction**	**0 Cu. Ft.**
37				**Total Runoff Volume Reduction Credit**	**0 Cu. Ft.**
38					
39					

Porous Pavement Credit Worksheet

Please fill out a porous pavement credit worksheet for each project sub-watershed.

For the PROPOSED Development:

Proposed Porous Pavement	Runoff Reduction*	Fill in either Acres or SqFt In SqFt.	In Acres	Equivalent Acres
Area of **Brick without Grout** on less than 12 inches of base with at least 20% void space over soil	0.45			0.00
Area of **Brick without Grout** on more than 12 inches of base with at least 20% void space over soil	0.90			0.00
Area of **Cobbles** less than 12 inches deep and over soil	0.30			0.00
Area of **Cobbles** less than 12 inches deep and over soil	0.60			0.00
Area of **Reinforced Grass Pavement** on less than 12 inches of base with at least 20% void space over soil	0.45			0.00
Area of **Reinforced Grass Pavement** on at least 12 inches of base with at least 20% void space over soil	0.90			0.00
Area of **Porous Gravel Pavement** on less than 12 inches of base with at least 20% void space over soil	0.38			0.00
Area of **Porous Gravel Pavement** on at least 12 inches of base with at least 20% void space over soil	0.75			0.00
Area of **Poured Porous Concrete or Asphalt Pavement** with less than 4 inches of gravel base (washed stone)	0.40			0.00
Area of **Poured Porous Concrete or Asphalt Pavement** with 4 to 8 inches of gravel base (washed stone)	0.60			0.00
Area of **Poured Porous Concrete or Asphalt Pavement** with 8 to 12 inches of gravel base (washed stone)	0.80			0.00
Area of **Poured Porous Concrete or Asphalt Pavement** with 12 or more inches of gravel base (washed stone)	1.00			0.00

*=1-Rv**

Return to Calculator

**Using Site Design Techniques to meet Development Standards for Stormwater Quality (BASMAA 2003)

**NCDENR Stormwater BMP Manual (2007)

Tree Planting Credit Worksheet

Please fill out a tree canopy credit worksheet for each project sub-watershed.

Tree Canopy Credit Criteria	Number of Trees Planted	Credit (acres)
Number of proposed evergreen trees to be planted (credit = number of trees x 0.005)*	0	0.00
Number of proposed deciduous trees to be planted (credit = number of trees x 0.0025)*		0.00
	Square feet Under Canopy	
Square feet under an existing tree canopy, that will remain on the property, with an average diameter at 4.5 ft above grade (i.e., diameter at breast height or DBH) is LESS than 12 in diameter.		0.00
Square feet under an existing tree canopy that will remain on the property, with an average diameter at 4.5 ft above grade (i.e., diameter at breast height or DBH) is 12 in diameter or GREATER.		0.00
Please describe below how the project will ensure that these trees will be maintained.		

0

Return to Calculator

* credit amount based on credits from Stormwater Quality Design Manual for the Sacramento and South Placer Regions

Downspout Disconnection Credit Worksheet

Please fill out a downspout disconnection credit worksheet for each project subwatershed. If you answer yes to all questions, all rooftop area draining to each downspout will be subtracted from your proposed rooftop impervious coverage.

Downspout Disconnection Credit Criteria					
Do downspouts and any extensions extend at least six feet from a basement and two feet from a crawl space or concrete slab?				○ Yes	◉ No
Is the area of rooftop connecting to each disconnected downspout 600 square feet or less?				○ Yes	◉ No
Is the roof runoff from the design storm event fully contained in a raised bed or planter box or does it drain as sheet flow to a landscaped area large enough to contain the roof runoff from the design storm event?				○ Yes	◉ No
The Stream Buffer and/or Vegetated Swale credits **will not** be taken in this sub-watershed area?				○ Yes	◉ No
Percentage of existing	0.00	Acres	of rooftop surface has disconnected downspouts		
Percentage of the proposed	0.00	Acres	of rooftop surface has disconnected downspouts	50	
				Return to Calculator	

Impervious Area Disconnection Credit Worksheet

Please fill out an impervious area disconnection credit worksheet for each project sub-watershed. If you answer yes to all questions, all non-rooftop impervious surface area will be subtracted from your proposed non-rooftop impervious coverage.

Non-Rooftop Disconnection Credit Criteria	Response
Is the maximum contributing impervious flow path length less than 75 feet or, if equal or greater than 75 feet, is a storage device (e.g. French drain, bioretention area, gravel trench) implemented to achieve the required disconnection length?	◉ Yes ○ No
Is the impervious area to any one discharge location less than 5,000 square feet?	◉ Yes ○ No
The Stream Buffer credit **will not** be taken in this sub-watershed area?	◉ Yes ○ No

Percentage of existing	0.00	Acres non-rooftop surface area disconnected	
Percentage of the proposed	0.00	Acres non-rooftop surface area disconnected	70

Return to Calculator

Green Roof Credit Worksheet

Please fill out a greenroof credit worksheet for each project sub-watershed. If you answer yes to all questions, 70% of the greenroof area will be subtracted from your proposed rooftop impervious coverage.

Green Roof Credit Criteria	Response
Is the roof slope less than 15% or does it have a grid to hold the substrate in place until it forms a thick vegetation mat?	◉ Yes ○ No
Has a professional engineer assessed the necessary load reserves and designed a roof structure to meet state and local codes?	◉ Yes ○ No
Is the irrigation needed for plant establishment and/or to sustain the green roof during extended dry periods, is the source from stored, recycled, reclaimed, or reused water?	◉ Yes ○ No
Percentage of existing 0.00 Acres rooftop surface area in greenroof	
Percentage of the proposed 0.00 Acres rooftop surface area in greenroof	

Return to Calculator

Stream Buffer Credit Worksheet

Please fill out a stream buffer credit worksheet for each project sub-watershed. If you answer yes to all questions, you may subtract all impervious surface draining to each stream buffer that has not been addressed using the Downspout and/or Impervious Area Disconnection credits.

Stream Buffer Credit Criteria				Response
Does runoff enter the floodprone width* or within 500 feet (whichever is larger) of a stream channel as sheet flow**?				○ Yes ◉ No
Is the contributing overland slope 5% or less, or if greater than 5%, is a level spreader used?				○ Yes ◉ No
Is the buffer area protected from vehicle or other traffic barriers to reduce compaction?				○ Yes ◉ No
Will the stream buffer be maintained in an ungraded and uncompacted condition and will the vegetation be maintained in a natural condition?				○ Yes ◉ No
Percentage of existing	0.00	Acres	impervious surface area draining into a stream buffer:	
Percentage of the proposed	0.00	Acres	impervious surface area that will drain into a stream buffer:	
Please describe below how the project will ensure that the buffer areas will remain in ungraded and uncompacted condition and that the vegetation will be maintained in a natural condition.				

Return to Calculator

* floodprone width is the width at twice the bankfull depth.
** the maximum contributing length shall be 75 feet for impervious area

Vegetated Swale Credit Worksheet

Please fill out a vegetated swale worksheet for each project subwatershed. If you answer yes to all questions, you may subtract all impervious surface draining to each stream buffer that has not been addressed using the Downspout Disconnection credit.

Vegetated Swale Credit Criteria

Have all vegetated swales been designed in accordance with Treatment Control BMP 30 (TC-30 - Vegetated Swale) from the California Stormwater BMP Handbook, New Development and Redevelopment (available at www.cabmphandbooks.com)?	○ Yes ◉ No
Is the maximum flow velocity for runoff from the design storm event less than or equal to 1.0 foot per second?	○ Yes ◉ No

Percentage of existing	0.00	Acres of impervious area draining to a vegetated swale	
Percentage of the proposed	0.00	Acres of impervious area draining to a vegetated swale	

Return to Calculator

Rain Barrel/Cistern Credit Worksheet

Please fill out a rain barrel/cistern worksheet for each project sub-watershed.

Rain Barrel/Cistern Credit Criteria	Response
Total number of rain barrel(s)/cisterns	
Average capacity of rain barrel(s)/cistern(s) (in gallons)	
Total capacity rain barrel(s)/cistern(s) (in cu ft) [1]	0

[1] accounts for 10% loss

Return to Calculator

Please fill out a soil quality worksheet for each project sub-watershed.

	Response
Will the landscaped area be lined with an impervious membrane?	
Will the soils used for landscaping meet the ideal bulk densities listed in Table 1 below? [1]	○ Yes ◉ No
If you answered yes to the question above, and you know the area-weighted bulk density within the top 12 inches for soils used for landscaping (in g/cm^3)* , fill in the cell to the right and skip to cell G11. If not select from the drop-down menu in G10.	1.3
If you answered yes to the question above, but you do not know the exact bulk density, which of the soil types in the drop down menu to the right best describes the top 12 inches for soils used for landscaping (in g/cm^3).	Sandy loams, loams
What is the average depth of your landscaped soil media meeting the above criteria (inches)?	12
What is the total area of the landscaped areas meeting the above criteria (in acres)?	2.97

Return to Calculator

Table 1

Sands, loamy sands	<1.6
Sandy loams, loams	<1.4
Sandy clay loams, loams, clay loams	<1.4
Silts, silt loams	<1.3
Silt loams, silty clay loams	<1.1
Sandy clays, silty clays, some clay loams (35-45% clay)	<1.1
Clays (>45% clay)	<1.1

Porosity (%) 50.94%

Mineral grains in many soils are mainly quartz and feldspar, so 2.65 a good average for particle density. To determine percent porosity, use the formula: Porosity (%) = (1-Bulk Density/2.65) X 100

[1] USDA NRCS. "Soil Quality Urban Technical Note No.2-Urban Soil Compaction". March 2000. http://soils.usda.gov/sqi/management/files/sq_utn_2.pdf

* To determine how to calculate density see: http://www.globe.gov/tctg/bulkden.pdf?sectionID=94

APPENDIX 3
Bioassessment Monitoring Guidelines

Bioassessment monitoring is required for projects that meet all of the following criteria:

1. The project is rated Risk Level 3 or LUP Type 3
2. The project directly discharges runoff to a freshwater wadeable stream (or streams) that is either: (a) listed by the State Water Board or USEPA as impaired due to sediment, and/or (b) tributary to any downstream water body that is listed for sediment; and/or have the beneficial use SPAWN & COLD & MIGRATORY
3. Total project-related ground disturbance exceeds 30 acres.

For all such projects, the discharger shall conduct bioassessment monitoring, as described in this section, to assess the effect of the project on the biological integrity of receiving waters.
Bioassessment shall include:

1. The collection and reporting of specified instream biological data
2. The collection and reporting of specified instream physical habitat data

<u>Bioassessment Exception</u>
If a site qualifies for bioassessment, but construction commences out of an index period for the site location, the discharger shall:

1. Receive Regional Water Board approval for the sampling exception
2. Make a check payable to: Cal State Chico Foundation (SWAMP Bank Account) or San Jose State Foundation (SWAMP Bank Account) and include the WDID# on the check for the amount calculated for the exempted project.
3. Send a copy of the check to the Regional Water Board office for the site's region
4. Invest **7,500.00 X The number of samples required** into the SWAMP program as compensation (upon Regional Water Board approval).
5. Conduct bioassessment monitoring, as described in Appendix 4
6. Include the collection and reporting of specified instream biological data and physical habitat
7. Use the bioassessment sample collection and Quality Assurance & Quality Control (QA/QC) protocols developed by the State of California's Surface Water Ambient Monitoring Program (SWAMP)

<u>Site Locations and Frequency</u>
Macroinvertebrate samples shall be collected both before ground disturbance is initiated and after the project is completed. The "after" sample(s) shall be collected after at least one winter season resulting in surface runoff has transpired after project-related ground disturbance has ceased. "Before" and "after" samples shall be collected both upstream and downstream of the project's

discharge. Upstream samples should be taken immediately before the sites outfall and downstream samples should be taken immediately after the outfall (when safe to collect the samples). Samples should be collected for each freshwater wadeable stream that is listed as impaired due to sediment, or tributary to a water body that is listed for sediment. Habitat assessment data shall be collected concurrently with all required macroinvertebrate samples.

Index Period (Timing of Sample Collection)
Macroinvertebrate sampling shall be conducted during the time of year (i.e., the "index period") most appropriate for bioassessment sampling, depending on ecoregion. This map is posted on the State Water Board's Website: http://www.waterboards.ca.gov/water_issues/programs/stormwater/construction.shtml

Field Methods for Macroinvertebrate Collections
In collecting macroinvertebrate samples, the discharger shall use the "Reachwide Benthos (Multi-habitat) Procedure" specified in *Standard Operating Procedures for Collecting Benthic Macroinvertebrate Samples and Associated Physical and Chemical Data for Ambient Bioassessments in California* (Ode 2007).[1]

Physical - Habitat Assessment Methods
The discharger shall conduct, concurrently with all required macroinvertebrate collections, the "Full" suite of physical habitat characterization measurements as specified in *Standard Operating Procedures for Collecting Benthic Macroinvertebrate Samples and Associated Physical and Chemical Data for Ambient Bioassessments in California* (Ode 2007), and as summarized in the Surface Water Ambient Monitoring Program's *Stream Habitat Characterization Form — Full Version*.

Laboratory Methods
Macroinvertebrates shall be identified and classified according to the Standard Taxonomic Effort (STE) Level I of the Southwestern Association of Freshwater Invertebrate Taxonomists (SAFIT),[2] and using a fixed-count of 600 organisms per sample.

Quality Assurance
The discharger or its consultant(s) shall have and follow a quality assurance (QA) plan that covers the required bioassessment monitoring. The QA plan shall include, or be supplemented to include, a specific requirement for external QA checks (i.e., verification of taxonomic identifications and correction of data where

---

[1] This document is available on the Internet at: ~~http://www.swrcb.ca.gov/swamp/docs/phab_sopr6.pdf~~. http://swamp.mpsl.mlml.calstate.edu/wp-content/uploads/2009/04/swamp_sop_bioassessment_collection_020107.pdf.

[2] The current SAFIT STEs (28 November 2006) list requirements for both the Level I and Level II taxonomic effort, and are located at: ~~http://www.swrcb.ca.gov/swamp/docs/safit/ste_list.pdf~~ http://www.safit.org/Docs/ste_list.pdf. When new editions are published by SAFIT, they will supersede all previous editions. All editions will be posted at the State Water Board's SWAMP website.

errors are identified). External QA checks shall be performed on one of the discharger's macroinvertebrate samples collected per calendar year, or ten percent of the samples per year (whichever is greater). QA samples shall be randomly selected. The external QA checks shall be paid for by the discharger, and performed by the California Department of Fish and Game's Aquatic Bioassessment Laboratory. An alternate laboratory with equivalent or better expertise and performance may be used if approved in writing by State Water Board staff.

Sample Preservation and Archiving

The original sample material shall be stored in 70 percent ethanol and retained by the discharger until: 1) all QA analyses specified herein and in the relevant QA plan are completed; and 2) any data corrections and/or re-analyses recommended by the external QA laboratory have been implemented. The remaining subsampled material shall be stored in 70 percent ethanol and retained until completeness checks have been performed according to the relevant QA plan. The identified organisms shall be stored in 70 percent ethanol, in separate glass vials for each final ID taxon. (For example, a sample with 45 identified taxa would be archived in a minimum of 45 vials, each containing all individuals of the identified taxon.) Each of the vials containing identified organisms shall be labeled with taxonomic information (i.e., taxon name, organism count) and collection information (i.e., site name/site code, waterbody name, date collected, method of collection). The identified organisms shall be archived (i.e., retained) by the discharger for a period of not less than three years from the date that all QA steps are completed, and shall be checked at least once per year and "topped off" with ethanol to prevent desiccation. The identified organisms shall be relinquished to the State Water Board upon request by any State Water Board staff.

Data Submittal

The macroinvertebrate results (i.e., taxonomic identifications consistent with the specified SAFIT STEs, and number of organisms within each taxa) shall be submitted to the State Water Board in electronic format. The State Water Board's Surface Water Ambient Monitoring Program (SWAMP) is currently developing standardized formats for reporting bioassessment data. All bioassessment data collected after those formats become available shall be submitted using the SWAMP formats. Until those formats are available, the biological data shall be submitted in MS-Excel (or equivalent) format.[3]

The physical/habitat data shall be reported using the standard format titled *SWAMP Stream Habitat Characterization Form — Full Version*.[4]

[3] Any version of Excel, 2000 or later, may be used.
[4] Available at: http://www.waterboards.ca.gov/water_issues/programs/swamp/docs/reports/fieldforms_fullversion052908.pdf

Invasive Species Prevention

In conducting the required bioassessment monitoring, the discharger and its consultants shall take precautions to prevent the introduction or spread of aquatic invasive species. At minimum, the discharger and its consultants shall follow the recommendations of the California Department of Fish and Game to minimize the introduction or spread of the New Zealand mudsnail.[5]

[5] Instructions for controlling the spread of NZ mudsnails, including decontamination methods, can be found at: http://www.dfg.ca.gov/invasives/mudsnail/
More information on AIS More information on AIS
http://www.waterboards.ca.gov/water_issues/programs/swamp/ais/

Appendix 4 Sediment TMDLs

Implemented Sediment TMDLs in California. Construction was listed as a source in all fo these TMDLs in relation to road construction. Although construction was mentioned as a source, it was not given a specific allocation amount. The closest allocation amount would be for the road activity management WLA. **Implementation Phase** – Adoption process by the Regional Board, the State Water Resources Control Board, the Office of Administrative Law, and the US Environmental Protection Agency completed and TMDL being implemented.

A. Region	**Type**	**Name**	**Pollutant Stressor**	**Potential Sources**	**TMDL Completion Date**	**Watershed Acres**	**WLA** tons mi^2 yr
1 R1.epa.albionfinaltmdl	R	Albion River	Sedimentation	Road Construction	2001	43 acres	See A (table 6)

B Region	**Type**	**Name**	**Pollutant Stressor**	**Potential Sources**	**TMDL Completion Date**	**Watershed Acres**	**WLA** tons mi^2 yr
1 R1.epa.EelR-middle.mainSed.temp	R	Middle Main Eel River and Tributaries (from Dos Rios to the South Fork)	Sedimentation Road	Construction	2005-2006 521	mi^2	100

C Region	**Type**	**Name**	**Pollutant Stressor**	**Potential Sources**	**TMDL Completion Date**	**Watershed Acres**	**WLA** tons mi^2 yr
1 R1.epa.EelRsouth.sed.temp	R	South Fork Eel River	Sedimentation	Road Construction	12 1999	See chart	473

D Region	**Type**	**Name**	**Pollutant Stressor**	**Potential Sources**	**TMDL Completion Date**	**Watershed Acres**	**WLA** tons mi^2 yr
1 R1.epa.bigfinaltmdl	R Big	River	Sedimentation	Road Construction	12 2001	181 mi^2 watershed drainage	TMDL = loading capacity = nonpoint sources + background =

							393 t mi2 yr

E Region	Type	Name	Pollutant Stressor	Potential Sources	TMDL Completion Date	Watershed Acres	WLA tons mi^2 yr
1 R1.epa.EelR-lower.Sed.temp-121807-signed	R	Lower Eel River	Sedimentation	Road Construction	12 2007	300 square-mile watershed	898

F Region	Type	Name	Pollutant Stressor	Potential Sources	TMDL Completion Date	Watershed Acres	WLA tons mi^2 yr
1 R1.epa.EelR-middle.Sed.temp-	R	Middle Fork Eel River	Sedimentation	Road Construction	12 2003	753 mi^2 (approx. 482,000 acres)	82

G Region	Type	Name	Pollutant Stressor	Potential Sources	TMDL Completion Date	Watershed Acres Mi^2	WLA tons mi^2 yr
1 R1.epa.EelRnorth-Sed.temp.final-121807-signed	R	North Fork Eel River	Sedimentation	Road Construction	12 30 2002	289 (180,020 acres)	20

H Region	Type	Name	Pollutant Stressor	Potential Sources	TMDL Completion Date	Watershed Acres Mi^2	WLA tons mi^2 yr
1 R1.epa.EelR-upper.mainSed.temp-	R	Upper Main Eel River and Tributaries (including Tomki Creek, Outlet Creek and Lake Pillsbury)	Sedimentation	Road Construction	12 29 2004	688 (approx. 440,384 acres)	14

I Region	Type	Name	Pollutant Stressor	Potential Sources	TMDL Completion Date	Watershed Acres	WLA tons mi^2 yr
1 R1.epa.gualalafinaltmdl	R	Gualala River	Sedimentation	Road Construction	Not sure	300 (191,145 acres)	7

J Region	Type	Name	Pollutant Stressor	Potential Sources	TMDL Completion Date	Watershed Acres mi^2	WLA tons mi^2 yr
1 R1.epa.Mad-sed.turbidity	R	Mad River	Sedimentation	Road Construction	12 21 2007	480	174

K Region	Type	Name	Pollutant Stressor	Potential Sources	TMDL Completion Date	Watershed Acres mi^2	WLA tons mi^2 yr
1 R1.epa.mattole.sediment	R	Mattole River	Sedimentation	Road Construction	12 30 2003	296	27 or 520+27 = 547

L Region	Type	Name	Pollutant Stressor	Potential Sources	TMDL Completion Date	Watershed Acres mi^2	WLA tons mi^2 yr
1 R1.epa.navarro.sed.temp	R	Navarro River	Sedimentation	Road Construction	Not sure	315 (201,600 acres).	50

M Region	Type	Name	Pollutant Stressor	Potential Sources	TMDL Completion Date	Watershed Acres mi^2	WLA tons mi^2 yr
1 R1.epa.noyo.sediment	R	Noyo River	Sedimentation	Road Construction	12 16 1999	113 (72,323 acres)	68 (three areas measured) Table 16 in the TMDL

N Region	Type	Name	Pollutant Stressor	Potential Sources	TMDL Completion Date	Watershed Acres mi^2	WLA tons mi^2 yr
1 R1.epa.RedwoodCk.sed	Cr	Redwood Creek	Sedimentation	Road Construction	12 30 1998	278	1900 Total allocation

O Region	Type	Name	Pollutant Stressor	Potential Sources	TMDL Completion Date	Watershed Acres mi^2	WLA – Roads tons mi^2 yr
1 R1.epa.tenmile.sed	R	Ten Mile River	Sedimentation	Road Construction	2000	120	9

P Region	Type	Name	Pollutant Stressor	Potential Sources	TMDL Completion Date	Watershed Acres mi^2	WLA management tons mi^2 yr
1 R1.epa.trinity.sed	R	Trinity River	Sedimentation	Road Construction	12 20 2001	2000 of 3000 covered in this TMDL	See rows below
1	Cr	Horse Linto Creek	Sedimentation	Road Construction	12 20 2001	64	528
1	Cr	Mill creek and Tish Tang	Sedimentation	Road Construction	12 20 2001	39	210
1	Cr	Willow Creek	Sedimentation	Road Construction	12 20 2001	43	94
1	Cr	Campbell Creek and Supply Creek	Sedimentation	Road Construction	12 20 2001	11	1961
1	Cr	Lower Mainstem and Coon Creek	Sedimentation	Road Construction	12 20 2001	32	63
1 R		Reference Subwatershed [1]	Sedimentation	Road Construction	12 20 2001	434	24
1	Cr	Canyon Creek	Sedimentation	Road	12 20 2001	64	326

				Construction			
1 R		Upper Tributaries[2]	Sedimentation	Road Construction	12 20 2001	72	67
1 R		Middle Tributaries[3]	Sedimentation	Road Construction	12 20 2001	54	53
1 R		Lower Tributaries[4]	Sedimentation	Road Construction	12 20 2001	96	55
1	Cr	Weaver and Rush Creeks	Sedimentation	Road Construction	12 20 2001	72	169
1 Cr		Deadwood Creek Hoadley Gulch Poker Bar	Sedimentation	Road Construction	12 20 2001	47	68
1	L	Lewiston Lake	Sedimentation	Road Construction	12 20 2001	25	49
1 Cr		Grassvalley Creek	Sedimentation	Road Construction	12 20 2001	37	44
1	Cr	Indian Creek	Sedimentation	Road Construction	12 20 2001	34	81
1	Cr	Reading and Browns Creek	Sedimentation	Road Construction	12 20 2001	104	66
1 Cr		Reference Subwatersheds[5]	Sedimentation	Road Construction	12 20 2001	235	281
1	L, Cr	Westside tributaries[6]	Sedimentation	Road Construction	12 20 2001	93	105
1 R,	Cr, G	Upper trinity[7]	Sedimentation	Road Construction	12 20 2001	161	690
1 R,	Cr, G	East Fork Tributaries[8]	Sedimentation	Road Construction	12 20 2001	115	65
1	R, L	Eastside Tributaries[9]	Sedimentation	Road Construction	12 20 2001	89	60

1 New River, Big French, Manzanita, North Fork, East Fork, North Fork
2 Dutch, Soldier, Oregon gulch, Conner Creek
3 Big Bar, Prairie Creek, Little French Creek
4 Swede, Italian, Canadian, Cedar Flat, Mill, McDonald, Hennessy, Quimby, Hawkins, Sharber
5 Stuarts Fork, Swift Creek, Coffee Creek
6 Stuart Arm, Stoney Creek, Mule Creek, East Fork, Stuart Fork, West Side Trinity Lake, Hatchet Creek, Buckeye Creek,
7 Upper Trinity River, Tangle Blue, Sunflower, Graves, Bear Upper Trinity Mainstream, Ramshorn Creek, Ripple Creek, Minnehaha Creek, Snowslide Gulch, Scorpion Creek
8 East Fork Trinity, Cedar Creek, Squirrel Gulch

9 East Side Tributaries, Trinity Lake

Q Region	**Type**	**Name**	**Pollutant Stressor**	**Potential Sources**	**TMDL Completion Date**	**Watershed Acres** mi^2	**WLA** tons mi^2 yr
1 R1.epa.trinity.so.sed	R, Cr	South Fork Trinity River and Hayfork Creek	Sedimentation	Road Construction	12 1998	Not given, 19 miles long	33 (road total)

R Region	**Type**	**Name**	**Pollutant Stressor**	**Potential Sources**	**TMDL Completion Date**	**Watershed Acres** mi^2	**WLA** tons mi^2 yr
1 R1.epa.vanduzen.sed	R, Cr	Van Duzen River and Yager Creek	Sedimentation	Various	12 16 1999	429	1353 total allocation
1		Upper Basin	Sedimentation	Road Construction			7
1		Middle Basin	Sedimentation	Road Construction			22
1		Lower Basin	Sedimentation	Road Construction			20

S Region	**Type**	**Name**	**Pollutant Stressor**	**Potential Sources**	**TMDL Completion Date**	**Watershed Acres** mi^2	**WLA** tons mi^2 yr
6 R6.blackwood.sed Cr		Blackwood Creek (Placer County)	Bedded Sediment	Various	9 2007	11	17272 total

T Region	**Type**	**Name**	**Pollutant Stressor**	**Potential Sources**	**TMDL Completion Date**	**Watershed Acres** mi^2	**WLA** tons mi^2 yr
6 R6.SquawCk.sed R		Squaw Creek (Placer County)	Sedimentation /controllable sources	Various – basin plan amendment	4 13 2006	8.2	10,900

Adopted TMDLs for Construction Sediment Sources

Region	Type	Name	Pollutant Stressor	Potential Sources	**TMDL Completion Date**	**Watershed Area** mi^2	Waste load Allocation tons mi^2 yr
8 R		Newport Bay San Diego Creek Watershed	Sedimentation	Construction Land Development	1999 2.24	(1432 acres)	125,000 tons per Year (no more than 13,000 tons per year from construction sites)

Appendix 4 Non Sediment TMDLs

Region 1 Lost River-DIN and CBOD

Region 1 Source: Cal Trans Construction TMDL Completion Date: 12 30 2008 TMDL Type: River, Lake Watershed Area= 2996 mi^2	**Pollutant Stressors/WLA**	
	Dissolved inorganic nitrogen (DIN) (metric tons/yr)	**Carbonaceous biochemical oxygen demand (CBOD) (metric tons/yr)**
Lost River from the Oregon border to Tule Lake	.1 .2	
Tule Lake Refuge	.1	.2
Lower Klamath Refuge	.1	.2

Region 2 San Francisco Bay-Mercury

Region 2 Source:Non-Urban Stormwater Runoff TMDL Type: Bay	**Name**	**Pollutant Stressor/WLA**	**TMDL Completion Date**
	San Francisco Bay	Mercury 25 kg/year	08 09 2006

Region 4 Machado Lake Nutrients - Resolution No. 2008-006
(Effective Date - March 11, 2009)

General Construction Stormwater Permit WLAs	Years After Effective Date	Total Phosphorus (mg/L)	Total Nitrogen (TKN + NO3-N + NO2-N) (mg/L)
Interim WLAs[1]	At Effective Date	1.25	3.50
Interim WLAs[2] 5	years	1.25	2.45
Final WLAs[2]	9.5 years	0.10	1.00

[1] The compliance points for effective date interim WLAs are measured in the lake.
[2] No compliance points are specified for general construction stormwater permits for the year 5 interim WLAs and final WLAs

Region 4 Ballona Creek-Metals and Selenium – Resolution No. 2007-015
(Effective Date October 29, 2008)

Wet Weather WLAs

Region 4 Source: NPDES General Construction TMDL Completion Date: 10 29 2008 TMDL Type: Creek								
	Copper (Cu)		**Lead (Pb)**		**Selenium (Se)**		**Zinc (Zn)**	
	g/day	g/day/acre	g/day	g/day/acre	g/day	g/day/acre	g/day	g/day/acre
Ballona Creek	4.94E-07 x Daily storm volume (L)	2.20E-10 x Daily storm volume (L)	1.62E-06 x Daily storm volume (L)	7.20E-10 x Daily storm volume (L)	1.37E-07 x Daily storm volume (L)	6.10E-11 x Daily storm volume (L)	3.27E-06 x Daily storm volume (L)	1.45E-09 x Daily storm volume (L)

Wet-weather WLA Implementation

- Within seven years of the effective date of the TMDL, the construction industry will submit the results of BMP effectiveness studies to determine BMPs that will achieve compliance with the final waste load allocations assigned to construction storm water permittees.
- Regional Board staff will bring the recommended BMPs before the Regional Board for consideration within eight years of the effective date of the TMDL.
- General construction storm water permittees will be considered in compliance with final waste load allocations if they implement these Regional Board approved BMPs. All permittees must implement the approved BMPs within nine years of the effective date of the TMDL. If no effectiveness studies are conducted and no BMPs are approved by the Regional Board within eight years of the effective date of the TMDL, each general construction storm water permit holder will be subject to site-specific BMPs and monitoring requirements to demonstrate compliance with final waste load allocations.

Dry-weather WLAs

A waste load allocation of zero is assigned to all general construction storm water permits during dry weather.

Dry-weather WLA Implementation

Non-storm water flows authorized by the General Permit for Storm Water Discharges Associated with Construction Activity (Water Quality Order No. 99-08 DWQ), or any successor order, are exempt from the dry-weather waste load allocation equal to zero as long as they comply with the provisions of sections C.3 and A.9 of the Order No. 99-08 DWQ, which state that these authorized non-storm discharges shall be:

(1) infeasible to eliminate
(2) comply with BMPs as described in the Storm Water Pollution Prevention Plan prepared by the permittee, and
(3) not cause or contribute to a violation of water quality standards, or comparable provisions in any successor order.

Unauthorized non-storm water flows are already prohibited by Order No. 99-08 DWQ.

Region 4 Los Angeles River and Tributaries-Metals– Resolution No. 2007-014
(Effective Date October 29, 2008)

Wet Weather WLAs

	Cadmium (Cd)		**Copper (Cu)**		**Lead (Pb)**		**Zinc (Zn)**	
	kg/day g/day/acre		kg/day g/day/acre		kg/day g/day/acre		kg/day g/day/acre	
5.9x10	$^{-11}$ x Daily storm volume (L)	7.6×10^{-12} x Daily storm volume (L)	3.2×10^{-10} x Daily storm volume (L)	4.2×10^{-11} x Daily storm volume (L)	1.2×10^{-9} x Daily storm volume (L)	1.5×10^{-10} x Daily storm volume (L)	3.01×10^{-9} x Daily storm volume (L)	3.9×10^{-10} x Daily storm volume (L)

Wet-weather WLA Implementation

- Within seven years of the effective date of the TMDL, the construction industry will submit the results of BMP effectiveness studies to determine BMPs that will achieve compliance with the final waste load allocations assigned to construction storm water permittees.
- Regional Board staff will bring the recommended BMPs before the Regional Board for consideration within eight years of the effective date of the TMDL.
- General construction storm water permittees will be considered in compliance with final waste load allocations if they implement these Regional Board approved BMPs. All permittees must implement the approved BMPs within nine years of the effective date of the TMDL. If no effectiveness studies are conducted and no BMPs are approved by the Regional Board within eight years of the effective date of the TMDL, each general construction storm water permit holder will be subject to site-specific BMPs and monitoring requirements to demonstrate compliance with final waste load allocations.

Dry-weather WLAs

A waste load allocation of zero is assigned to all general construction storm water permits during dry weather.

Dry-weather WLA Implementation

Non-storm water flows authorized by the General Permit for Storm Water Discharges Associated with Construction Activity (Water Quality Order No. 99-08 DWQ), or any successor order, are exempt from the dry-weather waste load allocation equal to zero as

long as they comply with the provisions of sections C.3 and A.9 of the Order No. 99-08 DWQ, which state that these authorized non-storm discharges shall be:

(1) infeasible to eliminate
(2) comply with BMPs as described in the Storm Water Pollution Prevention Plan prepared by the permittee, and
(3) not cause or contribute to a violation of water quality standards, or comparable provisions in any successor order.

Unauthorized non-storm water flows are already prohibited by Order No. 99-08 DWQ.

Region 4 Calleguas Creek Metals TMDL – Resolution No. 2006-012 (Effective Date - March 26, 2007)

Interim Limits and Final WLAs for Total Recoverable Copper, Nickel, and Selenium

Interim limits and waste load allocations are applied to receiving water.

A. Interim Limits

Constituents	Calleguas and Conejo Creek			Revolon Slough		
	Dry CMC (ug/L)	Dry CCC (ug/L)	Wet CMC (ug/L)	Dry CMC (ug/L)	Dry CCC (ug/L)	Wet CMC (ug/L)
Copper*	23	19	204	23	19	204
Nickel	15	13	(a)	15	13	(a)
Selenium	(b)	(b)	(b)	14	13	(a)

(a) The current loads do not exceed the TMDL under wet conditions; interim limits are not required.
(b) Selenium allocations have not been developed for this reach as it is not on the 303(d) list.
(c) Attainment of interim limits will be evaluated in consideration of background loading data, if available.

B. Final WLAs for Total Recoverable Copper, Nickel, and Selenium

Dry-Weather WLAs in Water Column

Flow Range	Calleguas and Conejo Creek			Revolon Slough		
	Low Flow	Average Flow	Elevated Flow	Low Flow	Average Flow	Elevated Flow
Copper1 (lbs/day)	0.04*WER - 0.02	0.12*WER - 0.02	0.18*WER - 0.03	0.03*WER - 0.01	0.06*WER - 0.03	0.13*WER - 0.02
Nickel (lbs/day)	0.100	0.120	0.440	0.050	0.069	0.116
Selenium (lbs/day)	(a)	(a)	(a)	0.004	0.003	0.004

[1] If site-specific WERs are approved by the Regional Board, TMDL waste load allocations shall be implemented in accordance with the approved WERs using the equations set forth above. Regardless of the final WERs, total copper loading shall not exceed current loading.

(a) Selenium allocations have not been developed for this reach as it is not on the 303(d) list.

Wet-Weather WLAs in Water Column

Constituent	Calleguas Creek	Revolon Slough
Copper[1] (lbs/day)	(0.00054*Q^2*0.032*Q - 0.17)*WER - 0.06	(0.0002*Q2+0.0005*Q)*WER
Nickel[2] (lbs/day)	0.014*Q^2+0.82*Q	0.027*Q^2+0.47*Q
Selenium[2] (lbs/day)	(a)	0.027*Q^2+0.47*Q

[1] If site-specific WERs are approved by the Regional Board, TMDL waste load allocations shall be implemented in accordance with the approved WERs using the equations set forth above. Regardless of the final WERs, total copper loading shall not exceed current loading.

[2] Current loads do not exceed loading capacity during wet weather. Sum of all loads cannot exceed loads presented in the table

(a) Selenium allocations have not been developed for this reach as it is not on the 303(d) list.

Q: Daily storm volume.

Interim Limits and Final WLAs for Mercury in Suspended Sediment

Flow Range	Calleguas Creek		Revolon Slough	
	Interim (lbs/yr)	Final (lbs/yr)	Interim (lbs/yr)	Final (lbs/yr)
0-15,000 MGY	3.3	0.4	1.7	0.1
15,000-25,000 MGY	10.5	1.6	4	0.7
Above 25,000 MGY	64.6	9.3	10.2	1.8

MGY: million gallons per year.

In accordance with current practice, a group concentration-based WLA has been developed for all permitted stormwater discharges, including municipal separate storm sewer systems (MS4s), Caltrans, general industrial and construction stormwater permits, and Naval Air Weapons Station Point Mugu. Dischargers will have a required 25%, 50% and 100% reduction in the difference between the current loadings and the load allocations at 5, 10 and 15 years after the effective date, respectively. Achievement of required reductions will be evaluated based on progress towards BMP implementation as outlined in the urban water quality management plans (UWQMPs). If the interim reductions are not met, the dischargers will submit a report to the Executive Officer detailing why the reductions were not met and the steps that will be taken to meet the required reductions.

Region 4 Calleguas Creek-OC Pesticides, PCBs, and Siltation (Resolution 2005-010)
Effective Date - March 24, 2006

Interim Requirements

Region 4 Calleguas Creek Source: Minor NPDES point sources/WDRs TMDL Completion Date: 3 24 2006 TMDL Type:Creek	**Pollutant Stressor**	**WLA Daily Max (µg/L)**	**WLA Monthly Ave (µg/L)**
	Chlordane 1.2		0.59
	4,4-DDD 1.7		0.84
	4,4-DDE 1.2		0.59
	4,4-DDT 1.2		0.59
	Dieldrin 0.28		0.14
	PCB's 0.34		0.17
	Toxaphene 0.33		0.16

Region 4 Calleguas Creek-Calleguas Creek Toxicicity (Resolution 2005-009)
Effective Date - March 24, 2006

Minor sources include NPDES permittees other than POTWs and MS4s, discharging to the Calleguas Creek Watershed. A wasteload of 1.0 TUc is allocated to the minor point sources discharging to the Calleguas Creek Watershed. Additionally, the following wasteloads for chlorpyrifos and diazinon are established. Final WLAs apply as of March 24, 2006.

Chlorpyrifos WLAs, ug/L
Final WLA
(4 day)
0.014
Diazinon WLAs, ug/L
Final WLA
Acute and Chronic
0.10

Region 4 Calleguas Creek-Salts (Resolution 2007-016)
Effective Date – December 2, 2008

Final Dry Weather Pollutant WLA (mg/L)					
Region 4 Calleaguas Creek Source Permitted Stormwater Dischargers TMDL Completion Date: 12 2 2008 TMDL Type:Creek	**Critical Condition Flow Rate (mgd)**	**Chloride (lb/day)**	**TDS (lb/day)**	**Sulfate (lb/day)**	**Boron (lb/day)**
Simi	1.39	1738 9849 2897 12			
Las Posas	0.13	157 887 261 N/A			
Conejo	1.26	1576 8931 2627 N/A			
Camarillo	0.06	72	406 119 N/A		
Pleasant Valley (Calleguas)	0.12	150 850 250 N/A			
Pleasant Valley (Revolon)	0.25	314	1778	523	2
Dry Weather Interim Pollutant WLA (mg/L)					
	Chloride (mg/L)	**TDS (mg/L)**	**Sulfate (mg/L)**	**Boron (mg/L)**	

Simi 230.0		1720.0	1289.0	1.3
Las Posas	230	1720	1289	1.3
Conejo 230		1720	1289	1.3
Camarillo 230		1720	1289	1.3
Pleasant Valley (Calleguas)	230	1720	1289	1.3
Pleasant Valley (Revolon)	230	1720	1289	1.3

- Dry- weather waste load allocations apply in the receiving water at the base of each subwatershed. Dry weather allocations apply when instream flow rates are below the 86th percentile flow and there has been no measurable precipitation in the previous 24 hours.
- Because wet weather flows transport a large mass of salts at low concentrations, these dischargers meet water quality objectives during wet weather. No wet weather allocations are assigned.

Ballona Creek Toxic Pollutants (Resolution No. 2005-008)
Effective Date - January 11, 2006

Each storm water permittee enrolled under the general construction or industrial storm water permits will receive an individual waste load allocation on a per acre basis, based on the acreage of their facility.

Metals per Acre WLAs for Individual General Construction or Industrial Storm Water Permittees (g/yr/ac)

Cadmium	Copper	Lead	Silver	Zinc
0.1	3 4 0.1			13

Organics per Acre WLAs for Individual General Construction or Industrial Storm Water Permittees (mg/yr/ac)

Chlordane	DDTs	Total PCBs	Total PAHs
0.04	0.14	2	350

Waste load allocations will be incorporated into the State Board general permit upon renewal or into a watershed specific general construction storm water permit developed by the Regional Board.

Within seven years of the effective date of the TMDL, the construction industry will submit the results of BMP effectiveness studies to determine BMPs that will achieve compliance with the waste load allocations assigned to construction storm water permittees. Regional Board staff will bring the recommended BMPs before the Regional Board for consideration within eight years of the

effective date of the TMDL. General construction storm water permittees will be considered in compliance with waste load allocations if they implement these Regional Board approved BMPs.

All general construction permittees must implement the approved BMPs within nine years of the effective date of the TMDL. If no effectiveness studies are conducted and no BMPs are approved by the Regional Board within eight years of the effective date of the TMDL, each general construction storm water permit holder will be subject to site-specific BMPs and monitoring requirements to demonstrate compliance with waste load allocations.

Region 4 Marina Del Rey Harbor Toxic Pollutants TMDL (Resolution No. 2005-012)
Effective Date March 22, 2006

Each storm water permittee enrolled under the general construction or industrial storm water permits will receive an individual waste load allocation on a per acre basis, based on the acreage of their facility.

Metals per Acre WLAs for Individual General Construction or Industrial Storm Water Permittees (g/yr/ac)

Copper	Lead	Zinc
2.3	3.1	10

Organics per acre WLAs for Individual General Construction or Industrial Storm Water Permittees (mg/yr/ac)

Chlordane	Total PCBs
0.03	1.5

Waste load allocations will be incorporated into the State Board general permit upon renewal or into a watershed specific general construction storm water permit developed by the Regional Board.

Within seven years of the effective date of the TMDL, the construction industry will submit the results of BMP effectiveness studies to determine BMPs that will achieve compliance with the waste load allocations assigned to construction storm water permittees. Regional Board staff will bring the recommended BMPs before the Regional Board for consideration within eight years of the effective date of the TMDL. General construction storm water permittees will be considered in compliance with waste load allocations if they implement these Regional Board approved BMPs.

All general construction permittees must implement the approved BMPs within nine years of the effective date of the TMDL. If no effectiveness studies are conducted and no BMPs are approved by the Regional Board within eight years of the effective date of

the TMDL, each general construction storm water permit holder will be subject to site-specific BMPs and monitoring requirements to demonstrate compliance with waste load allocations.

Region 4 San Gabriel River and Tributaries-Metals and Selenium (EPA-established TMDL – Effective date: 3/26/07)

Wet-weather allocations

Waterbody	Copper	Lead	Zinc
San Gabriel River Reach 2*		0.8 kg/d	
Coyote Creek**	0.513 kg/d	2.07 kg/d	3.0 kg/d

*Mass-based allocations are based on a flow of 260 cfs (daily storm volume = 6.4×10^8 liters)

**Mass-based allocations are based on a flow of 156 cfs (daily storm volume = 3.8×10^8 liters)

Dry-weather allocations

The dry-weather copper waste load allocation for general construction storm water permittees that discharge to San Gabriel Reach 1, Coyote Creek, and the Estuary is zero.

The dry-weather selenium allocation for general construction storm water permittees that discharge to San Jose Creek Reach 1 and Reach 2 is 5 µg/L (total recoverable metals).

Region 4 Upper Santa Clara River Chloride TMDL Adopted by Resolution No 2006-016 Effective Date June 12, 2008

“Other NPDES dischargers” have a chloride WLA equal to 100 mg/L.

This TMDL was revised by Resolution No 2008-012, which, when it becomes effective, includes the following conditional WLAs for “Other minor NPDES discharges”:

Reach	Concentration-based Conditional WLA for Chloride (mg/L)*
6	150 (12-month Average), 230 (Daily Maximum)
5	150 (12-month Average), 230 (Daily Maximum)
4B	117 (3-month Average), 230 (Daily Maximum)

*The conditional WLAs for chloride for all point sources shall apply only when chloride load reductions and/or chloride export projects are in operation by the Santa Clarita Valley Sanitation District according to the implementation plan for the TMDL. If these conditions are not met, WLAs shall be based on existing water quality objectives for chloride of 100 mg/L.

Region 4 The Harbor Beaches of Ventura County-Bacteria (Adopted by Resolution No. 2007-017)
Effective Date – December 18, 2008

Current and future enrollees in the Statewide Construction Activity Storm Water General Permit in the Channel Islands Harbor subwatershed are assigned WLAs of zero (0) days of allowable exceedances of the single sample limits and the rolling 30-day geometric mean limits.

Single Sample Limits are:
a. Total coliform density shall not exceed 10,000/100 ml.
b. Fecal coliform density shall not exceed 400/100 ml.
c. Enterococcus density shall not exceed 104/100 ml.
d. Total coliform density shall not exceed 1,000/100 ml, if the ratio of fecal-to-total coliform exceeds 0.1.

Rolling 30-day Geometric Mean Limits are:
a. Total coliform density shall not exceed 1,000/100 ml.
b. Fecal coliform density shall not exceed 200/100 ml.
c. Enterococcus density shall not exceed 35/100 ml.

Los Angeles Harbor Bacteria TMDL (Adopted by Resolution No. 2004-001)
Effective Date – March 10, 2005

Current and future enrollees in the Statewide Construction Activity Storm Water General Permit in the watershed are assigned WLAs of zero (0) days of allowable exceedances of the single sample limits and the rolling 30-day geometric mean.

Single Sample Limits are:
a. Total coliform density shall not exceed 10,000/100 ml.
b. Fecal coliform density shall not exceed 400/100 ml.
c. Enterococcus density shall not exceed 104/100 ml.
d. Total coliform density shall not exceed 1,000/100 ml, if the ratio of fecal-to-total coliform exceeds 0.1.

Rolling 30-day Geometric Mean Limits are:
a. Total coliform density shall not exceed 1,000/100 ml.
b. Fecal coliform density shall not exceed 200/100 ml.
c. Enterococcus density shall not exceed 35/100 ml.

Ballona Creek Bacteria TMDL (Adopted by Resolution No. 2006-011)
Effective Date – April 27, 2007

Current and future enrollees in the Statewide Construction Activity Storm Water General Permit in the watershed are assigned WLAs of zero (0) days of allowable exceedances of the single sample limits and the rolling 30-day geometric mean.

Single Sample Limits are:
a. Total coliform density shall not exceed 10,000/100 ml.
b. Fecal coliform density shall not exceed 400/100 ml.
c. Enterococcus density shall not exceed 104/100 ml.
d. Total coliform density shall not exceed 1,000/100 ml, if the ratio of fecal-to-total coliform exceeds 0.1.

Rolling 30-day Geometric Mean Limits are:
a. Total coliform density shall not exceed 1,000/100 ml.
b. Fecal coliform density shall not exceed 200/100 ml.
c. Enterococcus density shall not exceed 35/100 ml.

Region 4 Resolution No. 03-009 Los Angeles River and Tributaries-Nutrients

Minor Point Sources

Waste loads are allocated to minor point sources enrolled under NPDES or WDR permits including but not limited to Tapia WRP, Whittier Narrows WRP, Los Angeles Zoo WRP, industrial and construction stormwater, and municipal storm water and urban runoff from municipal separate storm sewer systems (MS4s)

Region 4 Minor Point Sources for NPDES/WDR Permits TMDL Effective Date: 3 23 2004 TMDL Type: River	Pollutant Stressor/WLA				
	Total Ammonia (NH_3)		**Nitrate-nitrogen (NO_3-N)**	**Nitrite-nitrogen (NO_2-N)**	**NO_3-N + NO_3-N**
	1 Hr Ave mg/l	30 Day Ave mg/l	30 Day Ave mg/l		30 Day Ave mg/l
LA River Above Los Angeles-Glendale WRP (LAG)	4.7 1.6 8.0			1.0	8.0
LA River Below LAG	8.7	2.4	8.0	1.0	8.0
Los Angeles Tributaries 10.1		2.3	8.0	1.0	8.0

Malibu Creek Attachment A to Resolution No. 2004-019R-Bacteria

Effective date: 1 24 2006. The WLAs for permittees under the NPDES General Stormwater Construction Permit are zero (0) days of allowable exceedances for the single sample limits and the rolling 30-day geometric mean.

Single Sample Limits are:
a. Total coliform density shall not exceed 10,000/100 ml.
b. Fecal coliform density shall not exceed 400/100 ml.
c. Enterococcus density shall not exceed 104/100 ml.
d. Total coliform density shall not exceed 1,000/100 ml, if the ratio of fecal-to-total coliform exceeds 0.1.

Rolling 30-day Geometric Mean Limits are:
a. Total coliform density shall not exceed 1,000/100 ml.
b. Fecal coliform density shall not exceed 200/100 ml.
c. Enterococcus density shall not exceed 35/100 ml.

Region 4 Marina del Rey Harbor, Mothers' Beach and Back Basins
Attachment A to Resolution No. 2003-012-Bacteria

Effective date: 3 18 2004. Discharges from general construction storm water permits are not expected to be a significant source of bacteria. Therefore, the WLAs for these discharges are zero (0) days of allowable exceedances for the single sample limits and the rolling 30-day geometric mean. Any future enrollees under a general NPDES permit, general industrial storm water permit or general construction storm water permit within the MdR Watershed will also be subject to a WLA of zero days of allowable exceedances.

Single Sample Limits are:
a. Total coliform density shall not exceed 10,000/100 ml.
b. Fecal coliform density shall not exceed 400/100 ml.
c. Enterococcus density shall not exceed 104/100 ml.
d. Total coliform density shall not exceed 1,000/100 ml, if the ratio of fecal-to-total coliform exceeds 0.1.

Rolling 30-day Geometric Mean Limits are:
a. Total coliform density shall not exceed 1,000/100 ml.
b. Fecal coliform density shall not exceed 200/100 ml.
c. Enterococcus density shall not exceed 35/100 ml.

Santa Clara River Nutrients TMDL (Adopted by Resolution No. 2003-011
Effective Date - March 23, 2004

Concentration-based wasteloads are allocated to municipal, industrial and construction stormwater sources regulated under NPDES permits. For stormwater permittees discharging into Reach 7, the thirty-day WLA for ammonia as nitrogen is 1.75 mg/L and the one-hour WLA for ammonia as nitrogen is 5.2 mg/L; the thirty-day average WLA for nitrate plus nitrite as nitrogen is 6.8 mg/L. For stormwater permittees discharging into Reach 3, the thirty-day WLA for ammonia as nitrogen is 2.0 mg/L and the one-hour WLA for ammonia as nitrogen is 4.2 mg/L; the thirty-day average WLA for nitrate plus nitrite nitrogen is 8.1 mg/L.

Region 8 RESOLUTION NO. R8-2007- 0024

Total Maximum Daily Loads (TMDLs) for San Diego Creek,
Upper and Lower Newport Bay, Orange County, California

Region 8 NPDES Construction Permit TMDL Completion Date: 1 24 1995 TMDL Type: River. Cr, Bay	Organochlorine Compounds							
	Total DDT		**Chlordane**		**Total PCBs**		**Toxaphene**	
	g/day	g/yr	g/day	g/yr	g/day	g/yr	g/day	g/yr
San Diego Creek	.27	99.8	**.18***	**64.3***	**.09***	**31.5***	.004	1.5
Upper Newport Bay	.11	40.3	.06	23.4	.06	23.2	**X**	**X**
Lower Newport Bay	.04	14.9	.02	8.6	.17	60.7	**X**	**X**

*Red= Informational WLA only, not for enforcement purposes

Organochlorine Compounds TMDLs Implementation Tasks and Schedule

Regional Board staff shall develop a SWPPP Improvement Program that identifies the Regional Board's expectations with respect to the content of SWPPPs, including documentation regarding the selection and implementation of BMPs, and a sampling and analysis plan. The Improvement Program shall include specific guidance regarding the development and implementation of monitoring plans, including the constituents to be monitored, sampling frequency and analytical protocols. The SWPPP Improvement Program shall be completed by (*the date of OAL approval of this BPA*). ***No later than two months*** from completion of the Improvement Program, Board staff shall assure that the requirements of the Program are communicated to interested parties, including dischargers with existing authorizations under the General Construction Permit. Existing, authorized dischargers shall revise their project SWPPPs as needed to address the Program requirements as soon as possible but ***no later than (three months of completion of the SWPPP Improvement Program)***. Applicable SWPPPs that do not adequately address the Program requirements shall be considered inadequate and enforcement by the Regional Board shall proceed accordingly. The Caltrans and Orange County MS4 permits shall be revised as needed to assure that the permittees communicate the Regional Board's SWPPP expectations, based on the SWPPP Improvement Program, with the Standard Conditions of Approval.

APPENDIX 5:
Glossary

Active Areas of Construction
All areas subject to land surface disturbance activities related to the project including, but not limited to, project staging areas, immediate access areas and storage areas. All previously active areas are still considered active areas until final stabilization is complete. [The construction activity Phases used in this General Permit are the Preliminary Phase, Grading and Land Development Phase, Streets and Utilities Phase, and the Vertical Construction Phase.]

Active Treatment System (ATS)
A treatment system that employs chemical coagulation, chemical flocculation, or electrocoagulation to aid in the reduction of turbidity caused by fine suspended sediment.

Acute Toxicity Test
A chemical stimulus severe enough to rapidly induce a negative effect; in aquatic toxicity tests, an effect observed within 96 hours or less is considered acute.

Air Deposition
Airborne particulates from construction activities.

Approved Signatory
A person who has been authorized by the Legally Responsible Person to sign, certify, and electronically submit Permit Registration Documents, Notices of Termination, and any other documents, reports, or information required by the General Permit, the State or Regional Water Board, or U.S. EPA. The Approved Signatory must be one of the following:

1. For a corporation or limited liability company: a responsible corporate officer. For the purpose of this section, a responsible corporate officer means: (a) a president, secretary, treasurer, or vice-president of the corporation in charge of a principal business function, or any other person who performs similar policy or decision-making functions for the corporation or limited liability company; or (b) the manager of the facility if authority to sign documents has been assigned or delegated to the manager in accordance with corporate procedures;

2. For a partnership or sole proprietorship: a general partner or the proprietor, respectively;

3. For a municipality, State, Federal, or other public agency: a principal executive officer, ranking elected official, city manager, council president, or any other authorized public employee with managerial responsibility over the

construction or land disturbance project (including, but not limited to, project manager, project superintendent, or resident engineer);

4. For the military: any military officer or Department of Defense civilian, acting in an equivalent capacity to a military officer, who has been designated;

5. For a public university: an authorized university official;

6. For an individual: the individual, because the individual acts as both the Legally Responsible Person and the Approved Signatory; or

7. For any type of entity not listed above (e.g. trusts, estates, receivers): an authorized person with managerial authority over the construction or land disturbance project.

Beneficial Uses
As defined in the California Water Code, beneficial uses of the waters of the state that may be protected against quality degradation include, but are not limited to, domestic, municipal, agricultural and industrial supply; power generation; recreation; aesthetic enjoyment; navigation; and preservation and enhancement of fish, wildlife, and other aquatic resources or preserves.

Best Available Technology Economically Achievable (BAT)
As defined by USEPA, BAT is a technology-based standard established by the Clean Water Act (CWA) as the most appropriate means available on a national basis for controlling the direct discharge of toxic and nonconventional pollutants to navigable waters. The BAT effluent limitations guidelines, in general, represent the best existing performance of treatment technologies that are economically achievable within an industrial point source category or subcategory.

Best Conventional Pollutant Control Technology (BCT)
As defined by USEPA, BCT is a technology-based standard for the discharge from existing industrial point sources of conventional pollutants including biochemical oxygen demand (BOD), total suspended sediment (TSS), fecal coliform, pH, oil and grease.

Best Professional Judgment (BPJ)
The method used by permit writers to develop technology-based NPDES permit conditions on a case-by-case basis using all reasonably available and relevant data.

Best Management Practices (BMPs)
BMPs are scheduling of activities, prohibitions of practices, maintenance procedures, and other management practices to prevent or reduce the discharge of pollutants. BMPs also include treatment requirements, operating procedures,

and practices to control site runoff, spillage or leaks, sludge or waste disposal, or drainage from raw material storage.

Chain of Custody (COC)
Form used to track sample handling as samples progress from sample collection to the analytical laboratory. The COC is then used to track the resulting analytical data from the laboratory to the client. COC forms can be obtained from an analytical laboratory upon request.

Coagulation
The clumping of particles in a discharge to settle out impurities, often induced by chemicals such as lime, alum, and iron salts.

Common Plan of Development
Generally a contiguous area where multiple, distinct construction activities may be taking place at different times under one plan. A plan is generally defined as any piece of documentation or physical demarcation that indicates that construction activities may occur on a common plot. Such documentation could consist of a tract map, parcel map, demolition plans, grading plans or contract documents. Any of these documents could delineate the boundaries of a common plan area. However, broad planning documents, such as land use master plans, conceptual master plans, or broad-based CEQA or NEPA documents that identify potential projects for an agency or facility are not considered common plans of development.

Daily Average Discharge
The discharge of a pollutant measured during any 24-hour period that reasonably represents a calendar day for purposes of sampling. For pollutants with limitations expressed in units of mass, the daily discharge is calculated as the total mass of the pollutant discharged during the day. For pollutants with limitations expressed in other units of measurement (e.g., concentration) the daily discharge is calculated as the average measurement of the pollutant throughout the day (40 CFR 122.2). In the case of pH, the pH must first be converted from a log scale.

Debris
Litter, rubble, discarded refuse, and remains of destroyed inorganic anthropogenic waste.

Direct Discharge
A discharge that is routed directly to waters of the United States by means of a pipe, channel, or ditch (including a municipal storm sewer system), or through surface runoff.

Discharger
The Legally Responsible Person (see definition) or entity subject to this General Permit.

Dose Rate (for ATS)
In exposure assessment, dose (e.g. of a chemical) per time unit (e.g. mg/day), sometimes also called dosage.

Drainage Area
The area of land that drains water, sediment, pollutants, and dissolved materials to a common outlet.

Effluent
Any discharge of water by a discharger either to the receiving water or beyond the property boundary controlled by the discharger.

Effluent Limitation
Any numeric or narrative restriction imposed on quantities, discharge rates, and concentrations of pollutants which are discharged from point sources into waters of the United States, the waters of the contiguous zone, or the ocean.

Erosion
The process, by which soil particles are detached and transported by the actions of wind, water, or gravity.

Erosion Control BMPs
Vegetation, such as grasses and wildflowers, and other materials, such as straw, fiber, stabilizing emulsion, protective blankets, etc., placed to stabilize areas of disturbed soils, reduce loss of soil due to the action of water or wind, and prevent water pollution.

Field Measurements
Testing procedures performed in the field with portable field-testing kits or meters.

Final Stabilization
All soil disturbing activities at each individual parcel within the site have been completed in a manner consistent with the requirements in this General Permit.

First Order Stream
Stream with no tributaries.

Flocculants
Substances that interact with suspended particles and bind them together to form flocs.

Good Housekeeping BMPs
BMPs designed to reduce or eliminate the addition of pollutants to construction site runoff through analysis of pollutant sources, implementation of proper handling/disposal practices, employee education, and other actions.

Grading Phase (part of the Grading and Land Development Phase)
Includes reconfiguring the topography and slope including; alluvium removals; canyon cleanouts; rock undercuts; keyway excavations; land form grading; and stockpiling of select material for capping operations.

Hydromodification
Hydromodification is the alteration of the hydrologic characteristics of coastal and non-coastal waters, which in turn could cause degradation of water resources. Hydromodification can cause excessive erosion and/or sedimentation rates, causing excessive turbidity, channel aggradation and/or degradation.

Identified Organisms
Organisms within a sub-sample that is specifically identified and counted.

Inactive Areas of Construction
Areas of construction activity that are not active and those that have been active and are not scheduled to be re-disturbed for at least 14 days.

Index Period
The period of time during which bioassessment samples must be collected to produce results suitable for assessing the biological integrity of streams and rivers. Instream communities naturally vary over the course of a year,and sampling during the index period ensures that samples are collected during a time frame when communities are stable so that year-to-year consistency is obtained. The index period approach provides a cost-effective alternative to year-round sampling. Furthermore, sampling within the appropriate index period will yield results that are comparable to the assessment thresholds or criteria for a given region, which are established for the same index period. Because index periods differ for different parts of the state, it is essential to know the index period for your area.

K Factor
The soil erodibility factor used in the Revised Universal Soil Loss Equation (RUSLE). It represents the combination of detachability of the soil, runoff potential of the soil, and the transportability of the sediment eroded from the soil.

Legally Responsible Person
The Legally Responsible Person (LRP) will typically be the project proponent. The categories of persons or entities that are eligible to serve as the LRP are set forth below. For any construction or land disturbance project where multiple persons or entities are eligible to serve as the LRP, those persons or entities

shall select a single LRP. In exceptional circumstances, a person or entity that qualifies as the LRP may provide written authorization to another person or entity to serve as the LRP. In such a circumstance, the person or entity that provides the authorization retains all responsibility for compliance with the General Permit. Except as provided in category 2(d), a contractor who does not satisfy the requirements of any of the categories below is not qualified to be an LRP.

The following persons or entities may serve as an LRP:

1. A person, company, agency, or other entity that possesses a real property interest (including, but not limited to, fee simple ownership, easement, leasehold, or other rights of way) in the land upon which the construction or land disturbance activities will occur for the regulated site.

2. In addition to the above, the following persons or entities may also serve as an LRP:

   a. For linear underground/overhead projects, the utility company, municipality, or other public or private company or agency that owns or operates the LUP;

   b. For land controlled by an estate or similar entity, the person who has day-to-day control over the land (including, but not limited to, a bankruptcy trustee, receiver, or conservator);

   c. For pollution investigation and remediation projects, any potentially responsible party that has received permission to conduct the project from the holder of a real property interest in the land; or

   d. For U.S. Army Corp of Engineers projects, the U.S. Army Corps of Engineers may provide written authorization to its bonded contractor to serve as the LRP, provided, however, that the U.S. Army Corps of Engineers is also responsible for compliance with the general permit, as authorized by the Clean Water Act or the Federal Facilities Compliance Act.

Likely Precipitation Event
Any weather pattern that is forecasted to have a 50% or greater chance of producing precipitation in the project area. The discharger shall obtain likely precipitation forecast information from the National Weather Service Forecast Office (e.g., by entering the zip code of the project's location at http://www.srh.noaa.gov/forecast).

Maximum Allowable Threshold Concentration (MATC)
The allowable concentration of residual, or dissolved, coagulant/flocculant in effluent. The MATC shall be coagulant/flocculant-specific, and based on toxicity

testing conducted by an independent, third-party laboratory. A typical MATC would be:

The MATC is equal to the geometric mean of the NOEC (No Observed Effect Concentration) and LOEC (Lowest Observed Effect Concentration) Acute and Chronic toxicity results for most sensitive species determined for the specific coagulant. The most sensitive species test shall be used to determine the MATC.

Natural Channel Evolution
The physical trend in channel adjustments following a disturbance that causes the river to have more energy and degrade or aggrade more sediment. Channels have been observed to pass through 5 to 9 evolution types. Once they pass though the suite of evolution stages, they will rest in a new state of equilibrium.

Non-Storm Water Discharges
Discharges are discharges that do not originate from precipitation events. They can include, but are not limited to, discharges of process water, air conditioner condensate, non-contact cooling water, vehicle wash water, sanitary wastes, concrete washout water, paint wash water, irrigation water, or pipe testing water.

Non-Visible Pollutants
Pollutants associated with a specific site or activity that can have a negative impact on water quality, but cannot be seen though observation (ex: chlorine). Such pollutants being discharged are not authorized.

Numeric Action Level (NAL)
Level is used as a warning to evaluate if best management practices are effective and take necessary corrective actions. Not an effluent limit.

Original Sample Material
The material (i.e., macroinvertebrates, organic material, gravel, etc.) remaining after the subsample has been removed for identification.

pH
Unit universally used to express the intensity of the acid or alkaline condition of a water sample. The pH of natural waters tends to range between 6 and 9, with neutral being 7. Extremes of pH can have deleterious effects on aquatic systems.

Post-Construction BMPs
Structural and non-structural controls which detain, retain, or filter the release of pollutants to receiving waters after final stabilization is attained.

Preliminary Phase (Pre-Construction Phase - Part of the Grading and Land Development Phase)
Construction stage including rough grading and/or disking, clearing and grubbing operations, or any soil disturbance prior to mass grading.

Project

Qualified SWPPP Developer
Individual who is authorized to develop and revise SWPPPs.

Qualified SWPPP Practitioner
Individual assigned responsibility for non-storm water and storm water visual observations, sampling and analysis, and responsibility to ensure full compliance with the permit and implementation of all elements of the SWPPP, including the preparation of the annual compliance evaluation and the elimination of all unauthorized discharges.

Qualifying Rain Event
Any event that produces 0.5 inches or more precipitation with a 48 hour or greater period between rain events.

R Factor
Erosivity factor used in the Revised Universal Soil Loss Equation (RUSLE). The R factor represents the erosivity of the climate at a particular location. An average annual value of R is determined from historical weather records using erosivity values determined for individual storms. The erosivity of an individual storm is computed as the product of the storm's total energy, which is closely related to storm amount, and the storm's maximum 30-minute intensity.

Rain Event Action Plan (REAP)
Written document, specific for each rain event, that when implemented is designed to protect all exposed portions of the site within 48 hours of any likely precipitation event.

Remaining Sub sampled Material
The material (e.g., organic material, gravel, etc.) that remains after the organisms to be identified have been removed from the subsample for identification. (Generally, no macroinvertebrates are present in the remaining subsampled material, but the sample needs to be checked and verified using a complete Quality Assurance (QA) plan)

Routine Maintenance
Activities intended to maintain the original line and grade, hydraulic capacity, or original purpose of a facility.

Runoff Control BMPs
Measures used to divert runon from offsite and runoff within the site.

Run-on
Discharges that originate offsite and flow onto the property of a separate project site.

Revised Universal Soil Loss Equation (RUSLE)
Empirical model that calculates average annual soil loss as a function of rainfall and runoff erosivity, soil erodibility, topography, erosion controls, and sediment controls.

Sampling and Analysis Plan
Document that describes how the samples will be collected, under what conditions, where and when the samples will be collected, what the sample will be tested for, what test methods and detection limits will be used, and what methods/procedures will be maintained to ensure the integrity of the sample during collection, storage, shipping and testing (i.e., quality assurance/quality control protocols).

Sediment
Solid particulate matter, both mineral and organic, that is in suspension, is being transported, or has been moved from its site of origin by air, water, gravity, or ice and has come to rest on the earth's surface either above or below sea level.

Sedimentation
Process of deposition of suspended matter carried by water, wastewater, or other liquids, by gravity. It is usually accomplished by reducing the velocity of the liquid below the point at which it can transport the suspended material.

Sediment Control BMPs
Practices that trap soil particles after they have been eroded by rain, flowing water, or wind. They include those practices that intercept and slow or detain the flow of storm water to allow sediment to settle and be trapped (e.g., silt fence, sediment basin, fiber rolls, etc.).

Settleable Solids (SS)
Solid material that can be settled within a water column during a specified time frame. It is typically tested by placing a water sample into an Imhoff settling cone and then allowing the solids to settle by gravity for a given length of time. Results are reported either as a volume (mL/L) or a mass (mg/L) concentration.

Sheet Flow
Flow of water that occurs overland in areas where there are no defined channels where the water spreads out over a large area at a uniform depth.

Site

Soil Amendment
Any material that is added to the soil to change its chemical properties, engineering properties, or erosion resistance that could become mobilized by storm water.

Streets and Utilities Phase
Construction stage including excavation and street paving, lot grading, curbs, gutters and sidewalks, public utilities, public water facilities including fire hydrants, public sanitary sewer systems, storm sewer system and/or other drainage improvements.

Structural Controls
Any structural facility designed and constructed to mitigate the adverse impacts of storm water and urban runoff pollution

Suspended Sediment Concentration (SSC)
The measure of the concentration of suspended solid material in a water sample by measuring the dry weight of all of the solid material from a known volume of a collected water sample. Results are reported in mg/L.

Total Suspended Solids (TSS)
The measure of the suspended solids in a water sample includes inorganic substances, such as soil particles and organic substances, such as algae, aquatic plant/animal waste, particles related to industrial/sewage waste, etc. The TSS test measures the concentration of suspended solids in water by measuring the dry weight of a solid material contained in a known volume of a sub-sample of a collected water sample. Results are reported in mg/L.

Toxicity
The adverse response(s) of organisms to chemicals or physical agents ranging from mortality to physiological responses such as impaired reproduction or growth anomalies.

Turbidity
The cloudiness of water quantified by the degree to which light traveling through a water column is scattered by the suspended organic and inorganic particles it contains. The turbidity test is reported in Nephelometric Turbidity Units (NTU) or Jackson Turbidity Units (JTU).

Vertical Construction Phase
The Build out of structures from foundations to roofing, including rough landscaping.

Waters of the United States
Generally refers to surface waters, as defined by the federal Environmental Protection Agency in 40 C.F.R. § 122.2.[1]

Water Quality Objectives (WQO)
Water quality objectives are defined in the California Water Code as limits or levels of water quality constituents or characteristics, which are established for the reasonable protection of beneficial uses of water or the prevention of nuisance within a specific area.

[1] The application of the definition of "waters of the United States" may be difficult to determine; there are currently several judicial decisions that create some confusion. If a landowner is unsure whether the discharge must be covered by this General Permit, the landowner may wish to seek legal advice.

APPENDIX 6:
Acronym List

ASBS	Areas of Special Biological Significance
ASTM	American Society of Testing and Materials; Standard Test Method for Particle-Size Analysis of Soils
ATS	Active Treatment System
BASMAA	Bay Area Storm water Management Agencies Association
BAT	Best Available Technology Economically Achievable
BCT	Best Conventional Pollutant Control Technology
BMP	Best Management Practices
BOD	Biochemical Oxygen Demand
BPJ	Best Professional Judgment
CAFO	Confined Animal Feeding Operation
CCR	California Code of Regulations
CEQA	California Environmental Quality Act
CFR	Code of Federal Regulations
CGP	NPDES General Permit for Storm Water Discharges Associated with Construction Activities
CIWQS	California Integrated Water Quality System
CKD	Cement Kiln Dust
COC	Chain of Custody
CPESC	Certified Professional in Erosion and Sediment Control
CPSWQ	Certified Professional in Storm Water Quality
CSMP	Construction Site Monitoring Program
CTB	Cement Treated Base
CTR	California Toxics Rule
CWA	Clean Water Act
CWC	California Water Code
CWP	Center for Watershed Protection
DADMAC	Diallyldimethyl-ammonium chloride
DDNR	Delaware Department of Natural Resources
DFG	Department of Fish and Game
DHS	Department of Health Services
DWQ	Division of Water Quality
EC	Electrical Conductivity
ELAP	Environmental Laboratory Accreditation Program
EPA	Environmental Protection Agency
ESA	Environmentally Sensitive Area
ESC	Erosion and Sediment Control
HSPF	Hydrologic Simulation Program Fortran
JTU	Jackson Turbidity Units
LID	Low Impact Development
LOEC	Lowest Observed Effect Concentration
LRP	Legally Responsible Person
LUP	Linear Underground/Overhead Projects

MATC	Maximum Allowable Threshold Concentration
MDL	Method Detection Limits
MRR	Monitoring and Reporting Requirements
MS4	Municipal Separate Storm Sewer System
MUSLE	Modified Universal Soil Loss Equation
NAL	Numeric Action Level
NEL	Numeric Effluent Limitation
NICET	National Institute for Certification in Engineering Technologies
NOAA	National Oceanic and Atmospheric Administration
NOEC	No Observed Effect Concentration
NOI	Notice of Intent
NOT	Notice of Termination
NPDES	National Pollutant Discharge Elimination System
NRCS	Natural Resources Conservation Service
NTR	National Toxics Rule
NTU	Nephelometric Turbidity Units
O&M	Operation and Maintenance
PAC	Polyaluminum chloride
PAM	Polyacrylamide
PASS	Polyaluminum chloride Silica/sulfate
POC	Pollutants of Concern
PoP	Probability of Precipitation
POTW	Publicly Owned Treatment Works
PRDs	Permit Registration Documents
PWS	Planning Watershed
QAMP	Quality Assurance Management Plan
QA/QC	Quality Assurance/Quality Control
REAP	Rain Event Action Plan
Regional Board	Regional Water Quality Control Board
ROWD	Report of Waste Discharge
RUSLE	Revised Universal Soil Loss Equation
RW	Receiving Water
SMARTS	Storm water Multi Application Reporting and Tracking System
SS	Settleable Solids
SSC	Suspended Sediment Concentration
SUSMP	Standard Urban Storm Water Mitigation Plan
SW	Storm Water
SWARM	Storm Water Annual Report Module
SWAMP	Surface Water Ambient Monitoring Program
SWMM	Storm Water Management Model
SWMP	Storm Water Management Program
SWPPP	Storm Water Pollution Prevention Plan
TC	Treatment Control
TDS	Total Dissolved Solids

TMDL	Total Maximum Daily Load
TSS	Total Suspended Solids
USACOE	U.S. Army Corps of Engineers
USC	United States Code
USEPA	United States Environmental Protection Agency
USGS	United States Geological Survey
WDID	Waste Discharge Identification Number
WDR	Waste Discharge Requirements
WLA	Waste Load Allocation
WET	Whole Effluent Toxicity
WRCC	Western Regional Climate Center
WQBEL	Water Quality Based Effluent Limitation
WQO	Water Quality Objective
WQS	Water Quality Standard

APPENDIX 7:
State and Regional Water Resources Control Board Contacts

NORTH COAST REGION (1)
5550 Skylane Blvd, Ste. A
Santa Rose, CA 95403
(707) 576-2220 FAX: (707)523-0135

SAN FRANCISCO BAY REGION (2)
1515 Clay Street, Ste. 1400
Oakland, CA 94612
(510) 622-2300 FAX: (510) 622-2640

CENTRAL COAST REGION (3)
895 Aerovista Place, Ste 101
San Luis Obispo, CA 93401
(805) 549-3147 FAX: (805) 543-0397

LOS ANGELES REGION (4)
320 W. 4th Street, Ste. 200
Los Angeles, CA 90013
(213) 576-6600 FAX: (213) 576-6640

LAHONTAN REGION (6 SLT)
2501 Lake Tahoe Blvd.
South Lake Tahoe, CA 96150
(530) 542-5400 FAX: (530) 544-2271

VICTORVILLE OFFICE (6V)
14440 Civic Drive, Ste. 200
Victorville, CA 92392-2383
(760) 241-6583 FAX: (760) 241-7308

CENTRAL VALLEY REGION (5S)
11020 Sun Center Dr., #200
Rancho Cordova, CA 95670-6114
(916) 464-3291 FAX: (916) 464-4645

FRESNO BRANCH OFFICE (5F)
1685 E St.
Fresno, CA 93706
(559) 445-5116 FAX: (559) 445-5910

REDDING BRANCH OFFICE (5R)
415 Knollcrest Drive, Ste. 100
Redding, CA 96002
(530) 224-4845 FAX: (530) 224-4857

COLORADO RIVER BASIN REGION (7)
73-720 Fred Waring Dr., Ste. 100
Palm Desert, CA 92260
(760) 346-7491 FAX: (760) 341-6820

SANTA ANA REGION (8)
3737 Main Street, Ste. 500
Riverside, CA 92501-3339
Phone (951) 782-4130 FAX: (951) 781-6288

SAN DIEGO REGION (9)
9174 Sky Park Court, Ste. 100
San Diego, CA 92123-4340
(858) 467-2952 FAX: (858) 571-6972

STATE WATER BOARD
PO Box 1977
Sacramento, CA 95812-1977
stormwater@waterboards.ca.gov

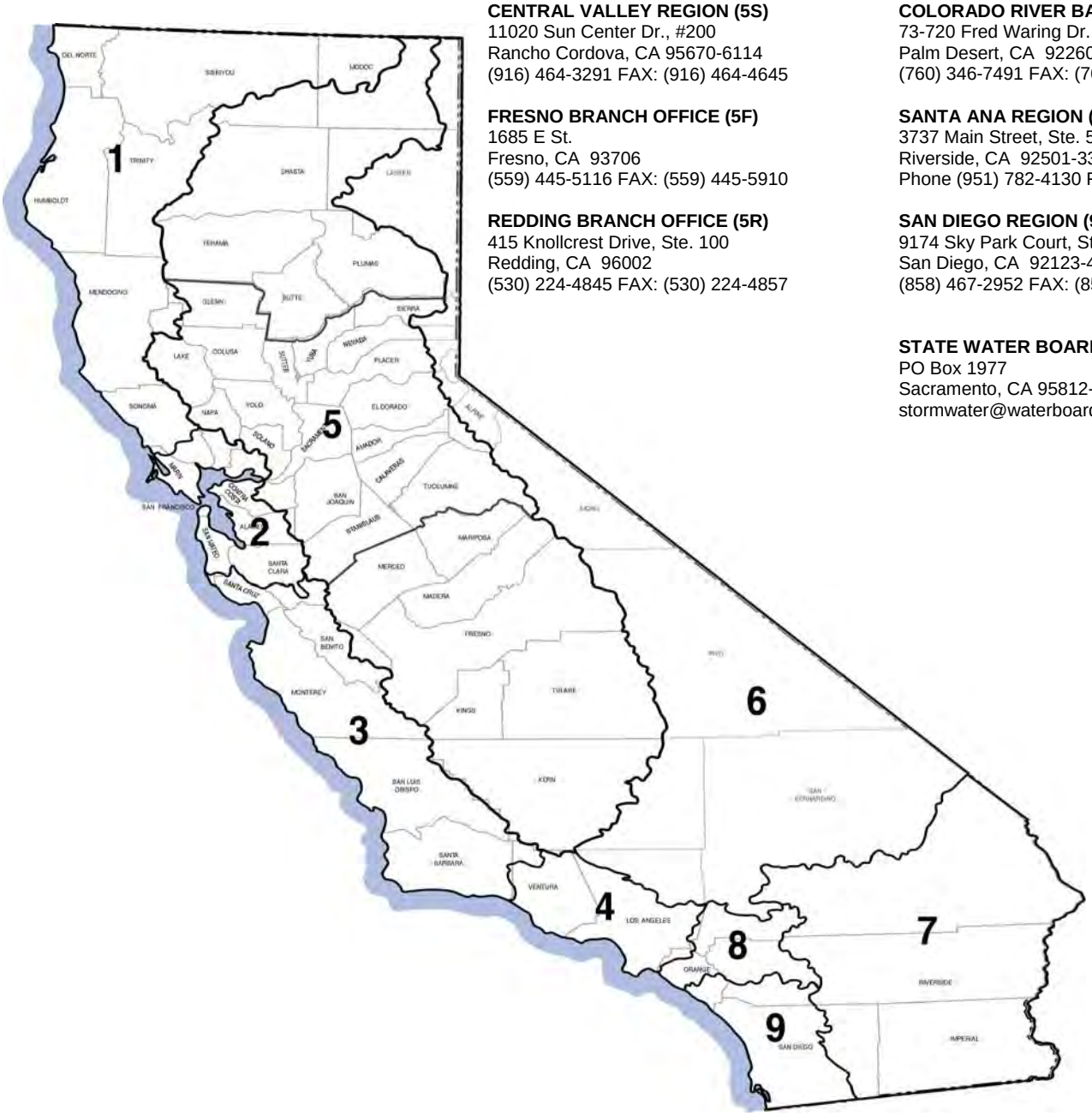

APPENDIX B

Vicinity Map and Permit Registration Documents

Approved Date: July 09, 2012

Craig Knickerbocker
Rolling Hills Covenant Church
2222 Palos Verdes Drive North
Rolling Hills Estates CA 90274

RECEIPT OF YOUR NOTICE OF INTENT (NOI)

The State Water Resources Control Board (State Water Board) has received and processed your NOI to comply with the terms of the General Permit to Discharger Storm Water Associated with Construction Activity. Accordingly, you are required to comply with the permit requirements.

The Waste Discharger Identification (WDID) number is: **4 19C364026** . Please use this number in any future communication regarding this permit.

	SITE DESCRIPTION
OWNER:	Rolling Hills Covenant Church
DEVELOPER:	Rolling Hills Covenant Church
SITE INFORMATION:	Rolling Hills Covenant Church 2222 Palos Verdes Drive North South Campus Rolling Hills Estates
TOTAL DISTURBED ACRES:	2.78
START DATE:	September 15, 2012
COMPLETION DATE:	September 02, 2013
COUNTY:	Los Angeles

When the Owner changes , a new NOI, site map, and fee must be submitted by the new Owner. As the previous owner, you are required to submit a Notice of Termination (NOT) to the local Regional Water Board stating you no longer own or operate the Site and coverage under the General Permit is not required. Unless notified, you will continue and are responsible to pay the annual fee invoiced each July.

If you have any questions regarding permit requirements, please contact your Regional Water Board at 213-576-6600 . Please visit the storm water web site at http://www.waterboards.ca.gov/water_issues/programs/stormwater/ to obtain an NOT and other storm water related information and forms.

Sincerely,

Storm Water Section
Division of Water Quality

State Water Resources Control Board

NOTICE OF INTENT

GENERAL PERMIT TO DISCHARGE STORM WATER
ASSOCIATED WITH CONSTRUCTION ACTIVITY
(WQ ORDER No. 2009-0009-DWQ)

WDID: 4 19C364026 **Risk Level:** Level1

Property Owner Information

Type: Private Business

Name:	Rolling Hills Covenant Church	Contact Name:	Craig Knickerbocker
Address:	2222 Palos Verdes Drive North	Title:	Project Manager
Address 2:		Phone #:	310-541-9022
City/State/Zip:	Rolling Hills Estates CA 90274	Email:	cknickerbocker@knickassoc.com

Contractor/Developer Information

Name:	Rolling Hills Covenant Church	Contact Name:	Craig Knickerbocker
Address:	2222 Palos Verdes Drive North	Title:	Project Manager
Address 2:		Phone #:	310-541-9022
City/State/Zip:	Rolling Hills Estates CA 90274	Email:	cknickerbocker@knickassoc.com

Construction Site Information

Site Name:	Rolling Hills Covenant Church	Contact Name:	Craig Knickerbocker
Address:	2222 Palos Verdes Drive North South Campus	Title:	Project Manager
City/State/Zip:	Rolling Hills Estates CA 90274	Site Phone #:	310-541-9022
County:	Los Angeles	Email:	cknickerbocker@knickassoc.com
Latitude:	33.773691	Longitude:	-118.318936
Total Size of Construction Area:	7.5	Construction Start:	September 15, 2012
Total Area to be Disturbed:	2.78	Complete Grading:	October 01, 2012
		Final Stabilization:	September 02, 2013

Risk Values

R: 35 K: 0.32 LS: 1.26 Beneficial Uses/303(d): No

Type of Construction: *Commercial

Receiving Water: Los Angeles Harbor

Qualified SWPPP Developer: Joseph Cota Certification #: 00037

RWQCB Jurisdiction: Region 4 - Los Angeles

Phone: 213-576-6600 Email: r4_stormwater@waterboards.ca.gov

Certification

Name Craig Knickerbocker Date: July 09, 2012

Title:

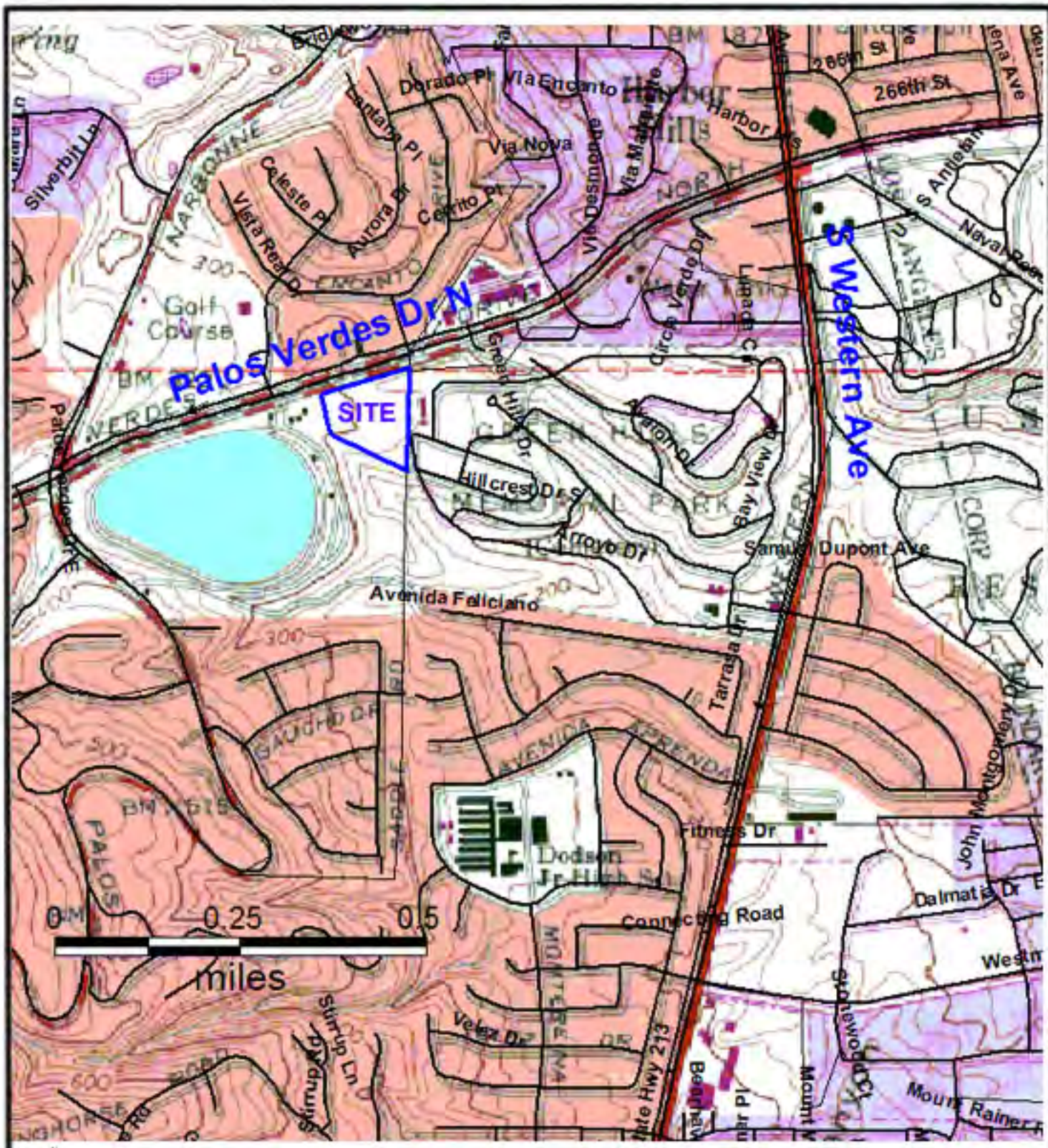

Source: USGS Torrance Quadrangle

ERI
EARTH RESOURCES INC

Vicinity Map
2222 Palos Verdes Drive North, Rolling Hills CA
Rolling Hills Covenant Church

DATE June 2012 | W.O. NO 2370

18302 Sierra Hwy #102, Santa Clarita, CA 91352
(800) 554-3205 fax (800) 554-4205

Rolling Hills Covenant Church Pre-Construction Site Photographs
2222 Palos Verdes Drive North, Rolling Hills CA 90274

Photo 1 Looking west along Palos Verdes Drive across East Entrance to Church

Photo 2 Looking east along PV Drive across West Entrance to Church

Photo 3- Looking south along East Entrance driveway.

Photo 4- Looking south from Carriage Bridal Trail toward construction area

Photo 5- Looking southeast across proposed construction area

Photo 6- Looking southeasterly across construction site to surface water discharge point

EARTH RESOURCES INC

June 18, 2012

Risk Level Determination Supporting Document

Site Location

Rolling Hills Covenant Church
2222 Palos Verdes Drive North
Rolling Hills Estates, CA 90274
Longitude: -118.318936
Latitude: 33.773691
Area of site: 7.50 acres
Area to be disturbed: 2.78 acres
Imperviousness before construction: 2.38 acres
Imperviousness after construction: 1.95 acres

I. Sediment Risk

A. R-Factor Value

1. Start date: September 15, 2012

2. End date: September 12, 2013

3. Erosivity Index Zone = **25** (from EPA Figure 1)

4. Erosivity Index Table (EPA Fact Sheet 3.1, Table 1; Revised March 2012)

September 15 - Dec 31, 2012 = 100 - 65.3 = 34.7%

January 1 – September 12, 2013 = 65.3 - 0.0 = 65.3%

Total percentage Annual R value = 34.7% + 65.3 % = **100%**

5. Isoerodent Map Value = **35** (Interpolated from Figure 4, Isoerodent Map of California)

6. **R-factor =** 35 X 100%**= 35.0**

B. K -Factor Value

K-factor = 0.32

(auto populate from SMARTS, confirm by manual review of SWRCB GIS Soil Map)

18302 Sierra Hwy #102 Santa Clarita, CA 91351 (800) 554-3205 fax (800) 554-4205

C. LS Factor

LS Factor = 1.26

Determined from SMARTS auto populate, verified by SWRCB LS Factor GIS Map

D. Site Sediment Risk Factor

Site Sediment Risk Factor, **A = R * K * LS**

A = 35 * 0.32 * 1.26 **= 14.1** tons/acre

Low Sediment Risk: < 15 tons/acre
Medium Sediment Risk: >/= 15 and <75 tons/acre
High Sediment Risk: >/= 75 tons/acre

Therefore Sediment Risk Factor is **LOW**

II. Receiving Water Risk

Receiving water: Water discharges to LA County Department of Public Works PD 969 and 180, thence through a series of LA County and LA City storm drains to Los Angeles Harbor

Auto Populate from SMARTS = **LOW**

Note: Confirmed LOW receiving water risk by manual review of SWRCB Statewide Map of High Receiving Water Risk Watersheds.

II. Combined Risk

Sediment Risk = **LOW**

Receiving Water Risk = **LOW**

Therefore Project is Risk Level 1

APPENDIX C

SWPPP Amendment Log

Project Name: Rolling Hills Covenant Church South Campus Project

Address/WDID Number: 2222 Palos Verdes Drive North, Rolling Hills CA
WDID No. 4 19C364026

Amendment No.	Date	Brief Description of Amendment	Prepared By (signature of QSD)

APPENDIX D

NAL Exceedance Site Evaluations

&

Instructions for Ad Hoc Reporting

(Insert reports into this appendix if any are generated during construction)

How to Submit an Ad Hoc Report for Construction Site Monitoring

State Water Board Order No. 2009-009-DWQ, the Construction General Permit (CGP) is a National Pollutant Discharge Elimination System (NPDES) permit that implements Federal regulations (40 CFR § 122.44) requiring enrollees to self-report effluent monitoring for their covered discharges. The CGP requires some permittees to self-report effluent monitoring information under specific circumstances. For example, if the permittees are Risk Level or Type 2 then they are subject to Numeric Action Levels (NALs). If the permittees are Risk Level or Type 3 then they are subject to Numeric Effluent Limitations (NELs). All Risk Level and Type 2 and 3 CGP permittees must report results of their sampling and analysis of effluent discharges to characterize discharges associated with construction activity from the entire area disturbed by the project. Risk Level and Type 1 permittees must conduct water quality monitoring of their effluent ***only*** if non-visible pollutants are present on the project.

The CGP requires both annual (September 1 of each year) and ad hoc electronic reporting of this information, depending on the circumstances. These instructions are specifically for ad hoc reporting. We will produce similar instructions for annual reporting as soon as possible.

All effluent monitoring information must be reported electronically through the Stormwater Multi Application & Report Tracking System (SMARTS) by the deadlines listed below:

Risk Level/LUP Type	Non-Visible Monitoring Results[1]	Effluent Monitoring Results	NAL Exceedance Results	NEL Exceedance Results
1	Prior to Annual Report Submittal		N/A	N/A
2	Prior to Annual Report Submittal		10 days after storm event conclusion	N/A
3	Prior to Annual Report Submittal		10 days after storm event conclusion	5 days after storm event conclusion

For more information on the CGP:
http://www.waterboards.ca.gov/water_issues/programs/stormwater/construction.shtml

If you have any questions please contact the Storm Water help desk at smarts@wateboards.ca.gov or 1-866-563-3107.

[1] Up to date analytical data must be included in the SWPPP

Instructions

Objectives

- Learn how to enter effluent monitoring data for Construction sites.

Prerequisites

- Best used in Internet Explorer.
- Data reviewed by a Qualified SWPPP Practitioner.

Logging into SMARTS

1. Open Internet Explorer and visit https://smarts.waterboards.ca.gov/

NOTE: This screen provides notifications regarding system maintenance times and/or other important information about SMARTS.

2. Enter your User ID & Password.

NOTE: The User ID and Password are case sensitive.

Ad Hoc Report

1. After logging in, select the menu item:

"**Annual Report**"

NOTE: Ad Hoc reports for monitoring data are part of the Annual Report. At the end of the reporting year all Ad Hoc reports will be submitted as part of the Annual Report.

2. Select the Construction Site to begin the Ad Hoc Report

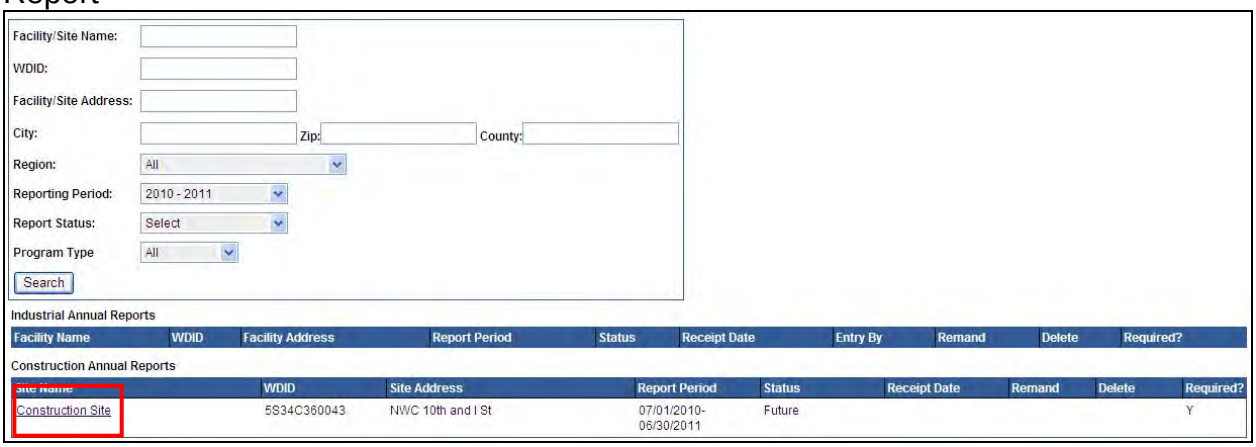

NOTE: Both Construction & Industrial Annual Reports are accessible via this search screen.

3. Begin a New Ad Hoc Report

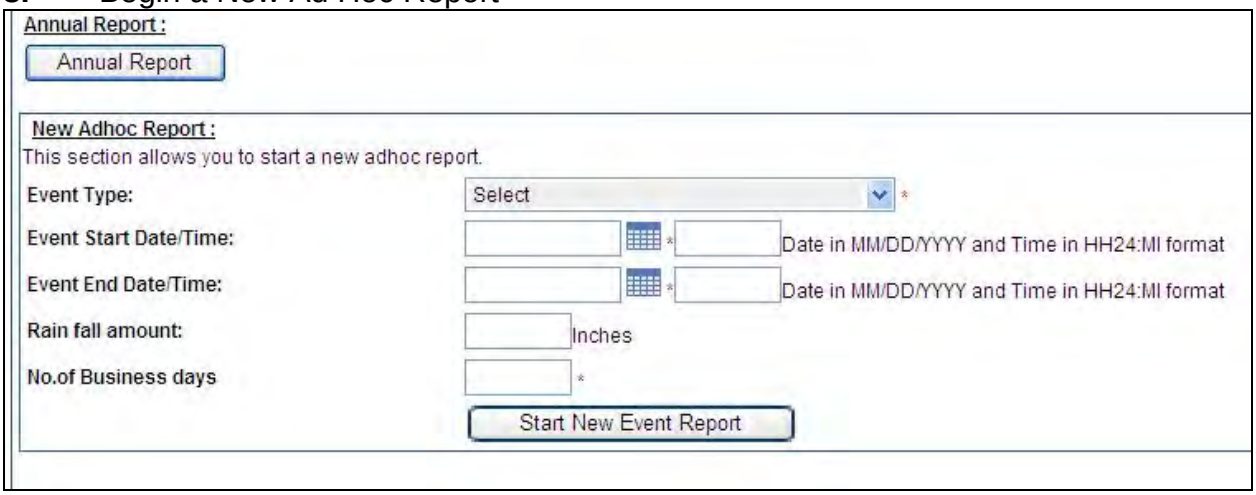

a. Select "**Event Type**"
   1) Rain Event: Storm Event producing 0.50 inches of precipitation or more.
   2) Non-Storm Water Discharge Event: All other discharges.

b. Enter "**Event Start Date/Time**" (Time is optional)

c. Enter "**Event End Date/Time**" (Time is optional)

d. Enter "**Rain fall amount**" in inches
   1) Recorded from onsite rain gauge or nearby governmental rain gauge.

e. Enter "**Number of Business Days**" during rain event
   1) Effluent monitoring is only required during normal site business hours.

f. Click on "**Start New Event Report**"

NOTE: Ad hoc reports may be saved at anytime and users can return at a later time to complete the submittal. Ad Hoc reports associated with this WDID are listed at bottom of the screen under "**Ad Hoc Reports**"

4. General Information

Owner/Site information to verify you are working in the correct WDID. If the information needs to be updated, click on "**Click here to go to NOI screens**" link.

a. Click "Next" to continue

5. Monitoring Location Tab

In this tab you create & maintain monitoring locations on the project site.

a. Click the "**Create a New Monitoring Location**" button if the appropriate monitoring location has not been created.

b. Enter Monitoring Location Information

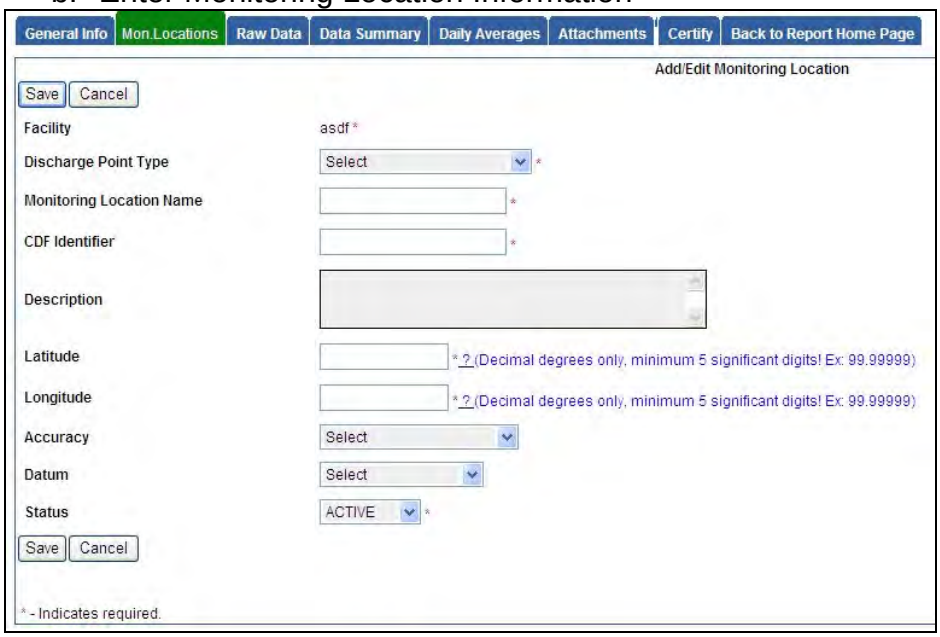

1) Select "**Discharge Point Ty**pe" from drop down

a) Effluent Monitoring
b) Influent Monitoring
c) Internal Monitoring
d) Receiving Water Monitoring

2) Enter "**Monitoring Location N**ame"
3) Enter "**CDF Identifier**"

NOTE: For future use to link data from a MS Excel spreadsheet template to upload all monitoring data at one time.

4) Enter "**Description**" (not required)

NOTE: Although the "Description" field is not required, it is recommended that a description of the monitoring location be entered (e.g. NW corner outfall)

5) Enter "**Latitude**" in decimal degrees
6) Enter "**Longitude**" in decimal degrees
7) Select "**Accuracy**" (optional)
8) Select "**Datum**" (optional)
9) Select "**Status**"
   a) Active
   b) In-Active

NOTE: For different rain events, monitoring locations may not discharge so you can choose to in-activate the monitoring location.

10) Click "**Save**" and repeat steps i – ix to add all monitoring locations
11) Click "**Next**" to continue to Raw Data tab.

6. Raw Data Tab

All monitoring data will be entered in this tab.

a. Select "**Enter New Sample**"

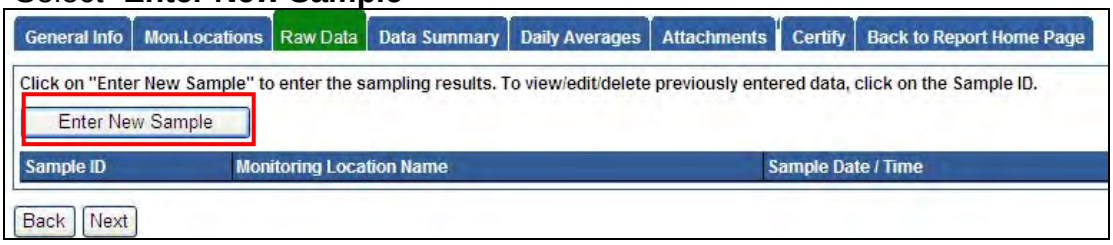

NOTE: The basic parameters and parameters specific to the site will be populated in the table.

b. Select "**Monitoring Location**" from the drop down box for this sample.
c. Enter "**Sample Date/Time**"
   The date and time must be in the following format: MM/DD/YYYY HH:MM. There must be a space in between the

date and time, and the time must be in 24-hour format (e.g. to enter March 1, 2006 at 3pm, enter 03/01/2006 15:00).

d. Enter the "**Qualified SWPPP Practitioner's**" name

e. Enter **"% of Total Discharge**"
This is the percent contribution of discharge point as compared to the sum of all discharge points (100%). Can be area or flow weighted.

f. Enter the results for the parameter(s) listed

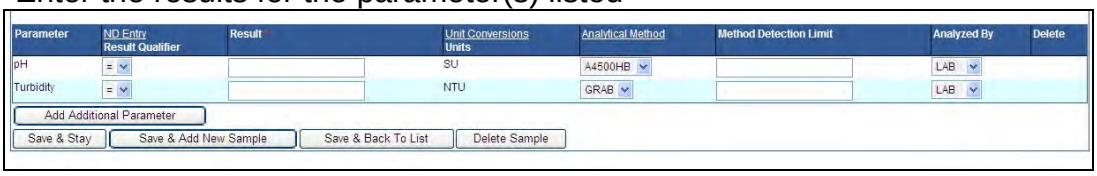

1) If a pH sample is not required, enter zero for the result. Click "Save & Stay". A hyperlink will appear on the right to "delete". Click the hyperlink to delete the parameter.

Non-Visible Pollutant/Non-Storm Water Discharge Sample

2) To add additional parameters for a non-visible pollutant discharge or non-storm water sample, click the "**Add Additional Parameter**" button and enter the additional parameters to the table.

3) Enter the Parameter Name and click "**Search**"

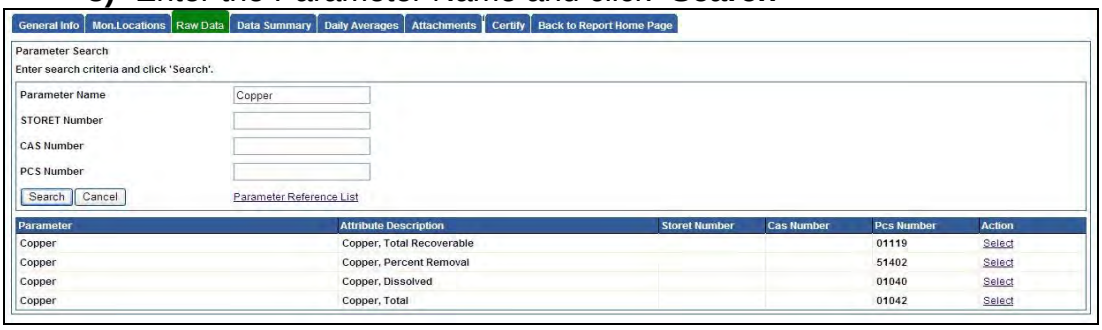

4) When a parameter result(s) appears, choose the appropriate selection by clicking the "**Select**" hyperlink under the "**Action**" column.

5) Selected parameter is added to the Raw Data table

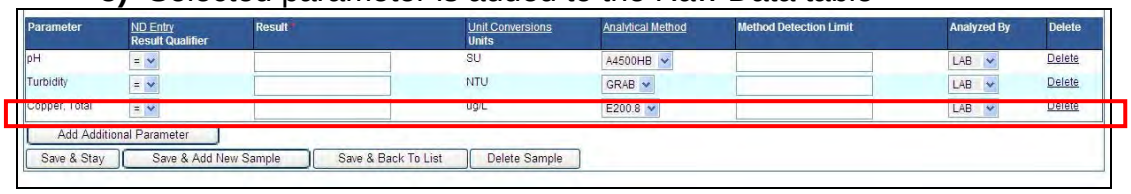

6) Enter the result for this parameter

7) If a sample result is marked as ND (non-detect), the user must locate the MDL (Method Detection Limit) on the laboratory report, change the Result Qualifier to

"<", enter the MDL value, and then again in the MDL column. Also, if the sample result is marked as "TRACE" amounts detected, change the Result Qualifier to "<", enter the most restrictive value (either PQL or MDL), and then again in the MDL column.

8) If the sample result units do not match the units listed in SMARTS, convert the result units by using the "Unit Conversions" table. Click the "**Unit Conversions**" hyperlink to view this table.

9) Click "**Save & Stay**"

10) Repeat Steps iii – ix to add additional parameters.

NOTE: The following are instructions on each "**Save**" button:

- "**Save & Stay**": Saves any changes that have been made on the screen and will remain on the screen.
- "**Save & Add New Sample**": Saves any changes that have been made on the screen and clears the data fields for a new sample record. This is to be used when multiple monitoring locations and/or samples need to be entered.
- "**Save & Back to List**": Saves any changes that have been made on the screen and takes the user back to the "Create New Event" screen.

7. Data Summary Tab

This tab allows users to review all data entered on the Raw Data tab. Return to the Raw Data tab if edits are necessary

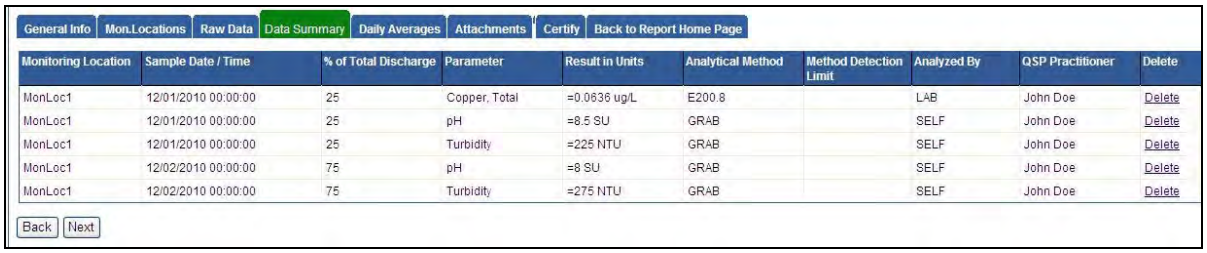

Monitoring Location	Sample Date / Time	% of Total Discharge	Parameter	Result in Units	Analytical Method	Method Detection Limit	Analyzed By	QSP Practitioner	Delete
MonLoc1	12/01/2010 00:00:00	25	Copper, Total	=0.0636 ug/L	E200.8		LAB	John Doe	Delete
MonLoc1	12/01/2010 00:00:00	25	pH	=8.5 SU	GRAB		SELF	John Doe	Delete
MonLoc1	12/01/2010 00:00:00	25	Turbidity	=225 NTU	GRAB		SELF	John Doe	Delete
MonLoc1	12/02/2010 00:00:00	75	pH	=8 SU	GRAB		SELF	John Doe	Delete
MonLoc1	12/02/2010 00:00:00	75	Turbidity	=275 NTU	GRAB		SELF	John Doe	Delete

Click "**Next**" when done reviewing the data.

a. Click "**Back**" to go to Raw Data tab.

8. Daily Average Tab

Enter the daily average for pH and/or turbidity for each business day of the rain event. The number of days is automatically populated based on the business days entered when starting the report.

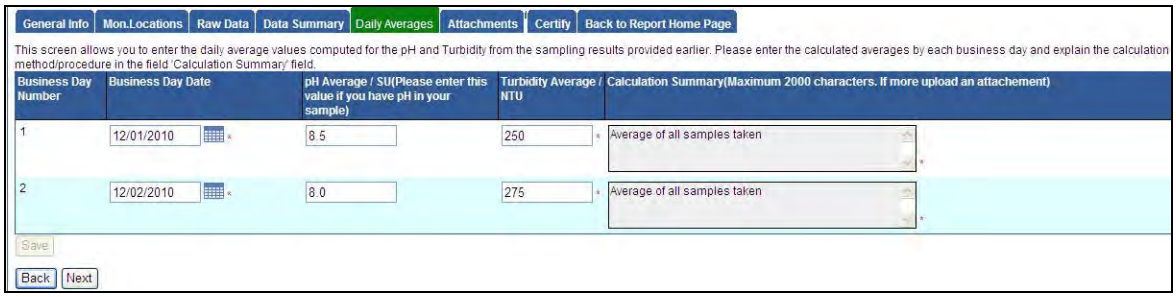

”

a. Enter “**Business Day Date”**
b. Enter “**pH**” average
c. Enter “**Turbidity**” average
d. Enter “**Calculation Summary**”
   A summary is required so Water Board staff can view what individual samples were used to calculate the submitted average.
e. Follow steps a – d for additional business days.
f. Click “**Save**” when complete.
g. Click “**Next**” to go to Attachment Tab

9. Attachments Tab
Scanned or electronic documents required for the SMARTS report are attached using this tab.

NOTE: Laboratory reports are required to be attached to the report to validate data.

a. Click “**Upload Attachment**”

NOTE: Separate Browser Window will pop-up. Make sure pop-up blockers are turned off.

b. Select the appropriate “**Attachment File Type**” from the drop down menu

c. Give the file an "**Attachment Title**"
d. If necessary, enter a "**File Description**"
e. If the document is large, you can upload in portions. i.e. 1 of 5, 2 of 5 etc…
f. Click "**Browse**" to locate the "**File Nam**e" on your computer. Click "Open" to select the file.
g. Click "**Upload**" to upload the attachment to SMARTS.
h. Once the file has successfully uploaded, it will populate in the Attachment table on the bottom of the screen.

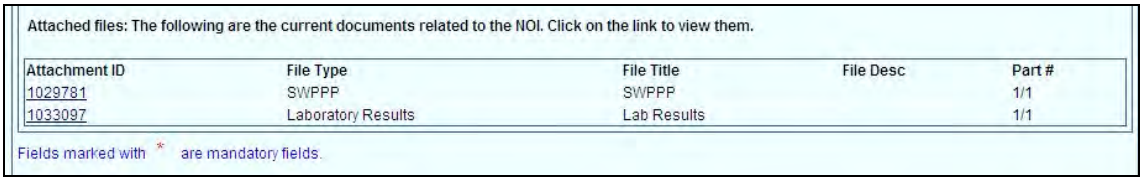
Attached files: The following are the current documents related to the NOI. Click on the link to view them.

Attachment ID	File Type	File Title	File Desc	Part #
1029781	SWPPP	SWPPP		1/1
1033097	Laboratory Results	Lab Results		1/1

Fields marked with * are mandatory fields.

i. Close the attachment window
j. Click "**Next**" to go to the Certify Tab

10. Certify Tab

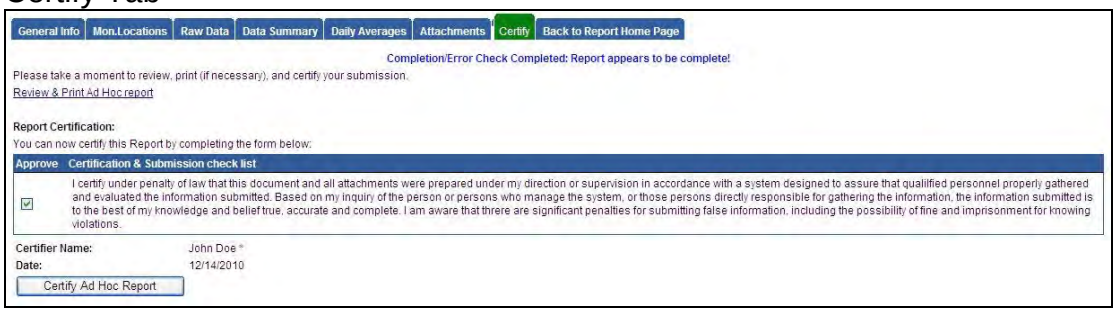

a. Click "**Perform Completion Check**"
   1) Any mandatory fields without data will be displayed.
      a) Correct any errors and Perform Completion Check again
   2) If no errors are found:
      a) You can choose to "**Review & Print the Ad Hoc report"** for your files
      b) Mark the Certification Statement and click the "**Certify Ad Hoc Report**."
         a. If you are a Data Entry Person, notify the Legally Responsible Person and/or Approved Signatory to certify the Ad Hoc Report.

11. Ad Hoc Report(s) table

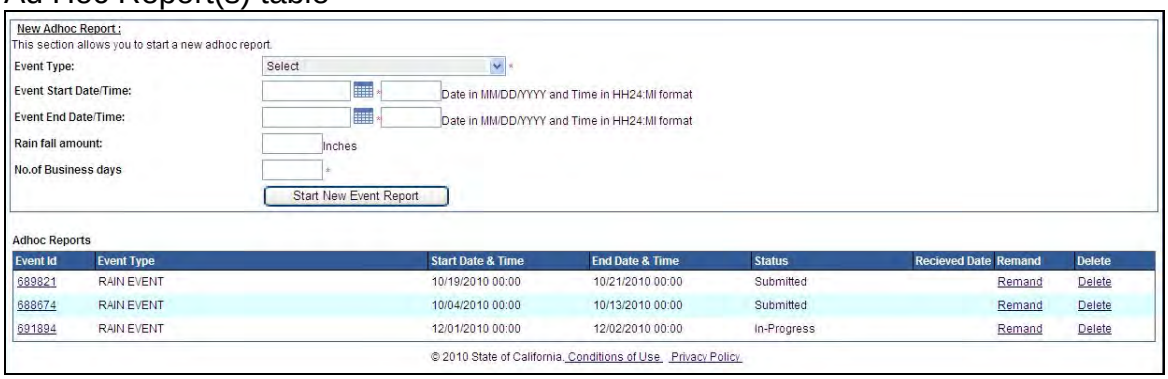

a. Ad Hoc reports that are "**In-Progress**" or "**Submitted**" are listed in the Ad Hoc reports table.
b. To continue an "**In-Progress**" or view a "**Submitted**" report, click on the "**Event ID**" to open the report.
c. "**In-Progress**" reports can be deleted by clicking the "**delete**" link on the right.
d. "**Submitted**" reports may be remanded if changes are required after the LRP or Approved Signatory certified the report.

APPENDIX E

Changes to PRDs

Due to Change in Ownership or Acreage;
Insert any new COIs, NOTs, or NOIs here

APPENDIX F

Construction Schedule

Construction Activity	Start	Complete
Implement Erosion Control Plan BMPs	0ctober 1st each year	April 15th each year
Implement Sediment Control and Wind Erosion Control BMPs	All year- Sediment control BMPs to be in place prior to Sept 15, 2012 start of construction.	Maintain continuously until project completion and final paving and landscape stabilization
Annual Compliance Report	September 1 each year	
Rough site grading (entire site and stabilize building pad for future bank site	September 15, 2012	October 1, 2012
Vertical Construction and Paving	October 1, 2012	September 2, 2013
All construction complete with stabilized future bank pad site to be completed by others		September 2, 2013

Note: The Construction manager or Superintendent should update this schedule as changes occur. If the project extends beyond the scheduled completion date, the LRP or Construction Manager must notify the QSD and the project Risk Level must be recalculated by the QSD.

APPENDIX G

BMPs Selected to Control Potential Pollutants

CONSTRUCTION SITE BMPs
CONSIDERATION CHECKLIST

The BMPs listed here should be considered for every project. Those BMPs that are not included in the SWPPP must be checked as "Not Used" with a brief statement describing why it is not being used.

EROSION CONTROL BMPs

BMP No.	BMP	CONSIDERED FOR PROJECT	CHECK IF USED	CHECK IF NOT USED	IF NOT USED, STATE REASON
EC-1	Scheduling	X	X		
EC-2	Preservation of Existing Vegetation	X		X	Site will be mass graded,
EC-3	Hydraulic Mulch	X		X	No slopes
EC-4	Hydroseeding	X		X	No slopes, permanent landscaping will be used
EC-5	Soil Binders	X	X		as necessary for dust control on bare pads and areas of disturbed soils which will not have construction activity for 14 days or more
EC-6	Straw Mulch	X		X	Other BMP selected.
EC-7	Geotextiles & Mats	X	X		For temporary stockpiles or local erosion control as necessary
EC-8	Wood Mulching	X	X		Possibly in planter areas for final landscaping
EC-9	Earth Dikes & Drainage Swales	X		X	No temporary water diversion anticipated
EC-10	Velocity Dissipation Devices	X		X	No high flow runoff
EC-11	Slope Drains	X		X	No concentrated water over slopes
EC-12	Streambank Stabilization	X		X	No unprotected streambanks on site
EC-13	Polyacrylamide	X	X		or substitute for EC-5

CONSTRUCTION SITE BMPs
CONSIDERATION CHECKLIST

The BMPs listed here should be considered for every project. Those BMPs that are not included in the SWPPP must be checked as "Not Used" with a brief statement describing why it is not being used.

BMP No.	BMP	CONSIDERED FOR PROJECT	CHECK IF USED	CHECK IF NOT USED	IF NOT USED, STATE REASON
SEDIMENT CONTROL BMPs					
SE-1	Silt Fence	X		X	Only if necessary, other perimeter BMP controls selected
SE-2	Sediment Basin	X		X	Small site; no run-on water to control
SE-3	Sediment Trap	X		X	Not necessary
SE-4	Check Dam	X		X	No open channels
SE-5	Fiber Rolls	X	X		Perimeter of stockpile and storage areas as necessary
SE-6	Gravel Bag Berm	X		X	See SE-8
SE-7	Street Sweeping and Vacuuming	X	X		
SE-8	Sand Bag Barrier	X	X		Catch basin protection and around perimeter of paved areas as necessary
SE-9	Straw Bale Barrier	X		X	Sand bag barrier used instead
SE-10	Storm Drain Inlet Protection	X	X		At all future inlets for new storm filter system
SE-11	Chemical Treatment	X		X	Storm drains in place, ATS not anticipated
WIND EROSION CONTROL BMPs					
WE-1	Wind Erosion Control	X	X		
TRACKING CONTROL BMPs					
TC-1	Stabilized Construction Entrance/Exit	X	X		
TC-2	Stabilized Construction Roadway	X		X	No thoroughgoing roads. May be used for access to materials storage and staging areas as needed
TC-3	Entrance/Outlet Tire Wash	X		X	Not anticipated. Paving of streets should be completed before first rainy season

CONSTRUCTION SITE BMPs
CONSIDERATION CHECKLIST

The BMPs listed here should be considered for every project. Those BMPs that are not included in the SWPPP must be checked as "Not Used" with a brief statement describing why it is not being used.

NON-STORM WATER MANAGEMENT BMPs

BMP No.	BMP	CONSIDERED FOR PROJECT	CHECK IF USED	CHECK IF NOT USED	IF NOT USED, STATE REASON
NS-1	Water Conservation Practices	X	X		
NS-2	Dewatering Operations	X		X	No dewatering operations anticipated
NS-3	Paving and Grinding Operations	X	X		
NS-4	Temporary Stream Crossing	X		X	NA
NS-5	Clear Water Diversion	X		X	NA
NS-6	Illicit Connection/ Discharge	X	X		
NS-7	Potable Water/Irrigation	X	X		
NS-8	Vehicle and Equipment Cleaning	X	X		
NS-9	Vehicle and Equipment Fueling	X	X		
NS-10	Vehicle and Equipment Maintenance	X	X		
NS-11	Pile Driving Operations	X		X	No piles proposed
NS-12	Concrete Curing	X	X		If needed
NS-13	Concrete Finishing	X	X		If needed
NS-14	Material and Equipment Use Over Water			X	NA
NS-15	Demolition Adjacent to Water			X	NA
NS-16	Temporary Batch Plants			X	NA

CONSTRUCTION SITE BMPs
CONSIDERATION CHECKLIST

The BMPs listed here should be considered for every project. Those BMPs that are not included in the SWPPP must be checked as "Not Used" with a brief statement describing why it is not being used.

WASTE MANAGEMENT AND MATERIALS POLLUTION CONTROL BMPs

BMP No.	BMP	CONSIDERED FOR PROJECT	CHECK IF USED	CHECK IF NOT USED	IF NOT USED, STATE REASON
WM-1	Material Delivery and Storage	X	X		
WM-2	Material Use	X	X		
WM-3	Stockpile Management	X	X		
WM-4	Spill Prevention and Control	X	X		
WM-5	Solid Waste Management	X	X		
WM-6	Hazardous Waste Management	X	X		
WM-7	Contaminated Soil Management	X	X		
WM-8	Concrete Waste Management	X	X		
WM-9	Sanitary/Septic Waste Management	X	X		
WM-10	Liquid Waste Management	X		X	Not anticipated

APPENDIX H

CASQA BMP Handbook Fact Sheets

Section 3
Erosion and Sediment Control BMPs

3.1 Erosion Control

Erosion control is any source control practice that protects the soil surface and prevents soil particles from being detached by rainfall, flowing water, or wind. Erosion control consists of using project scheduling and planning to reduce soil or vegetation disturbance (particularly during the rainy season), preventing or reducing erosion potential by diverting or controlling drainage, as well as preparing and stabilizing disturbed soil areas. Erosion control BMPs that can be used to fulfill these objectives are shown in Table 3-1. It should be noted that several additional BMPs, such as Check Dams (SE-4) and Fiber Rolls (SE-5) can be used for erosion control, by reducing slope length or steepness, as well as for sediment control (i.e., perimeter control or retention of sediment). These BMPs have been included in this handbook as sediment control BMPs and are shown in Table 3-2.

Table 3-1 Erosion Control BMPs

BMP#	BMP Name
EC-1	Scheduling
EC-2	Preservation of Existing Vegetation
EC-3	Hydraulic Mulch[1]
EC-4	Hydroseeding[1]
EC-5	Soil Binders[1]
EC-6	Straw Mulch[1]
EC-7	Geotextiles & Mats[1]
EC-8	Wood Mulching
EC-9	Earth Dikes and Drainage Swales
EC-10	Velocity Dissipation Devices
EC-11	Slope Drains
EC-12	Streambank Stabilization
EC-13	Reserved[2]
EC-14	Compost Blankets[3]
EC-15	Soil Preparation / Roughening[3]
EC-16	Non-Vegetative Stabilization[3]

1) BMP fact sheet updated in 2009
2) BMP fact sheet removed in 2009 (formerly PAM)
3) New BMP fact sheet added in 2009

All inactive soil disturbed areas on the project site, and most active areas prior to the onset of rain, must be protected from erosion. Soil disturbed areas may include relatively flat areas as well as slopes. Typically, steep slopes and large exposed areas require the most robust erosion controls; flatter slopes and smaller areas still require protection, but less costly materials may be appropriate for these areas, allowing savings to be directed to the more robust BMPs for steep slopes and large exposed areas. Additional guidance on the selection of temporary slope stabilization methods is provided in Appendix F. To be effective, erosion control BMPs for slopes at disturbed areas must be protected from concentrated flows.

Some erosion control BMPs can be used effectively to temporarily prevent erosion by concentrated flows. These BMPs, used alone or in combination, prevent erosion by intercepting, diverting, conveying, and discharging concentrated flows in a manner that prevents soil detachment and transport. Temporary concentrated flow conveyance controls may be required to direct run-on around or through the project in a non-erodible fashion. Temporary concentrated flow conveyance controls include the following BMPs:

- EC-9, Earth Dikes and Drainage Swales
- EC-10, Velocity Dissipation Devices
- EC-11, Slope Drains

3.2 Sediment Control

Sediment control is any practice that traps soil particles after they have been detached and moved by rain, flowing water, or wind. Sediment control measures are usually passive systems that rely on filtering or settling the particles out of the water or wind that is transporting them.

Sediment control practices include the BMPs listed in Table 3-2.

Table 3-2 Temporary Sediment Control BMPs

BMP#	BMP Name
SE-1	Silt Fence[1]
SE-2	Sediment Basin[1]
SE-3	Sediment Trap
SE-4	Check Dam[1]
SE-5	Fiber Rolls[1]
SE-6	Gravel Bag Berm[1]
SE-7	Street Sweeping and Vacuuming
SE-8	Sandbag Barrier[1]
SE-9	Straw Bale Barrier
SE-10	Storm Drain Inlet Protection[1]
SE-11	Active Treatment Systems[1]
SE-12	Temporary Silt Dike[2]
SE-13	Compost Socks and Berms[2]
SE-14	Biofilter Bags[2]

1) BMP fact sheet updated in 2009
2) New BMP fact sheet added in 2009

Sediment control BMPs include those practices that intercept and slow or detain the flow of stormwater to allow sediment to settle and be trapped. Sediment control practices can consist of installing linear sediment barriers (such as silt fences, gravel bag berms, or fiber rolls); and constructing check dams, a sediment trap or sediment basin to retain sediment on site. Linear sediment barriers are typically placed below the toe of exposed and erodible slopes, down-slope of exposed soil areas, around soil stockpiles, and at other appropriate locations along the site perimeter. As mentioned in Section 3.1, some BMPs are dual-purpose, such as Fiber Rolls and Check Dams. By reducing effective slope length or steepness, these BMPs reduce erosion as well as promote sedimentation.

Sediment control BMPs are most effective when used in conjunction with erosion control BMPs. The combination of erosion control and sediment control is the most effective means to prevent sediment from leaving the project site and potentially entering storm drains or receiving waters. The General Permit requires that sediment controls be established and maintained at all sites and requires the combined use with erosion controls to protect disturbed areas at most sites.

3.3 Wind Erosion Control

Wind erosion control consists of applying water or other dust palliatives to prevent or minimize dust nuisance. Wind erosion control BMPs are shown in Table 3-3.

Table 3-3 Wind Erosion Control BMPs

BMP#	BMP Name
WE-1	Wind Erosion Control[1]
1) BMP fact Sheet updated in 2009	

Other BMPs that control wind erosion are EC-1 through EC-8, and EC-14 through EC-16, shown in Section 3.1 of this handbook. Be advised that some of the dust palliatives/chemical dust suppression agents may have potential water quality impacts. A sampling and analysis protocol to test for stormwater contamination from exposure to such compounds is required in the SWPPP.

3.4 Tracking Control BMPs

Tracking control consists of preventing or reducing the tracking of sediment off-site by vehicles leaving the construction area. Tracking control BMPs are shown in Table 3-4. Street Sweeping and Vacuuming (SE-7) is also a tracking control practice. All sites must have a stabilized construction entrance and implement controls to prevent off-site tracking of sediment or other loose construction-related materials. These controls should be inspected daily.

Table 3-4 Temporary Tracking Control BMPs

BMP #	BMP Name
TC-1	Stabilized Construction Entrance/ Exit
TC-2	Stabilized Construction Roadway
TC-3	Entrance/Outlet Tire Wash

Attention to control of tracking sediment off site is essential, as dirty streets and roads near a construction site create a nuisance to the public and can generate complaints to elected officials and regulators. These complaints often result in immediate inspections and regulatory actions.

3.5 Erosion and Sediment Control BMP Fact Sheet Format

A BMP fact sheet is a short document that presents detailed information about a particular BMP. Typically each fact sheet contains the information outlined in Figure 3-1. Fact sheets for each of the above activities are provided in Section 3.6.

The fact sheets also contain side bar presentations with information on BMP categories, targeted constituents, removal effectiveness, and potential alternatives.

EC-xx Example Fact Sheet

Description and Purpose

Suitable Applications

Limitations

Implementation

Costs

Inspection and Maintenance

References

Figure 3-1
Example Fact Sheet

3.6 BMP Fact Sheets

BMP fact sheets for erosion, sediment, wind, and tracking controls follow. The BMP fact sheets are individually page numbered and are suitable for inclusion in SWPPPs. Copies of the fact sheets can be individually downloaded from the CASQA BMP Handbook web site at http://www.casqa.org.

Scheduling EC-1

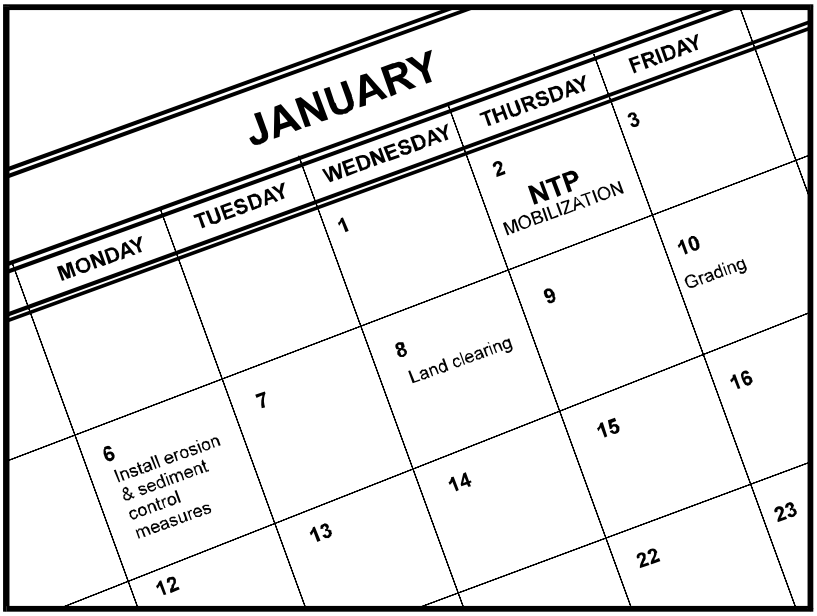

Categories

EC	Erosion Control	☑
SE	Sediment Control	☒
TC	Tracking Control	☒
WE	Wind Erosion Control	☒
NS	Non-Stormwater Management Control	
WM	Waste Management and Materials Pollution Control	

Legend:

☑ **Primary Objective**

☒ **Secondary Objective**

Targeted Constituents

Sediment	☑
Nutrients	
Trash	
Metals	
Bacteria	
Oil and Grease	
Organics	

Potential Alternatives

None

Description and Purpose

Scheduling is the development of a written plan that includes sequencing of construction activities and the implementation of BMPs such as erosion control and sediment control while taking local climate (rainfall, wind, etc.) into consideration. The purpose is to reduce the amount and duration of soil exposed to erosion by wind, rain, runoff, and vehicle tracking, and to perform the construction activities and control practices in accordance with the planned schedule.

Suitable Applications

Proper sequencing of construction activities to reduce erosion potential should be incorporated into the schedule of every construction project especially during rainy season. Use of other, more costly yet less effective, erosion and sediment control BMPs may often be reduced through proper construction sequencing.

Limitations

- Environmental constraints such as nesting season prohibitions reduce the full capabilities of this BMP.

Implementation

- Avoid rainy periods. Schedule major grading operations during dry months when practical. Allow enough time before rainfall begins to stabilize the soil with vegetation or physical means or to install sediment trapping devices.

- Plan the project and develop a schedule showing each phase

of construction. Clearly show how the rainy season relates to soil disturbing and re-stabilization activities. Incorporate the construction schedule into the SWPPP.

- Include on the schedule, details on the rainy season implementation and deployment of:
  - Erosion control BMPs
  - Sediment control BMPs
  - Tracking control BMPs
  - Wind erosion control BMPs
  - Non-stormwater BMPs
  - Waste management and materials pollution control BMPs
- Include dates for activities that may require non-stormwater discharges such as dewatering, sawcutting, grinding, drilling, boring, crushing, blasting, painting, hydro-demolition, mortar mixing, pavement cleaning, etc.
- Work out the sequencing and timetable for the start and completion of each item such as site clearing and grubbing, grading, excavation, paving, foundation pouring utilities installation, etc., to minimize the active construction area during the rainy season.
  - Sequence trenching activities so that most open portions are closed before new trenching begins.
  - Incorporate staged seeding and re-vegetation of graded slopes as work progresses.
  - Schedule establishment of permanent vegetation during appropriate planting time for specified vegetation.
- Non-active areas should be stabilized as soon as practical after the cessation of soil disturbing activities or one day prior to the onset of precipitation.
- Monitor the weather forecast for rainfall.
- When rainfall is predicted, adjust the construction schedule to allow the implementation of soil stabilization and sediment treatment controls on all disturbed areas prior to the onset of rain.
- Be prepared year round to deploy erosion control and sediment control BMPs. Erosion may be caused during dry seasons by un-seasonal rainfall, wind, and vehicle tracking. Keep the site stabilized year round, and retain and maintain rainy season sediment trapping devices in operational condition.
- Apply permanent erosion control to areas deemed substantially complete during the project's defined seeding window.

Costs

Construction scheduling to reduce erosion may increase other construction costs due to reduced economies of scale in performing site grading. The cost effectiveness of scheduling techniques should be compared with the other less effective erosion and sedimentation controls to achieve a cost effective balance.

Inspection and Maintenance

- Verify that work is progressing in accordance with the schedule. If progress deviates, take corrective actions.
- Amend the schedule when changes are warranted.
- Amend the schedule prior to the rainy season to show updated information on the deployment and implementation of construction site BMPs.

References

Stormwater Quality Handbooks Construction Site Best Management Practices (BMPs) Manual, State of California Department of Transportation (Caltrans), November 2000.

Stormwater Management for Construction Activities Developing Pollution Prevention Plans and Best Management Practices (EPA 832-R-92-005), U.S. Environmental Protection Agency, Office of Water, September 1992.

Preservation Of Existing Vegetation EC-2

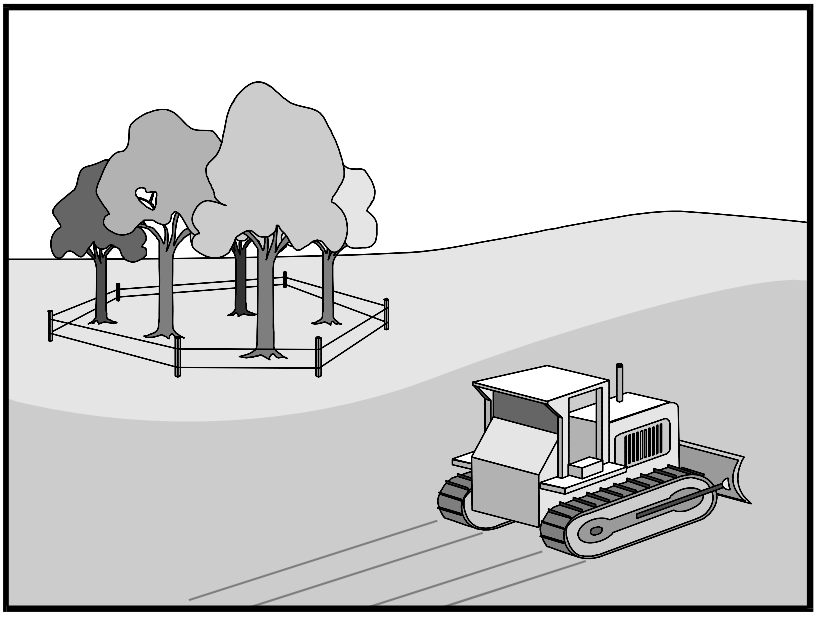

Categories

EC	Erosion Control	☑
SE	Sediment Control	
TC	Tracking Control	
WE	Wind Erosion Control	
NS	Non-Stormwater Management Control	
WM	Waste Management and Materials Pollution Control	

Legend:

☑ **Primary Objective**

☒ **Secondary Objective**

Targeted Constituents

Sediment	☑
Nutrients	
Trash	
Metals	
Bacteria	
Oil and Grease	
Organics	

Potential Alternatives

None

Description and Purpose

Carefully planned preservation of existing vegetation minimizes the potential of removing or injuring existing trees, vines, shrubs, and grasses that protect soil from erosion.

Suitable Applications

Preservation of existing vegetation is suitable for use on most projects. Large project sites often provide the greatest opportunity for use of this BMP. Suitable applications include the following:

- Areas within the site where no construction activity occurs, or occurs at a later date. This BMP is especially suitable to multi year projects where grading can be phased.
- Areas where natural vegetation exists and is designated for preservation. Such areas often include steep slopes, watercourse, and building sites in wooded areas.
- Areas where local, state, and federal government require preservation, such as vernal pools, wetlands, marshes, certain oak trees, etc. These areas are usually designated on the plans, or in the specifications, permits, or environmental documents.
- Where vegetation designated for ultimate removal can be temporarily preserved and be utilized for erosion control and sediment control.

Limitations

- Requires forward planning by the owner/developer,

contractor, and design staff.

- Limited opportunities for use when project plans do not incorporate existing vegetation into the site design.
- For sites with diverse topography, it is often difficult and expensive to save existing trees while grading the site satisfactory for the planned development.

Implementation

The best way to prevent erosion is to not disturb the land. In order to reduce the impacts of new development and redevelopment, projects may be designed to avoid disturbing land in sensitive areas of the site (e.g., natural watercourses, steep slopes), and to incorporate unique or desirable existing vegetation into the site's landscaping plan. Clearly marking and leaving a buffer area around these unique areas during construction will help to preserve these areas as well as take advantage of natural erosion prevention and sediment trapping.

Existing vegetation to be preserved on the site must be protected from mechanical and other injury while the land is being developed. The purpose of protecting existing vegetation is to ensure the survival of desirable vegetation for shade, beautification, and erosion control. Mature vegetation has extensive root systems that help to hold soil in place, thus reducing erosion. In addition, vegetation helps keep soil from drying rapidly and becoming susceptible to erosion. To effectively save existing vegetation, no disturbances of any kind should be allowed within a defined area around the vegetation. For trees, no construction activity should occur within the drip line of the tree.

Timing

- Provide for preservation of existing vegetation prior to the commencement of clearing and grubbing operations or other soil disturbing activities in areas where no construction activity is planned or will occur at a later date.

Design and Layout

- Mark areas to be preserved with temporary fencing. Include sufficient setback to protect roots.
  - Orange colored plastic mesh fencing works well.
  - Use appropriate fence posts and adequate post spacing and depth to completely support the fence in an upright position.
- Locate temporary roadways, stockpiles, and layout areas to avoid stands of trees, shrubs, and grass.
- Consider the impact of grade changes to existing vegetation and the root zone.
- Maintain existing irrigation systems where feasible. Temporary irrigation may be required.
- Instruct employees and subcontractors to honor protective devices. Prohibit heavy equipment, vehicular traffic, or storage of construction materials within the protected area.

Costs

There is little cost associated with preserving existing vegetation if properly planned during the project design, and these costs may be offset by aesthetic benefits that enhance property values. During construction, the cost for preserving existing vegetation will likely be less than the cost of applying erosion and sediment controls to the disturbed area. Replacing vegetation inadvertently destroyed during construction can be extremely expensive, sometimes in excess of $10,000 per tree.

Inspection and Maintenance

During construction, the limits of disturbance should remain clearly marked at all times. Irrigation or maintenance of existing vegetation should be described in the landscaping plan. If damage to protected trees still occurs, maintenance guidelines described below should be followed:

- Verify that protective measures remain in place. Restore damaged protection measures immediately.
- Serious tree injuries shall be attended to by an arborist.
- Damage to the crown, trunk, or root system of a retained tree shall be repaired immediately.
- Trench as far from tree trunks as possible, usually outside of the tree drip line or canopy. Curve trenches around trees to avoid large roots or root concentrations. If roots are encountered, consider tunneling under them. When trenching or tunneling near or under trees to be retained, place tunnels at least 18 in. below the ground surface, and not below the tree center to minimize impact on the roots.
- Do not leave tree roots exposed to air. Cover exposed roots with soil as soon as possible. If soil covering is not practical, protect exposed roots with wet burlap or peat moss until the tunnel or trench is ready for backfill.
- Cleanly remove the ends of damaged roots with a smooth cut.
- Fill trenches and tunnels as soon as possible. Careful filling and tamping will eliminate air spaces in the soil, which can damage roots.
- If bark damage occurs, cut back all loosened bark into the undamaged area, with the cut tapered at the top and bottom and drainage provided at the base of the wood. Limit cutting the undamaged area as much as possible.
- Aerate soil that has been compacted over a trees root zone by punching holes 12 in. deep with an iron bar, and moving the bar back and forth until the soil is loosened. Place holes 18 in. apart throughout the area of compacted soil under the tree crown.
- Fertilization
  - Fertilize stressed or damaged broadleaf trees to aid recovery.
  - Fertilize trees in the late fall or early spring.

- Apply fertilizer to the soil over the feeder roots and in accordance with label instructions, but never closer than 3 ft to the trunk. Increase the fertilized area by one-fourth of the crown area for conifers that have extended root systems.

- Retain protective measures until all other construction activity is complete to avoid damage during site cleanup and stabilization.

References

County of Sacramento Tree Preservation Ordinance, September 1981.

Stormwater Quality Handbooks Construction Site Best Management Practices (BMPs) Manual, State of California Department of Transportation (Caltrans), November 2000.

Stormwater Management of the Puget Sound Basin, Technical Manual, Publication #91-75, Washington State Department of Ecology, February 1992.

Water Quality Management Plan for The Lake Tahoe Region, Volume II, Handbook of Management Practices, Tahoe Regional Planning Agency, November 1988.

Hydraulic Mulch EC-3

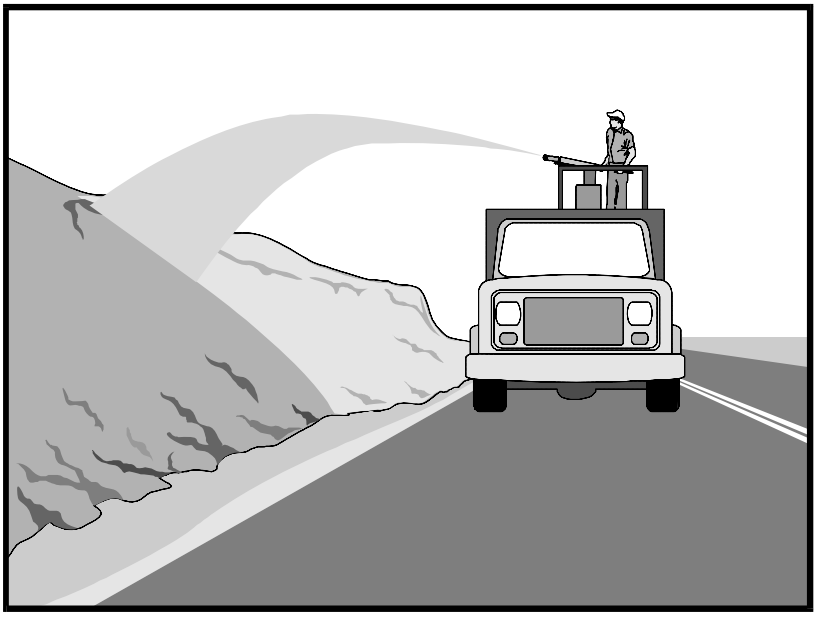

Categories

EC	Erosion Control	☑
SE	Sediment Control	
TC	Tracking Control	
WE	Wind Erosion Control	☒
NS	Non-Stormwater Management Control	
WM	Waste Management and Materials Pollution Control	

Legend:

☑ **Primary Category**

☒ **Secondary Category**

Targeted Constituents

Sediment	☑
Nutrients	
Trash	
Metals	
Bacteria	
Oil and Grease	
Organics	

Potential Alternatives

EC-4 Hydroseeding

EC-5 Soil Binders

EC-6 Straw Mulch

EC-7 Geotextiles and Mats

EC-8 Wood Mulching

EC-14 Compost Blanket

EC-16 Non-Vegetative Stabilization

Description and Purpose

Hydraulic Mulch consists of various types of fibrous materials mixed with water and sprayed onto the soil surface in slurry form to provide a layer of temporary protection from wind and water erosion.

Suitable Applications

Hydraulic mulch as a temporary, stand alone, erosion control BMP is suitable for disturbed areas that require temporary protection from wind and water erosion until permanent soil stabilization activities commence. Examples include:

- Rough-graded areas that will remain inactive for longer than permit-required thresholds (e.g., 14 days) or otherwise require stabilization to minimize erosion or prevent sediment discharges.
- Soil stockpiles.
- Slopes with exposed soil between existing vegetation such as trees or shrubs.
- Slopes planted with live, container-grown vegetation or plugs.
- Slopes burned by wildfire.

Hydraulic mulch can also be applied to augment other erosion control BMPs such as:

- In conjunction with straw mulch (see EC-6 Straw Mulch) where the rate of hydraulic mulch is reduced to 100-500 lbs per acre and the slurry is applied over the straw as a tackifying agent to hold the straw in place.
- Supplemental application of soil amendments, such as fertilizer, lime, gypsum, soil bio-stimulants or compost.

Limitations

In general, hydraulic mulch is not limited by slope length, gradient or soil type. However, the following limitations typically apply:

- Most hydraulic mulch applications, particularly bonded fiber matrices (BFMs), require at least 24 hours to dry before rainfall occurs.
- Temporary applications (i.e., without a vegetative component) may require a second application in order to remain effective for an entire rainy season.
- Treatment areas must be accessible to hydraulic mulching equipment.
- Availability of water sources in remote areas for mixing and application.
- As a stand-alone temporary BMP, hydraulic mulches may need to be re-applied to maintain their erosion control effectiveness, typically after 6-12 months depending on the type of mulch used.
- Availability of hydraulic mulching equipment may be limited just prior to the rainy season and prior to storms due to high demand.
- Cellulose fiber mulches alone may not perform well on steep slopes or in course soils.

Implementation

- Where feasible, it is preferable to prepare soil surfaces prior to application by roughening embankments and fill areas with a crimping or punching type roller or by track walking.
- The majority of hydraulic mulch applications do not necessarily require surface/soil preparation (See EC-15 Soil Preparation) although in almost every case where re-vegetation is included as part of the practice, soil preparation can be beneficial. One of the advantages of hydraulic mulch over other erosion control methods is that it can be applied in areas where soil preparation is precluded by site conditions, such as steep slopes, rocky soils, or inaccessibility.
- Avoid mulch over spray onto roads, sidewalks, drainage channels, existing vegetation, etc.
- Hydraulic mulching is generally performed utilizing specialized machines that have a large water-holding/mixing tank and some form of mechanical agitation or other recirculation method to keep water, mulch and soil amendments in suspension. The mixed hydraulic slurry can be applied from a tower sprayer on top of the machine or by extending a hose to areas remote from the machine.

- Where possible apply hydraulic mulch from multiple directions to adequately cover the soil. Application from a single direction can result in shadowing, uneven coverage and failure of the BMP.
- Hydraulic mulch can also include a vegetative component, such as seed, rhizomes, or stolons (see EC-4 Hydraulic Seed).
- Typical hydraulic mulch application rates range from 2,000 pounds per acre for standard mulches (SMs) to 3,500 pounds per acre for BFMs. However, the required amount of hydraulic mulch to provide adequate coverage of exposed topsoil may appear to exceed the standard rates when the roughness of the soil surface is changed due to soil preparation methods (see EC-15 Soil Preparation) or by slope gradient.
- Other factors such as existing soil moisture and soil texture can have a profound effect on the amount of hydraulic mulch required (i.e. application rate) applied to achieve an erosion-resistant covering.
- Avoid use of mulch without a tackifier component, especially on slopes.
- Mulches used in the hydraulic mulch slurry can include:
  - Cellulose fiber
  - Thermally-processed wood fibers
  - Cotton
  - Synthetics
  - Compost (see EC-14, Compost Blanket)
- Additional guidance on the comparison and selection of temporary slope stabilization methods is provided in Appendix F of the Handbook.

Categories of Hydraulic Mulches

Standard Hydraulic Mulch (SM)

Standard hydraulic mulches are generally applied at a rate of 2,000 pounds per acre and are manufactured containing around 5% tackifier (i.e. soil binder), usually a plant-derived guar or psyllium type. Most standard mulches are green in color derived from food-color based dyes.

Hydraulic Matrices (HM) and Stabilized Fiber Matrices (SFM)

Hydraulic matrices and stabilized fiber matrices are slurries which contain increased levels of tackifiers/soil binders; usually 10% or more by weight. HMs and SFMs have improved performance compared to a standard hydraulic mulch (SM) because of the additional percentage of tackifier and because of their higher application rates, typically 2,500 – 4,000 pounds per acre. Hydraulic matrices can include a mixture of fibers, for example, a 50/50 blend of paper and wood fiber. In the case of an SFM, the tackifier/soil binder is specified as a polyacrylamide (PAM).

Bonded Fiber Matrix (BFM)

Bonded fiber matrices (BFMs) are hydraulically-applied systems of fibers, adhesives (typically guar based) and chemical cross-links. Upon drying, the slurry forms an erosion-resistant blanket that prevents soil erosion and promotes vegetation establishment. The cross-linked adhesive in the BFM should be biodegradable and should not dissolve or disperse upon re-wetting. BFMs are typically applied at rates from 3,000 to 4,000 lbs/acre based on the manufacturer's recommendation. BFMs should not be applied immediately before, during or immediately after rainfall or if the soil is saturated. Depending on the product, BFMs typically require 12 to 24 hours to dry and become effective.

Mechanically-Bonded Fiber Matrices (MBFM)

Mechanically-bonded fiber matrices (MBFMs) are hydraulically applied systems similar to BFM that use crimped synthetic fibers and PAM and are typically applied to a slope at a higher application rate than a standard BFM.

Hydraulic Compost Matrix (HCM)

Hydraulic compost matrix (HCM) is a field-derived practice whereby finely graded or sifted compost is introduced into the hydraulic mulch slurry. A guar-type tackifier can be added for steeper slope applications as well as any specified seed mixtures. A HCM can help to accelerate seed germination and growth. HCMs are particularly useful as an in-fill for three-dimensional re-vegetation geocomposites, such as turf reinforcement mats (TRM) (see EC-7 Geotextiles and Mats).

Costs

Average installed costs for hydraulic mulch categories are is provided in Table 1, below.

Table 1
HYDRAULIC MULCH BMPs
INSTALLED COSTS

BMP	Installed Cost/Acre
Standard Hydraulic Mulching (SM)	$1,700 - $3,600 per acre
Hydraulic Matrices (HM) and Stabilized Fiber Matrices	
Guar-based	$2,000 - $4,000 per acre
PAM-based	$2,500 - $5,610 per acre
Bonded Fiber Matrix (BFM)	$3,900 - $6,900 per acre
Mechanically Bonded Fiber Matrix (MBFM)	$4,500 - $6,000 per acre
Hydraulic Compost Matrix (HCM)	$3,000 - $3,500 per acre

Source: Caltrans Soil Stabilization BMP Research for Erosion and Sediment Controls, July 2007

Inspection and Maintenance

- Maintain an unbroken, temporary mulched ground cover throughout the period of construction when the soils are not being reworked.
- BMPs must be inspected in accordance with General Permit requirements for the associated project type and risk level. It is recommended that at a minimum, BMPs be inspected

weekly, prior to forecasted rain events, daily during extended rain events, and after the conclusion of rain events.

- Areas where erosion is evident should be repaired and BMPs re-applied as soon as possible. Care should be exercised to minimize the damage to protected areas while making repairs, as any area damaged will require re-application of BMPs.
- Compare the number of bags or weight of applied mulch to the area treated to determine actual application rates and compliance with specifications.

References

Soil Stabilization BMP Research for Erosion and Sediment Controls: Cost Survey Technical Memorandum, State of California Department of Transportation (Caltrans), July 2007.

Controlling Erosion of Construction Sites, Agricultural Information #347, U.S. Department of Agriculture (USDA), Natural Resources Conservation Service (NRCS) (formerly Soil Conservation Service – SCS).

Guides for Erosion and Sediment Control in California, USDA Soils Conservation Service, January 1991.

Manual of Standards of Erosion and Sediment Control Measures, Association of Bay Area Governments, May 1995.

Sedimentation and Erosion Control, An Inventory of Current Practices Draft, US EPA, April 1990.

Soil Erosion by Water, Agriculture Information Bulletin #513, U.S. Department of Agriculture, Soil Conservation Service.

Stormwater Quality Handbooks Construction Site Best Management Practices (BMPs) Manual, State of California Department of Transportation (Caltrans), March 2003.

Guidance Document: Soil Stabilization for Temporary Slopes, State of California Department of Transportation (Caltrans), November 1999

Stormwater Management of the Puget Sound Basin, Technical Manual, Publication #91-75, Washington State Department of Ecology, February 1992.

Water Quality Management Plan for the Lake Tahoe Region, Volume II, Handbook of Management Practices, Tahoe Regional Planning Agency, November 1988.

Hydroseeding EC-4

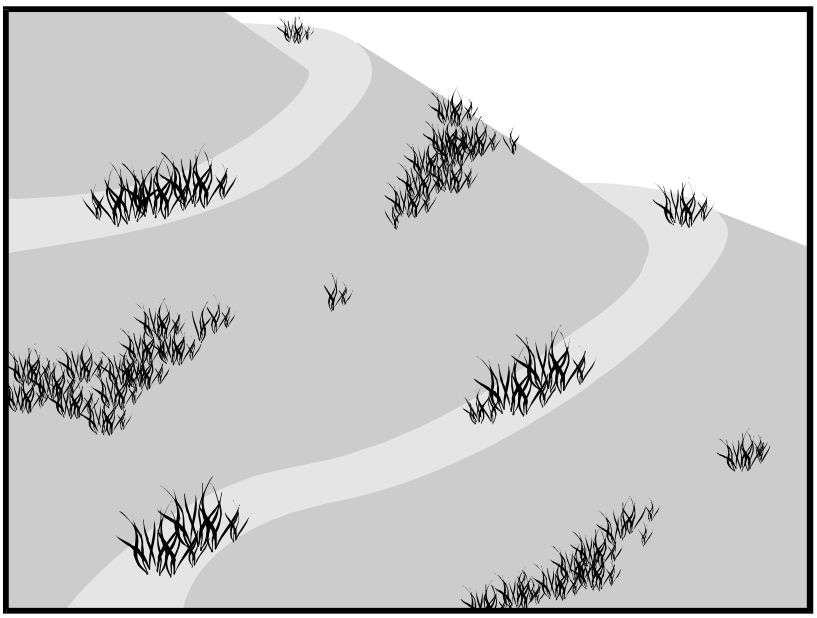

Categories

EC	Erosion Control	☑
SE	Sediment Control	
TC	Tracking Control	
WE	Wind Erosion Control	☒
NS	Non-Stormwater Management Control	
WM	Waste Management and Materials Pollution Control	

Legend:

☑ **Primary Category**

☒ **Secondary Category**

Targeted Constituents

Sediment	☑
Nutrients	
Trash	
Metals	
Bacteria	
Oil and Grease	
Organics	

Potential Alternatives

EC-3 Hydraulic Mulch

EC-5 Soil Binders

EC-6 Straw Mulch

EC-7 Geotextiles and Mats

EC-8 Wood Mulching

EC-14 Compost Blanket

EC-16 Non-Vegetative Stabilization

Description and Purpose

Hydroseeding typically consists of applying a mixture of a hydraulic mulch, seed, fertilizer, and stabilizing emulsion with a hydraulic mulcher, to temporarily protect exposed soils from erosion by water and wind. Hydraulic seeding, or hydroseeding, is simply the method by which temporary or permanent seed is applied to the soil surface.

Suitable Applications

Hydroseeding is suitable for disturbed areas requiring temporary protection until permanent stabilization is established, for disturbed areas that will be re-disturbed following an extended period of inactivity, or to apply permanent stabilization measures. Hydroseeding without mulch or other cover (e.g. EC-7, Erosion Control Blanket) is not a stand-alone erosion control BMP and should be combined with additional measures until vegetation establishment.

Typical applications for hydroseeding include:

- Disturbed soil/graded areas where permanent stabilization or continued earthwork is not anticipated prior to seed germination.
- Cleared and graded areas exposed to seasonal rains or temporary irrigation.
- Areas not subject to heavy wear by construction equipment or high traffic.

Limitations

- Availability of hydroseeding equipment may be limited just prior to the rainy season and prior to storms due to high demand.
- Hydraulic seed should be applied with hydraulic mulch or a stand-alone hydroseed application should be followed by one of the following:
    - Straw mulch (see Straw Mulch EC-6)
    - Rolled erosion control products (see Geotextiles and Mats EC-7)
    - Application of Compost Blanket (see Compost Blanket EC-14)

  Hydraulic seed may be used alone only on small flat surfaces when there is sufficient time in the season to ensure adequate vegetation establishment and coverage to provide adequate erosion control.
- Hydraulic seed without mulch does not provide immediate erosion control.
- Temporary seeding may not be appropriate for steep slopes (i.e., slopes readily prone to rill erosion or without sufficient topsoil).
- Temporary seeding may not be appropriate in dry periods without supplemental irrigation.
- Temporary vegetation may have to be removed before permanent vegetation is applied.
- Temporary vegetation may not be appropriate for short term inactivity (i.e. less than 3-6 months).

Implementation

In order to select appropriate hydraulic seed mixtures, an evaluation of site conditions should be performed with respect to:

- Soil conditions
- Site topography and exposure (sun/wind)
- Season and climate
- Vegetation types
- Maintenance requirements
- Sensitive adjacent areas
- Water availability
- Plans for permanent vegetation

The local office of the U.S.D.A. Natural Resources Conservation Service (NRCS) is an excellent source of information on appropriate seed mixes.

The following steps should be followed for implementation:

- Where appropriate or feasible, soil should be prepared to receive the seed by disking or otherwise scarifying (See EC-15, Soil Preparation) the surface to eliminate crust, improve air and water infiltration and create a more favorable environment for germination and growth.

- Avoid use of hydraulic seed in areas where the BMP would be incompatible with future earthwork activities.
- Hydraulic seed can be applied using a multiple step or one step process.
  - In a multiple step process, hydraulic seed is applied first, followed by mulch or a Rolled Erosion Control Product (RECP).
  - In the one step process, hydraulic seed is applied with hydraulic mulch in a hydraulic matrix. When the one step process is used to apply the mixture of fiber, seed, etc., the seed rate should be increased to compensate for all seeds not having direct contact with the soil.
- All hydraulically seeded areas should have mulch, or alternate erosion control cover to keep seeds in place and to moderate soil moisture and temperature until the seeds germinate and grow.
- All seeds should be in conformance with the California State Seed Law of the Department of Agriculture. Each seed bag should be delivered to the site sealed and clearly marked as to species, purity, percent germination, dealer's guarantee, and dates of test. The container should be labeled to clearly reflect the amount of Pure Live Seed (PLS) contained. All legume seed should be pellet inoculated. Inoculant sources should be species specific and should be applied at a rate of 2 lb of inoculant per 100 lb seed.
- Commercial fertilizer should conform to the requirements of the California Food and Agricultural Code, which can be found at http://www.leginfo.ca.gov/.html/fac_table_of_contents.html. Fertilizer should be pelleted or granular form.
- Follow up applications should be made as needed to cover areas of poor coverage or germination/vegetation establishment and to maintain adequate soil protection.
- Avoid over spray onto roads, sidewalks, drainage channels, existing vegetation, etc.
- Additional guidance on the comparison and selection of temporary slope stabilization methods is provided in Appendix F of the Handbook.

Costs

Average cost for installation and maintenance may vary from as low as $1,900 per acre for flat slopes and stable soils, to $4,000 per acre for moderate to steep slopes and/or erosive soils. Cost of seed mixtures vary based on types of required vegetation.

BMP	Installed Cost per Acre
Hydraulic Seed	$1,900-$4,000

Source: Caltrans Soil Stabilization BMP Research for Erosion and Sediment Controls, July 2007

Inspection and Maintenance

- BMPs must be inspected in accordance with General Permit requirements for the associated project type and risk level. It is recommended that at a minimum, BMPs be inspected weekly, prior to forecasted rain events, daily during extended rain events, and after the conclusion of rain events.
- Areas where erosion is evident should be repaired and BMPs re-applied as soon as possible. Care should be exercised to minimize the damage to protected areas while making repairs, as any area damaged will require re-application of BMPs.
- Where seeds fail to germinate, or they germinate and die, the area must be re-seeded, fertilized, and mulched within the planting season, using not less than half the original application rates.
- Irrigation systems, if applicable, should be inspected daily while in use to identify system malfunctions and line breaks. When line breaks are detected, the system must be shut down immediately and breaks repaired before the system is put back into operation.
- Irrigation systems should be inspected for complete coverage and adjusted as needed to maintain complete coverage.

References

Soil Stabilization BMP Research for Erosion and Sediment Controls: Cost Survey Technical Memorandum, State of California Department of Transportation (Caltrans), July 2007.

Stormwater Quality Handbooks Construction Site Best Management Practices (BMPs) Manual, State of California Department of Transportation (Caltrans), March 2003.

Guidance Document: Soil Stabilization for Temporary Slopes, State of California Department of Transportation (Caltrans), November 1999.

Soil Binders EC-5

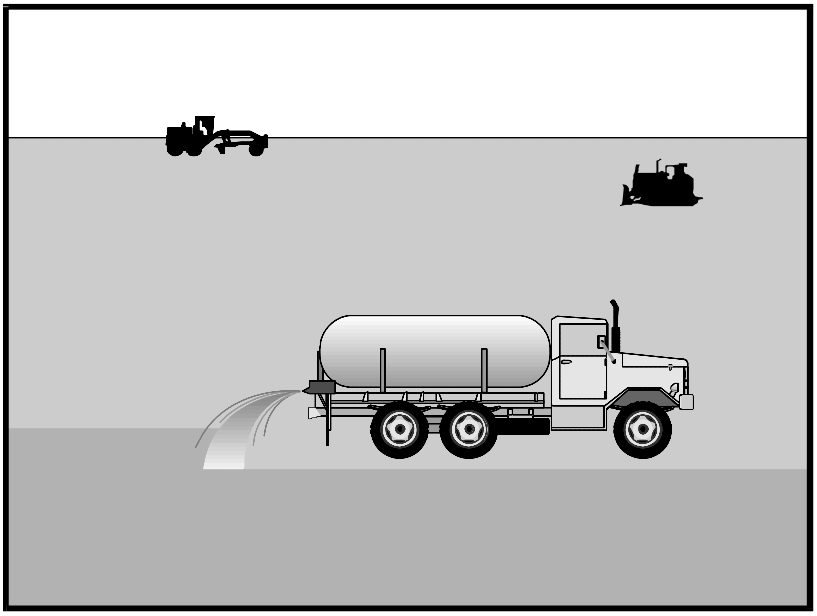

Categories

EC	Erosion Control	☑
SE	Sediment Control	
TC	Tracking Control	
WE	Wind Erosion Control	☒
NS	Non-Stormwater Management Control	
WM	Waste Management and Materials Pollution Control	

Legend:

☑ **Primary Category**

☒ **Secondary Category**

Targeted Constituents

Sediment	☑
Nutrients	
Trash	
Metals	
Bacteria	
Oil and Grease	
Organics	

Potential Alternatives

EC-3 Hydraulic Mulch

EC-4 Hydroseeding

EC-6 Straw Mulch

EC-7 Geotextiles and Mats

EC-8 Wood Mulching

Description and Purpose

Soil binding consists of application and maintenance of a soil stabilizer to exposed soil surfaces. Soil binders are materials applied to the soil surface to temporarily prevent water and wind induced erosion of exposed soils on construction sites.

Suitable Applications

Soil binders are typically applied to disturbed areas requiring temporary protection. Because soil binders, when used as a stand-alone practice, can often be incorporated into the soil, they are a good alternative to mulches in areas where grading activities will soon resume. Soil binders are commonly used in the following areas:

- Rough graded soils that will be inactive for a short period of time
- Soil stockpiles
- Temporary haul roads prior to placement of crushed rock
- Compacted soil road base
- Construction staging, materials storage, and layout areas

Limitations

- Soil binders are temporary in nature and may need reapplication.

- Soil binders require a minimum curing time until fully effective, as prescribed by the manufacturer. Curing time may be 24 hours or longer. Soil binders may need reapplication after a storm event.
- Soil binders will generally experience spot failures during heavy rainfall events. If runoff penetrates the soil at the top of a slope treated with a soil binder, it is likely that the runoff will undercut the stabilized soil layer and discharge at a point further down slope.
- Plant-material-based soil binders do not generally hold up to pedestrian or vehicular traffic across treated areas as well as polymeric emulsion blends or cementitious-based binders.
- Soil binders may not sufficiently penetrate compacted soils.
- Some soil binders are soil texture specific in terms of their effectiveness. For example, polyacrylamides (PAMs) work very well on silt and clayey soils but their performance decreases dramatically in sandy soils.
- Some soil binders may not perform well with low relative humidity. Under rainy conditions, some agents may become slippery or leach out of the soil.
- Soil binders may not cure if low temperatures occur within 24 hours of application.
- The water quality impacts of some chemical soil binders are relatively unknown and some may have water quality impacts due to their chemical makeup.

Implementation

General Considerations

- Soil binders should conform to local municipality specifications and requirements.
- Site soil types will dictate appropriate soil binders to be used.
- A soil binder must be environmentally benign (non-toxic to plant and animal life), easy to apply, easy to maintain, economical, and should not stain paved or painted surfaces. Soil binders should not pollute stormwater when cured. Obtain a Material Safety Data Sheet (MSDS) from the manufacturer to ensure non-toxicity.
- Stormwater runoff from PAM treated soils should pass through one of the following sediment control BMP prior to discharging to surface waters.
  - When the total drainage area is greater than or equal to 5 acres, PAM treated areas should drain to a sediment basin.
  - Areas less than 5 acres should drain to sediment control BMPs, such as a sediment trap, or a series of check dams. The total number of check dams used should be maximized to achieve the greatest amount of settlement of sediment prior to discharging from the site. Each check dam should be spaced evenly in the drainage channel through which stormwater flows are discharged off site.
- Performance of soil binders depends on temperature, humidity, and traffic across treated areas.

- Avoid over spray onto roads, sidewalks, drainage channels, existing vegetation, etc.
- Additional guidance on the comparison and selection of temporary slope stabilization methods is provided in Appendix F of the Handbook.

Selecting a Soil Binder

Properties of common soil binders used for erosion control are provided on Table 1 at the end of this Fact Sheet. Use Table 1 to select an appropriate soil binder. Refer to WE-1, Wind Erosion Control, for dust control soil binders.

Factors to consider when selecting a soil binder include the following:

- Suitability to situation - Consider where the soil binder will be applied, if it needs a high resistance to leaching or abrasion, and whether it needs to be compatible with any existing vegetation. Determine the length of time soil stabilization will be needed, and if the soil binder will be placed in an area where it will degrade rapidly. In general, slope steepness is not a discriminating factor for the listed soil binders.
- Soil types and surface materials - Fines and moisture content are key properties of surface materials. Consider a soil binder's ability to penetrate, likelihood of leaching, and ability to form a surface crust on the surface materials.
- Frequency of application - The frequency of application is related to the functional longevity of the binder, which can be affected by subgrade conditions, surface type, climate, and maintenance schedule.
- Frequent applications could lead to high costs. Application frequency may be minimized if the soil binder has good penetration, low evaporation, and good longevity. Consider also that frequent application will require frequent equipment clean up.

Plant-Material-Based (Short Lived, <6 months) Binders

Guar: Guar is a non-toxic, biodegradable, natural galactomannan-based hydrocolloid treated with dispersant agents for easy field mixing. It should be mixed with water at the rate of 11 to 15 lb per 1,000 gallons. Recommended minimum application rates are as follows:

Application Rates for Guar Soil Stabilizer

Slope (H:V):	Flat	4:1	3:1	2:1	1:1
lb/acre:	40	45	50	60	70

Psyllium: Psyllium is composed of the finely ground muciloid coating of plantago seeds that is applied as a dry powder or in a wet slurry to the surface of the soil. It dries to form a firm but rewettable membrane that binds soil particles together, but permits germination and growth of seed. Psyllium requires 12 to 18 hours drying time. Application rates should be from 80 to 200 lb/acre, with enough water in solution to allow for a uniform slurry flow.

Starch: Starch is non-ionic, cold water soluble (pre-gelatinized) granular cornstarch. The material is mixed with water and applied at the rate of 150 lb/acre. Approximate drying time is 9 to 12 hours.

Plant-Material-Based (Long Lived, 6-12 months) Binders

Pitch and Rosin Emulsion: Generally, a non-ionic pitch and rosin emulsion has a minimum solids content of 48%. The rosin should be a minimum of 26% of the total solids content. The soil stabilizer should be non-corrosive, water dilutable emulsion that upon application cures to a water insoluble binding and cementing agent. For soil erosion control applications, the emulsion is diluted and should be applied as follows:

- For clayey soil: 5 parts water to 1 part emulsion
- For sandy soil: 10 parts water to 1 part emulsion

Application can be by water truck or hydraulic seeder with the emulsion and product mixture applied at the rate specified by the manufacturer.

Polymeric Emulsion Blend Binders

Acrylic Copolymers and Polymers: Polymeric soil stabilizers should consist of a liquid or solid polymer or copolymer with an acrylic base that contains a minimum of 55% solids. The polymeric compound should be handled and mixed in a manner that will not cause foaming or should contain an anti-foaming agent. The polymeric emulsion should not exceed its shelf life or expiration date; manufacturers should provide the expiration date. Polymeric soil stabilizer should be readily miscible in water, non-injurious to seed or animal life, non-flammable, should provide surface soil stabilization for various soil types without totally inhibiting water infiltration, and should not re-emulsify when cured. The applied compound typically requires 12 to 24 hours drying time. Liquid copolymer should be diluted at a rate of 10 parts water to 1 part polymer and the mixture applied to soil at a rate of 1,175 gallons/acre.

Liquid Polymers of Methacrylates and Acrylates: This material consists of a tackifier/sealer that is a liquid polymer of methacrylates and acrylates. It is an aqueous 100% acrylic emulsion blend of 40% solids by volume that is free from styrene, acetate, vinyl, ethoxylated surfactants or silicates. For soil stabilization applications, it is diluted with water in accordance with the manufacturer's recommendations, and applied with a hydraulic seeder at the rate of 20 gallons/acre. Drying time is 12 to 18 hours after application.

Copolymers of Sodium Acrylates and Acrylamides: These materials are non-toxic, dry powders that are copolymers of sodium acrylate and acrylamide. They are mixed with water and applied to the soil surface for erosion control at rates that are determined by slope gradient:

Slope Gradient (H:V)	lb/acre
Flat to 5:1	3.0 – 5.0
5:1 to 3:1	5.0 – 10.0
2:1 to 1:1	10.0 – 20.0

Poly-Acrylamide (PAM) and Copolymer of Acrylamide**:** Linear copolymer polyacrylamide for use as a soil binder is packaged as a dry flowable solid, as a liquid. Refer to the manufacturer's recommendation for dilution and application rates as they vary based on liquid or dry form, site conditions and climate.

- Limitations specific to PAM are as follows:

- Do not use PAM on a slope that flows into a water body without passing through a sediment trap or sediment basin.
- The specific PAM copolymer formulation must be anionic. Cationic PAM should not be used in any application because of known aquatic toxicity problems. Only the highest drinking water grade PAM, certified for compliance with ANSI/NSF Standard 60 for drinking water treatment, should be used for soil applications.
- PAM designated for erosion and sediment control should be "water soluble" or "linear" or "non-cross linked".
- PAM should not be used as a stand-alone BMP to protect against water-based erosion. When combined with mulch, its effectiveness increases dramatically.

Hydro-Colloid Polymers: Hydro-Colloid Polymers are various combinations of dry flowable poly-acrylamides, copolymers and hydro-colloid polymers that are mixed with water and applied to the soil surface at rates of 55 to 60 lb/acre. Drying times are 0 to 4 hours.

Cementitious-Based Binders

Gypsum: This is a formulated gypsum based product that readily mixes with water and mulch to form a thin protective crust on the soil surface. It is composed of high purity gypsum that is ground, calcined and processed into calcium sulfate hemihydrate with a minimum purity of 86%. It is mixed in a hydraulic seeder and applied at rates 4,000 to 12,000 lb/acre. Drying time is 4 to 8 hours.

Applying Soil Binders

After selecting an appropriate soil binder, the untreated soil surface must be prepared before applying the soil binder. The untreated soil surface must contain sufficient moisture to assist the agent in achieving uniform distribution. In general, the following steps should be followed:

- Follow manufacturer's written recommendations for application rates, pre-wetting of application area, and cleaning of equipment after use.
- Prior to application, roughen embankment and fill areas.
- Consider the drying time for the selected soil binder and apply with sufficient time before anticipated rainfall. Soil binders should not be applied during or immediately before rainfall.
- Avoid over spray onto roads, sidewalks, drainage channels, sound walls, existing vegetation, etc.
- Soil binders should not be applied to frozen soil, areas with standing water, under freezing or rainy conditions, or when the temperature is below 40°F during the curing period.
- More than one treatment is often necessary, although the second treatment may be diluted or have a lower application rate.
- Generally, soil binders require a minimum curing time of 24 hours before they are fully effective. Refer to manufacturer's instructions for specific cure time.

- For liquid agents:
  - Crown or slope ground to avoid ponding.
  - Uniformly pre-wet ground at 0.03 to 0.3 gal/yd^2 or according to manufacturer's recommendations.
  - Apply solution under pressure. Overlap solution 6 to 12 in.
  - Allow treated area to cure for the time recommended by the manufacturer; typically at least 24 hours.
  - Apply second treatment before first treatment becomes ineffective, using 50% application rate.
  - In low humidities, reactivate chemicals by re-wetting with water at 0.1 to 0.2 gal/yd^2.

Costs

Costs vary according to the soil stabilizer selected for implementation. The following are approximate installed costs:

Soil Binder	Cost per Acre (2000)[1]	Estimated Cost per Acre (2009)[2]
Plant-Material-Based (Short Lived) Binders	$700-$900	$770-$990
Plant-Material-Based (Long Lived) Binders	$1,200-$1,500	$1,320-$1,650
Polymeric Emulsion Blend Binders	$700 -$1,500	$770-$1,650
Cementitious-Based Binders	$800-$1,200	$880-$1,350

1. Source: Erosion Control Pilot Study Report, Caltrans, June 2000.
2. 2009 costs reflect a 10% escalation over year 2000 costs. Escalation based on informal survey of industry trends. Note: Expected cost increase is offset by competitive economic conditions.

Inspection and Maintenance

- BMPs must be inspected in accordance with General Permit requirements for the associated project type and risk level. It is recommended that at a minimum, BMPs be inspected weekly, prior to forecasted rain events, daily during extended rain events, and after the conclusion of rain events.
- Areas where erosion is evident should be repaired and BMPs re-applied as soon as possible. Care should be exercised to minimize the damage to protected areas while making repairs, as any area damaged will require re-application of BMPs.
- Reapply the selected soil binder as needed to maintain effectiveness.

Table 1 Properties of Soil Binders for Erosion Control

Evaluation Criteria	Binder Type			
	Plant Material Based (Short Lived)	**Plant Material Based (Long Lived)**	**Polymeric Emulsion Blends**	**Cementitious-Based Binders**
Relative Cost	Low	Moderate to High	Low to High	Low to Moderate
Resistance to Leaching	High	High	Low to Moderate	Moderate
Resistance to Abrasion	Moderate	Low	Moderate to High	Moderate to High
Longevity	Short to Medium	Medium	Medium to Long	Medium
Minimum Curing Time before Rain	9 to 18 hours	19 to 24 hours	0 to 24 hours	4 to 8 hours
Compatibility with Existing Vegetation	Good	Poor	Poor	Poor
Mode of Degradation	Biodegradable	Biodegradable	Photodegradable/ Chemically Degradable	Photodegradable/ Chemically Degradable
Labor Intensive	No	No	No	No
Specialized Application Equipment	Water Truck or Hydraulic Mulcher	Water Truck or Hydraulic Mulcher	Water Truck or Hydraulic Mulcher	Water Truck or Hydraulic Mulcher
Liquid/Powder	Powder	Liquid	Liquid/Powder	Powder
Surface Crusting	Yes, but dissolves on rewetting	Yes	Yes, but dissolves on rewetting	Yes
Clean Up	Water	Water	Water	Water
Erosion Control Application Rate	Varies (1)	Varies (1)	Varies (1)	4,000 to 12,000 lbs/acre

(1) See Implementation for specific rates.

References

Erosion Control Pilot Study Report, State of California Department of Transportation (Caltrans), June 2000.

Manual of Standards of Erosion and Sediment Control Measures, Association of Bay Area Governments, May 1995.

Sedimentation and Erosion Control, An Inventory of Current Practices Draft, US EPA, April 1990.

Stormwater Quality Handbooks Construction Site Best Management Practices (BMPs) Manual, State of California Department of Transportation (Caltrans), March 2003.

Guidance Document: Soil Stabilization for Temporary Slopes, State of California Department of Transportation (Caltrans), November 1999.

Stormwater Management for Construction Activities, Developing Pollution Prevention Plans and Best Management Practices, EPA 832-R-92005; USEPA, April 1992.

Straw Mulch EC-6

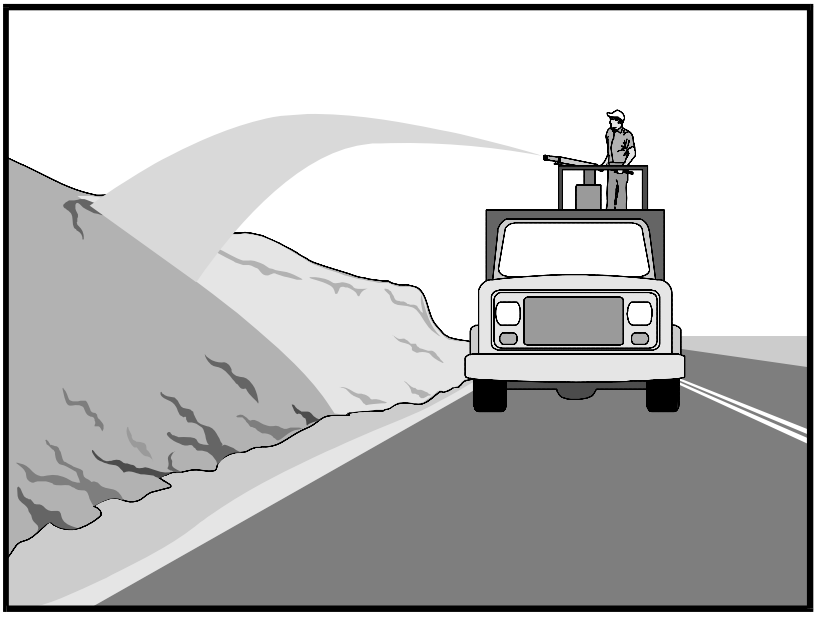

Categories

EC	Erosion Control	☑
SE	Sediment Control	
TC	Tracking Control	
WE	Wind Erosion Control	☒
NS	Non-Stormwater Management Control	
WM	Waste Management and Materials Pollution Control	

Legend:

☑ **Primary Category**

☒ **Secondary Category**

Targeted Constituents

Sediment	☑
Nutrients	
Trash	
Metals	
Bacteria	
Oil and Grease	
Organics	

Potential Alternatives

EC-3 Hydraulic Mulch

EC-4 Hydroseeding

EC-5 Soil Binders

EC-7 Geotextiles and Mats

EC-8 Wood Mulching

EC-14 Compost Blanket

Description and Purpose

Straw mulch consists of placing a uniform layer of straw and incorporating it into the soil with a studded roller or crimper, or anchoring it with a tackifier or stabilizing emulsion. Straw mulch protects the soil surface from the impact of rain drops, preventing soil particles from becoming dislodged.

Suitable Applications

Straw mulch is suitable for disturbed areas requiring temporary protection until permanent stabilization is established. Straw mulch can be specified for the following applications:

- As a stand-alone BMP on disturbed areas until soils can be prepared for permanent vegetation. The longevity of straw mulch is typically less than six months.
- Applied in combination with temporary seeding strategies
- Applied in combination with permanent seeding strategies to enhance plant establishment and final soil stabilization
- Applied around containerized plantings to control erosion until the plants become established to provide permanent stabilization

Limitations

- Availability of straw and straw blowing equipment may be limited just prior to the rainy season and prior to storms due to high demand.

- There is a potential for introduction of weed seed and unwanted plant material if weed-free agricultural straw is not specified.
- Straw mulch applied by hand is more time intensive and potentially costly.
- Wind may limit application of straw and blow straw into undesired locations.
- May have to be removed prior to permanent seeding or prior to further earthwork.
- "Punching" of straw does not work in sandy soils, necessitating the use of tackifiers.
- Potential fugitive dust control issues associated with straw applications can occur. Application of a stabilizing emulsion or a water stream at the same time straw is being blown can reduce this problem.
- Use of plastic netting should be avoided in areas where wildlife may be entrapped and may be prohibited for projects in certain areas with sensitive wildlife species, especially reptiles and amphibians.

Implementation

- Straw should be derived from weed-free wheat, rice, or barley. Where required by the plans, specifications, permits, or environmental documents, native grass straw should be used.
- Use tackifier to anchor straw mulch to the soil on slopes.
- Crimping, punch roller-type rollers, or track walking may also be used to incorporate straw mulch into the soil on slopes. Track walking can be used where other methods are impractical.
- Avoid placing straw onto roads, sidewalks, drainage channels, sound walls, existing vegetation, etc.
- Straw mulch with tackifier should not be applied during or immediately before rainfall.
- Additional guidance on the comparison and selection of temporary slope stabilization methods is provided in Appendix F of the Handbook.

Application Procedures

- When using a tackifier to anchor the straw mulch, roughen embankment or fill areas by rolling with a crimping or punching-type roller or by track walking before placing the straw mulch. Track walking should only be used where rolling is impractical.
- Apply straw at a rate of between 3,000 and 4,000 lb/acre, either by machine or by hand distribution and provide 100% ground cover. A lighter application is used for flat surfaces and a heavier application is used for slopes.
- Evenly distribute straw mulch on the soil surface.
- Anchoring straw mulch to the soil surface by "punching" it into the soil mechanically (incorporating) can be used in lieu of a tackifier.

- Methods for holding the straw mulch in place depend upon the slope steepness, accessibility, soil conditions, and longevity.
  - A tackifier acts to glue the straw fibers together and to the soil surface. The tackifier should be selected based on longevity and ability to hold the fibers in place. A tackifier is typically applied at a rate of 125 lb/acre. In windy conditions, the rates are typically 180 lb/acre.
  - On very small areas, a spade or shovel can be used to punch in straw mulch.
  - On slopes with soils that are stable enough and of sufficient gradient to safely support construction equipment without contributing to compaction and instability problems, straw can be "punched" into the ground using a knife blade roller or a straight bladed coulter, known commercially as a "crimper."

Costs

Average annual cost for installation and maintenance is included in the table below. Application by hand is more time intensive and potentially more costly.

BMP	Unit Cost per Acre
Straw mulch, crimped or punched	$2,458-$5,375
Straw mulch with tackifier	$1,823-$4,802

Source: Caltrans Soil Stabilization BMP Research for Erosion and Sediment Controls, July 2007

Inspection and Maintenance

- BMPs must be inspected in accordance with General Permit requirements for the associated project type and risk level. It is recommended that at a minimum, BMPs be inspected weekly, prior to forecasted rain events, daily during extended rain events, and after the conclusion of rain events.
- Areas where erosion is evident should be repaired and BMPs re-applied as soon as possible. Care should be exercised to minimize the damage to protected areas while making repairs, as any area damaged will require re-application of BMPs.
- The key consideration in inspection and maintenance is that the straw needs to last long enough to achieve erosion control objectives. Straw mulch as a stand-alone BMP is temporary and is not suited for long-term erosion control.
- Maintain an unbroken, temporary mulched ground cover while disturbed soil areas are inactive. Repair any damaged ground cover and re-mulch exposed areas.
- Reapplication of straw mulch and tackifier may be required to maintain effective soil stabilization over disturbed areas and slopes.

References

Soil Stabilization BMP Research for Erosion and Sediment Controls: Cost Survey Technical Memorandum, State of California Department of Transportation (Caltrans), July 2007.

Erosion and Sediment Control Manual, Oregon Department of Environmental Quality, February 2005.

Controlling Erosion of Construction Sites, Agricultural Information Bulletin #347, U.S. Department of Agriculture (USDA), Natural Resources Conservation Service (NRCS) (formerly Soil Conservation Service – SCS).

Guides for Erosion and Sediment Control in California, USDA Soils Conservation Service, January 1991.

Manual of Standards of Erosion and Sediment Control Measures, Association of Bay Area Governments, May 1995.

Soil Erosion by Water, Agricultural Information Bulletin #513, U.S. Department of Agriculture, Soil Conservation Service.

Stormwater Quality Handbooks Construction Site Best Management Practices (BMPs) Manual, State of California Department of Transportation (Caltrans), March 2003.

Stormwater Management of the Puget Sound Basin, Technical Manual, Publication #91-75, Washington State Department of Ecology, February 1992.

Water Quality Management Plan for the Lake Tahoe Region, Volume II, Handbook of Management Practices, Tahoe Regional Planning Agency, November 1988.

Geotextiles and Mats EC-7

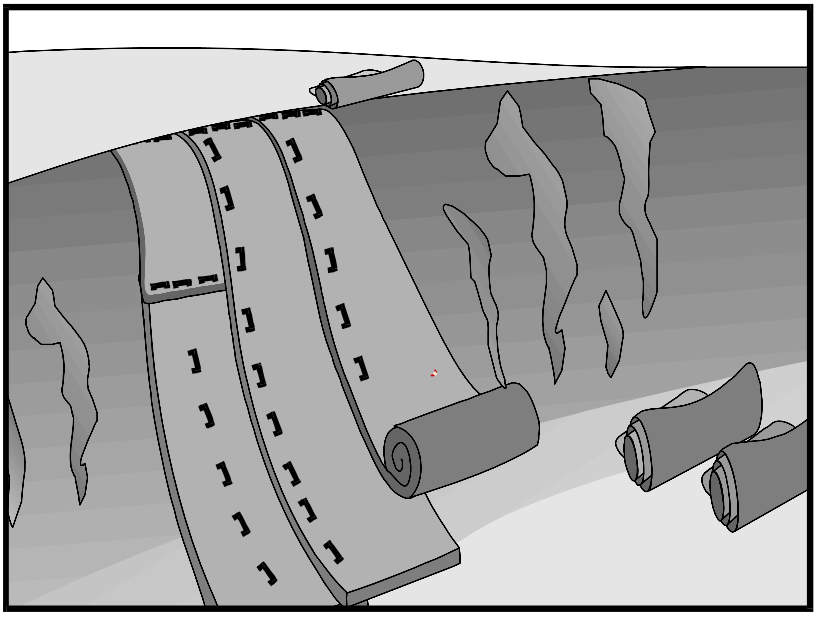

Categories

EC	Erosion Control	☑
SE	Sediment Control	
TC	Tracking Control	
WE	Wind Erosion Control	☒
NS	Non-Stormwater Management Control	
WM	Waste Management and Materials Pollution Control	

Legend:

☑ **Primary Category**

☒ **Secondary Category**

Targeted Constituents

Sediment	☑
Nutrients	
Trash	
Metals	
Bacteria	
Oil and Grease	
Organics	

Potential Alternatives

EC-3 Hydraulic Mulch

EC-4 Hydroseeding

Description and Purpose

Mattings, or Rolled Erosion Control Products (RECPs), can be made of natural or synthetic materials or a combination of the two. RECPs are used to cover the soil surface to reduce erosion from rainfall impact, hold soil in place, and absorb and hold moisture near the soil surface. Additionally, RECPs may be used to stabilize soils until vegetation is established or to reinforce non-woody surface vegetation.

Suitable Applications

RECPs are typically applied on slopes where erosion hazard is high and vegetation will be slow to establish. Mattings are also used on stream banks, swales and other drainage channels where moving water at velocities between 3 ft/s and 6 ft/s are likely to cause scour and wash out new vegetation, and in areas where the soil surface is disturbed and where existing vegetation has been removed. RECPs may also be used when seeding cannot occur (e.g., late season construction and/or the arrival of an early rain season). RECPs should be considered when the soils are fine grained and potentially erosive. RECPs should be considered in the following situations.

- Steep slopes, generally steeper than 3:1 (H:V)
- Slopes where the erosion potential is high
- Slopes and disturbed soils where mulch must be anchored
- Disturbed areas where plants are slow to develop

- Channels with flows exceeding 3.3 ft/s
- Channels to be vegetated
- Stockpiles
- Slopes adjacent to water bodies

Limitations

- RECP installed costs are generally higher than other erosion control BMPs, limiting their use to areas where other BMPs are ineffective (e.g. channels, steep slopes).
- RECPs may delay seed germination, due to reduction in soil temperature.
- RECPs are generally not suitable for excessively rocky sites or areas where the final vegetation will be mowed (since staples and netting can catch in mowers). If a staple or pin cannot be driven into the soil because the underlying soil is too hard or rocky, then an alternative BMP should be selected.
- If used for temporary erosion control, RECPs should be removed and disposed of prior to application of permanent soil stabilization measures.
- The use of plastic should be limited to covering stockpiles or very small graded areas for short periods of time (such as through one imminent storm event) until more environmentally friendly measures, such as seeding and mulching, may be installed.
    - Plastic sheeting is easily vandalized, easily torn, photodegradable, and must be disposed of at a landfill.
    - Plastic sheeting results in 100% runoff, which may cause serious erosion problems in the areas receiving the increased flow.
- RECPs may have limitations based on soil type, slope gradient, or channel flow rate; consult the manufacturer for proper selection.
- Not suitable for areas that have foot traffic (tripping hazard) – e.g., pad areas around buildings under construction.
- RECPs that incorporate a plastic netting (e.g. straw blanket typically uses a plastic netting to hold the straw in place) may not be suitable near known wildlife habitat. Wildlife can become trapped in the plastic netting.
- RECPs may have limitations in extremely windy climates. However, when RECPs are properly trenched at the top and bottom and stapled in accordance with the manufacturer's recommendations, problems with wind can be minimized.

Implementation
Material Selection

- Natural RECPs have been found to be effective where re-vegetation will be provided by re-seeding. The choice of material should be based on the size of area, side slopes, surface conditions such as hardness, moisture, weed growth, and availability of materials.

- Additional guidance on the comparison and selection of temporary slope stabilization methods is provided in Appendix F of the Handbook.

- The following natural and synthetic RECPs are commonly used:

Geotextiles

- Material can be a woven or a non-woven polypropylene fabric with minimum thickness of 0.06 in., minimum width of 12 ft and should have minimum tensile strength of 150 lbs (warp), 80 lbs (fill) in conformance with the requirements in ASTM Designation: D 4632. The permittivity of the fabric should be approximately 0.07 sec^{-1} in conformance with the requirements in ASTM Designation: D4491. The fabric should have an ultraviolet (UV) stability of 70 percent in conformance with the requirements in ASTM designation: D4355. Geotextile blankets must be secured in place with wire staples or sandbags and by keying into tops of slopes to prevent infiltration of surface waters under geotextile. Staples should be made of minimum 11 gauge steel wire and should be U-shaped with 8 in. legs and 2 in. crown.

- Geotextiles may be reused if they are suitable for the use intended.

Plastic Covers

- Generally plastic sheeting should only be used as stockpile covering or for very small graded areas for short periods of time (such as through one imminent storm event). If plastic sheeting must be used, choose a plastic that will withstand photo degradation.

- Plastic sheeting should have a minimum thickness of 6 mils, and must be keyed in at the top of slope (when used as a temporary slope protection) and firmly held in place with sandbags or other weights placed no more than 10 ft apart. Seams are typically taped or weighted down their entire length, and there should be at least a 12 in. to 24 in. overlap of all seams. Edges should be embedded a minimum of 6 in. in soil (when used as a temporary slope protection).

- All sheeting must be inspected periodically after installation and after significant rainstorms to check for erosion, undermining, and anchorage failure. Any failures must be repaired immediately. If washout or breakages occur, the material should be re-installed after repairing the damage to the slope.

Erosion Control Blankets/Mats

- Biodegradable RECPs are typically composed of jute fibers, curled wood fibers, straw, coconut fiber, or a combination of these materials. In order for an RECP to be considered 100% biodegradable, the netting, sewing or adhesive system that holds the biodegradable mulch fibers together must also be biodegradable. See typical installation details at the end of this fact sheet.

- **Jute** is a natural fiber that is made into a yarn that is loosely woven into a biodegradable mesh. The performance of jute as a stand-alone RECP is low. Most other RECPs outperform jute as a temporary erosion control product and therefore jute is not commonly used. It is designed to be used in conjunction with vegetation. The material is supplied in rolled strips, which should be secured to the soil with U-shaped staples or stakes in accordance with manufacturers' recommendations.

- **Excelsior** (curled wood fiber) blanket material should consist of machine produced mats of curled wood excelsior with 80 percent of the fiber 6 in. or longer. The excelsior blanket should be of consistent thickness. The wood fiber must be evenly distributed over the entire area of the blanket. The top surface of the blanket should be covered with a photodegradable extruded plastic mesh. The blanket should be smolder resistant without the use of chemical additives and should be non-toxic and non-injurious to plant and animal life. Excelsior blankets should be furnished in rolled strips, a minimum of 48 in. wide, and should have an average weight of 0.8 lb/yd^2, ±10 percent, at the time of manufacture. Excelsior blankets must be secured in place with wire staples. Staples should be made of minimum 11 gauge steel wire and should be U-shaped with 8 in. legs and 2 in. crown.

- **Straw blanket** should be machine produced mats of straw with a lightweight biodegradable netting top layer. The straw should be attached to the netting with biodegradable thread or glue strips. The straw blanket should be of consistent thickness. The straw should be evenly distributed over the entire area of the blanket. Straw blanket should be furnished in rolled strips a minimum of 6.5 ft wide, a minimum of 80 ft long and a minimum of 0.5 lb/yd^2. Straw blankets must be secured in place with wire staples. Staples should be made of minimum 11 gauge steel wire and should be U-shaped with 8 in. legs and 2 in. crown.

- **Wood fiber blanket** is composed of biodegradable fiber mulch with extruded plastic netting held together with adhesives. The material is designed to enhance re-vegetation. The material is furnished in rolled strips, which must be secured to the ground with U-shaped staples or stakes in accordance with manufacturers' recommendations.

- **Coconut fiber blanket** should be a machine produced mat of 100 percent coconut fiber with biodegradable netting on the top and bottom. The coconut fiber should be attached to the netting with biodegradable thread or glue strips. The coconut fiber blanket should be of consistent thickness. The coconut fiber should be evenly distributed over the entire area of the blanket. Coconut fiber blanket should be furnished in rolled strips with a minimum of 6.5 ft wide, a minimum of 80 ft. long and a minimum of 0.5 lb/yd^2. Coconut fiber blankets must be secured in place with wire staples. Staples should be made of minimum 11 gauge steel wire and should be U-shaped with 8 in. legs and 2 in. crown.

- **Coconut fiber mesh** is a thin permeable membrane made from coconut or corn fiber that is spun into a yarn and woven into a biodegradable mat. It is designed to be used in conjunction with vegetation and typically has longevity of several years. The material is supplied in rolled strips, which must be secured to the soil with U-shaped staples or stakes in accordance with manufacturers' recommendations.

- **Straw coconut fiber blanket** should be machine produced mats of 70 percent straw and 30 percent coconut fiber with a biodegradable netting top layer and a biodegradable bottom net. The straw and coconut fiber should be attached to the netting with biodegradable thread or glue strips. The straw coconut fiber blanket should be of consistent thickness. The straw and coconut fiber should be evenly distributed over the entire area of the blanket. Straw coconut fiber blanket should be furnished in rolled strips a minimum of 6.5 ft wide, a minimum of 80 ft long and a minimum of 0.5 lb/yd^2. Straw coconut fiber blankets must be secured in place with wire staples. Staples should be made of minimum 11 gauge steel wire and should be U-shaped with 8 in. legs and 2 in. crown.

- Non-biodegradable RECPs are typically composed of polypropylene, polyethylene, nylon or other synthetic fibers. In some cases, a combination of biodegradable and synthetic fibers is used to construct the RECP. Netting used to hold these fibers together is typically non-biodegradable as well.

  - **Plastic netting** is a lightweight biaxially oriented netting designed for securing loose mulches like straw or paper to soil surfaces to establish vegetation. The netting is photodegradable. The netting is supplied in rolled strips, which must be secured with U-shaped staples or stakes in accordance with manufacturers' recommendations.

  - **Plastic mesh** is an open weave geotextile that is composed of an extruded synthetic fiber woven into a mesh with an opening size of less than ¼ in. It is used with re-vegetation or may be used to secure loose fiber such as straw to the ground. The material is supplied in rolled strips, which must be secured to the soil with U-shaped staples or stakes in accordance with manufacturers' recommendations.

  - **Synthetic fiber with netting** is a mat that is composed of durable synthetic fibers treated to resist chemicals and ultraviolet light. The mat is a dense, three dimensional mesh of synthetic (typically polyolefin) fibers stitched between two polypropylene nets. The mats are designed to be re-vegetated and provide a permanent composite system of soil, roots, and geomatrix. The material is furnished in rolled strips, which must be secured with U-shaped staples or stakes in accordance with manufacturers' recommendations.

  - **Bonded synthetic fibers** consist of a three dimensional geomatrix nylon (or other synthetic) matting. Typically it has more than 90 percent open area, which facilitates root growth. It's tough root reinforcing system anchors vegetation and protects against hydraulic lift and shear forces created by high volume discharges. It can be installed over prepared soil, followed by seeding into the mat. Once vegetated, it becomes an invisible composite system of soil, roots, and geomatrix. The material is furnished in rolled strips that must be secured with U-shaped staples or stakes in accordance with manufacturers' recommendations.

  - **Combination synthetic and biodegradable RECPs** consist of biodegradable fibers, such as wood fiber or coconut fiber, with a heavy polypropylene net stitched to the top and a high strength continuous filament geomatrix or net stitched to the bottom. The material is designed to enhance re-vegetation. The material is furnished in rolled strips,

which must be secured with U-shaped staples or stakes in accordance with manufacturers' recommendations.

Site Preparation

- Proper soil preparation is essential to ensure complete contact of the RECP with the soil. Soil Roughening is not recommended in areas where RECPs will be installed.
- Grade and shape the area of installation.
- Remove all rocks, clods, vegetation or other obstructions so that the installed blankets or mats will have complete, direct contact with the soil.
- Prepare seedbed by loosening 2 to 3 in. of topsoil.

Seeding/Planting

Seed the area before blanket installation for erosion control and re-vegetation. Seeding after mat installation is often specified for turf reinforcement application. When seeding prior to blanket installation, all areas disturbed during blanket installation must be re-seeded. Where soil filling is specified for turf reinforcement mats (TRMs), seed the matting and the entire disturbed area after installation and prior to filling the mat with soil.

Fertilize and seed in accordance with seeding specifications or other types of landscaping plans. The protective matting can be laid over areas where grass has been planted and the seedlings have emerged. Where vines or other ground covers are to be planted, lay the protective matting first and then plant through matting according to design of planting.

Check Slots

Check slots shall be installed as required by the manufacturer.

Laying and Securing Matting

- Before laying the matting, all check slots should be installed and the seedbed should be friable, made free from clods, rocks, and roots. The surface should be compacted and finished according to the requirements of the manufacturer's recommendations.
- Mechanical or manual lay down equipment should be capable of handling full rolls of fabric and laying the fabric smoothly without wrinkles or folds. The equipment should meet the fabric manufacturer's recommendations or equivalent standards.

Anchoring

- U-shaped wire staples, metal geotextile stake pins, or triangular wooden stakes can be used to anchor mats and blankets to the ground surface.
- Wire staples should be made of minimum 11 gauge steel wire and should be U-shaped with 8 in. legs and 2 in. crown.
- Metal stake pins should be 0.188 in. diameter steel with a 1.5 in. steel washer at the head of the pin, and 8 in. in length.
- Wire staples and metal stakes should be driven flush to the soil surface.

Installation on Slopes

Installation should be in accordance with the manufacturer's recommendations. In general, these will be as follows:

- Begin at the top of the slope and anchor the blanket in a 6 in. deep by 6 in. wide trench. Backfill trench and tamp earth firmly.
- Unroll blanket down slope in the direction of water flow.
- Overlap the edges of adjacent parallel rolls 2 to 3 in. and staple every 3 ft (or greater, per manufacturer's specifications).
- When blankets must be spliced, place blankets end over end (shingle style) with 6 in. overlap. Staple through overlapped area, approximately 12 in. apart.
- Lay blankets loosely and maintain direct contact with the soil. Do not stretch.
- Staple blankets sufficiently to anchor blanket and maintain contact with the soil. Staples should be placed down the center and staggered with the staples placed along the edges. Steep slopes, 1:1 (H:V) to 2:1 (H:V), require a minimum of 2 staples/yd^2. Moderate slopes, 2:1 (H:V) to 3:1 (H:V), require a minimum of 1 ½ staples/yd^2. Check manufacturer's specifications to determine if a higher density staple pattern is required.

Installation in Channels

Installation should be in accordance with the manufacturer's recommendations. In general, these will be as follows:

- Dig initial anchor trench 12 in. deep and 6 in. wide across the channel at the lower end of the project area.
- Excavate intermittent check slots, 6 in. deep and 6 in. wide across the channel at 25 to 30 ft intervals along the channels.
- Cut longitudinal channel anchor trenches 4 in. deep and 4 in. wide along each side of the installation to bury edges of matting, whenever possible extend matting 2 to 3 in. above the crest of the channel side slopes.
- Beginning at the downstream end and in the center of the channel, place the initial end of the first roll in the anchor trench and secure with fastening devices at 12 in. intervals. Note: matting will initially be upside down in anchor trench.
- In the same manner, position adjacent rolls in anchor trench, overlapping the preceding roll a minimum of 3 in.
- Secure these initial ends of mats with anchors at 12 in. intervals, backfill and compact soil.
- Unroll center strip of matting upstream. Stop at next check slot or terminal anchor trench. Unroll adjacent mats upstream in similar fashion, maintaining a 3 in. overlap.

- Fold and secure all rolls of matting snugly into all transverse check slots. Lay mat in the bottom of the slot then fold back against itself. Anchor through both layers of mat at 12 in. intervals, then backfill and compact soil. Continue rolling all mat widths upstream to the next check slot or terminal anchor trench.
- Alternate method for non-critical installations: Place two rows of anchors on 6 in. centers at 25 to 30 ft. intervals in lieu of excavated check slots.
- Staple shingled lap spliced ends a minimum of 12 in. apart on 12 in. intervals.
- Place edges of outside mats in previously excavated longitudinal slots; anchor using prescribed staple pattern, backfill, and compact soil.
- Anchor, fill, and compact upstream end of mat in a 12 in. by 6 in. terminal trench.
- Secure mat to ground surface using U-shaped wire staples, geotextile pins, or wooden stakes.
- Seed and fill turf reinforcement matting with soil, if specified.

Soil Filling (if specified for turf reinforcement mat (TRM))

Installation should be in accordance with the manufacturer's recommendations. Typical installation guidelines are as follows:

- After seeding, spread and lightly rake ½-3/4 inches of fine topsoil into the TRM apertures to completely fill TRM thickness. Use backside of rake or other flat implement.
- Alternatively, if allowed by product specifications, spread topsoil using lightweight loader, backhoe, or other power equipment. Avoid sharp turns with equipment.
- Always consult the manufacturer's recommendations for installation.
- Do not drive tracked or heavy equipment over mat.
- Avoid any traffic over matting if loose or wet soil conditions exist.
- Use shovels, rakes, or brooms for fine grading and touch up.
- Smooth out soil filling just exposing top netting of mat.

Temporary Soil Stabilization Removal

- Temporary soil stabilization removed from the site of the work must be disposed of if necessary.

Costs

Installed costs can be relatively high compared to other BMPs. Approximate costs for installed materials are shown below:

Rolled Erosion Control Products		Installed Cost per Acre (2000)[1]	Estimated Cost per Acre (2009)[2]
Biodegradable	Jute Mesh	$6,000-$7,000	$6,600-$7,700
	Curled Wood Fiber	$8,000-$10,500	$8,800-$11,050
	Straw	$8,000-$10,500	$8,800-$11,050
	Wood Fiber	$8,000-$10,500	$8,800-$11,050
	Coconut Fiber	$13,000-$14,000	$14,300-$15,400
	Coconut Fiber Mesh	$30,000-$33,000	$33,000-$36,300
	Straw Coconut Fiber	$10,000-$12,000	$11,000-$13,200
Non-Biodegradable	Plastic Netting	$2,000-$2,200	$2,200-$2,220
	Plastic Mesh	$3,000-$3,500	$3,300-$3,850
	Synthetic Fiber with Netting	$34,000-$40,000	$37,400-$44,000
	Bonded Synthetic Fibers	$45,000-$55,000	$49,500-$60,500
	Combination with Biodegradable	$30,000-$36,000	$33,000-$39,600

1. Source: Erosion Control Pilot Study Report, Caltrans, June 2000.
2. 2009 costs reflect a 10% escalation over year 2000 costs. Escalation based on informal survey of industry trends. Note: Expected cost increase is offset by competitive economic conditions.

Inspection and Maintenance

- RECPs must be inspected in accordance with General Permit requirements for the associated project type and risk level. It is recommended that at a minimum, BMPs be inspected weekly, prior to forecasted rain events, daily during extended rain events, and after the conclusion of rain events.
- Areas where erosion is evident shall be repaired and BMPs reapplied as soon as possible. Care should be exercised to minimize the damage to protected areas while making repairs, as any area damaged will require reapplication of BMPs.
- If washout or breakage occurs, re-install the material after repairing the damage to the slope or channel.
- Make sure matting is uniformly in contact with the soil.
- Check that all the lap joints are secure.
- Check that staples are flush with the ground.

References

Erosion and Sediment Control Manual, Oregon Department of Environmental Quality, February 2005

Erosion Control Pilot Study Report, State of California Department of Transportation (Caltrans), June 2000.

Guides for Erosion and Sediment Controls in California, USDA Soils Conservation Service, January 1991.

National Management Measures to Control Nonpoint Source Pollution from Urban Areas, United States Environmental Protection Agency, 2002.

Stormwater Quality Handbooks Construction Site Best Management Practices (BMPs) Manual, State of California Department of Transportation (Caltrans), March 2003.

Guidance Document: Soil Stabilization for Temporary Slopes, State of California Department of Transportation (Caltrans), November 1999.

Stormwater Management of the Puget Sound Basin, Technical Manual, Publication #91-75, Washington State Department of Ecology, February 1992.

Water Quality Management Plan for The Lake Tahoe Region, Volume II, Handbook of Management Practices, Tahoe Regional Planning Agency, November 1988.

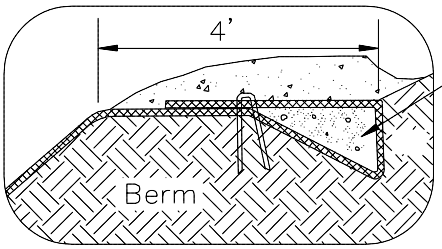

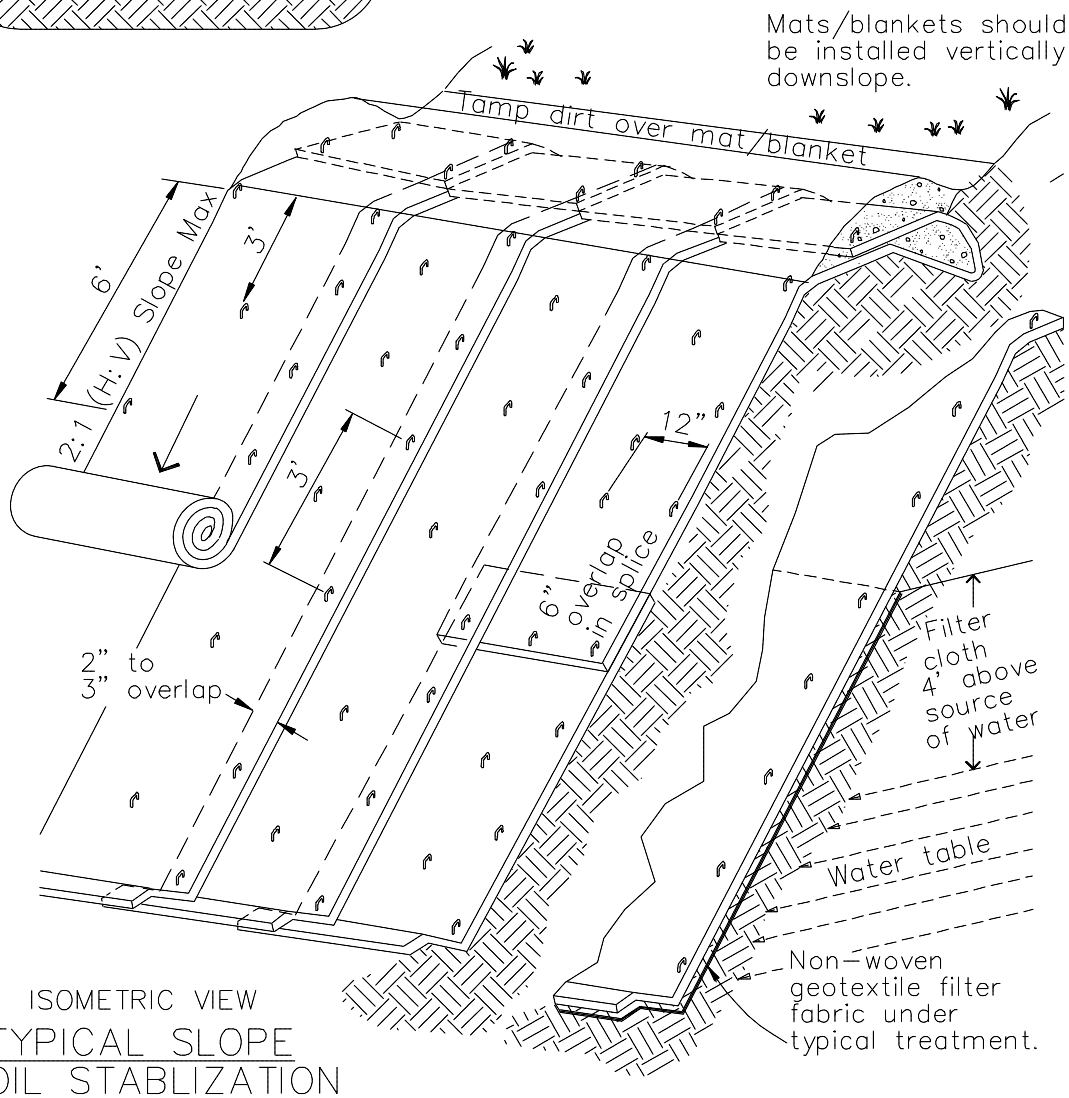

ISOMETRIC VIEW

TYPICAL SLOPE SOIL STABLIZATION

NTS

WET SLOPE LINING

NTS

NOTES:

1. Slope surface shall be free of rocks, clods, sticks and grass. Mats/blankets shall have good soil contact.
2. Lay blankets loosely and stake or staple to maintain direct contact with the soil. Do not stretch.
3. Install per manufacturer's recommendations

TYPICAL INSTALLATION DETAIL

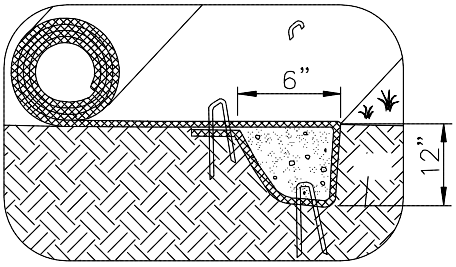

INITIAL CHANNEL ANCHOR TRENCH
NTS

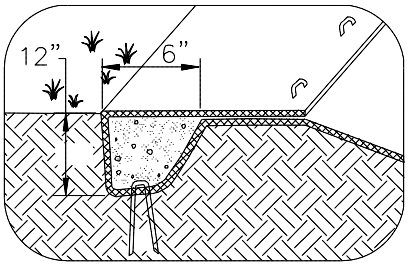

TERMINAL SLOPE AND CHANNEL ANCHOR TRENCH
NTS

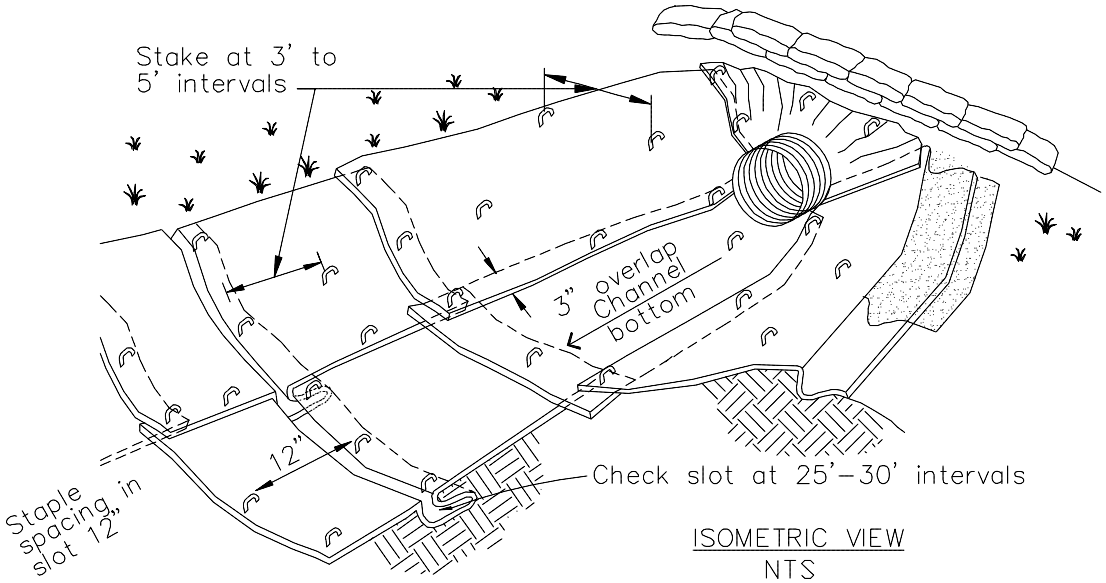

ISOMETRIC VIEW
NTS

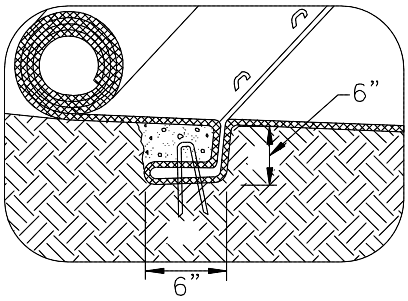

INTERMITTENT CHECK SLOT
NTS

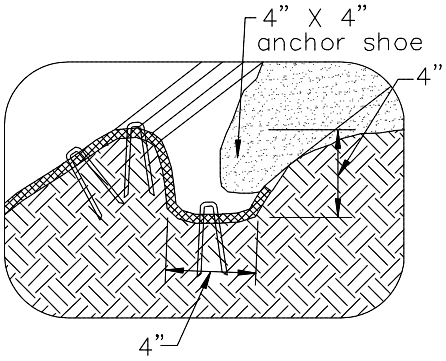

LONGITUDINAL ANCHOR TRENCH
NTS

NOTES:

1. Check slots to be constructed per manufacturers specifications.
2. Staking or stapling layout per manufacturers specifications.
3. Install per manufacturer's recommendations

TYPICAL INSTALLATION DETAIL

Wood Mulching EC-8

Categories

EC	Erosion Control	☑
SE	Sediment Control	
TC	Tracking Control	
WE	Wind Erosion Control	☒
NS	Non-Stormwater Management Control	
WM	Waste Management and Materials Pollution Control	

Legend:

☑ **Primary Objective**

☒ **Secondary Objective**

Targeted Constituents

Sediment	☑
Nutrients	
Trash	
Metals	
Bacteria	
Oil and Grease	
Organics	

Potential Alternatives

EC-3 Hydraulic Mulch

EC-4 Hydroseeding

EC-5 Soil Binders

EC-6 Straw Mulch

EC-7 Geotextiles and Mats

Description and Purpose

Wood mulching consists of applying a mixture of shredded wood mulch, bark or compost to disturbed soils. The primary function of wood mulching is to reduce erosion by protecting bare soil from rainfall impact, increasing infiltration, and reducing runoff.

Suitable Applications

Wood mulching is suitable for disturbed soil areas requiring temporary protection until permanent stabilization is established.

Limitations

- Not suitable for use on slopes steeper than 3:1 (H:V). Best suited to flat areas or gentle slopes or 5:1 (H:V) or flatter.
- Wood mulch and compost may introduce unwanted species.
- Not suitable for areas exposed to concentrated flows.
- May need to be removed prior to further earthwork.

Implementation

Mulch Selection

There are many types of mulches. Selection of the appropriate type of mulch should be based on the type of application, site conditions, and compatibility with planned or future uses.

Application Procedures

Prior to application, after existing vegetation has been

removed, roughen embankment and fill areas by rolling with a device such as a punching type roller or by track walking. The construction application procedures for mulches vary significantly depending upon the type of mulching method specified. Two methods are highlighted here:

- Green Material: This type of mulch is produced by the recycling of vegetation trimmings such as grass, shredded shrubs, and trees. Methods of application are generally by hand although pneumatic methods are available.
  - Green material can be used as a temporary ground cover with or without seeding.
  - The green material should be evenly distributed on site to a depth of not more than 2 in.
- Shredded Wood: Suitable for ground cover in ornamental or revegetated plantings.
  - Shredded wood/bark is conditionally suitable. See note under limitations.
  - Distribute by hand or use pneumatic methods.
  - Evenly distribute the mulch across the soil surface to a depth of 2 to 3 in.
- Avoid mulch placement onto roads, sidewalks, drainage channels, existing vegetation, etc.

Costs

Average annual cost for installation and maintenance (3-4 months useful life) is around $4,000 per acre, but cost can increase if the source is not close to the project site.

Inspection and Maintenance

- Inspect BMPs prior to forecast rain, daily during extended rain events, after rain events, weekly during the rainy season, and at two-week intervals during the non-rainy season.
- Areas where erosion is evident shall be repaired and BMPs reapplied as soon as possible. Care should be exercised to minimize the damage to protected areas while making repairs, as any area damaged will require reapplication of BMPs.
- Regardless of the mulching technique selected, the key consideration in inspection and maintenance is that the mulch needs to last long enough to achieve erosion control objectives. If the mulch is applied as a stand alone erosion control method over disturbed areas (without seed), it should last the length of time the site will remain barren or until final re-grading and revegetation.
- Where vegetation is not the ultimate cover, such as ornamental and landscape applications of bark or wood chips, inspection and maintenance should focus on longevity and integrity of the mulch.
- Reapply mulch when bare earth becomes visible.

References

Controlling Erosion of Construction Sites Agriculture Information Bulletin #347, U.S. Department of Agriculture (USDA), Natural Resources Conservation Service (NRCS) (formerly Soil Conservation Service – SCS).

Guides for Erosion and Sediment Control in California, USDA Soils Conservation Service, January 1991.

Manual of Standards of Erosion and Sediment Control Measures, Association of Bay Area Governments, May 1995.

Proposed Guidance Specifying Management Measures for Sources of Nonpoint Pollution in Coastal Waters, Work Group Working Paper, USEPA, April 1992.

Sedimentation and Erosion Control, An Inventory of Current Practices Draft, U.S. EPA, April 1990.

Soil Erosion by Water Agricultural Information Bulletin #513, U.S. Department of Agriculture, Soil Conservation Service.

Stormwater Quality Handbooks Construction Site Best Management Practices (BMPs) Manual, State of California Department of Transportation (Caltrans), November 2000.

Water Quality Management Plan for the Lake Tahoe Region, Volume II, Handbook of Management Practices, Tahoe Regional Planning Agency, November 1988.

Earth Dikes and Drainage Swales EC-9

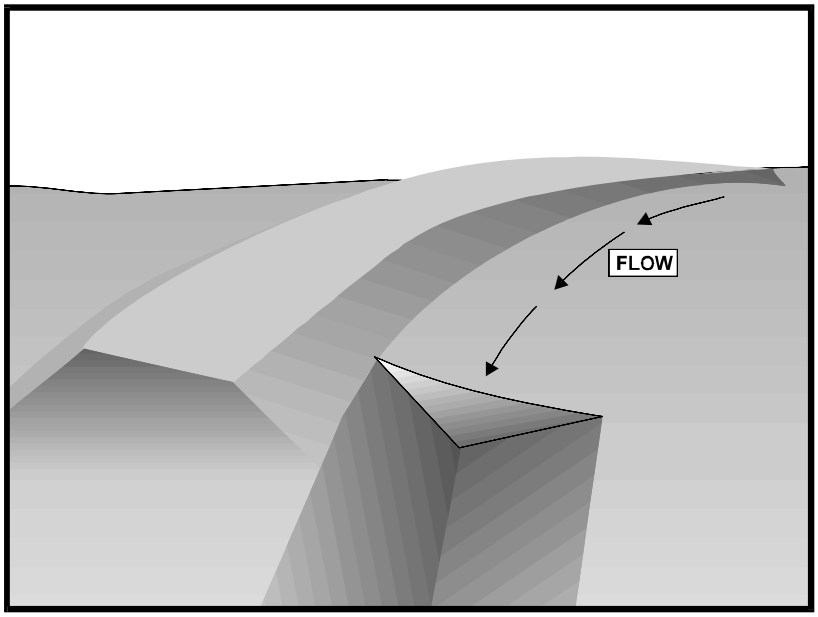

Categories

EC	Erosion Control	☑
SE	Sediment Control	
TC	Tracking Control	
WE	Wind Erosion Control	
NS	Non-Stormwater Management Control	
WM	Waste Management and Materials Pollution Control	

Legend:

☑ **Primary Objective**

☒ **Secondary Objective**

Targeted Constituents

Sediment	☑
Nutrients	
Trash	
Metals	
Bacteria	
Oil and Grease	
Organics	

Potential Alternatives

None

Description and Purpose

An earth dike is a temporary berm or ridge of compacted soil used to divert runoff or channel water to a desired location. A drainage swale is a shaped and sloped depression in the soil surface used to convey runoff to a desired location. Earth dikes and drainage swales are used to divert off site runoff around the construction site, divert runoff from stabilized areas and disturbed areas, and direct runoff into sediment basins or traps.

Suitable Applications

Earth dikes and drainage swales are suitable for use, individually or together, where runoff needs to be diverted from one area and conveyed to another.

- Earth dikes and drainage swales may be used:
  - To convey surface runoff down sloping land
  - To intercept and divert runoff to avoid sheet flow over sloped surfaces
  - To divert and direct runoff towards a stabilized watercourse, drainage pipe or channel
  - To intercept runoff from paved surfaces
  - Below steep grades where runoff begins to concentrate
  - Along roadways and facility improvements subject to flood drainage

- At the top of slopes to divert runon from adjacent or undisturbed slopes
- At bottom and mid slope locations to intercept sheet flow and convey concentrated flows
- Divert sediment laden runoff into sediment basins or traps

Limitations

Dikes should not be used for drainage areas greater than 10 acres or along slopes greater than 10 percent. For larger areas more permanent drainage structures should be built. All drainage structures should be built in compliance with local municipal requirements.

- Earth dikes may create more disturbed area on site and become barriers to construction equipment.
- Earth dikes must be stabilized immediately, which adds cost and maintenance concerns.
- Diverted stormwater may cause downstream flood damage.
- Dikes should not be constructed of soils that may be easily eroded.
- Regrading the site to remove the dike may add additional cost.
- Temporary drains and swales or any other diversion of runoff should not adversely impact upstream or downstream properties.
- Temporary drains and swales must conform to local floodplain management requirements.
- Earth dikes/drainage swales are not suitable as sediment trapping devices.
- It may be necessary to use other soil stabilization and sediment controls such as check dams, plastics, and blankets, to prevent scour and erosion in newly graded dikes, swales, and ditches.
- Sediment accumulation, scour depressions, and/or persistent non-stormwater discharges can result in areas of standing water suitable for mosquito production in drainage swales.

Implementation

The temporary earth dike is a berm or ridge of compacted soil, located in such a manner as to divert stormwater to a sediment trapping device or a stabilized outlet, thereby reducing the potential for erosion and offsite sedimentation. Earth dikes can also be used to divert runoff from off site and from undisturbed areas away from disturbed areas and to divert sheet flows away from unprotected slopes.

An earth dike does not itself control erosion or remove sediment from runoff. A dike prevents erosion by directing runoff to an erosion control device such as a sediment trap or directing runoff away from an erodible area. Temporary diversion dikes should not adversely impact adjacent properties and must conform to local floodplain management regulations, and should not be used in areas with slopes steeper than 10%.

Slopes that are formed during cut and fill operations should be protected from erosion by runoff. A combination of a temporary drainage swale and an earth dike at the top of a slope can divert

runoff to a location where it can be brought to the bottom of the slope (see EC-11, Slope Drains). A combination dike and swale is easily constructed by a single pass of a bulldozer or grader and compacted by a second pass of the tracks or wheels over the ridge. Diversion structures should be installed when the site is initially graded and remain in place until post construction BMPs are installed and the slopes are stabilized.

Diversion practices concentrate surface runoff, increasing its velocity and erosive force. Thus, the flow out of the drain or swale must be directed onto a stabilized area or into a grade stabilization structure. If significant erosion will occur, a swale should be stabilized using vegetation, chemical treatment, rock rip-rap, matting, or other physical means of stabilization. Any drain or swale that conveys sediment laden runoff must be diverted into a sediment basin or trap before it is discharged from the site.

General

- Care must be applied to correctly size and locate earth dikes, drainage swales. Excessively steep, unlined dikes, and swales are subject to erosion and gully formation.
- Conveyances should be stabilized.
- Use a lined ditch for high flow velocities.
- Select flow velocity based on careful evaluation of the risks due to erosion of the measure, soil types, overtopping, flow backups, washout, and drainage flow patterns for each project site.
- Compact any fills to prevent unequal settlement.
- Do not divert runoff onto other property without securing written authorization from the property owner.
- When possible, install and utilize permanent dikes, swales, and ditches early in the construction process.
- Provide stabilized outlets.

Earth Dikes

Temporary earth dikes are a practical, inexpensive BMP used to divert stormwater runoff. Temporary diversion dikes should be installed in the following manner:

- All dikes should be compacted by earth moving equipment.
- All dikes should have positive drainage to an outlet.
- All dikes should have 2:1 or flatter side slopes, 18 in. minimum height, and a minimum top width of 24 in. Wide top widths and flat slopes are usually needed at crossings for construction traffic.
- The outlet from the earth dike must function with a minimum of erosion. Runoff should be conveyed to a sediment trapping device such as a Sediment Trap (SE-3) or Sediment Basin

(SE-2) when either the dike channel or the drainage area above the dike are not adequately stabilized.

- Temporary stabilization may be achieved using seed and mulching for slopes less than 5% and either rip-rap or sod for slopes in excess of 5%. In either case, stabilization of the earth dike should be completed immediately after construction or prior to the first rain.
- If riprap is used to stabilize the channel formed along the toe of the dike, the following typical specifications apply:

Channel Grade	Riprap Stabilization
0.5-1.0%	4 in. Rock
1.1-2.0%	6 in. Rock
2.1-4.0%	8 in. Rock
4.1-5.0%	8 in. -12 in. Riprap

- The stone riprap, recycled concrete, etc. used for stabilization should be pressed into the soil with construction equipment.
- Filter cloth may be used to cover dikes in use for long periods.
- Construction activity on the earth dike should be kept to a minimum.

Drainage Swales

Drainage swales are only effective if they are properly installed. Swales are more effective than dikes because they tend to be more stable. The combination of a swale with a dike on the downhill side is the most cost effective diversion.

Standard engineering design criteria for small open channel and closed conveyance systems should be used (see the local drainage design manual). Unless local drainage design criteria state otherwise, drainage swales should be designed as follows:

- No more than 5 acres may drain to a temporary drainage swale.
- Place drainage swales above or below, not on, a cut or fill slope.
- Swale bottom width should be at least 2 ft
- Depth of the swale should be at least 18 in.
- Side slopes should be 2:1 or flatter.
- Drainage or swales should be laid at a grade of at least 1 percent, but not more than 15 percent.
- The swale must not be overtopped by the peak discharge from a 10-year storm, irrespective of the design criteria stated above.

- Remove all trees, stumps, obstructions, and other objectionable material from the swale when it is built.
- Compact any fill material along the path of the swale.
- Stabilize all swales immediately. Seed and mulch swales at a slope of less than 5 percent, and use rip-rap or sod for swales with a slope between 5 and 15 percent. For temporary swales, geotextiles and mats (EC-7) may provide immediate stabilization.
- Irrigation may be required to establish sufficient vegetation to prevent erosion.
- Do not operate construction vehicles across a swale unless a stabilized crossing is provided.
- Permanent drainage facilities must be designed by a professional engineer (see the local drainage design criteria for proper design).
- At a minimum, the drainage swale should conform to predevelopment drainage patterns and capacities.
- Construct the drainage swale with a positive grade to a stabilized outlet.
- Provide erosion protection or energy dissipation measures if the flow out of the drainage swale can reach an erosive velocity.

Costs

- Cost ranges from $15 to $55 per ft for both earthwork and stabilization and depends on availability of material, site location, and access.
- Small dikes: $2.50 - $6.50/linear ft; Large dikes: $2.50/yd^3.
- The cost of a drainage swale increases with drainage area and slope. Typical swales for controlling internal erosion are inexpensive, as they are quickly formed during routine earthwork.

Inspection and Maintenance

- Inspect BMPs prior to forecast rain, daily during extended rain events, after rain events, weekly during the rainy season, and at two-week intervals during the non-rainy season.
- Inspect BMPs subject to non-stormwater discharges daily while non-stormwater discharges occur.
- Inspect ditches and berms for washouts. Replace lost riprap, damaged linings or soil stabilizers as needed.
- Inspect channel linings, embankments, and beds of ditches and berms for erosion and accumulation of debris and sediment. Remove debris and sediment and repair linings and embankments as needed.
- Temporary conveyances should be completely removed as soon as the surrounding drainage area has been stabilized or at the completion of construction

References

Erosion and Sediment Control Handbook, S.J. Goldman, K. Jackson, T.A. Bursetynsky, P.E., McGraw Hill Book Company, 1986.

Manual of Standards of Erosion and Sediment Control Measures, Association of Bay Area Governments, May 1995.

Metzger, M.E. 2004. Managing mosquitoes in stormwater treatment devices. University of California Division of Agriculture and Natural Resources, Publication 8125. On-line: http://anrcatalog.ucdavis.edu/pdf/8125.pdf

National Association of Home Builders (NAHB). Stormwater Runoff & Nonpoint Source Pollution Control Guide for Builders and Developers. National Association of Home Builders, Washington, D.C., 1995

National Management Measures to Control Nonpoint Source Pollution from Urban Areas, United States Environmental Protection Agency, 2002.

Southeastern Wisconsin Regional Planning Commission (SWRPC). Costs of Urban Nonpoint Source Water Pollution Control Measures. Technical Report No. 31. Southeastern Wisconsin Regional Planning Commission, Waukesha, WI. 1991

Stormwater Quality Handbooks Construction Site Best Management Practices (BMPs) Manual, State of California Department of Transportation (Caltrans), November 2000.

Stormwater Management of the Puget Sound Basin, Technical Manual, Publication #91-75, Washington State Department of Ecology, February 1992.

Water Quality Management Plan for the Lake Tahoe Region, Volume II, Handbook of Management Practices, Tahoe Regional Planning Agency, November 1988.

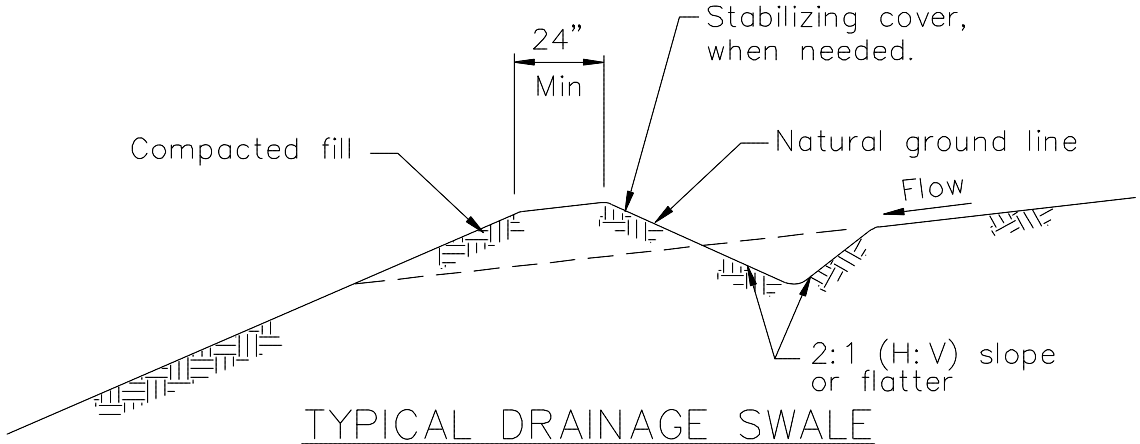

TYPICAL DRAINAGE SWALE
NOT TO SCALE

NOTES:

1. Stabilize inlet, outlets and slopes.
2. Properly compact the subgrade.

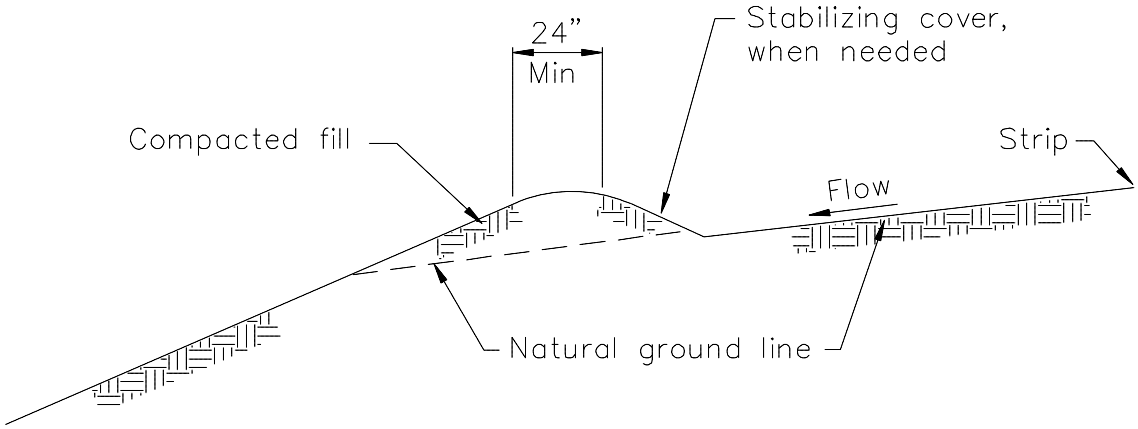

TYPICAL EARTH DIKE
NOT TO SCALE

Velocity Dissipation Devices EC-10

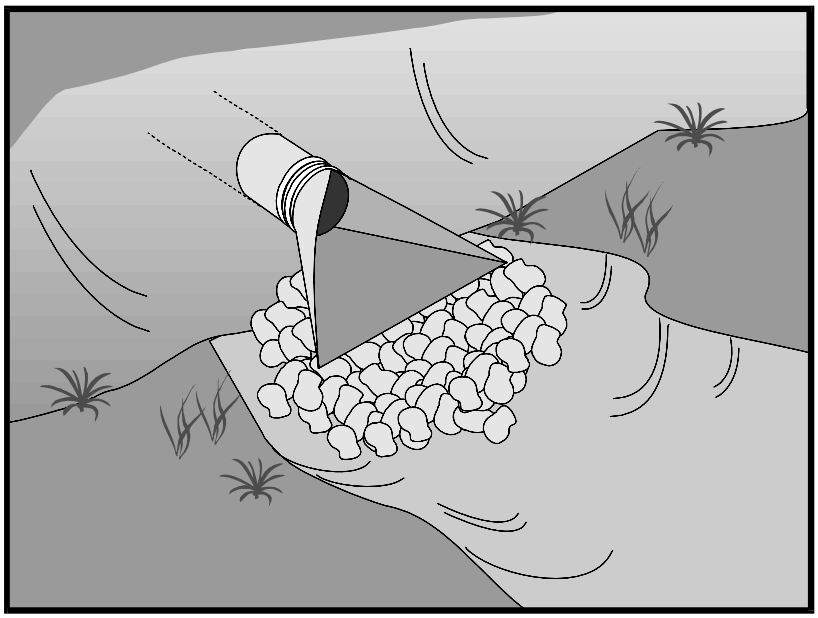

Categories

EC	Erosion Control	☑
SE	Sediment Control	
TC	Tracking Control	
WE	Wind Erosion Control	
NS	Non-Stormwater Management Control	
WM	Waste Management and Materials Pollution Control	

Legend:

☑ **Primary Objective**

☒ **Secondary Objective**

Targeted Constituents

Sediment	☑
Nutrients	
Trash	
Metals	
Bacteria	
Oil and Grease	
Organics	

Potential Alternatives

None

Description and Purpose

Outlet protection is a physical device composed of rock, grouted riprap, or concrete rubble, which is placed at the outlet of a pipe or channel to prevent scour of the soil caused by concentrated, high velocity flows.

Suitable Applications

Whenever discharge velocities and energies at the outlets of culverts, conduits, or channels are sufficient to erode the next downstream reach. This includes temporary diversion structures to divert runon during construction.

- These devices may be used at the following locations:
  - Outlets of pipes, drains, culverts, slope drains, diversion ditches, swales, conduits, or channels.
  - Outlets located at the bottom of mild to steep slopes.
  - Discharge outlets that carry continuous flows of water.
  - Outlets subject to short, intense flows of water, such as flash floods.
  - Points where lined conveyances discharge to unlined conveyances

Limitations

- Large storms or high flows can wash away the rock outlet protection and leave the area susceptible to erosion.

- Sediment captured by the rock outlet protection may be difficult to remove without removing the rock.
- Outlet protection may negatively impact the channel habitat.
- Grouted riprap may break up in areas of freeze and thaw.
- If there is not adequate drainage, and water builds up behind grouted riprap, it may cause the grouted riprap to break up due to the resulting hydrostatic pressure.
- Sediment accumulation, scour depressions, and/or persistent non-stormwater discharges can result in areas of standing water suitable for mosquito production in velocity dissipation devices.

Implementation

General

Outlet protection is needed where discharge velocities and energies at the outlets of culverts, conduits or channels are sufficient to erode the immediate downstream reach. This practice protects the outlet from developing small eroded pools (plange pools), and protects against gully erosion resulting from scouring at a culvert mouth.

Design and Layout

As with most channel design projects, depth of flow, roughness, gradient, side slopes, discharge rate, and velocity should be considered in the outlet design. Compliance to local and state regulations should also be considered while working in environmentally sensitive streambeds. General recommendations for rock size and length of outlet protection mat are shown in the rock outlet protection figure in this BMP and should be considered minimums. The apron length and rock size gradation are determined using a combination of the discharge pipe diameter and estimate discharge rate: Select the longest apron length and largest rock size suggested by the pipe size and discharge rate. Where flows are conveyed in open channels such as ditches and swales, use the estimated discharge rate for selecting the apron length and rock size. Flows should be same as the culvert or channel design flow but never the less than the peak 5 year flow for temporary structures planned for one rainy season, or the 10 year peak flow for temporary structures planned for two or three rainy seasons.

- There are many types of energy dissipaters, with rock being the one that is represented in the attached figure.
- Best results are obtained when sound, durable, and angular rock is used.
- Install riprap, grouted riprap, or concrete apron at selected outlet. Riprap aprons are best suited for temporary use during construction. Grouted or wired tied rock riprap can minimize maintenance requirements.
- Rock outlet protection is usually less expensive and easier to install than concrete aprons or energy dissipaters. It also serves to trap sediment and reduce flow velocities.
- Carefully place riprap to avoid damaging the filter fabric.

- Stone 4 in. to 6 in. may be carefully dumped onto filter fabric from a height not to exceed 12 in.
- Stone 8 in. to 12 in. must be hand placed onto filter fabric, or the filter fabric may be covered with 4 in. of gravel and the 8 in. to 12 in. rock may be dumped from a height not to exceed 16 in.
- Stone greater than 12 in. shall only be dumped onto filter fabric protected with a layer of gravel with a thickness equal to one half the D_{50} rock size, and the dump height limited to twice the depth of the gravel protection layer thickness.

- For proper operation of apron: Align apron with receiving stream and keep straight throughout its length. If a curve is needed to fit site conditions, place it in upper section of apron.
- Outlets on slopes steeper than 10 percent should have additional protection.

Costs

Costs are low if material is readily available. If material is imported, costs will be higher. Average installed cost is $150 per device.

Inspection and Maintenance

- Inspect BMPs prior to forecast rain, daily during extended rain events, after rain events, weekly during the rainy season, and at two-week intervals during the non-rainy season.
- Inspect BMPs subjected to non-stormwater discharges daily while non-stormwater discharges occur. Minimize areas of standing water by removing sediment blockages and filling scour depressions.
- Inspect apron for displacement of the riprap and damage to the underlying fabric. Repair fabric and replace riprap that has washed away. If riprap continues to wash away, consider using larger material.
- Inspect for scour beneath the riprap and around the outlet. Repair damage to slopes or underlying filter fabric immediately.
- Temporary devices should be completely removed as soon as the surrounding drainage area has been stabilized or at the completion of construction.

References

County of Sacramento Improvement Standards, Sacramento County, May 1989.

Erosion and Sediment Control Handbook, S.J. Goldman, K. Jackson, T.A. Bursztynsky, P.E., McGraw Hill Book Company, 1986.

Handbook of Steel Drainage & Highway Construction, American Iron and Steel Institute, 1983.

Manual of Standards of Erosion and Sediment Control Measures, Association of Bay Area Governments, May 1995.

Metzger, M.E. 2004. Managing mosquitoes in stormwater treatment devices. University of California Division of Agriculture and Natural Resources, Publication 8125. On-line: http://anrcatalog.ucdavis.edu/pdf/8125.pdf

Stormwater Quality Handbooks Construction Site Best Management Practices (BMPs) Manual, state of California Department of Transportation (Caltrans), November 2000.

Stormwater Management of the Puget Sound Basin, Technical Manual, Publication #91-75, Washington State Department of Ecology, February 1992.

Water Quality Management Plan for the Lake Tahoe Region, Volume II, Handbook of Management Practices, Tahoe Regional Planning Agency, November 1988.

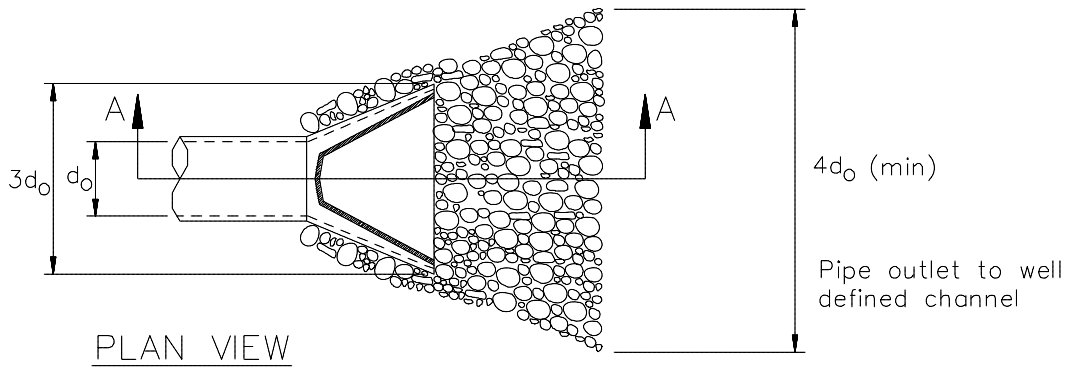

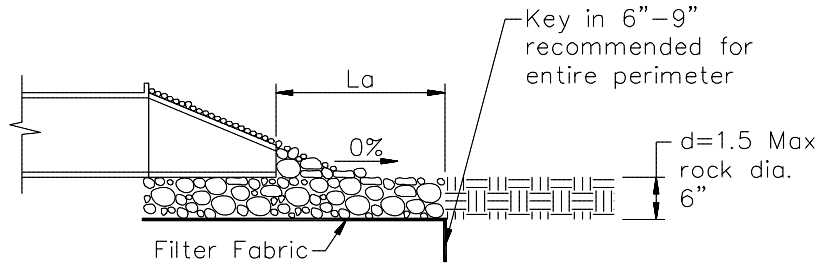

Pipe Diameter inches	Discharge ft³/s	Apron Length, La ft	Rip Rap D_{50} Diameter Min inches
12	5	10	4
	10	13	6
18	10	10	6
	20	16	8
	30	23	12
	40	26	16
24	30	16	8
	40	26	8
	50	26	12
	60	30	16

For larger or higher flows consult a Registered Civil Engineer
Source: USDA - SCS

Slope Drains EC-11

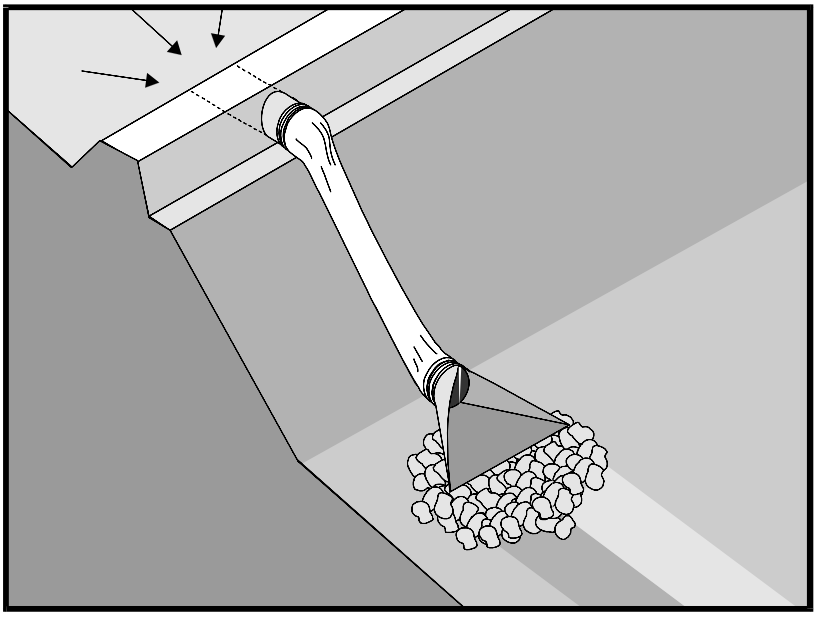

Categories

EC	Erosion Control	☑
SE	Sediment Control	
TC	Tracking Control	
WE	Wind Erosion Control	
NS	Non-Stormwater Management Control	
WM	Waste Management and Materials Pollution Control	

Legend:

☑ **Primary Objective**

☒ **Secondary Objective**

Targeted Constituents

Sediment	☑
Nutrients	
Trash	
Metals	
Bacteria	
Oil and Grease	
Organics	

Potential Alternatives

EC-9 Earth Dike, Drainage Swales

Description and Purpose

A slope drain is a pipe used to intercept and direct surface runoff or groundwater into a stabilized watercourse, trapping device, or stabilized area. Slope drains are used with earth dikes and drainage ditches to intercept and direct surface flow away from slope areas to protect cut or fill slopes.

Suitable Applications

- Where concentrated flow of surface runoff must be conveyed down a slope in order to prevent erosion.
- Drainage for top of slope diversion dikes or swales.
- Drainage for top of cut and fill slopes where water can accumulate.
- Emergency spillway for a sediment basin.

Limitations

Installation is critical for effective use of the pipe slope drain to minimize potential gully erosion.

- Maximum drainage area per slope drain is 10 acres. (For large areas use a paved chute, rock lined channel, or additional pipes.)
- Severe erosion may result when slope drains fail by overtopping, piping, or pipe separation.
  - During large storms, pipe slope drains may become clogged or over charged, forcing water around the pipe

and causing extreme slope erosion.

- If the sectional downdrain is not sized correctly, the runoff can spill over the drain sides causing gully erosion and potential failure of the structure.

- Dissipation of high flow velocities at the pipe outlet is required to avoid downstream erosion.
- Sediment accumulation, scour depressions, and/or persistent non-stormwater discharges can result in areas of standing water suitable for mosquito production in energy dissipaters associated with slope drain outlets.

Implementation

General

The slope drain is applicable for any construction site where concentrated surface runoff can accumulate and must be conveyed down the slope in order to prevent erosion. The slope drain is effective because it prevents the stormwater from flowing directly down the slope by confining all the runoff into an enclosed pipe or channel. Due to the time lag between grading slopes and installation of permanent stormwater collection systems and slope stabilization measures, temporary provisions to intercept runoff are sometimes necessary. Particularly in steep terrain, slope drains can protect unstabilized areas from erosion.

Installation

The slope drain may be a rigid pipe, such as corrugated metal, a flexible conduit, or a lined terrace drain with the inlet placed on the top of a slope and the outlet at the bottom of the slope. This BMP typically is used in combination with a diversion control, such as an earth dike or drainage swale at the top of the slope.

The following criteria must be considered when siting slope drains.

- Permanent structures included in the project plans can often serve as construction BMPs if implemented early. However, the permanent structure must meet or exceed the criteria for the temporary structure.
- Inlet structures must be securely entrenched and compacted to avoid severe gully erosion.
- Slope drains must be securely anchored to the slope and must be adequately sized to carry the capacity of the design storm and associated forces.
- Outlets must be stabilized with riprap, concrete or other type of energy dissipator, or directed into a stable sediment trap or basin. See EC-10, Velocity Dissipation Devices.
- Debris racks are recommended at the inlet. Debris racks located several feet upstream of the inlet can usually be larger than racks at the inlet, and thus provide enhanced debris protection and less plugging.
- Safety racks are also recommended at the inlet and outlet of pipes where children or animals could become entrapped.
- Secure inlet and surround with dikes to prevent gully erosion and anchor pipe to slope.

- When using slope drains, limit drainage area to 10 acres per pipe. For larger areas, use a rock lined channel or a series of pipes.
- Size to convey at least the peak flow of a 10-year storm. The design storm is conservative due to the potential impact of system failures.
- Maximum slope generally limited to 2:1 (H:V) as energy dissipation below steeper slopes is difficult.
- Direct surface runoff to slope drains with interceptor dikes. See BMP EC-9, Earth Dikes and Drainage Swales. Top of interceptor dikes should be 12 in. higher than the top of the slope drain.
- Slope drains can be placed on or buried underneath the slope surface.
- Recommended materials include both metal and plastic pipe, either corrugated or smooth wall. Concrete pipe can also be used.
- When installing slope drains:
  - Install slope drains perpendicular to slope contours.
  - Compact soil around and under entrance, outlet, and along length of pipe.
  - Securely anchor and stabilize pipe and appurtenances into soil.
  - Check to ensure that pipe connections are watertight.
  - Protect area around inlet with filter cloth. Protect outlet with riprap or other energy dissipation device. For high energy discharges, reinforce riprap with concrete or use reinforced concrete device.
  - Protect outlet of slope drains using a flared end section when outlet discharges to a flexible energy dissipation device.
  - A flared end section installed at the inlet will improve flow into the slope drain and prevent erosion at the pipe entrance. Use a flared end section with a 6 in. minimum toe plate to help prevent undercutting. The flared section should slope towards the pipe inlet.

Design and Layout

The capacity for temporary drains should be sufficient to convey at least the peak runoff from a 10-year rainfall event. The pipe size may be computed using the Rational Method or a method established by the local municipality. Higher flows must be safely stored or routed to prevent any offsite concentration of flow and any erosion of the slope. The design storm is purposely conservative due to the potential impacts associated with system failures.

As a guide, temporary pipe slope drains should not be sized smaller than shown in the following table:

Minimum Pipe Diameter (Inches)	Maximum Drainage Area (Acres)
12	1.0
18	3.0
21	5.0
24	7.0
30	10.0

Larger drainage areas can be treated if the area can be subdivided into areas of 10 acres or less and each area is treated as a separate drainage. Drainage areas exceeding 10 acres must be designed by a Registered Civil Engineer and approved by the agency that issued the grading permit.

Materials:

Soil type, rainfall patterns, construction schedule, local requirements, and available supply are some of the factors to be considered when selecting materials. The following types of slope drains are commonly used:

- **Rigid Pipe:** This type of slope drain is also known as a pipe drop. The pipe usually consists of corrugated metal pipe or rigid plastic pipe. The pipe is placed on undisturbed or compacted soil and secured onto the slope surface or buried in a trench. Concrete thrust blocks must be used when warranted by the calculated thrust forces. Collars should be properly installed and secured with metal strappings or watertight collars.

- **Flexible Pipe**: The flexible pipe slope drain consists of a flexible tube of heavy duty plastic, rubber, or composite material. The tube material is securely anchored onto the slope surface. The tube should be securely fastened to the metal inlet and outlet conduit sections with metal strappings or watertight collars.

- **Section Downdrains**: The section downdrain consists of pre-fabricated, section conduit of half round or third round material. The sectional downdrain performs similar to a flume or chute. The pipe must be placed on undisturbed or compacted soil and secured into the slope.

- **Concrete-lined Terrace Drain:** This is a concrete channel for draining water from a terrace on a slope to the next level. These drains are typically specified as permanent structures and if installed early, can serve as slope drains during construction, which should be designed according to local drainage design criteria.

Costs

- Cost varies based on pipe selection and selected outlet protection.

Corrugated Steel Pipes, Per Foot	
Size	Supplied and Installed Cost (No Trenching Included)
12”	$19.60 per LF
15”	$22.00
18”	$26.00
24”	$32.00
30”	$50.00
PVC Pipes, Per Foot	
Size	Supplied and Installed Cost (No Trenching Included)
12”	$24.50
14”	$49.00
16”	$51.00
18”	$54.00
20”	$66.00
24”	$93.00
30”	$130.00

Inspection and Maintenance

- Inspect BMPs prior to forecast rain, daily during extended rain events, after rain events, weekly during the rainy season, and at two-week intervals during the non-rainy season.
- Inspect BMPs subjected to non-stormwater discharges daily while non-stormwater discharges occur. Minimize areas of standing water by removing sediment blockages and filling scour depressions.
- Inspect outlet for erosion and downstream scour. If eroded, repair damage and install additional energy dissipation measures. If downstream scour is occurring, it may be necessary to reduce flows being discharged into the channel unless other preventative measures are implemented.
- Insert inlet for clogging or undercutting. Remove debris from inlet to maintain flows. Repair undercutting at inlet and if needed, install flared section or rip rap around the inlet to prevent further undercutting.
- Inspect pipes for leakage. Repair leaks and restore damaged slopes.
- Inspect slope drainage for accumulations of debris and sediment.

- Remove built up sediment from entrances and outlets as required. Flush drains if necessary; capture and settle out sediment from discharge.
- Make sure water is not ponding onto inappropriate areas (e.g., active traffic lanes, material storage areas, etc.).
- Pipe anchors must be checked to ensure that the pipe remains anchored to the slope. Install additional anchors if pipe movement is detected.

References

Draft – Sedimentation and Erosion Control, An Inventory of Current Practices, U.S.E.P.A., April 1990.

Metzger, M.E. 2004. Managing mosquitoes in stormwater treatment devices. University of California Division of Agriculture and Natural Resources, Publication 8125. On-line: http://anrcatalog.ucdavis.edu/pdf/8125.pdf

National Association of Home Builders (NAHB). Stormwater Runoff & Nonpoint Source Pollution Control Guide for Builders and Developers. National Association of Home Builders, Washington, D.C., 1995

National Management Measures to Control Nonpoint Source Pollution from Urban Areas, United States Environmental Protection Agency, 2002.

Stormwater Quality Handbooks Construction Site Best Management Practices (BMPs) Manual, State of California Department of Transportation (Caltrans), November 2000.

Stormwater Management of the Puget Sound Basin, Technical Manual, Publication #91-75, Washington State Department of Ecology, February 1992.

Water Quality Management Plan for the Lake Tahoe Region, Volume II, Handbook of Management Practices, Tahoe Regional Planning Agency, November 1988.

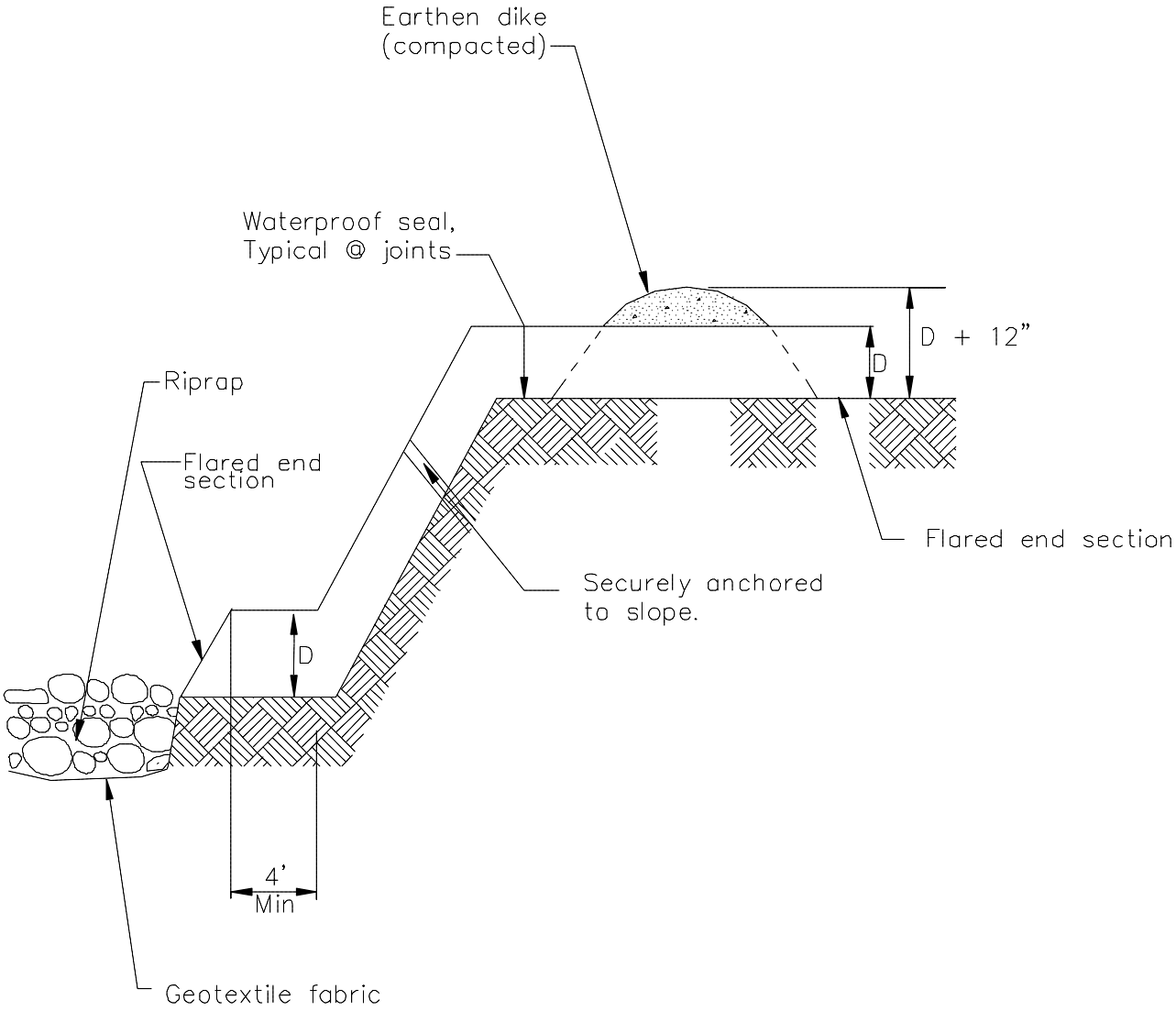

TYPICAL SLOPE DRAIN
NOT TO SCALE

Streambank Stabilization EC-12

Categories

EC	Erosion Control	☑
SE	Sediment Control	☒
TC	Tracking Control	
WE	Wind Erosion Control	
NS	Non-Stormwater Management Control	☒
WM	Waste Management and Materials Pollution Control	

Legend:

☑ **Primary Objective**

☒ **Secondary Objective**

Targeted Constituents

Sediment	☑
Nutrients	
Trash	
Metals	
Bacteria	
Oil and Grease	
Organics	

Potential Alternatives

Combination of erosion and sediment controls.

Description and Purpose

Stream channels, streambanks, and associated riparian areas are dynamic and sensitive ecosystems that respond to changes in land use activity. Streambank and channel disturbance resulting from construction activities can increase the stream's sediment load, which can cause channel erosion or sedimentation and have adverse affects on the biotic system. BMPs can reduce the discharge of sediment and other pollutants to minimize the impact of construction activities on watercourses. Streams on the 303(d) list and listed for sediment may require numerous measures to prevent any increases in sediment load to the stream.

Suitable Applications

These procedures typically apply to all construction projects that disturb or occur within stream channels and their associated riparian areas.

Limitations

Specific permit requirements or mitigation measures such as Regional Water Quality Control Board (RWQCB) 401 Certification, U.S. Army Corps of Engineers 404 permit and approval by California Department of Fish and Game supercede the guidance in this BMP.

- If numerical based water quality standards are mentioned in any of these and other related permits, testing and sampling may be required. Streams listed as 303(d) impaired for sediment, silt, or turbidity, are required to

conduct sampling to verify that there is no net increase in sediment load due to construction activities.

Implementation

Planning

- Proper planning, design, and construction techniques can minimize impacts normally associated with in stream construction activities. Poor planning can adversely affect soil, fish, wildlife resources, land uses, or land users. Planning should take into account: scheduling; avoidance of in-stream construction; minimizing disturbance area and construction time period; using pre-disturbed areas; selecting crossing location; and selecting equipment.

Scheduling

- Construction activities should be scheduled according to the relative sensitivity of the environmental concerns and in accordance with EC-1, Scheduling. Scheduling considerations will be different when working near perennial streams vs. ephemeral streams and are as follows.

- When in-stream construction is conducted in a perennial stream, work should optimally be performed during the rainy season. This is because in the summer, any sediment-containing water that is discharged into the watercourse will cause a large change in both water clarity and water chemistry. During the rainy season, there is typically more and faster flowing water in the stream so discharges are diluted faster. However, should in-stream work be scheduled for summer, establishing an isolation area, or diverting the stream, will significantly decrease the amount of sediment stirred up by construction work. Construction work near perennial streams should optimally be performed during the dry season (see below).

- When working in or near ephemeral streams, work should be performed during the dry season. By their very nature, ephemeral streams are usually dry in the summer, and therefore, in-stream construction activities will not cause significant water quality problems. However, when tying up the site at the end of the project, wash any fines (see Washing Fines) that accumulated in the channel back into the bed material, to decrease pollution from the first rainstorm of the season.

- When working near ephemeral or perennial streams, erosion and sediment controls (see silt fences, straw bale barriers, etc.) should be implemented to keep sediment out of stream channel.

Minimize Disturbance

- Minimize disturbance through: selection of the narrowest crossing location; limiting the number of equipment trips across a stream during construction; and, minimizing the number and size of work areas (equipment staging areas and spoil storage areas). Place work areas at least 50 ft from stream channel. Field reconnaissance should be conducted during the planning stage to identify work areas.

Use of Pre-Disturbed Areas

- Locate project sites and work areas in areas disturbed by prior construction or other activity when possible.

Selection of Project Site

- Avoid steep and unstable banks, highly erodible or saturated soils, or highly fractured rock.
- Select project site that minimizes disturbance to aquatic species or habitat.

Equipment Selection

- Select equipment that reduces the amount of pressure exerted on the ground surface, and therefore, reduces erosion potential and/or use overhead or aerial access for transporting equipment across drainage channels. Use equipment that exerts ground pressures of less than 5 or 6 lb/in^2, where possible. Low ground pressure equipment includes: wide or high flotation tires (34 to 72 in. wide); dual tires; bogie axle systems; tracked machines; lightweight equipment; and, central tire inflation systems.

Streambank Stabilization

Preservation of Existing Vegetation

- Preserve existing vegetation in accordance with EC-2, Preservation of Existing Vegetation. In a streambank environment, preservation of existing vegetation provides the following benefits.

Water Quality Protection

- Vegetated buffers on slopes trap sediment and promote groundwater recharge. The buffer width needed to maintain water quality ranges from 15 to 100 ft. On gradual slopes, most of the filtering occurs within the first 30 ft. Steeper slopes require a greater width of vegetative buffer to provide water quality benefits.

Streambank Stabilization

- The root system of riparian vegetation stabilizes streambanks by increasing tensile strength in the soil. The presence of vegetation modifies the moisture condition of slopes (infiltration, evapo transpiration, interception) and increases bank stability.

Riparian Habitat

- Buffers of diverse riparian vegetation provide food and shelter for riparian and aquatic organisms. Minimizing impacts to fisheries habitat is a major concern when working near streams and rivers. Riparian vegetation provides shade, shelter, organic matter (leaf detritus and large woody debris), and other nutrients that are necessary for fish and other aquatic organisms. Buffer widths for habitat concerns are typically wider than those recommended for water quality concerns (100 to 1500 ft).
- When working near watercourses, it is important to understand the work site's placement in the watershed. Riparian vegetation in headwater streams has a greater impact on overall water quality than vegetation in downstream reaches. Preserving existing vegetation upstream is necessary to maintain water quality, minimize bank failure, and maximize riparian habitat, downstream of the work site.

Limitations

- Local county and municipal ordinances regarding width, extent and type of vegetative buffer required may exceed the specifications provided here; these ordinances should be investigated prior to construction.

Streambank Stabilization Specific Installation

- As a general rule, the width of a buffer strip between a road and the stream is recommended to be 50 ft plus four times the percent slope of the land, measured between the road and the top of stream bank.

Hydraulic Mulch

- Apply hydraulic mulch on disturbed streambanks above mean high water level in accordance with EC-3, Hydraulic Mulch to provide temporary soil stabilization.

Limitations

- Do not place hydraulic mulch or tackifiers below the mean high water level, as these materials could wash into the channel and impact water quality or possibly cause eutrophication (eutrophication is an algal bloom caused by excessively high nutrient levels in the water).

Hydroseeding

- Hydroseed disturbed streambanks in accordance with EC-4, Hydroseeding.

Limitations

- Do not place tackifiers or fertilizers below the mean high water level, as these materials could wash into the channel and impact water quality or possibly cause eutrophication.

Soil Binders

- Apply soil binders to disturbed streambanks in accordance with EC-5, Soil Binders.

Limitations

- Do not place soil binders below the mean high water level. Soil binder must be environmentally benign and non-toxic to aquatic organisms.

Straw Mulch

- Apply straw mulch to disturbed streambanks in accordance with EC-6, Straw Mulch.

Limitations

- Do not place straw mulch below the mean high water level, as this material could wash into the channel and impact water quality or possibly cause eutrophication.

Geotextiles and Mats

- Install geotextiles and mats as described in EC-7, Geotextiles and Mats, to stabilize disturbed channels and streambanks. Not all applications should be in the channel, for example, certain geotextile netting may snag fish gills and are not appropriate in fish bearing streams. Geotextile fabrics that are not biodegradable are not appropriate for in stream use. Additionally, geotextile fabric or blankets placed in channels must be adequate to sustain anticipated hydraulic forces.

Earth Dikes, Drainage Swales, and Lined Ditches

- Convey, intercept, or divert runoff from disturbed streambanks using EC-9, Earth Dikes and Drainage Swales.

Limitations

- Do not place earth dikes in watercourses, as these structures are only suited for intercepting sheet flow, and should not be used to intercept concentrated flow.
- Appropriately sized velocity dissipation devices (EC-10) must be placed at outlets to minimize erosion and scour.

Velocity Dissipation Devices

- Place velocity dissipation devices at outlets of pipes, drains, culverts, slope drains, diversion ditches, swales, conduits or channels in accordance with EC-10, Velocity Dissipation Devices.

Slope Drains

- Use slope drains to intercept and direct surface runoff or groundwater into a stabilized watercourse, trapping device or stabilized area in accordance with EC-11, Slope Drains.

Limitations

- Appropriately sized outlet protection and velocity dissipation devices (EC-10) must be placed at outlets to minimize erosion and scour.

Streambank Sediment Control

Silt Fences

- Install silt fences in accordance with SE-1, Silt Fence, to control sediment. Silt fences should only be installed where sediment laden water can pond, thus allowing the sediment to settle out.

Fiber Rolls

- Install fiber rolls in accordance with SE-5, Fiber Rolls, along contour of slopes above the high water level to intercept runoff, reduce flow velocity, release the runoff as sheet flow and provide removal of sediment from the runoff. In a stream environment, fiber rolls should be used in conjunction with other sediment control methods such as SE-1, Silt Fence or SE-9 Straw Bale Barrier. Install silt fence, straw bale barrier, or other erosion control method along toe of slope above the high water level.

Gravel Bag Berm

- A gravel bag berm or barrier can be utilized to intercept and slow the flow of sediment laden sheet flow runoff in accordance with SE-6, Gravel Bag Berm. In a stream environment gravel bag barriers can allow sediment to settle from runoff before water leaves the construction site and can be used to isolate the work area from the live stream.

Limitations

- Gravel bag barriers are not recommended as a perimeter sediment control practice around streams.

Straw Bale Barrier

- Install straw bale barriers in accordance with SE-9, Straw Bale Barrier, to control sediment. Straw bale barriers should only be installed where sediment laden water can pond, thus allowing the sediment to settle out. Install a silt fence in accordance with SE-1, Silt Fence,

on down slope side of straw bale barrier closest to stream channel to provide added sediment control.

Rock Filter

Description and Purpose

Rock filters are temporary erosion control barriers composed of rock that is anchored in place. Rock filters detain the sediment laden runoff, retain the sediment, and release the water as sheet flow at a reduced velocity. Typical rock filter installations are illustrated at the end of this BMP.

Applications

- Near the toe of slopes that may be subject to flow and rill erosion.

Limitations

- Inappropriate for contributing drainage areas greater than 5 acres.
- Requires sufficient space for ponded water.
- Ineffective for diverting runoff because filters allow water to slowly seep through.
- Rock filter berms are difficult to remove when construction is complete.
- Unsuitable in developed areas or locations where aesthetics is a concern.

Specifications

- Rock: open graded rock, 0.75 to 5 in. for concentrated flow applications.
- Woven wire sheathing: 1 in. diameter, hexagonal mesh, galvanized 20gauge (used with rock filters in areas of concentrated flow).
- In construction traffic areas, maximum rock berm heights should be 12 in. Berms should be constructed every 300 ft on slopes less than 5%, every 200 ft on slopes between 5% and 10%, and every 100 ft on slopes greater than 10%.

Maintenance

- Inspect and verify that activity-based BMPs are in place prior to the commencement of associated activities. While activities associated with the BMP are under way, inspect weekly during the rainy season and at two-week intervals in the non-rainy season to verify continued BMP implementation.
- Inspect BMPs subject to non-stormwater discharges daily while non-stormwater discharges occur.
- Reshape berms as needed and replace lost or dislodged rock, and filter fabric.
- Sediment that accumulates in the BMP must be periodically removed in order to maintain BMP effectiveness. Sediment should be removed when the sediment accumulation reaches one third of the barrier height. Sediment removed during maintenance may be incorporated into earthwork on the site or disposed at an appropriate location.

K-rail

Description and Purpose

This is temporary sediment control that uses K-rails to form the sediment deposition area, or to isolate the near bank construction area. Install K-rails at toe of slope in accordance with procedures described in NS-5, Clear Water Diversion.

Barriers are placed end to end in a pre-designed configuration and gravel filled bags are used at the toe of the barrier and at their abutting ends to seal and prevent movement of sediment beneath or through the barrier walls.

Appropriate Applications

- This technique is useful at the toe of embankments, cuts or fills slopes.

Limitations

- The K-rail method should not be used to dewater a project site, as the barrier is not watertight.

Implementation

- Refer to NS-5, Clear Water Diversion, for implementation requirements.

Instream Construction Sediment Control

There are three different options currently available for reducing turbidity while working in a stream or river. The stream can be isolated from the area in which work is occurring by means of a water barrier, the stream can be diverted around the work site through a pipe or temporary channel, or one can employ construction practices that minimize sediment suspension.

Whatever technique is implemented, an important thing to remember is that dilution can sometimes be the solution. A probable "worst time" to release high TSS into a stream system might be when the stream is very low; summer low flow, for example. During these times, the flow may be low while the biological activity in the stream is very high. Conversely, the addition of high TSS or sediment during a big storm discharge might have a relatively low impact, because the stream is already turbid, and the stream energy is capable of transporting both suspended solids, and large quantities of bedload through the system. The optimum time to "pull" in-stream structures may be during the rising limb of a storm hydrograph.

Techniques to minimize Total Suspended Solids (TSS)

- **Padding** - Padding laid in the stream below the work site may trap some solids that are deposited in the stream during construction. After work is done, the padding is removed from the stream, and placed on the bank to assist in re-vegetation.

- **Clean, washed gravel** - Using clean, washed gravel decreases solid suspension, as there are fewer small particles deposited in the stream.

- **Excavation using a large bucket** - Each time a bucket of soil is placed in the stream, a portion is suspended. Approximately the same amount is suspended whether a small amount of soil is placed in the stream, or a large amount. Therefore, using a large excavator bucket instead of a small one, will reduce the total amount of soil that washes downstream.

- **Use of dozer for backfilling** - Using a dozer for backfilling instead of a backhoe follows the same principles – the fewer times soil is deposited in the stream, the less soil will be suspended.

- **Partial dewatering with a pump** - Partially dewatering a stream with a pump reduces the amount of water, and thus the amount of water that can suspend sediment.

Washing Fines

Definition and Purpose

- Washing fines is an "in-channel" sediment control method, which uses water, either from a water truck or hydrant, to wash stream fines that were brought to the surface of the channel bed during restoration, back into the interstitial spaces of the gravel and cobbles.

- The purpose of this technique is to reduce or eliminate the discharge of sediment from the channel bottom during the first seasonal flow. Sediment should not be allowed into stream channels; however, occasionally in-channel restoration work will involve moving or otherwise disturbing fines (sand and silt sized particles) that are already in the stream, usually below bankfull discharge elevation. Subsequent re-watering of the channel can result in a plume of turbidity and sedimentation.

- This technique washes the fines back into the channel bed. Bedload materials, including gravel cobbles, boulders and those fines, are naturally mobilized during higher storm flows. This technique is intended to delay the discharge until the fines would naturally be mobilized.

Appropriate Applications

- This technique should be used when construction work is required in channels. It is especially useful in intermittent or ephemeral streams in which work is performed "in the dry", and which subsequently become re-watered.

Limitations

- The stream must have sufficient gravel and cobble substrate composition.

- The use of this technique requires consideration of time of year and timing of expected stream flows.

- The optimum time for the use of this technique is in the fall, prior to winter flows.

- Consultation with, and approval from the Department of Fish and Game and the Regional Water Quality Control Board may be required.

Implementation

- Apply sufficient water to wash fines, but not cause further erosion or runoff.

- Apply water slowly and evenly to prevent runoff and erosion.

- Consult with Department of Fish and Game and the Regional Water Quality Control Board for specific water quality requirements of applied water (e.g. chlorine).

Inspection and Maintenance

- None necessary

Costs

Cost may vary according to the combination of practices implemented.

Inspection and Maintenance

- Inspect and verify that activity-based BMPs are in place prior to the commencement of associated activities. While activities associated with the BMP are under way, inspect weekly during the rainy season and at two-week intervals in the non-rainy season to verify continued BMP implementation.
- Inspect BMPs subject to non-stormwater discharges daily while non-stormwater discharges occur.
- Inspect and repair equipment (for damaged hoses, fittings, and gaskets).

References

Manual of Standards of Erosion and Sediment Control Measures, Association of Bay Area Governments, May 1995.

Proposed Guidance Specifying Management Measures for Sources of Nonpoint Pollution in Coastal Waters, Work Group Working Paper, USEPA, April 1992.

Sedimentation and Erosion Control Practices, An Inventory of Current Practices (Draft), UESPA, 1990.

Stormwater Quality Handbooks Construction Site Best Management Practices (BMPs) Manual, State of California Department of Transportation (Caltrans), November 2000.

Stormwater Management for Construction Activities, Developing Pollution Prevention Plans and Best Management Practices, EPA 832-R-92005; USEPA, April 1992.

Water Quality Management Plan for the Lake Tahoe Region, Volume II, Handbook of Management Practices, Tahoe Regional Planning Agency, November 1988.

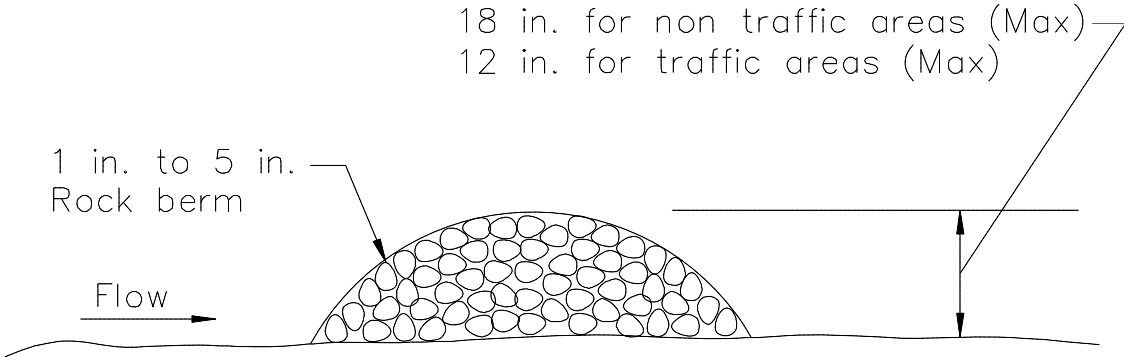

SECTION

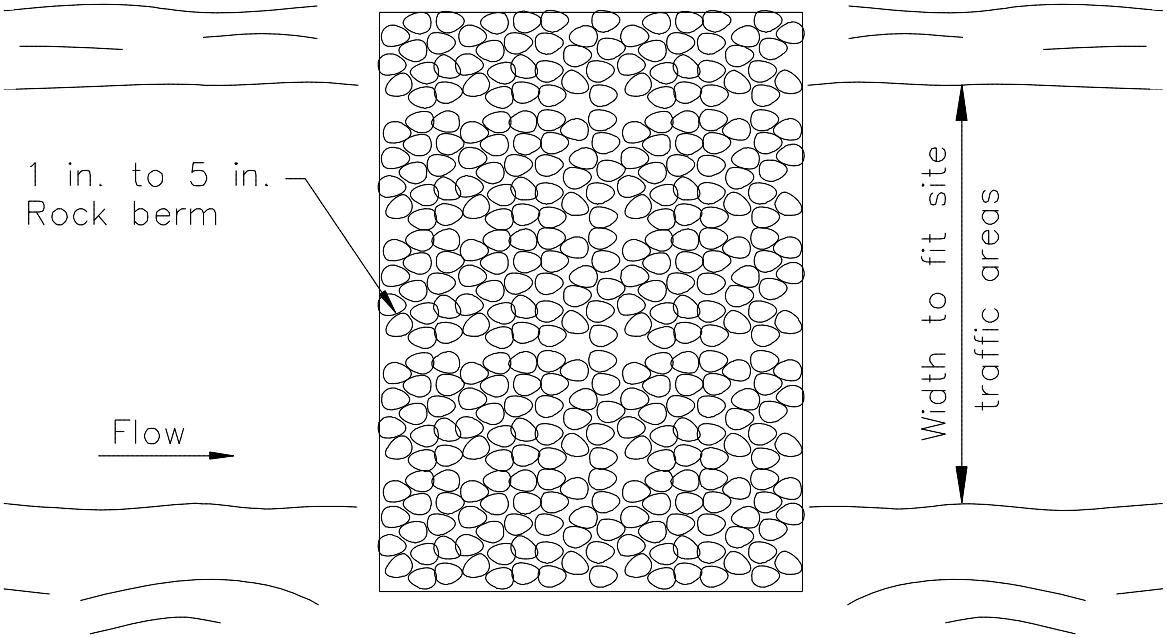

PLAN

TYPICAL ROCK FILTER

NOT TO SCALE

Reserved EC-13

BMP Factsheet removed in 2009.
Formerly PAM. See SE-11, Active Treatment Systems.

Categories

EC	Erosion Control
SE	Sediment Control
TC	Tracking Control
WE	Wind Erosion Control
NS	Non-Stormwater Management Control
WM	Waste Management and Materials Pollution Control

Legend:

☑ **Primary Category**

☒ **Secondary Category**

Targeted Constituents

Sediment
Nutrients
Trash
Metals
Bacteria
Oil and Grease
Organics

Potential Alternatives

Compost Blanket EC-14

Description and Purpose

A compost blanket is applied to slopes and earth disturbed areas to prevent erosion, and in some cases, increase infiltration and/or establish vegetation. The compost blanket can be applied by hand, conveyor system, compost spreader, or pneumatic delivery (blower) system. The blanket thickness is determined from the slope steepness and anticipated precipitation. A compost blanket protects the soil surface from raindrop erosion, particularly rills and gullies that may form under other methods of erosion control.

A compost blanket, if properly installed, can be very successful at vegetation establishment, weed suppression and erosion control. The compost blanket comes into direct contact with the underlying soil, reducing rill formation. Furthermore, compost provides organic matter and nutrients important for vegetation growth. The compost blanket provides soil structure that allows water to infiltrate the soil surface and retain moisture, which also promotes seed germination and vegetation growth, in addition to reducing runoff.

Compost is typically derived from combinations of feedstocks, biosolids, leaf and yard trimmings, manure, wood, or mixed solid waste. Many types of compost are products of municipal recycle or "Greenwaste" programs. Compost is organic and biodegradable and can be left onsite. There are many types of compost with a variety of properties with specific functions, and accordingly, compost selection is an important design consideration in the application of this type of erosion control.

Categories

EC	Erosion Control	☑
SE	Sediment Control	
TC	Tracking Control	
WE	Wind Erosion Control	
NS	Non-Stormwater Management Control	
WM	Waste Management and Materials Pollution Control	

Legend:

☑ **Primary Category**

☒ **Secondary Category**

Targeted Constituents

Sediment	☑
Nutrients	
Trash	
Metals	
Bacteria	
Oil and Grease	
Organics	

Potential Alternatives

EC-3 Hydraulic Mulch

EC-4 Hydroseeding

EC-5 Soil Binders

EC-7 Geotextiles and Mats

EC-8 Wood Mulching

Suitable Applications

A compost blanket is appropriate for slopes and earth disturbed areas requiring protection until permanent stabilization is established. A compost blanket can also used in combination with temporary and/or permanent seeding strategies to enhance plant establishment. Examples include:

- Rough-graded areas that will remain inactive for longer than 14 days
- Soil stockpiles
- Slopes with exposed soil between existing vegetation such as trees or shrubs
- Slopes planted with live, container-grown vegetation
- Disturbed areas where plants are slow to develop

A compost blanket is typically used on slopes of 2:1 (H:V) or gentler. However, a compost blanket can be effective when applied to slopes as steep as 1:1 (H:V) with appropriate design considerations including slope length, blanket thickness, adding components such as a tackifier, or using compost blankets in conjunction with other techniques, such as compost socks and berms or fiber rolls.

Compost can be pre-seeded prior to application to the soil (recommended by the EPA for construction site stormwater runoff control) or seeded after the blanket has been installed. The compost medium can also remove pollutants in stormwater including heavy metals; oil and grease; and hydrocarbons (USEPA, 1998).

Limitations

- Compost can potentially leach nutrients (dissolved phosphorus and nitrogen) into runoff and potentially impact water quality. Compost should not be used directly upstream from nutrient impaired waterbodies (Adams et. al, 2008).
- Compost may also contain other undesirable constituents that are detrimental to water quality. Carefully consider the qualifications and experience of any compost producer/supplier.
- A compost blanket applied by hand is more time intensive and potentially costly. Using a pneumatic blower truck is the recommended cost effective method of application.
- When blowers are used, the treatment areas should be within 300 ft of a road or surface capable of supporting trucks.
- Wind may limit application of compost and result in application to undesired locations.
- Compost blankets should not be applied in areas of concentrated flows.
- Steeper slopes may require additional blanket thickness and other stability measures such as using tackifiers or slope interruption devices (compost socks and berms, or fiber rolls). The same applies for sites with high precipitation totals or during the rainy season.

Implementation

- Additional guidance on the comparison and selection of temporary slope stabilization methods is provided in Appendix F of the Handbook.

Compost Materials

- California Compost Regulations (Title 14, California Code of Regulations, Division 7, Chapter 3.1, Article 7, Section 17868.3) define and require a quality of compost for application. Compost should comply with all physical and chemical requirements. Specific requirements are provided in Table 1 below, taken from Caltrans Standard Special Provision 10-1 (SSP 10-1), Erosion Control (Compost Blanket).

- The compost producer should be fully permitted as specified under the California Integrated Waste Management Board, Local Enforcement Agencies and any other State and Local Agencies that regulate Solid Waste Facilities. If exempt from State permitting requirements, the composting facility should certify that it follows guidelines and procedures for production of compost meeting the environmental health standards of Title 14, California Code of Regulations, Division 7, Chapter 3.1, Article 7.

- The compost producer should be a participant in United States Composting Council's Seal of Testing Assurance program.

- Compost moisture should be considered for composition quality and application purposes. A range of 30-50% is typical. Compost that is too dry is hard to apply and compost that is too wet is more difficult (and more expensive) to transport. For arid or semi-arid areas, or for application during the dry season, use compost with greater moisture content than areas with wetter climates. For wetter or more humid climates or for application during the wet season, drier composts can be used as the compost will absorb moisture from the ambient air.

- Organic content of the compost is also important and should range from 30 to 65% depending on site conditions.

- Compost should be high-quality mature compost. Immature compost can potentially leach nutrients.

- Compost should not be derived from mixed municipal solid waste and should be free of visible contaminants.

- Compost should not contain paint, petroleum products, pesticides or any other chemical residues harmful to animal life or plant growth. Metal concentrations in compost should not exceed the maximum metal concentrations listed under Title 14, California Code of Regulations, Division 7, Chapter 3.1, Section 17868.2.

- Compost should not possess objectionable odors.

- Compost should be weed free.

Table 1. Physical/Chemical Requirements of Compost
Reference - Caltrans SSP-10 Erosion Control Blanket (Compost)

Property	Test Method	Requirement
pH	*TMECC 04.11-A Elastometric pH 1:5 Slurry Method pH Units	6.0–8.0
Soluble Salts	TMECC 04.10-A Electrical Conductivity 1:5 Slurry Method dS/m (mmhos/cm)	0-10.0
Moisture Content	TMECC 03.09-A Total Solids & Moisture at 70+/- 5 deg C % Wet Weight Basis	30-60
Organic Matter Content	TMECC 05.07-A Loss-On-Ignition Organic Matter Method (LOI) % Dry Weight Basis	30–65
Maturity	TMECC 05.05-A Germination and Vigor Seed Emergence Seedling Vigor % Relative to Positive Control	80 or Above 80 or Above
Stability	TMECC 05.08-B Carbon Dioxide Evolution Rate mg CO_2-C/g OM per day	8 or below
Particle Size	TMECC 02.02-B Sample Sieving for Aggregate Size Classification % Dry Weight Basis	100% Passing, 3 inch 90-100% Passing, 1 inch 65-100% Passing, 3/4 inch 0 - 75% Passing, 1/4 inch Maximum length 6 inches
Pathogen	TMECC 07.01-B Fecal Coliform Bacteria < 1000 MPN/gram dry wt.	Pass
Pathogen	TMECC 07.01-B Salmonella < 3 MPN/4 grams dry wt.	Pass
Physical Contaminants	TMECC 02.02-C Man Made Inert Removal and Classification: Plastic, Glass and Metal % > 4mm fraction	Combined Total: < 1.0
Physical Contaminants	TMECC 02.02-C Man Made Inert Removal and Classification: Sharps (Sewing needles, straight pins and hypodermic needles) % > 4mm fraction	None Detected

*TMECC refers to "Test Methods for the Examination of Composting and Compost," published by the United States Department of Agriculture and the United States Compost Council (USCC).

Installation

- Prior to compost application, prepare the slope by removing loose rocks, roots, stumps, and other debris greater than 2” in diameter. Prepare the slope area surface by scarifying or track walking/roughening if necessary.
- Select method to apply the compost blanket. A pneumatic blower is most cost effective and most adaptive in applying compost to steep, rough terrain, and hard to reach locations.
- A compost blanket thickness of 1” to 4” should be applied to slopes of 2:1 (H:V) or gentler, based on site-specific conditions. Increase blanket thickness with increased slope steepness and/or during installation during the rainy season (for example, 2” to 3” should be used for a

3:1 slope, while 1" to 2" can be used for a 4:1 slope). Erosion control using a compost blanket is not recommended for slopes greater than 1:1 (H:V).

- For steeper slopes, tackifiers should be utilized and/or other stabilization techniques employed. For example, compost socks or berms can be installed at intervals over the compost blanket (in a similar manner as Fiber Rolls, SE-5).
- Compost socks or berms (or equivalent linear sediment control BMP) should be placed at the top and/or bottom of the slope for additional erosion control performance.
- For optimum vegetation establishment, a blanket thickness of 1" to 2" is recommended. If vegetation establishment is not the primary function of the compost blanket, a thicker blanket may be recommended based on slope or rainfall conditions.
- Evenly distribute compost on the soil surface to the desired blanket thickness (1/2" to 4" as calculated prior based on site conditions and objectives). Even distribution is an important factor in preventing future rill and gully erosion.
- The compost blanket should extend 3 to 6 feet over the top of the shoulder of the slope. A compost sock or compost berm can be used at the top of the slope as an auxiliary technique to prevent runoff from flowing underneath the compost blanket.
- Use additional anchoring and erosion control BMPs in conjunction of the compost blanket as needed.

Costs

The cost associated with a compost blanket is similar to that of a straw mat and generally less expensive than a geotextile blanket (USEPA, 2009). Caltrans has provided a recent estimate for $5,000 to $8,000 per acre for application of an unseeded 1 inch compost blanket (Caltrans Compost Specifications, 2009). Recently obtained vendor costs indicate that proprietary blends of compost that are seeded and contain a nutrient rich "tackifier" can cost approximately $0.35 per square foot, or approximately $15,000 per acre for a 2 inch blanket. Application by hand is more time intensive and likely more costly.

Inspection and Maintenance

- BMPs must be inspected in accordance with General Permit requirements for the associated project type and risk level. It is recommended that at a minimum, BMPs be inspected weekly, prior to forecasted rain events, daily during extended rain events, and after the conclusion of rain events.
- Areas where erosion is evident, another layer of compost should be reapplied as soon as possible. It may be necessary to install an additional type of stormwater BMP at the top of slope or as a slope interrupter to control flow, such as a fiber roll (SE-5) or compost sock (SE-11).
- Care should be exercised to minimize the damage to protected areas while making repairs, as any area damaged will require reapplication of BMPs.
- Limit or prohibit foot traffic to minimize damage to BMP or impede vegetation establishment.

References

An Analysis of Composting as an Environmental Remediation Technology, U.S. Environmental Protection Agency (USEPA), Solid Waste and Emergency Response (5305W), EPA530-R-8-008, 1998.

Characteristics of Compost: Moisture Holding and Water Quality Improvement, Center for Research in Water Resources, Kirchoff, C., Malina, J., and Barrett, M., 2003.

Compost Utilization for Erosion Control, The University of Georgia College of Agricultural and Environmental Sciences, pubs.caes.uga.edu/caespubs/pubcd/B1200.htm, Faucette, B. and Risse, M., 2009.

Demonstration Project Using Yard Debris Compost for Erosion Control, Final Report, presented to Metropolitan Service District, W&H Pacific, 1993.

Erosion and Sediment Control Manual, Oregon Department of Environmental Quality, 2005.

Standard Special Provision 10-1, Erosion Control (Compost Blanket), California Department of Transportation (Caltrans). 2007 Update.

Evaluation of Environmental Benefits and Impacts of Compost and Industry Standard Erosion and Sediment Controls Measures Used in Construction Activities, Dissertation, Institute of Ecology, University of Georgia, Faucette, B., 2004.

Filter Sock Presentation provided at Erosion, Sediment Control and Stormwater Management with Compost BMPs Workshop, U.S. Composting Council 13th Annual Conference and Trade Show, McCoy, S., 2005.

National Pollutant Discharge Elimination System (NPDES), Compost Blankets, U.S. Environmental Protection Agency (USEPA). http://cfpub.epa.gov/npdes/stormwater/menuofbmps/index.cfm?action=factsheet_results&view=specific&bmp=118, 2009.

Standard Specifications for Transportation Materials and Methods of Sampling and Testing Designation M10-03, Compost for Erosion/Sediment Control (Compost Blankets), Provisional, American Association of State Highway Transportation Officials (AASHTO), 2003.

Stormwater Best Management Practices (BMPs) Field Trials of Erosion Control Compost in Reclamation of Rock Quarry Operations, Nonpoint Source Protection Program CWA §319(h), Texas Commission on Environmental Quality, Adams, T., McFarland, A., Hauck, L., Barrett, M., and Eck, B., 2008.

Soil Preparation/Roughening EC-15

Description and Purpose

Soil Preparation/Roughening involves assessment and preparation of surface soils for BMP installation. This can include soil testing (for seed base, soil characteristics, or nutrients), as well as roughening surface soils by mechanical methods (including sheepsfoot rolling, track walking, scarifying, stair stepping, and imprinting) to prepare soil for additional BMPs, or to break up sheet flow. Soil Preparation can also involve tilling topsoil to prepare a seed bed and/or incorporation of soil amendments, to enhance vegetative establishment.

Suitable Applications

Soil preparation: Soil preparation is essential to proper vegetative establishment. In particular, soil preparation (i.e. tilling, raking, and amendment) is suitable for use in combination with any soil stabilization method, including RECPs or sod. Soil preparation should not be confused with roughening.

Roughening: Soil roughening is generally referred to as track walking (sometimes called imprinting) a slope, where treads from heavy equipment run parallel to the contours of the slope and act as mini terraces. Soil preparation is most effective when used in combination with erosion controls. Soil Roughening is suitable for use as a complementary process for controlling erosion on a site. Roughening is not intended to be used as a stand-alone BMP, and should be used with perimeter controls, additional erosion control measures, grade breaks, and vegetative establishment for maximum effectiveness. Roughening is intended to only affect surface soils and should not compromise slope stability or overall compaction. Suitable applications for soil roughening include:

Categories

EC	Erosion Control	☑
SE	Sediment Control	☒
TC	Tracking Control	
WE	Wind Erosion Control	
NS	Non-Stormwater Management Control	
WM	Waste Management and Materials Pollution Control	

Legend:

☑ **Primary Category**

☒ **Secondary Category**

Targeted Constituents

Sediment	☑
Nutrients	
Trash	
Metals	
Bacteria	
Oil and Grease	
Organics	

Potential Alternatives

EC-3 Hydraulic Mulch

EC-5 Soil Binders

EC-7 Geotextiles and Mats

- Along any disturbed slopes, including temporary stockpiles, sediment basins, or compacted soil diversion berms and swales.

- Roughening should be used in combination with hydraulically applied stabilization methods, compost blanket, or straw mulch; but should not be used in combination with RECPs or sod because roughening is intended to leave terraces on the slope.

Limitations

- Preparation and roughening must take place prior to installing other erosion controls (such as hydraulically applied stabilizers) or sediment controls (such as fiber rolls) on the faces of slopes.

- In such cases where slope preparation is minimal, erosion control/revegetation BMPs that do not require extensive soil preparation - such as hydraulic mulching and seeding applications - should be employed.

- Consideration should be given to the type of erosion control BMP that follows surface preparation, as some BMPs are not designed to be installed over various types of tillage/roughening, i.e., RECPs (erosion control blankets) should not be used with soil roughening due to a "bridging" effect, which suspends the blanket above the seed bed.

- Surface roughness has an effect on the amount of mulch material that needs to be applied, which shows up as a general increase in mulch material due to an increase in surface area (Topographic Index -see EC-3 Hydraulic Mulching).

Implementation

- Additional guidance on the comparison and selection of temporary slope stabilization methods is provided in Appendix F of the Handbook.

General

A roughened surface can significantly reduce erosion. Based on tests done at the San Diego State Erosion Research Laboratory, various roughening techniques on slopes can result in a 12 - 76% reduction in the erosion rate versus smooth slopes.

Materials

Minimal materials are required unless amendments and/or seed are added to the soil. The majority of soil roughening/preparation can be done with equipment that is on hand at a normal construction site, such as bull dozers and compaction equipment.

Installation Guidelines

Soil Preparation

- Where appropriate or feasible, soil should be prepared to receive the seed by disking or otherwise scarifying the surface to eliminate crust, improve air and water infiltration and create a more favorable environment for germination and growth.

- Based upon soil testing conducted, apply additional soil amendments (e.g. fertilizers, additional seed) to the soil to help with germination. Follow EC-4, Hydroseeding, when selecting and applying seed and fertilizers.

Cut Slope Roughening:

- Stair-step grade or groove the cut slopes that are steeper than 3:1.
- Use stair-step grading on any erodible material soft enough to be ripped with a bulldozer. Slopes consisting of soft rock with some subsoil are particularly suited to stair-step grading.
- Make the vertical cut distance less than the horizontal distance, and slightly slope the horizontal position of the "step" in toward the vertical wall.
- Do not make individual vertical cuts more than 2 feet (0.6 m) high in soft materials or more than 3 feet (0.9 m) high in rocky materials.
- Groove the slope using machinery to create a series of ridges and depressions that run across the slope, on the contour.

Fill Slope Roughening:

- Place on fill slopes with a gradient steeper than 3:1 in lifts not to exceed 8 inches (0.2 m), and make sure each lift is properly compacted.
- Ensure that the face of the slope consists of loose, uncompacted fill 4-6 inches (0.1-0.2 m) deep.
- Use grooving or tracking to roughen the face of the slopes, if necessary.
- Do not blade or scrape the final slope face.

Roughening for Slopes to be Mowed:

- Slopes which require mowing activities should not be steeper than 3:1.
- Roughen these areas to shallow grooves by track walking, scarifying, sheepsfoot rolling, or imprinting.
- Make grooves close together (less than 10 inches), and not less than 1 inch deep, and perpendicular to the direction of runoff (i.e., parallel to the slope contours).
- Excessive roughness is undesirable where mowing is planned.

Roughening With Tracked Machinery:

- Limit roughening with tracked machinery to soils with a sandy textural component to avoid undue compaction of the soil surface.
- Operate tracked machinery up and down the slope to leave horizontal depressions in the soil. Do not back-blade during the final grading operation.
- Seed and mulch roughened areas as soon as possible to obtain optimum seed germination and growth.

Costs

Costs are based on the additional labor of tracking or preparation of the slope plus the cost of any required soil amendment materials.

Inspection and Maintenance

- BMPs must be inspected in accordance with General Permit requirements for the associated project type and risk level. It is recommended that at a minimum, BMPs be inspected weekly, prior to forecasted rain events, daily during extended rain events, and after the conclusion of rain events.
- Check the seeded slopes for signs of erosion such as rills and gullies. Fill these areas slightly above the original grade, then reseed and mulch as soon as possible.
- Inspect BMPs weekly during normal operations, prior to forecasted rain events, daily during extended rain events, and after the conclusion of rain events.

References

Soil Stabilization BMP Research for Erosion and Sediment Controls: Cost Survey Technical Memorandum, State of California Department of Transportation (Caltrans), July 2007.

Erosion and Sediment Control Manual, Oregon Department of Environmental Quality, February 2005.

Non-Vegetative Stabilization EC-16

Categories

EC	Erosion Control	☑
SE	Sediment Control	☒
TR	Tracking Control	
WE	Wind Erosion Control	☒
NS	Non-Stormwater Management Control	
WM	Waste Management and Materials Pollution Control	

Legend:

☑ **Primary Category**

☒ **Secondary Category**

Targeted Constituents

Sediment	☑
Nutrients	
Trash	
Metals	
Bacteria	
Oil and Grease	
Organics	

Potential Alternatives

None

Description and Purpose

Non-vegetative stabilization methods are used for temporary or permanent stabilization of areas prone to erosion and should be used only where vegetative options are not feasible; examples include:

- Areas of vehicular or pedestrian traffic such as roads or paths;
- Arid environments where vegetation would not provide timely ground coverage, or would require excessive irrigation;
- Rocky substrate, infertile or droughty soils where vegetation would be difficult to establish; and
- Areas where vegetation will not grow adequately within the construction time frame.

There are several non-vegetative stabilization methods and selection should be based on site-specific conditions.

Decomposed Granite (DG) is a permanent erosion protection method that consists of a layer of stabilized decomposed granite placed over an erodible surface.

Degradable Mulches of various types (see EC-3, EC-6, EC-8) can be used for temporary non-vegetative stabilization; examples include straw mulch, compost, wood chips or hydraulic mulch.

Geotextiles and Mats can be used for temporary non-vegetative stabilization (see EC-7). These BMPs are typically manufactured

from degradable or synthetic materials and are designed and specified based on their functional longevity, i.e., how long they will persist and provide erosion protection. All geotextiles and mats should be replaced when they exceed their functional longevity or when permanent stabilization methods are instituted.

Gravel Mulch is a non-degradable erosion control product that is composed of washed and screened coarse to very coarse gravel, 16 mm to 64 mm (0.6" - 2.5"), similar to an AASHTO No. 3 coarse aggregate.

Rock Slope Protection consists of utilizing large rock or rip-rap (4"- 24") to stabilize slopes with a high erosion potential and those subject to scour along waterways.

Soil Binders can be used for temporary non-vegetative stabilization (see EC-5). The key to their use is functional longevity. In most cases, the soil binder will need to be routinely monitored and re-applied to maintain an erosion-resistant coverage.

Suitable Applications

Non-vegetated stabilization methods are suitable for use on disturbed soil areas and on material stockpiles that need to be temporarily or permanently protected from erosion by water and wind. Non-vegetated stabilization should only be utilized when vegetation cannot be established in the required timeframe, due to soil or climactic conditions, or where vegetation may be a potential fire hazard.

Decomposed Granite (DG) and Gravel Mulch are suitable for use in areas where vegetation establishment is difficult, on flat surfaces, trails and pathways, and when used in conjunction with a stabilizer or tackifier, on shallow slopes (i.e., 10:1 [H:V]). DG and gravel can also be used on shallow rocky slopes where vegetation cannot be established for permanent erosion control.

Degradable Mulches can be used to cover and protect soil surfaces from erosion both in temporary and permanent applications. In many cases, the use of mulches by themselves requires routine inspection and re-application. See EC-3 Hydraulic Mulch, EC-6 Straw Mulch, EC-8 Wood Mulch, or EC-14 Compost Blankets for more information.

Geotextiles and Mats can be used as a temporary stand-alone soil stabilization method. Depending on material selection, geotextiles and mats can be a short-term (3 mos – 1 year) or long-term (1-2 years) temporary stabilization method. For more information on geotextiles and mats see EC-7 Geotextiles and Mats.

Rock Slope Protection can be used when the slopes are subject to scour or have a high erosion potential, such as slopes adjacent to flowing waterways or slopes subject to overflow from detention facilities (spillways).

Soil Binders can be used for temporary stabilization of stockpiles and disturbed areas not subject to heavy traffic. See EC-5 Soil Binders for more information.

Limitations

General

- Refer to EC-3, EC-6, EC-8, and EC-14 for limitations on use of mulches. Refer to EC-7 for limitations on use of geotextiles and mats. Refer to EC-5 for limitations on use of Soil Binders.

Decomposed Granite

- Not available in some geographic regions.
- If not tackified, material may be susceptible to erosion even on slight slopes (e.g., 30:1 [H:V]).
- Installed costs may be more expensive than vegetative stabilization methods.

Gravel Mulch

- Availability is limited in some geographic regions.
- If not properly screened and washed, can contain fine material that can erode and/or create dust problems.
- If inadequately sized, material may be susceptible to erosion on sloped areas.
- Pore spaces fill with dirt and debris over time; may provide a growing medium for weeds.

Rock Slope Protection

- Installation is labor intensive.
- Installed costs can be significantly higher than vegetative stabilization methods.
- Rounded stones may not be used on slopes greater than 2:1 [H:V].

Implementation

General

Non-vegetated stabilization should be used in accordance with the following general guidance:

- Should be used in conjunction with other BMPs, including drainage, erosion controls and sediment controls.
- Refer to EC-3, EC-6, EC-8, and EC-14 for implementation details for mulches. Refer to EC-7 for implementation details for geotextiles and mats. Refer to EC-5 for implementation details for soil binders.
- Non-vegetated stabilization measures should be implemented as soon as the disturbance in the areas they are intended to protect has ceased.
- Additional guidance on the comparison and selection of temporary slope stabilization methods is provided in Appendix F of the Handbook.

Decomposed Granite Stabilization

- If used for a road or path should be installed on a prepared base.

- Should be mixed with a stabilizer if used for roads or pathways, or on slope applications.
- Though porous it is recommended to prevent standing water on or next to a decomposed granite road or pathway.

Gravel Mulch

- Should be sized based on slope, rainfall, and upgradient run-on conditions. Stone size should be increased as potential for erosion increases (steeper slopes, high intensity rainfall).
- If permanent, a weed control fabric should be placed prior to installation.
- Should be installed at a minimum 2" depth.
- Should completely cover all exposed surfaces.

Rock Slope Protection

- Rock slope protection installation should follow Caltrans Standard Specification 72-2: Rock Slope Protection. Refer to the specification for rock conformity requirements and installation methods.
- When using rock slope protection, rock size and installation method should be specified by an Engineer.
- A geotextile fabric should be placed prior to installation.

Costs

- Costs are highly variable depending not only on technique chosen, but also on materials chosen within specific techniques. In addition, availability of certain materials will vary by region/location, which will also affect the cost. Costs of mulches, geotextiles and mats, and soil binders are presented in their respective fact sheets. Costs for decomposed granite, gravel mulch stabilization and rock slope protection may be higher depending on location and availability of materials. Caltrans has provided an estimate for gravel mulch of \$10 - \$15/yd^2 in flat areas and \$11 - \$23/yd^2 on side slopes.

Inspection and Maintenance

General

- BMPs must be inspected in accordance with General Permit requirements for the associated project type and risk level. It is recommended that at a minimum, BMPs be inspected weekly, prior to forecasted rain events, daily during extended rain events, and after the conclusion of rain events.
- For permanent installation, require inspection periodically and after major storm events to look for signs of erosion or damage to the stabilization.
- All damage should be repaired immediately.
- Refer to EC-3, EC-6, EC-8, and EC-14 for inspection and maintenance requirements for mulches. Refer to EC-7 for inspection and maintenance requirements for geotextiles and mats. Refer to EC-5 for inspection and maintenance requirements for soil binders.

Decomposed Granite and Gravel Mulch Stabilization

- Rake out and add decomposed granite or gravel as needed to areas subject to rill erosion. Inspect upgradient drainage controls and repair/modify as necessary.
- Should remain stable under loose surface material. Any significant problem areas should be repaired to restore uniformity to the installation.

References

Arid Zone Forestry: A Guide for Field Technicians. Food and Agriculture Organization of the United Nations, 1989.

Design of Roadside Channels with Flexible Linings, Hydraulic Engineering Circular Number 15, Third Edition, Federal Highway Administration, 2007.

Design Standards for Urban Infrastructure - Soft Landscape Design, Department of Territory and Municipal Services - Australian Capital Territory http://www.tams.act.gov.au/work/standards_and_procedures/design_standards_for_urban_infrastructure

Erosion and Sediment Control Handbook: A Guide for Protection of State Waters through the use of Best Management Practices during Land Disturbing Activities, Tennessee Department of Environment and Conservation, 2002.

Gravel Mulch, Landscape Architecture Non-Standard Specification 10-2, California Department of Transportation (Caltrans), http://www.dot.ca.gov/hq/LandArch/roadside/detail-gm.htm

Maine Erosion and Sediment Control BMPs, DEPLW0588, Maine Department of Environmental Protection: Bureau of Land and Water Quality, 2003.

National Menu of Best Management Practices, US Environmental Protection Agency, 2006.

Standard Specification 72-2: Rock Slope Protection. California Department of Transportation, 2006.

Stormwater Quality Handbooks Construction Site Best Management Practices (BMPs) Manual, State of California Department of Transportation (Caltrans), March 2003.

Silt Fence SE-1

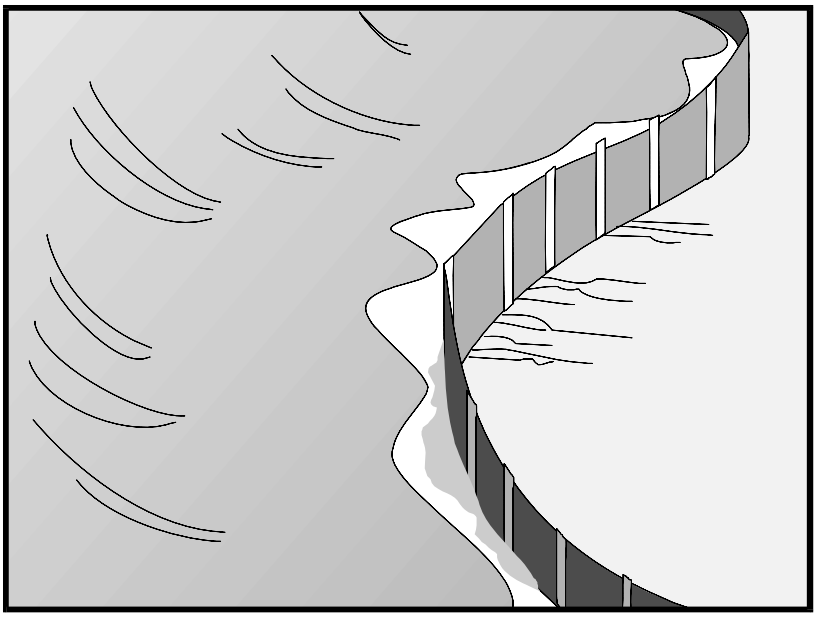

Categories

EC	Erosion Control	
SE	Sediment Control	☑
TC	Tracking Control	
WE	Wind Erosion Control	
NS	Non-Stormwater Management Control	
WM	Waste Management and Materials Pollution Control	

Legend:

☑ **Primary Category**

☒ **Secondary Category**

Targeted Constituents

Sediment	☑
Nutrients	
Trash	
Metals	
Bacteria	
Oil and Grease	
Organics	

Potential Alternatives

SE-5 Fiber Rolls

SE-6 Gravel Bag Berm

SE-8 Sandbag Barrier

SE-10 Storm Drain Inlet Protection

SE-14 Biofilter Bags

Description and Purpose

A silt fence is made of a woven geotextile that has been entrenched, attached to supporting poles, and sometimes backed by a plastic or wire mesh for support. The silt fence detains sediment-laden water, promoting sedimentation behind the fence.

Suitable Applications

Silt fences are suitable for perimeter control, placed below areas where sheet flows discharge from the site. They could also be used as interior controls below disturbed areas where runoff may occur in the form of sheet and rill erosion and around inlets within disturbed areas (SE-10). Silt fences are generally ineffective in locations where the flow is concentrated and are only applicable for sheet or overland flows. Silt fences are most effective when used in combination with erosion controls. Suitable applications include:

- Along the perimeter of a project.
- Below the toe or down slope of exposed and erodible slopes.
- Along streams and channels.
- Around temporary spoil areas and stockpiles.
- Around inlets.
- Below other small cleared areas.

Limitations

- Do not use in streams, channels, drain inlets, or anywhere flow is concentrated.
- Do not use in locations where ponded water may cause a flooding hazard. Runoff typically ponds temporarily on the upstream side of silt fence.
- Do not use silt fence to divert water flows or place across any contour line. Fences not constructed on a level contour, or fences used to divert flow will concentrate flows resulting in additional erosion and possibly overtopping or failure of the silt fence.
- Improperly installed fences are subject to failure from undercutting, overtopping, or collapsing.
- Not effective unless trenched and keyed in.
- Not intended for use as mid-slope protection on slopes greater than 4:1 (H:V).
- Do not use on slopes subject to creeping, slumping, or landslides.

Implementation

General

A silt fence is a temporary sediment barrier consisting of woven geotextile stretched across and attached to supporting posts, trenched-in, and, depending upon the strength of fabric used, supported with plastic or wire mesh fence. Silt fences trap sediment by intercepting and detaining small amounts of sediment-laden runoff from disturbed areas in order to promote sedimentation behind the fence.

The following layout and installation guidance can improve performance and should be followed:

- Use principally in areas where sheet flow occurs.
- Install along a level contour, so water does not pond more than 1.5 ft at any point along the silt fence.
- The maximum length of slope draining to any point along the silt fence should be 200 ft or less.
- The maximum slope perpendicular to the fence line should be 1:1.
- Provide sufficient room for runoff to pond behind the fence and to allow sediment removal equipment to pass between the silt fence and toes of slopes or other obstructions. About 1200 ft^2 of ponding area should be provided for every acre draining to the fence.
- Turn the ends of the filter fence uphill to prevent stormwater from flowing around the fence.
- Leave an undisturbed or stabilized area immediately down slope from the fence where feasible.

- Silt fences should remain in place until the disturbed area is permanently stabilized, after which, the silt fence should be removed and properly disposed.
- Silt fence should be used in combination with erosion source controls up slope in order to provide the most effective sediment control.
- Be aware of local regulations regarding the type and installation requirements of silt fence, which may differ from those presented in this fact sheet.

Design and Layout

The fence should be supported by a plastic or wire mesh if the fabric selected does not have sufficient strength and bursting strength characteristics for the planned application (as recommended by the fabric manufacturer). Woven geotextile material should contain ultraviolet inhibitors and stabilizers to provide a minimum of six months of expected usable construction life at a temperature range of 0 °F to 120 °F.

- Layout in accordance with attached figures.
- For slopes steeper than 2:1 (H:V) and that contain a high number of rocks or large dirt clods that tend to dislodge, it may be necessary to install additional protection immediately adjacent to the bottom of the slope, prior to installing silt fence. Additional protection may be a chain link fence or a cable fence.
- For slopes adjacent to sensitive receiving waters or Environmentally Sensitive Areas (ESAs), silt fence should be used in conjunction with erosion control BMPs.

Standard vs. Heavy Duty Silt Fence

Standard Silt Fence

- Generally applicable in cases where the slope of area draining to the silt fence is 4:1 (H:V) or less.
- Used for shorter durations, typically 5 months or less
- Area draining to fence produces moderate sediment loads.

Heavy Duty Silt Fence

- Use is generally limited to 8 months or less.
- Area draining to fence produces moderate sediment loads.
- Heavy duty silt fence usually has 1 or more of the following characteristics, not possessed by standard silt fence.
  - Fence fabric has higher tensile strength.
  - Fabric is reinforced with wire backing or additional support.
  - Posts are spaced closer than pre-manufactured, standard silt fence products.
  - Posts are metal (steel or aluminum)

Materials

<u>Standard Silt Fence</u>

- Silt fence material should be woven geotextile with a minimum width of 36 in. and a minimum tensile strength of 100 lb force. The fabric should conform to the requirements in ASTM designation D4632 and should have an integral reinforcement layer. The

reinforcement layer should be a polypropylene, or equivalent, net provided by the manufacturer. The permittivity of the fabric should be between 0.1 sec^{-1} and 0.15 sec^{-1} in conformance with the requirements in ASTM designation D4491.

- Wood stakes should be commercial quality lumber of the size and shape shown on the plans. Each stake should be free from decay, splits or cracks longer than the thickness of the stake or other defects that would weaken the stakes and cause the stakes to be structurally unsuitable.

- Staples used to fasten the fence fabric to the stakes should be not less than 1.75 in. long and should be fabricated from 15 gauge or heavier wire. The wire used to fasten the tops of the stakes together when joining two sections of fence should be 9 gauge or heavier wire. Galvanizing of the fastening wire will not be required.

Heavy-Duty Silt Fence

- Some silt fence has a wire backing to provide additional support, and there are products that may use prefabricated plastic holders for the silt fence and use metal posts or bar reinforcement instead of wood stakes. If bar reinforcement is used in lieu of wood stakes, use number four or greater bar. Provide end protection for any exposed bar reinforcement for health and safety purposes.

Installation Guidelines – Traditional Method

Silt fences are to be constructed on a level contour. Sufficient area should exist behind the fence for ponding to occur without flooding or overtopping the fence.

- A trench should be excavated approximately 6 in. wide and 6 in. deep along the line of the proposed silt fence (trenches should not be excavated wider or deeper than necessary for proper silt fence installation).

- Bottom of the silt fence should be keyed-in a minimum of 12 in.

- Posts should be spaced a maximum of 6 ft apart and driven securely into the ground a minimum of 18 in. or 12 in. below the bottom of the trench.

- When standard strength geotextile is used, a plastic or wire mesh support fence should be fastened securely to the upslope side of posts using heavy–duty wire staples at least 1 in. long. The mesh should extend into the trench.

- When extra-strength geotextile and closer post spacing are used, the mesh support fence may be eliminated.

- Woven geotextile should be purchased in a long roll, then cut to the length of the barrier. When joints are necessary, geotextile should be spliced together only at a support post, with a minimum 6 in. overlap and both ends securely fastened to the post.

- The trench should be backfilled with native material and compacted.

- Construct silt fences with a setback of at least 3 ft from the toe of a slope. Where, due to specific site conditions, a 3 ft setback is not available, the silt fence may be constructed at the

toe of the slope, but should be constructed as far from the toe of the slope as practicable. Silt fences close to the toe of the slope will be less effective and more difficult to maintain.

- Construct the length of each reach so that the change in base elevation along the reach does not exceed 1/3 the height of the barrier; in no case should the reach exceed 500 ft.
- Cross barriers should be a minimum of $^1/_3$ and a maximum of ½ the height of the linear barrier.
- See typical installation details at the end of this fact sheet.

Installation Guidelines - Static Slicing Method

- Static Slicing is defined as insertion of a narrow blade pulled behind a tractor, similar to a plow blade, at least 10 inches into the soil while at the same time pulling silt geotextile fabric into the ground through the opening created by the blade to the depth of the blade. Once the gerotextile is installed, the soil is compacted using tractor tires.
- This method will not work with pre-fabricated, wire backed silt fence.
- Benefits:
    - Ease of installation (most often done with a 2 person crew). In addition, installation using static slicing has been found to be more efficient on slopes, in rocky soils, and in saturated soils.
    - Minimal soil disturbance.
    - Greater level of compaction along fence, leading to higher performance (i.e. greater sediment retention).
    - Uniform installation.
    - Less susceptible to undercutting/undermining.

Costs

- It should be noted that costs vary greatly across regions due to available supplies and labor costs.
- Average annual cost for installation using the traditional silt fence installation method (assumes 6 month useful life) is $7 per linear foot based on vendor research. Range of cost is $3.50 - $9.10 per linear foot.
- In tests, the slicing method required 0.33 man hours per 100 linear feet, while the trenched based systems required as much as 1.01 man hours per linear foot.

Inspection and Maintenance

- BMPs must be inspected in accordance with General Permit requirements for the associated project type and risk level. It is recommended that at a minimum, BMPs be inspected weekly, prior to forecasted rain events, daily during extended rain events, and after the conclusion of rain events.
- Repair undercut silt fences.

- Repair or replace split, torn, slumping, or weathered fabric. The lifespan of silt fence fabric is generally 5 to 8 months.
- Silt fences that are damaged and become unsuitable for the intended purpose should be removed from the site of work, disposed, and replaced with new silt fence barriers.
- Sediment that accumulates in the BMP should be periodically removed in order to maintain BMP effectiveness. Sediment should be removed when the sediment accumulation reaches one-third of the barrier height.
- Silt fences should be left in place until the upstream area is permanently stabilized. Until then, the silt fence should be inspected and maintained regularly.
- Remove silt fence when upgradient areas are stabilized. Fill and compact post holes and anchor trench, remove sediment accumulation, grade fence alignment to blend with adjacent ground, and stabilize disturbed area.

References

Manual of Standards of Erosion and Sediment Control Measures, Association of Bay Area Governments, May 1995.

National Management Measures to Control Nonpoint Source Pollution from Urban Areas, United States Environmental Protection Agency, 2002.

Proposed Guidance Specifying Management Measures for Sources of Nonpoint Pollution in Coastal Waters, Work Group-Working Paper, USEPA, April 1992.

Sedimentation and Erosion Control Practices, and Inventory of Current Practices (Draft), UESPA, 1990.

Southeastern Wisconsin Regional Planning Commission (SWRPC). Costs of Urban Nonpoint Source Water Pollution Control Measures. Technical Report No. 31. Southeastern Wisconsin Regional Planning Commission, Waukesha, WI. 1991

Stormwater Quality Handbooks - Construction Site Best Management Practices (BMPs) Manual, State of California Department of Transportation (Caltrans), March 2003.

Stormwater Management Manual for The Puget Sound Basin, Washington State Department of Ecology, Public Review Draft, 1991.

U.S. Environmental Protection Agency (USEPA). Stormwater Management for Industrial Activities: Developing Pollution Prevention Plans and Best Management Practices. U.S. Environmental Protection Agency, Office of Water, Washington, DC, 1992.

Water Quality Management Plan for the Lake Tahoe Region, Volume II, Handbook of Management Practices, Tahoe Regional Planning Agency, November 1988.Soil Stabilization BMP Research for Erosion and Sediment Controls: Cost Survey Technical Memorandum, State of California Department of Transportation (Caltrans), July 2007.

Erosion and Sediment Control Manual, Oregon Department of Environmental Quality, February 2005.

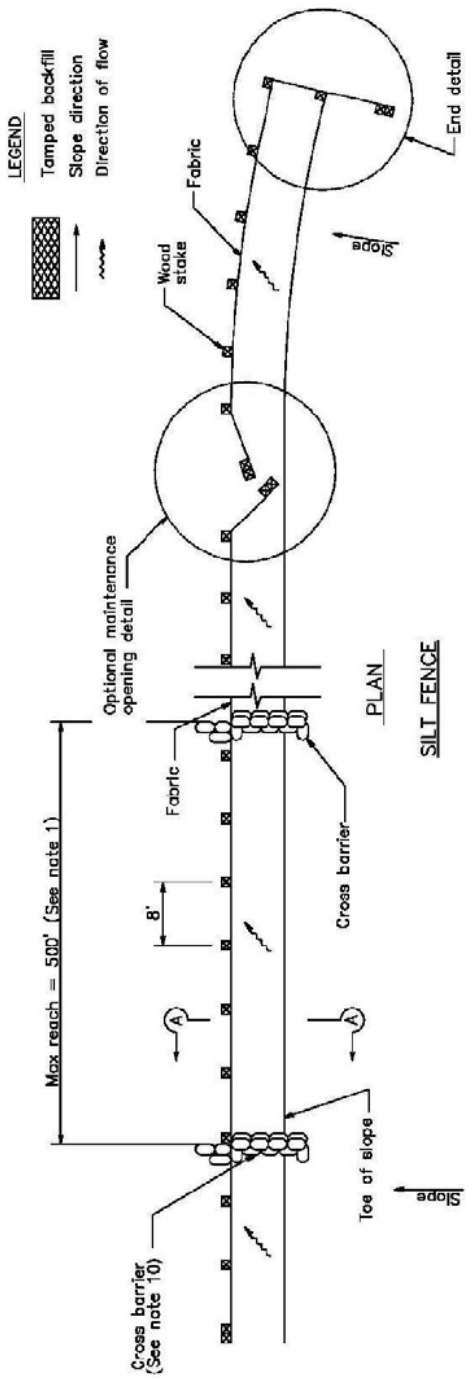

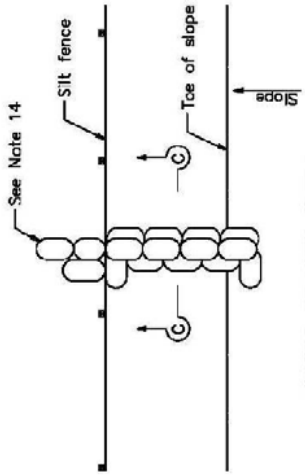

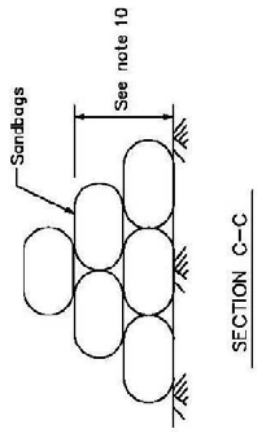

NOTES

1. Construct the length of each reach so that the change in base elevation along the reach does not exceed 1/3 the height of the linear barrier, in no case shall the reach length exceed 500'.
2. The last 8'–0" of fence shall be turned up slope.
3. Stake dimensions are nominal.
4. Dimension may vary to fit field condition.
5. Stakes shall be spaced at 8'–0" maximum and shall be positioned on downstream side of fence.
6. Stakes to overlap and fence fabric to fold around each stake one full turn. Secure fabric to stake with 4 staples.
7. Stakes shall be driven tightly together to prevent potential flow–through of sediment at joint. The tops of the stakes shall be secured with wire.
8. For end stake, fence fabric shall be folded around two stakes one full turn and secured with 4 staples.
9. Minimum 4 staples per stake. Dimensions shown are typical.
10. Cross barriers shall be a minimum of 1/3 and a maximum of 1/2 the height of the linear barrier.
11. Maintenance openings shall be constructed in a manner to ensure sediment remains behind silt fence.
12. Joining sections shall not be placed at sump locations.
13. Sandbag rows and layers shall be offset to eliminate gaps.
14. Add 3–4 bags to cross barrier on downgradient side of silt fence as needed to prevent bypass or undermining and as allowable based on site limits of disturbance.

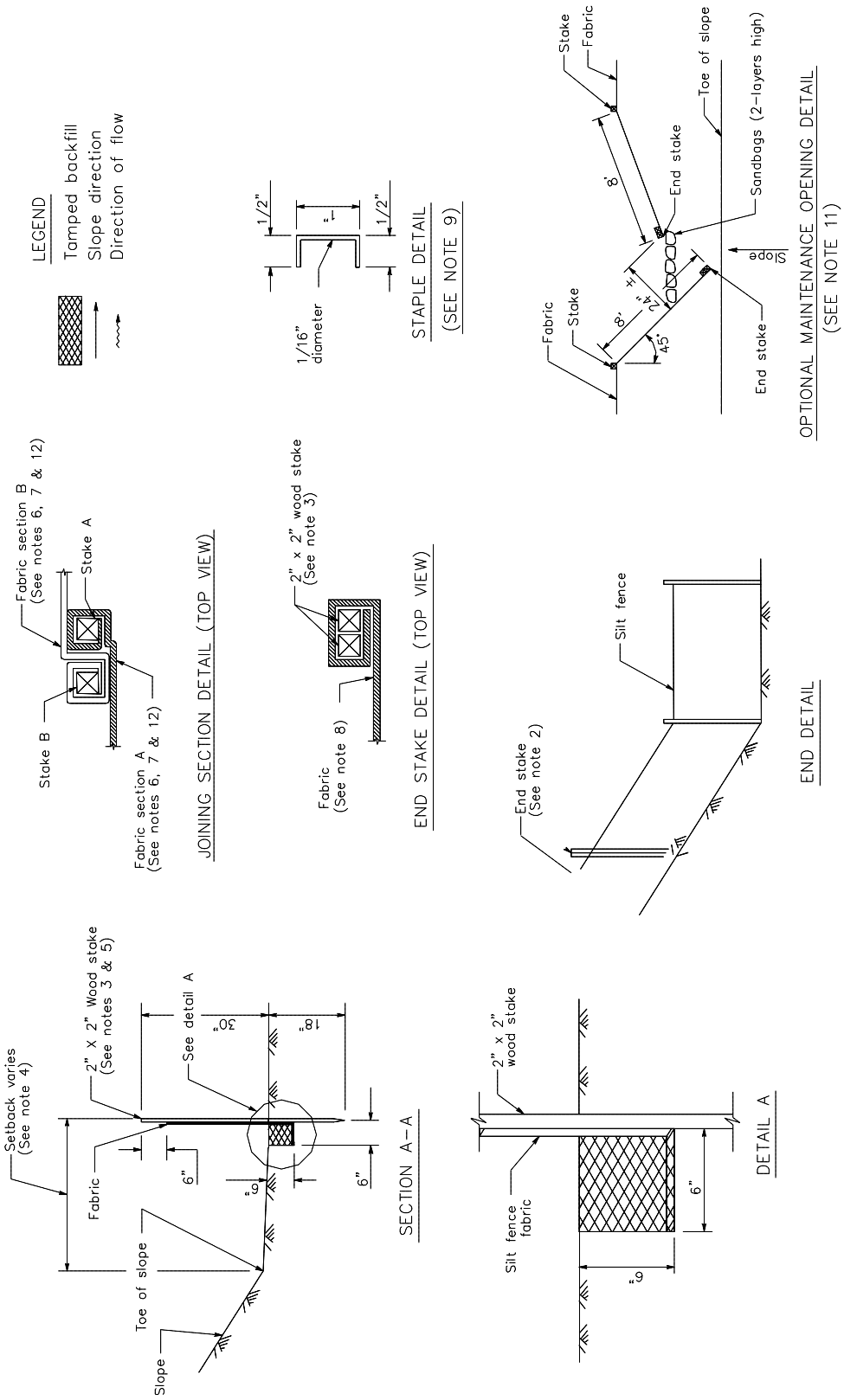
LEGEND
Tamped backfill
Slope direction
Direction of flow
1/2"
1"
1/2"
1/16" diameter
STAPLE DETAIL
(SEE NOTE 9)
Stake
Fabric
Toe of slope
Sandbags (2-layers high)
End stake
8'
24"
8'
45°
Slope
Fabric
Stake
End stake
OPTIONAL MAINTENANCE OPENING DETAIL
(SEE NOTE 11)
Fabric section B
(See notes 6, 7 & 12)
Stake A
Stake B
Fabric section A
(See notes 6, 7 & 12)
JOINING SECTION DETAIL (TOP VIEW)
2" x 2" wood stake
(See note 3)
Fabric
(See note 8)
END STAKE DETAIL (TOP VIEW)
Silt fence
End stake
(See note 2)
END DETAIL
Setback varies
(See note 4)
2" X 2" Wood stake
(See notes 3 & 5)
See detail A
30"
18"
Fabric
6"
6"
6"
Toe of slope
Slope
SECTION A-A
2" x 2"
wood stake
Silt fence
fabric
6"
6"
DETAIL A

Sediment Basin SE-2

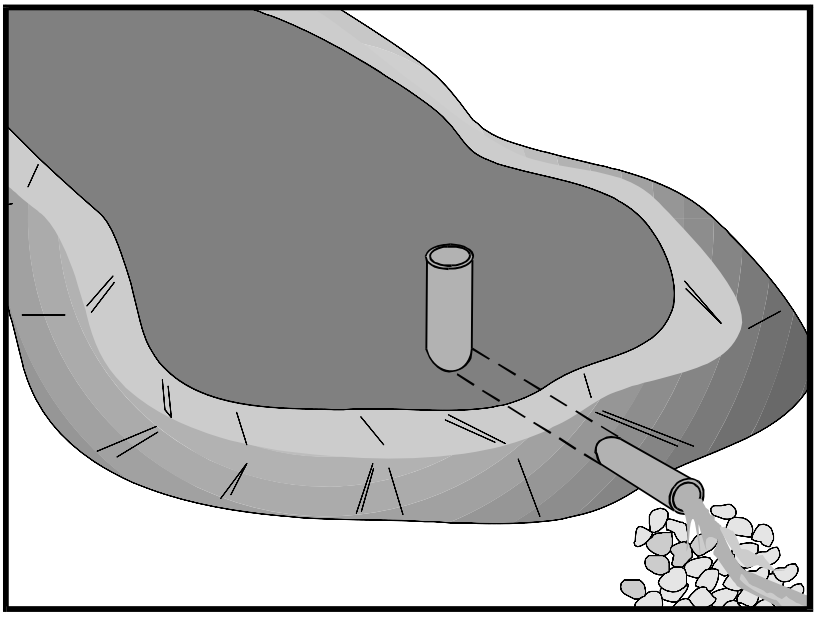

Categories		
EC	Erosion Control	
SE	Sediment Control	☑
TC	Tracking Control	
WE	Wind Erosion Control	
NS	Non-Stormwater Management Control	
WM	Waste Management and Materials Pollution Control	

Legend:

☑ **Primary Category**

☒ **Secondary Category**

Targeted Constituents	
Sediment	☑
Nutrients	
Trash	☑
Metals	
Bacteria	
Oil and Grease	
Organics	

Potential Alternatives

SE-3 Sediment Trap (for smaller areas)

Description and Purpose

A sediment basin is a temporary basin formed by excavation or by constructing an embankment so that sediment-laden runoff is temporarily detained under quiescent conditions, allowing sediment to settle out before the runoff is discharged.

Sediment basin design guidance presented in this fact sheet is intended to provide options, methods, and techniques to optimize temporary sediment basin performance and basin sediment removal. Basin design guidance provided in this fact sheet is not intended to guarantee basin effluent compliance with numeric discharge limits (numeric action levels or numeric effluent limits for turbidity). Compliance with discharge limits requires a thoughtful approach to comprehensive BMP planning, implementation, and maintenance. Therefore, optimally designed and maintained sediment basins should be used in conjunction with a comprehensive system of BMPs that includes:

- Diverting runoff from undisturbed areas away from the basin
- Erosion control practices to minimize disturbed areas on-site
  and to provide temporary stabilization and interim sediment controls (e.g., stockpile perimeter control, check dams, perimeter controls around individual lots) to reduce the basin's influent sediment concentration.

At some sites, sediment basin design enhancements may be required to adequately remove sediment. Traditional

(aka "physical") enhancements such as alternative outlet configurations or flow deflection baffles increase detention time and other techniques such as outlet skimmers preferentially drain flows with lower sediment concentrations. These "physical" enhancement techniques are described in this fact sheet. To further enhance sediment removal particularly at sites with fine soils or turbidity sensitive receiving waters, some projects may need to consider implementing Active Treatment Systems (ATS) whereby coagulants and flocculants are used to enhance settling and removal of suspended sediments. Guidance on implementing ATS is provided in SE-11.

Suitable Applications

Sediment basins may be suitable for use on larger projects with sufficient space for constructing the basin. Sediment basins should be considered for use:

- Where sediment-laden water may enter the drainage system or watercourses
- On construction projects with disturbed areas during the rainy season
- At the outlet of disturbed watersheds between 5 acres and 75 acres and evaluated on a site by site basis
- Where post construction detention basins are required
- In association with dikes, temporary channels, and pipes used to convey runoff from disturbed areas

Limitations

Sediment basins must be installed only within the property limits and where failure of the structure will not result in loss of life, damage to homes or buildings, or interruption of use or service of public roads or utilities. In addition, sediment basins are attractive to children and can be very dangerous. Local ordinances regarding health and safety must be adhered to. If fencing of the basin is required, the type of fence and its location should be shown in the SWPPP and in the construction specifications.

- As a general guideline, sediment basins are suitable for drainage areas of 5 acres or more, but not appropriate for drainage areas greater than 75 acres. However, the tributary area should be evaluated on a site by site basis.
- Sediment basins may become an "attractive nuisance" and care must be taken to adhere to all safety practices. If safety is a concern, basin may require protective fencing.
- Sediment basins designed according to this fact sheet are only effective in removing sediment down to about the silt size fraction. Sediment-laden runoff with smaller size fractions (fine silt and clay) may not be adequately treated unless chemical (or other appropriate method) treatment is used in addition to the sediment basin.
- Basins with a height of 25 ft or more or an impounding capacity of 50 ac-ft or more must obtain approval from California Department of Water Resources Division of Safety of Dams (http://www.water.ca.gov/damsafety/).

- Water that stands in sediment basins longer than 96 hours may become a source of mosquitoes (and midges), particularly along perimeter edges, in shallow zones, in scour or below-grade pools, around inlet pipes, along low-flow channels, and among protected habitats created by emergent or floating vegetation (e.g. cattails, water hyacinth), algal mats, riprap, etc.
- Basins require large surface areas to permit settling of sediment. Size may be limited by the available area.

Implementation

General

A sediment basin is a controlled stormwater release structure formed by excavation or by construction of an embankment of compacted soil across a drainage way, or other suitable location. It is intended to trap sediment before it leaves the construction site. The basin is a temporary measure expected to be used during active construction in most cases and is to be maintained until the site area is permanently protected against erosion or a permanent detention basin is constructed.

Sediment basins are suitable for nearly all types of construction projects. Whenever possible, construct the sediment basins before clearing and grading work begins. Basins should be located at the stormwater outlet from the site but not in any natural or undisturbed stream. A typical application would include temporary dikes, pipes, and/or channels to convey runoff to the basin inlet.

Many development projects in California are required by local ordinances to provide a stormwater detention basin for post-construction flood control, desilting, or stormwater pollution control. A temporary sediment basin may be constructed by rough grading the post-construction control basins early in the project.

Sediment basins if properly designed and maintained can trap a significant amount of the sediment that flows into them. However, traditional basins do not remove all inflowing sediment. Therefore, they should be used in conjunction with erosion control practices such as temporary seeding, mulching, diversion dikes, etc., to reduce the amount of sediment flowing into the basin.

Planning

To improve the effectiveness of the basin, it should be located to intercept runoff from the largest possible amount of disturbed area. Locations best suited for a sediment basin are generally in lower elevation areas of the site (or basin tributary area) where site drainage would not require significant diversion or other means to direct water to the basin but outside jurisdictional waterways. However, as necessary, drainage into the basin can be improved by the use of earth dikes and drainage swales (see BMP EC-9). . The basin should not be located where its failure would result in the loss of life or interruption of the use or service of public utilities or roads.

Construct before clearing and grading work begins when feasible.

- Do not locate the basin in a jurisdictional stream.

- Basin sites should be located where failure of the structure will not cause loss of life, damage to homes or buildings, or interruption of use or service of public roads or utilities.
- Basins with a height of 25 ft or more or an impounding capacity of 50 ac-ft must obtain approval from the Division of Dam Safety. Local dam safety requirements may be more stringent.
- Limit the contributing area to the sediment basin to only the runoff from the disturbed soil areas. Use temporary concentrated flow conveyance controls to divert runoff from undisturbed areas away from the sediment basin.
- The basin should be located: (1) by excavating a suitable area or where a low embankment can be constructed across a swale, (2) where post-construction (permanent) detention basins will be constructed, and (3) where the basins can be maintained on a year-round basis to provide access for maintenance, including sediment removal and sediment stockpiling in a protected area, and to maintain the basin to provide the required capacity.

Design

When designing a sediment basin, designers should evaluate the site constraints that could affect the efficiency of the BMP. Some of these constraints include: the relationship between basin capacity, anticipated sediment load, and freeboard, available footprint for the basin, maintenance frequency and access, and hydraulic capacity and efficiency of the temporary outlet infrastructure. Sediment basins should be designed to maximize sediment removal and to consider sediment load retained by the basin as it affects basin performance.

Three Basin Design Options (Part A) are presented below along with a Typical Sediment/Detention Basin Design Methodology (Part B). Regardless of the design option that is selected, designers also need to evaluate the sediment basin capacity with respect to sediment accumulation (See "*Step 3. Evaluate the Capacity of the Sediment Basin"),* and should incorporate approaches identified in "*Step 4. Other Design Considerations*" to enhance basin performance.

A) Basin Design Options:

Option 1:

Design sediment basin(s) using the standard equation:

$$A_s = \frac{1.2Q}{V_s} \qquad \text{(Eq. 1)}$$

Where:

A_s = Minimum surface area for trapping soil particles of a certain size

V_s = Settling velocity of the design particle size chosen (V_s = 0.00028 ft/s for a design particle size of 0.01 mm at 68°F)

1.2 = Factor of safety recommended by USEPA to account for the reduction in basin efficiency caused due to turbulence and other non ideal conditions.

$Q = CIA$ (Eq.2)

Where

Q = Discharge rate measured in cubic feet per second

C = Runoff coefficient (unitless)

I = Peak rainfall intensity for the 10-year, 6-hour rain event (in/hr)

A = Area draining into the sediment basin in acres

The design particle size should be the smallest soil grain size determined by wet sieve analysis, or the fine silt sized (0.01 mm [or 0.0004 in.]) particle, and the Vs used should be 100 percent of the calculated settling velocity.

This sizing basin method is dependent on the outlet structure design or the total basin length with an appropriate outlet. If the designer chooses to utilize the outlet structure to control the flow duration in the basin, the basin length (distance between the inlet and the outlet) should be a minimum of twice the basin width; the depth should not be less than 3 ft nor greater than 5 ft for safety reasons and for maximum efficiency (2 ft of sediment storage, 2 ft of capacity). If the designer chooses to utilize the basin length (with appropriate basin outlet) to control the flow duration in the basin, the basin length (distance between the inlet and the outlet) should be a specifically designed to capture 100% of the design particle size; the depth should not be less than 3 ft nor greater than 5 ft for safety reasons and for maximum efficiency (2 ft of sediment storage, 2 ft of capacity).

The basin should be located on the site where it can be maintained on a year-round basis and should be maintained on a schedule to retain the 2 ft of capacity.

Option 2:

Design pursuant to local ordinance for sediment basin design and maintenance, provided that the design efficiency is as protective or more protective of water quality than Option 1.

Option 3:

The use of an equivalent surface area design or equation provided that the design efficiency is as protective or more protective of water quality than Option 1.

B) Typical Sediment/Detention Basin Design Methodology:

Design of a sediment basin requires the designer to have an understanding of the site constraints, knowledge of the local soil (e.g., particle size distribution of potentially contributing soils), drainage area of the basin, and local hydrology. Designers should not assume that a sediment basin for location A is applicable to location B. Therefore, designers can use this factsheet as guidance but will need to apply professional judgment and knowledge of the site to design an effective and efficient sediment basin. The following provides a general overview of typical design methodologies:

Step 1. Hydrologic Design

- Evaluate the site constraints and assess the drainage area for the sediment basin. Designers should consider on- and off-site flows as well as changes in the drainage area associated with site construction/disturbance. To minimize additional construction during the course of the project, the designer should consider identifying the maximum drainage area when calculating the basin dimensions.

- If a local hydrology manual is not available it is recommended to follow standard rational method procedures to estimate discharge. The references section of this factsheet provides a reference to standard hydrology textbooks that can provide standard methodologies. If local rainfall depths are not available, values can be obtained from standard precipitation frequency maps from NOAA (downloaded from http://www.wrcc.dri.edu/pcpnfreq.html).

Step 2. Hydraulic Design

- Calculate the surface area required for the sediment basin using Equation 1. In which discharge is estimated for a 10-yr 6-hr event using rational method procedure listed in local hydrology manual and Vs is estimated using Stokes Law presented in Equation 3.

$$V_s = 2.81d^2 \qquad \text{(Eq.3)}$$

Where

V_s = Settling velocity in feet per second at 68˚F

d = diameter of sediment particle in millimeters (smallest soil grain size determined by wet sieve analysis or fine silt (0.01 mm [or 0.0004 in.])

- In general the basin outlet design requires an iterative trial and error approach that considered the maximum water surface elevation, the elevation versus volume (stage-storage) relationship, the elevation verses discharge (stage-discharge) relationship, and the estimated inflow hydrograph. To adequately design the basins to settle sediment, the outlet configuration and associated outflow rates can be estimated by numerous methodologies. The following provides some guidance for design the basin outlet:

  - An outlet should have more than one orifice.

  - An outlet design typically utilizes multiple horizontal rows of orifices (approximately 3 or more) with at least 2 orifices per row (see Figures 1 and 2 at the end of this fact sheet).

  - Orifices can vary in shape.

  - Select the appropriate orifice diameter and number of perforations per row with the objective of minimizing the number of rows while maximizing the detention time.

- The diameter of each orifice is typically a maximum of 3-4 inches and a minimum of 0.25-0.5 inches.
- If a rectangular orifice is used, it is recommended to have minimum height of 0.5 inches and a maximum height of 6 inches.
- Rows are typically spaced at three times the diameter center to center vertically with a minimum distance of approximately 4 inches on center and a maximum distance of 1 foot on center.
- To estimate the outflow rate, each row is calculated separately based on the flow through a single orifice then multiplied by the number of orifices in the row. This step is repeated for each of the rows. Once all of the orifices are estimated, the total outflow rate versus elevation (stage-discharge curve) is developed to evaluate the detention time within the basin.
- Flow through a single orifice can be estimated using an Equation 4:

$$Q = BC' A(2gH)^{0.5} \qquad \text{(Eq.4)}$$

Where
Q = Discharge in ft^3/s
C′ = Orifice coefficient (unitless)
A = Area of the orifice (ft^2)
g = acceleration due to gravity (ft^3/s)
H = Head above the orifice (ft)
B = Anticipated Blockage or clogging factor (unitless), It is dependent on anticipated sediment and debris load, trash rack configuration etc, so the value is dependent on design engineers professional judgment and/or local requirements (B is never greater than 1 and a value of 0.5 is generally used)

  - Care must be taken in the selection of orifice coefficient ("C′"); 0.60 is most often recommended and used. However, based on actual tests, Young and Graziano (1989), "Outlet Hydraulics of Extended Detention Facilities for Northern Virginia Planning District Commission", recommends the following:
    - C′ = 0.66 for thin materials; where the thickness is equal to or less than the orifice diameter, or
    - C′ = 0.80 when the material is thicker than the orifice diameter
- If different sizes of orifices are used along the riser then they have to be sized such that not more than 50 percent of the design storm event drains in one-third of the drawdown time (to provide adequate settling time for events smaller than the design storm event) and the entire volume drains within 96 hours or as regulated by the local vector control agency. If a basin fails to drain within 96 hours, the basin must be pumped dry.

- Because basins are not maintained for infiltration, water loss by infiltration should be disregarded when designing the hydraulic capacity of the outlet structure.

- Floating Outlet Skimmer: The floating skimmer (see Figure 3 at the end of this fact sheet is an alternative outlet configuration (patented) that drains water from upper portion of the water column. This configuration has been used for temporary and permanent basins and can improve basin performance by eliminating bottom orifices which have the potential of discharging solids. Some design considerations for this alternative outlet device includes the addition of a sand filter or perforated under drain at the low point in the basin and near the floating skimmer. These secondary drains allow the basin to fully drain. More detailed guidelines for sizing the skimmer can be downloaded from http://www.fairclothskimmer.com/.

- Hold and Release Valve: An ideal sediment/detention basin would hold all flows to the design storm level for sufficient time to settle solids, and then slowly release the storm water. Implementing a reliable valve system for releasing detention basins is critical to eliminate the potential for flooding in such a system. Some variations of hold and release valves include manual valves, bladder devices or electrically operated valves. When a precipitation event is forecast, the valve would be close for the duration of the storm and appropriate settling time. When the settling duration is met (approximately 24 or 48 hours), the valve would be opened and allow the stormwater to be discharged at a rate that does not resuspend settled solids and in a non-erosive manner. If this type of system is used the valve should be designed to empty the entire basin within 96 hours or as stipulated by local vector control regulations.

Step 3. Evaluate the Capacity of the Sediment Basin

- Typically, sediment basins do not perform as designed when they are not properly maintained or the sediment yield to the basin is larger than expected. As part of a good sediment basin design, designers should consider maintenance cycles, estimated soil loss and/or sediment yield, and basin sediment storage volume. The two equations below can be used to quantify the amount of soil entering the basin.

- The Revised Universal Soil Loss Equation (RUSLE, Eq.5) can be used to estimate annual soil loss and the Modified Universal Soil Equation (MUSLE, Eq.6) can be used to estimate sediment yield from a single storm event.

$$A = R \times K \times LS \times C \times P \qquad \text{(Eq.5)}$$

$$Y = 95\left(Q \times q_p\right)^{0.56} \times K \times LS \times C \times P \qquad \text{(Eq.6)}$$

Where:

A = annual soil loss, tons/acre-year

R = rainfall erosion index, in 100 ft.tons/acre.in/hr

K = soil erodibility factor, tons/acre per unit of R

LS = slope length and steepness factor (unitless)

C = vegetative cover factor (unitless)

P = erosion control practice factor (unitless)

Y = single storm sediment yield in tons

Q = runoff volume in acre-feet

q_p = peak flow in cfs

- Detailed descriptions and methodologies for estimating the soil loss can be obtained from standard hydrology text books (See References section).
- Determination of the appropriate equation should consider construction duration and local environmental factors (soils, hydrology, etc.). For example, if a basin is planned for a project duration of 1 year and the designer specifies one maintenance cycle, RUSLE could be used to estimate the soil loss and thereby the designer could indicate that the sediment storage volume would be half of the soil loss value estimated. As an example for use of MUSLE, a project may have a short construction duration thereby requiring fewer maintenance cycles and a reduced sediment storage volume. MUSLE would be used to estimate the anticipated soil loss based on a specific storm event to evaluate the sediment storage volume and appropriate maintenance frequency.
- The soil loss estimates are an essential step in the design and it is essential that the designer provide construction contractors with enough information to understand maintenance frequency and/or depths within the basin that would trigger maintenance. Providing maintenance methods, frequency and specification should be included in design bid documents such as the SWPPP Site Map.
- Once the designer has quantified the amount of soil entering the basin, the depth required for sediment storage can be determined by dividing the estimated sediment loss by the surface area of the basin.

Step 4. Other Design Considerations

- Consider designing the volume of the settling zone for the total storm volume associated with the 2-year event or other appropriate design storms specified by the local agency. This volume can be used as a guide for sizing the basin without iterative routing calculations. The depth of the settling zone can be estimated by dividing the estimated 2-yr storm volume by the surface area of the basin.
- The basin volume consists of two zones:
  - A sediment storage zone at least 1 ft deep.
  - A settling zone at least 2 ft deep.
  - The basin depth must be no less than 3 ft (not including freeboard).
- Proper hydraulic design of the outlet is critical to achieving the desired performance of the basin. The outlet should be designed to drain the basin within 24 to 96 hours (also referred

to as "drawdown time"). The 24-hour limit is specified to provide adequate settling time; the 96-hour limit is specified to mitigate vector control concerns.

- Confirmation of the basin performance can be evaluated by routing the design storm (10-yr 6-hr, or as directed by local regulations) through the basin based on the basin volume (stage-storage curve) and the outlet design (stage-discharge curve based on the orifice configuration or equivalent outlet design).

- Sediment basins, regardless of size and storage volume, should include features to accommodate overflow or bypass flows that exceed the design storm event.

  - Include an emergency spillway to accommodate flows not carried by the principal spillway. The spillway should consist of an open channel (earthen or vegetated) over undisturbed material (not fill) or constructed of a non-erodible riprap (or equivalent protection) on fill slopes.

  - The spillway control section, which is a level portion of the spillway channel at the highest elevation in the channel, should be a minimum of 20 ft in length.

- Rock, vegetation or appropriate erosion control should be used to protect the basin inlet, outlet, and slopes against erosion.

- The total depth of the sediment basin should include the depth required for sediment storage, depth required for settling zone and freeboard of at least 1 foot or as regulated by local flood control agency for a flood event specified by the local agency.

- The basin alignment should be designed such that the length of the basin is more than twice the width of the basin; the length should be determined by measuring the distance between the inlet and the outlet. If the site topography does not allow for this configuration baffles should be installed so that the ratio is satisfied. If a basin has more than one inflow point, any inflow point that conveys more than 30 percent of the total peak inflow rate has to meet the required length to width ratio.

- An alternative basin sizing method proposed by Fifield (2004) can be consulted to estimate an alternative length to width ratio and basin configuration. These methods can be considered as part of Option 3 which allows for alternative designs that are protective or more protective of water quality.

- Baffles (see Figure 4 at the end of this fact sheet) can be considered at project sites where the existing topography or site constraints limit the length to width ratio. Baffles should be constructed of earthen berms or other structural material within the basin to divert flow in the basin, thus increasing the effective flow length from the basin inlet to the outlet riser. Baffles also reduce the change of short circuiting and allows for settling throughout the basin.

- Baffles are typically constructed from the invert of the basin to the crest of the emergency spillway (i.e., design event flows are meant to flow around the baffles and flows greater than the design event would flow over the baffles to the emergency spillway).

- Use of other materials for construction of basin baffles (such as silt fence) may not be appropriate based on the material specifications and will require frequent maintenance (maintain after every storm event). Maintenance may not be feasible when required due to flooded conditions resulting from frequent (i.e., back to back) storm events. Use of alternative baffle materials should not deviate from the intended purpose of the material, as described by the manufacturer.
- Sediment basins are best used in conjunction with erosion controls.
- Basins with an impounding levee greater than 4.5 ft tall, measured from the lowest point to the impounding area to the highest point of the levee, and basins capable of impounding more than 35,000 ft^3, should be designed by a Registered Civil Engineer. The design should include maintenance requirements, including sediment and vegetation removal, to ensure continuous function of the basin outlet and bypass structures.
- A forebay, constructed upstream of the basin may be provided to remove debris and larger particles.
- The outflow from the sediment basin should be provided with velocity dissipation devices (see BMP EC-10) to prevent erosion and scouring of the embankment and channel.
- The principal outlet should consist of a corrugated metal, high density polyethylene (HDPE), or reinforced concrete riser pipe with dewatering holes and an anti-vortex device and trash rack attached to the top of the riser, to prevent floating debris from flowing out of the basin or obstructing the system. This principal structure should be designed to accommodate the inflow design storm.
- A rock pile or rock-filled gabions can serve as alternatives to the debris screen, although the designer should be aware of the potential for extra maintenance involved should the pore spaces in the rock pile clog.
- The outlet structure should be placed on a firm, smooth foundation with the base securely anchored with concrete or other means to prevent floatation.
- Attach riser pipe (watertight connection) to a horizontal pipe (barrel). Provide anti-seep collars on the barrel.
- Cleanout level should be clearly marked on the riser pipe.

Installation

- Securely anchor and install an anti-seep collar on the outlet pipe/riser and provide an emergency spillway for passing major floods (see local flood control agency).
- Areas under embankments must be cleared and stripped of vegetation.
- Chain link fencing should be provided around each sediment basin to prevent unauthorized entry to the basin or if safety is a concern.

Costs

The cost of a sediment basin is highly variable and is dependent of the site configuration. To decrease basin construction costs, designers should consider using existing site features such as berms or depressed area to site the sediment basin. Designers should also consider potential savings associated with designing the basin to minimize the number of maintenance cycles and siting the basin in a location where a permanent BMP (e.g., extended detention basin) is required for the project site.

Inspection and Maintenance

- BMPs must be inspected in accordance with General Permit requirements for the associated project type and risk level and as required by local requirements. It is recommended that at a minimum, basins be inspected weekly, prior to forecasted rain events, daily during extended rain events, and after the conclusion of rain events.
- Examine basin banks for seepage and structural soundness.
- Check inlet and outlet structures and spillway for any damage or obstructions. Repair damage and remove obstructions as needed.
- Check inlet and outlet area for erosion and stabilize if required.
- Check fencing for damage and repair as needed.
- Sediment that accumulates in the basin must be periodically removed in order to maintain BMP effectiveness. Sediment should be removed when sediment accumulation reaches one-half the designated sediment storage volume. Sediment removed during maintenance should be managed properly. The sediment should be appropriately evaluated and used or disposed of accordingly. Options include: incorporating sediment into earthwork on the site (only if there is no risk that sediment is contaminated); or off-site export/disposal at an appropriate location (e.g., sediment characterization and disposal to an appropriate landfill).
- Remove standing water from basin within 96 hours after accumulation.
- If the basin does not drain adequately (e.g., due to storms that are more frequent or larger than the design storm or other unforeseen site conditions), dewatering should be conducted in accordance with appropriate dewatering BMPs (see NS-2) and in accordance with local permits as applicable.
- To minimize vector production:
  - Remove accumulation of live and dead floating vegetation in basins during every inspection.
  - Remove excessive emergent and perimeter vegetation as needed or as advised by local or state vector control agencies.

References

A Current Assessment of Urban Best Management Practices: Techniques for Reducing Nonpoint Source Pollution in the Coastal Zones, Metropolitan Washington Council of Governments, March 1992.

Draft-Sedimentation and Erosion Control, an Inventory of Current Practices, USEPA. April 1990.

U.S. Environmental Protection Agency (USEPA). Erosion and Sediment Control, Surface Mining in the Eastern U.S., U.S. Environmental Protection Agency, Office of Water, Washington, DC,Washington, D.C., 1976.

Fifield, J.S. Designing for Effective Sediment and Erosion Control on Construction Sites. Forester Press, Santa Barbara, CA. 2004.

Goldman S.J., Jackson K. and Bursztynsky T.A. Erosion and Sediment Control Handbook. McGraw-Hill Book Company, 1986.

U.S. Environmental Protection Agency (USEPA). Guidance Specifying Management Measures for Nonpoint Pollution in Coastal Waters. EPA 840-B-9-002. U.S. Environmental Protection Agency, Office of Water, Washington, DC, 1993.

Guidelines for the Design and Construction of Small Embankment Dams, Division of Safety of Dams, California Department of Water Resources, March 1986.

Haan C.T., Barfield B.J. and Hayes J.C. Design Hydrology and Sedimentology for Small Catchments. Academic Press. 1994.

Inlet/Outlet Alternatives for Extended Detention Basins. State of California Department of Transportation (Caltrans), 2001.

Manual of Standards of Erosion and Sediment Control Measures, Association of Bay Area Governments, May 1995.

McLean, J., 2000. Mosquitoes in Constructed Wetlands: A Management Bugaboo? In T.R. Schueler and H.K. Holland [eds.], The Practice of Watershed Protection. pp. 29-33. Center for Watershed Protection, Ellicott City, MD, 2000.

Metzger, M.E., D. F. Messer, C. L. Beitia, C. M. Myers, and V. L. Kramer. The Dark Side of Stormwater Runoff Management: Disease Vectors Associated with Structural BMPs, 2002.

National Management Measures to Control Nonpoint Source Pollution from Urban Areas, United States Environmental Protection Agency, 2002.

Proposed Guidance Specifying Management Measures for Sources of Nonpoint Pollution in Coastal Water, Work Group-Working Paper, USEPA, April 1992.

Stormwater Management of the Puget Sound Basin, Technical Manual, Publication #91-75, Washington State Department of Ecology, February 1992.

Stormwater Quality Handbooks - Construction Site Best Management Practices (BMPs) Manual, State of California Department of Transportation (Caltrans), November 2000.

Water Quality Management Plan for the Lake Tahoe Region, Volume II Handbook of Management Practices, Tahoe Regional Planning Agency, November 1988.

Young, G.K. and Graziano, F., Outlet Hydraulics of Extended Detention Facilities for Northern Virginia Planning District Commission, 1989.

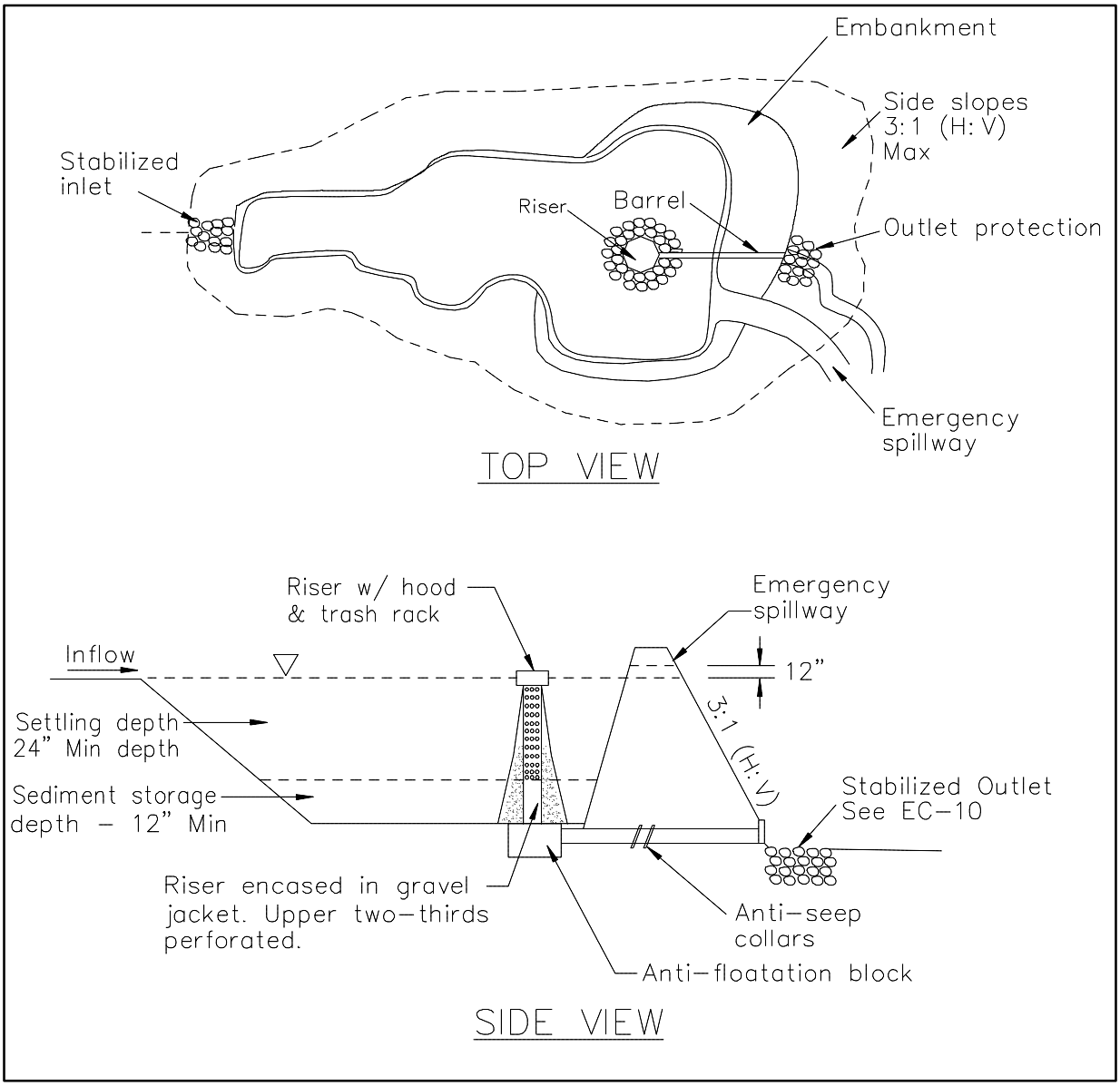

FIGURE 1: TYPICAL TEMPORARY SEDIMENT BASIN
MULTIPLE ORIFICE DESIGN
NOT TO SCALE

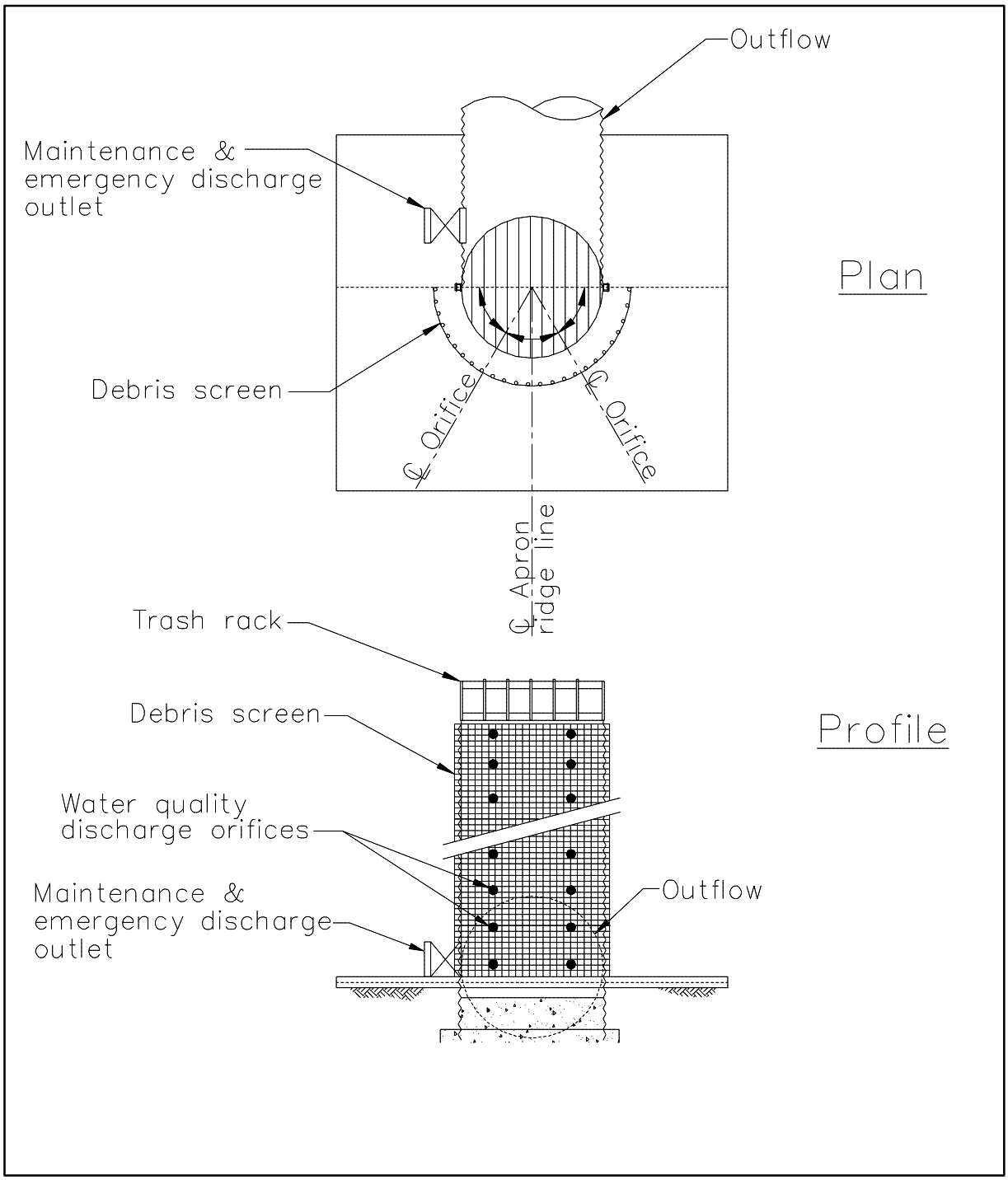

FIGURE 2: MULTIPLE ORIFICE OUTLET RISER

NOT TO SCALE

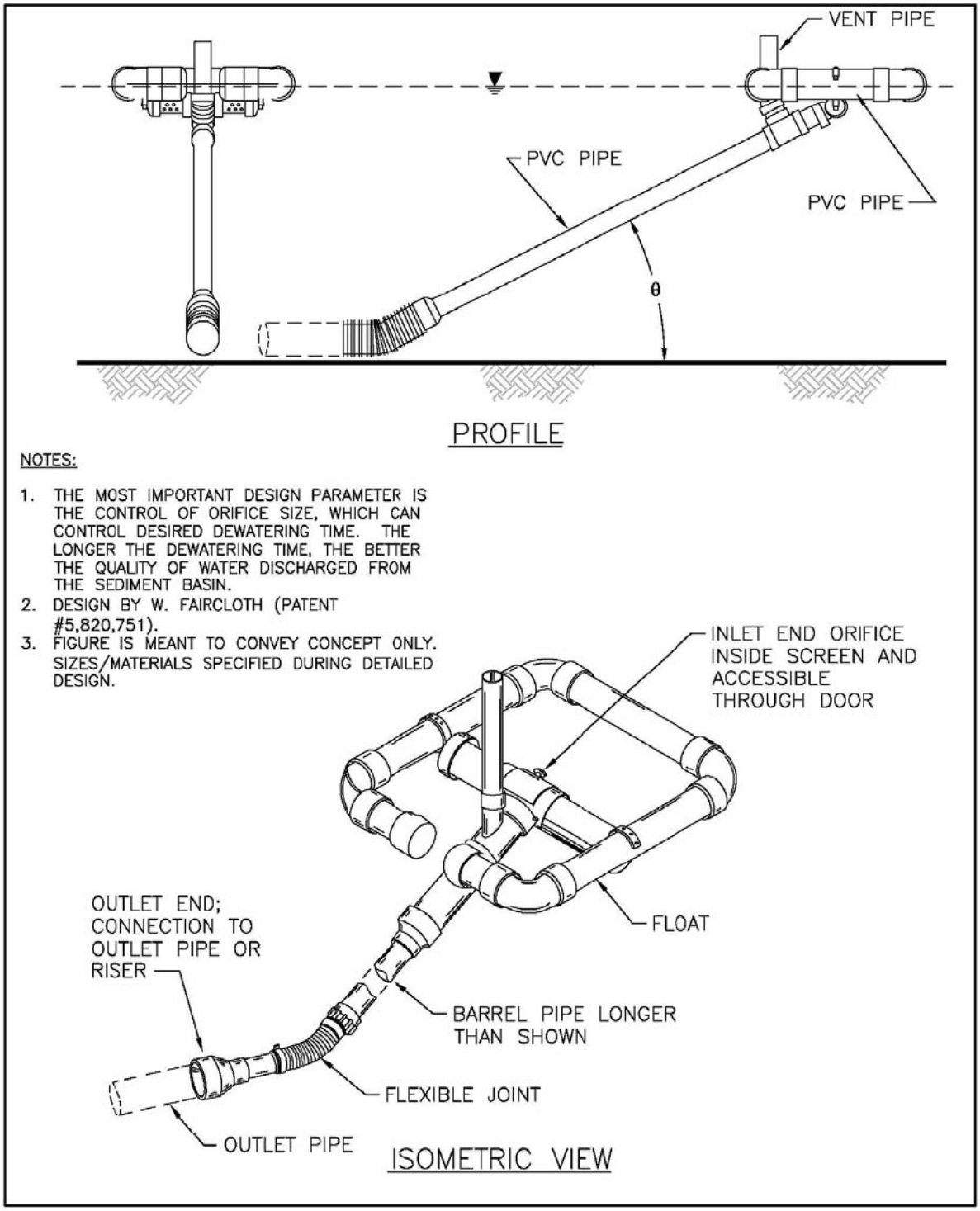

FIGURE 3: TYPICAL SKIMMER

NOT TO SCALE

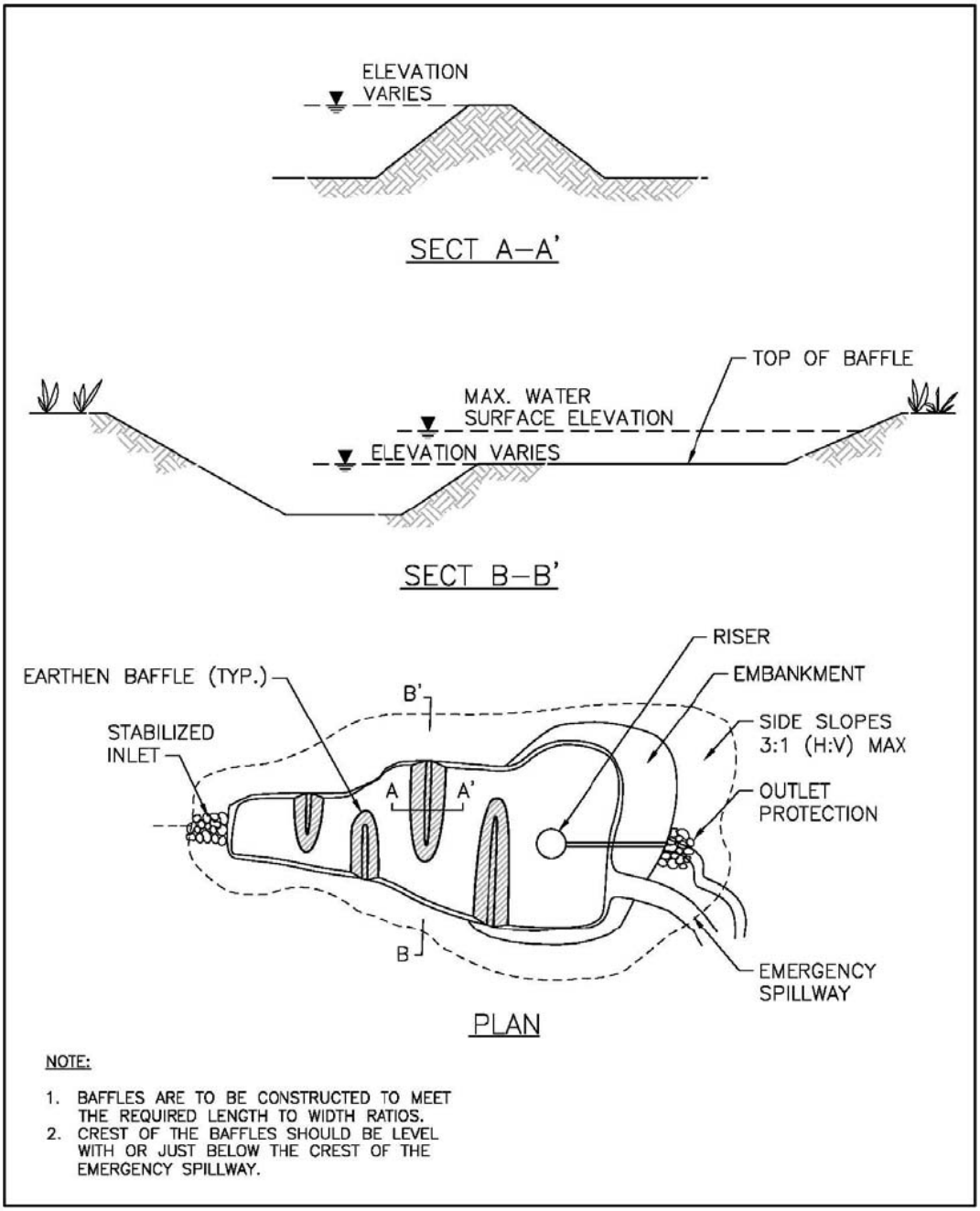

FIGURE 4: TYPICAL TEMPORARY SEDIMENT BASIN WITH BAFFLES

NOT TO SCALE

Sediment Trap SE-3

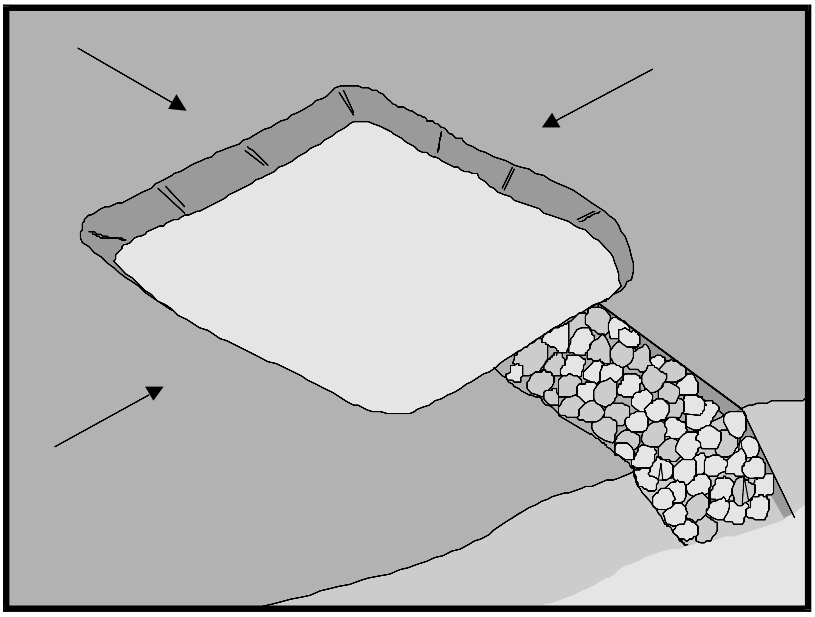

Categories

EC	Erosion Control	
SE	Sediment Control	☑
TC	Tracking Control	
WE	Wind Erosion Control	
NS	Non-Stormwater Management Control	
WM	Waste Management and Materials Pollution Control	

Legend:

☑ **Primary Objective**

☒ **Secondary Objective**

Targeted Constituents

Sediment	☑
Nutrients	
Trash	☑
Metals	
Bacteria	
Oil and Grease	
Organics	

Potential Alternatives

SE-2 Sediment Basin (for larger areas)

Description and Purpose

A sediment trap is a containment area where sediment-laden runoff is temporarily detained under quiescent conditions, allowing sediment to settle out or before the runoff is discharged. Sediment traps are formed by excavating or constructing an earthen embankment across a waterway or low drainage area.

Suitable Applications

Sediment traps should be considered for use:

- At the perimeter of the site at locations where sediment-laden runoff is discharged offsite.
- At multiple locations within the project site where sediment control is needed.
- Around or upslope from storm drain inlet protection measures.
- Sediment traps may be used on construction projects where the drainage area is less than 5 acres. Traps would be placed where sediment-laden stormwater may enter a storm drain or watercourse. SE-2, Sediment Basins, must be used for drainage areas greater than 5 acres.
- As a supplemental control, sediment traps provide additional protection for a water body or for reducing sediment before it enters a drainage system.

Limitations

- Requires large surface areas to permit infiltration and settling of sediment.
- Not appropriate for drainage areas greater than 5 acres.
- Only removes large and medium sized particles and requires upstream erosion control.
- Attractive and dangerous to children, requiring protective fencing.
- Conducive to vector production.
- Should not be located in live streams.

Implementation

Design

A sediment trap is a small temporary ponding area, usually with a gravel outlet, formed by excavation or by construction of an earthen embankment. Its purpose is to collect and store sediment from sites cleared or graded during construction. It is intended for use on small drainage areas with no unusual drainage features and projected for a quick build-out time. It should help in removing coarse sediment from runoff. The trap is a temporary measure with a design life of approximately six months to one year and is to be maintained until the site area is permanently protected against erosion by vegetation and/or structures.

Sediment traps should be used only for small drainage areas. If the contributing drainage area is greater than 5 acres, refer to SE-2, Sediment Basins, or subdivide the catchment area into smaller drainage basins.

Sediment usually must be removed from the trap after each rainfall event. The SWPPP should detail how this sediment is to be disposed of, such as in fill areas onsite, or removal to an approved offsite dump. Sediment traps used as perimeter controls should be installed before any land disturbance takes place in the drainage area.

Sediment traps are usually small enough that a failure of the structure would not result in a loss of life, damage to home or buildings, or interruption in the use of public roads or utilities. However, sediment traps are attractive to children and can be dangerous. The following recommendations should be implemented to reduce risks:

- Install continuous fencing around the sediment trap or pond. Consult local ordinances regarding requirements for maintaining health and safety.
- Restrict basin side slopes to 3:1 or flatter.

Sediment trap size depends on the type of soil, size of the drainage area, and desired sediment removal efficiency (see SE-2, Sediment Basin). As a rule of thumb, the larger the basin volume the greater the sediment removal efficiency. Sizing criteria are typically established under the local grading ordinance or equivalent. The runoff volume from a 2-year storm is a common design criteria for a sediment trap. The sizing criteria below assume that this runoff volume is 0.042 acre-ft/acre (0.5 in. of runoff). While the climatic, topographic, and soil type extremes make it difficult to establish a statewide standard, the following criteria should trap moderate to high amounts of sediment in most areas of California:

- Locate sediment traps as near as practical to areas producing the sediment.
- Trap should be situated according to the following criteria: (1) by excavating a suitable area or where a low embankment can be constructed across a swale, (2) where failure would not cause loss of life or property damage, and (3) to provide access for maintenance, including sediment removal and sediment stockpiling in a protected area.
- Trap should be sized to accommodate a settling zone and sediment storage zone with recommended minimum volumes of 67 yd^3/acre and 33 yd^3/acre of contributing drainage area, respectively, based on 0.5 in. of runoff volume over a 24-hour period. In many cases, the size of an individual trap is limited by available space. Multiple traps or additional volume may be required to accommodate specific rainfall, soil, and site conditions.
- Traps with an impounding levee greater than 4.5 ft tall, measured from the lowest point to the impounding area to the highest point of the levee, and traps capable of impounding more than 35,000 ft^3, should be designed by a Registered Civil Engineer. The design should include maintenance requirements, including sediment and vegetation removal, to ensure continuous function of the trap outlet and bypass structures.
- The outlet pipe or open spillway must be designed to convey anticipated peak flows.
- Use rock or vegetation to protect the trap outlets against erosion.
- Fencing should be provided to prevent unauthorized entry.

Installation

Sediment traps can be constructed by excavating a depression in the ground or creating an impoundment with a small embankment. Sediment traps should be installed outside the area being graded and should be built prior to the start of the grading activities or removal of vegetation. To minimize the area disturbed by them, sediment traps should be installed in natural depressions or in small swales or drainage ways. The following steps must be followed during installation:

- The area under the embankment must be cleared, grubbed, and stripped of any vegetation and root mat. The pool area should be cleared.
- The fill material for the embankment must be free of roots or other woody vegetation as well as oversized stones, rocks, organic material, or other objectionable material. The embankment may be compacted by traversing with equipment while it is being constructed.
- All cut-and-fill slopes should be 3:1 or flatter.
- When a riser is used, all pipe joints must be watertight.
- When a riser is used, at least the top two-thirds of the riser should be perforated with 0.5 in. diameter holes spaced 8 in. vertically and 10 to 12 in. horizontally. See SE-2, Sediment Basin.
- When an earth or stone outlet is used, the outlet crest elevation should be at least 1 ft below the top of the embankment.

- When crushed stone outlet is used, the crushed stone used in the outlet should meet AASHTO M43, size No. 2 or 24, or its equivalent such as MSHA No. 2. Gravel meeting the above gradation may be used if crushed stone is not available.

Costs

Average annual cost per installation and maintenance (18 month useful life) is $0.73 per ft^3 ($1,300 per drainage acre). Maintenance costs are approximately 20% of installation costs.

Inspection and Maintenance

- Inspect BMPs prior to forecast rain, daily during extended rain events, after rain events, weekly during the rainy season, and at two-week intervals during the non-rainy season.
- Inspect outlet area for erosion and stabilize if required.
- Inspect trap banks for seepage and structural soundness, repair as needed.
- Inspect outlet structure and spillway for any damage or obstructions. Repair damage and remove obstructions as needed.
- Inspect fencing for damage and repair as needed.
- Inspect the sediment trap for area of standing water during every visit. Corrective measures should be taken if the BMP does not dewater completely in 72 hours or less to prevent vector production.
- Sediment that accumulates in the BMP must be periodically removed in order to maintain BMP effectiveness. Sediment should be removed when the sediment accumulation reaches one-third of the trap capacity. Sediment removed during maintenance may be incorporated into earthwork on the site or disposed of at an appropriate location.
- Remove vegetation from the sediment trap when first detected to prevent pools of standing water and subsequent vector production.
- BMPs that require dewatering shall be continuously attended while dewatering takes place. Dewatering BMPs shall be implemented at all times during dewatering activities.

References

Brown, W., and T. Schueler. The Economics of Stormwater BMPs in the Mid-Atlantic Region. Prepared for Chesapeake Research Consortium, Edgewater, MD, by the Center for Watershed Protection, Ellicott City, MD, 1997.

Draft – Sedimentation and Erosion Control, an Inventory of Current Practices, USEPA, April 1990.

Manual of Standards of Erosion and Sediment Control Measures, Association of Bay Area Governments, May 1995.

Metzger, M.E., D.F. Messer, C.L. Beitia, C.M. Myers, and V.L. Kramer, The Dark Side of Stormwater Runoff Management: Disease Vectors Associated with Structural BMPs, 2002.

National Management Measures to Control Nonpoint Source Pollution from Urban Areas, United States Environmental Protection Agency, 2002.

Proposed Guidance Specifying Management Measures for Sources of Nonpoint Pollution in Coastal Waters, Work Group-Working Paper, USEPA, April 1992.

Stormwater Quality Handbooks - Construction Site Best Management Practices (BMPs) Manual, State of California Department of Transportation (Caltrans), November 2000.

Stormwater Management Manual for The Puget Sound Basin, Washington State Department of Ecology, Public Review Draft, 1991.

U.S. Environmental Protection Agency (USEPA). Guidance Specifying Management Measures for Nonpoint Pollution in Coastal Waters. EPA 840-B-9-002. U.S. Environmental Protection Agency, Office of Water, Washington, DC, 1993.

Water Quality Management Plan for the Lake Tahoe Region, Volume II, Handbook of Management Practices, Tahoe Regional Planning Agency, November 1988.

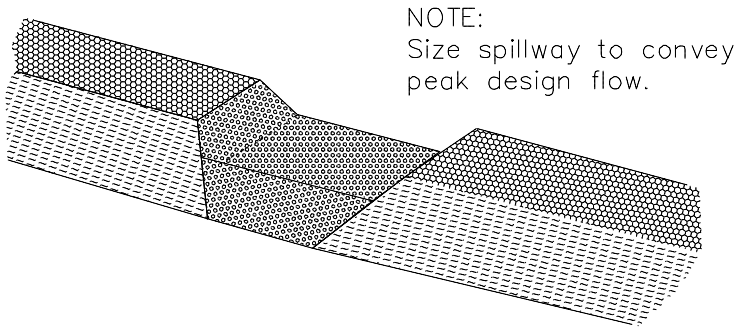

TYPICAL OPEN SPILLWAY

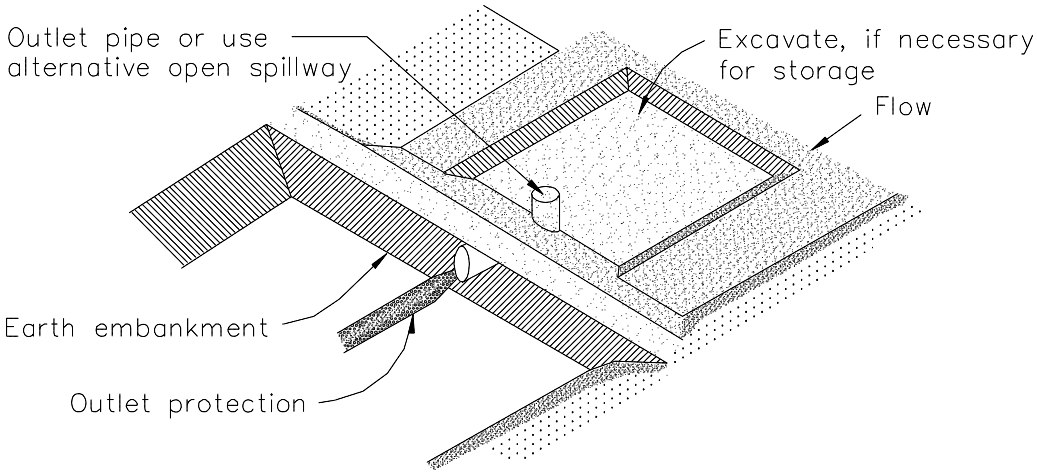

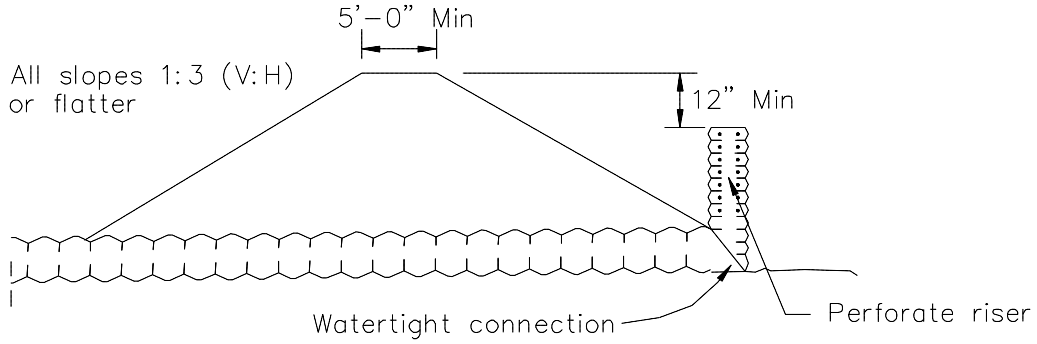

EMBANKMENT SECTION THRU RISER

TYPICAL SEDIMENT TRAP
NOT TO SCALE

Check Dams SE-4

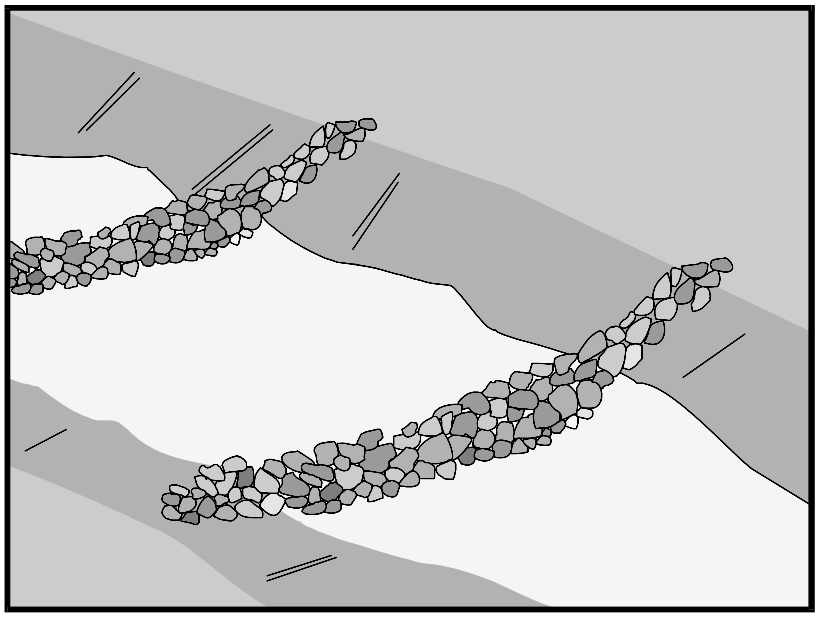

Categories

EC	Erosion Control	☒
SE	Sediment Control	☑
TC	Tracking Control	
WE	Wind Erosion Control	
NS	Non-Stormwater Management Control	
WM	Waste Management and Materials Pollution Control	

Legend:

☑ **Primary Category**

☒ **Secondary Category**

Targeted Constituents

Sediment	☑
Nutrients	
Trash	
Metals	
Bacteria	
Oil and Grease	
Organics	

Potential Alternatives

SE-5 Fiber Rolls

SE-6 Gravel Bag Berm

SE-8 Sandbag Barrier

SE-14 Biofilter Bags

Description and Purpose

A check dam is a small barrier constructed of rock, gravel bags, sandbags, fiber rolls, or other proprietary products, placed across a constructed swale or drainage ditch. Check dams reduce the effective slope of the channel, thereby reducing scour and channel erosion by reducing flow velocity and increasing residence time within the channel, allowing sediment to settle.

Suitable Applications

Check dams may be appropriate in the following situations:

- To promote sedimentation behind the dam.
- To prevent erosion by reducing the velocity of channel flow in small intermittent channels and temporary swales.
- In small open channels that drain 10 acres or less.
- In steep channels where stormwater runoff velocities exceed 5 ft/s.
- During the establishment of grass linings in drainage ditches or channels.
- In temporary ditches where the short length of service does not warrant establishment of erosion-resistant linings.
- To act as a grade control structure.

Limitations

- Not to be used in live streams or in channels with extended base flows.
- Not appropriate in channels that drain areas greater than 10 acres.
- Not appropriate in channels that are already grass-lined unless erosion potential or sediment-laden flow is expected, as installation may damage vegetation.
- Require extensive maintenance following high velocity flows.
- Promotes sediment trapping which can be re-suspended during subsequent storms or removal of the check dam.
- Do not construct check dams with straw bales or silt fence.
- Water suitable for mosquito production may stand behind check dams, particularly if subjected to daily non-stormwater discharges.

Implementation

General

Check dams reduce the effective slope and create small pools in swales and ditches that drain 10 acres or less. Using check dams to reduce channel slope reduces the velocity of stormwater flows, thus reducing erosion of the swale or ditch and promoting sedimentation. Thus, check dams are dual-purpose and serve an important role as erosion controls as well as as sediment controls. Note that use of 1-2 isolated check dams for sedimentation will likely result in little net removal of sediment because of the small detention time and probable scour during longer storms. Using a series of check dams will generally increase their effectiveness. A sediment trap (SE-3) may be placed immediately upstream of the check dam to increase sediment removal efficiency.

Design and Layout

Check dams work by decreasing the effective slope in ditches and swales. An important consequence of the reduced slope is a reduction in capacity of the ditch or swale. This reduction in capacity should be considered when using this BMP, as reduced capacity can result in overtopping of the ditch or swale and resultant consequences. In some cases, such as a "permanent" ditch or swale being constructed early and used as a "temporary" conveyance for construction flows, the ditch or swale may have sufficient capacity such that the temporary reduction in capacity due to check dams is acceptable. When check dams reduce capacities beyond acceptable limits, either:

- Don't use check dams. Consider alternative BMPs, or.
- Increase the size of the ditch or swale to restore capacity.

Maximum slope and velocity reduction is achieved when the toe of the upstream dam is at the same elevation as the top of the downstream dam (see "Spacing Between Check Dams" detail at the end of this fact sheet). The center section of the dam should be lower than the edge sections (at least 6 inches), acting as a spillway, so that the check dam will direct flows to the center of

the ditch or swale (see "Typical Rock Check Dam" detail at the end of this fact sheet). Bypass or side-cutting can occur if a sufficient spillway is not provided in the center of the dam.

Check dams are usually constructed of rock, gravel bags, sandbags, and fiber rolls. A number of products can also be used as check dams (e.g. HDPE check dams, temporary silt dikes (SE-12)), and some of these products can be removed and reused. Check dams can also be constructed of logs or lumber, and have the advantage of a longer lifespan when compared to gravel bags, sandbags, and fiber rolls. Check dams should not be constructed from straw bales or silt fences, since concentrated flows quickly wash out these materials.

Rock check dams are usually constructed of 8 to 12 in. rock. The rock is placed either by hand or mechanically, but never just dumped into the channel. The dam should completely span the ditch or swale to prevent washout. The rock used should be large enough to stay in place given the expected design flow through the channel. It is recommended that abutments be extended 18 in. into the channel bank. Rock can be graded such that smaller diameter rock (e.g. 2-4 in) is located on the upstream side of larger rock (holding the smaller rock in place); increasing residence time.

Log check dams are usually constructed of 4 to 6 in. diameter logs, installed vertically. The logs should be embedded into the soil at least 18 in. Logs can be bolted or wired to vertical support logs that have been driven or buried into the soil.

See fiber rolls, SE-5, for installation of fiber roll check dams.

Gravel bag and sand bag check dams are constructed by stacking bags across the ditch or swale, shaped as shown in the drawings at the end of this fact sheet (see "Gravel Bag Check Dam" detail at the end of this fact sheet).

Manufactured products, such as temporary silt dikes (SE-12), should be installed in accordance with the manufacturer's instructions. Installation typically requires anchoring or trenching of products, as well as regular maintenance to remove accumulated sediment and debris.

If grass is planted to stabilize the ditch or swale, the check dam should be removed when the grass has matured (unless the slope of the swales is greater than 4%).

The following guidance should be followed for the design and layout of check dams:

- Install the first check dam approximately 16 ft from the outfall device and at regular intervals based on slope gradient and soil type.
- Check dams should be placed at a distance and height to allow small pools to form between each check dam.
- For multiple check dam installation, backwater from a downstream check dam should reach the toes of the upstream check dam.
- A sediment trap provided immediately upstream of the check dam will help capture sediment. Due to the potential for this sediment to be resuspended in subsequent storms, the sediment trap should be cleaned following each storm event.

- High flows (typically a 2-year storm or larger) should safely flow over the check dam without an increase in upstream flooding or damage to the check dam.
- Where grass is used to line ditches, check dams should be removed when grass has matured sufficiently to protect the ditch or swale.

Materials

- Rock used for check dams should typically be 8-12 in rock and be sufficiently sized to stay in place given expected design flows in the channel. Smaller diameter rock (e.g. 2 to 4 in) can be placed on the upstream side of larger rock to increase residence time.
- Gravel bags used for check dams should conform to the requirements of SE-6, Gravel Bag Berms.
- Sandbags used for check dams should conform to SE-8, Sandbag Barrier.
- Fiber rolls used for check dams should conform to SE-5, Fiber Rolls.
- Temporary silt dikes used for check dams should conform to SE-12, Temporary Silt Dikes.

Installation

- Rock should be placed individually by hand or by mechanical methods (no dumping of rock) to achieve complete ditch or swale coverage.
- Tightly abut bags and stack according to detail shown in the figure at the end of this section (pyramid approach). Gravel bags and sandbags should not be stacked any higher than 3 ft.
- Upper rows or gravel and sand bags shall overlap joints in lower rows.
- Fiber rolls should be trenched in, backfilled, and firmly staked in place.
- Install along a level contour.
- HDPE check dams, temporary silt dikes, and other manufactured products should be used and installed per manufacturer specifications.

Costs

Cost consists of labor costs if materials are readily available (such as gravel on-site). If material must be imported, costs will increase. For other material and installation costs, see SE-5, SE-6, SE-8, SE-12, and SE-14.

Inspection and Maintenance

- BMPs must be inspected in accordance with General Permit requirements for the associated project type and risk level. It is recommended that at a minimum, BMPs be inspected weekly, prior to forecasted rain events, daily during extended rain events, and after the conclusion of rain events.
- Replace missing rock, bags, rolls, etc. Replace bags or rolls that have degraded or have become damaged.

- If the check dam is used as a sediment capture device, sediment that accumulates behind the BMP should be periodically removed in order to maintain BMP effectiveness. Sediment should be removed when the sediment accumulation reaches one-third of the barrier height.
- If the check dam is used as a grade control structure, sediment removal is not required as long as the system continues to control the grade.
- Inspect areas behind check dams for pools of standing water, especially if subjected to daily non-stormwater discharges.
- Remove accumulated sediment prior to permanent seeding or soil stabilization.
- Remove check dam and accumulated sediment when check dams are no longer needed.

References

Draft – Sedimentation and Erosion Control, and Inventory of Current Practices, USEPA, April 1990.

Manual of Standards of Erosion and Sediment Control Measures, Association of Bay Area Governments, May 1995.

Stormwater Quality Handbooks - Construction Site Best Management Practices (BMPs) Manual, State of California Department of Transportation (Caltrans), March 2003.

Stormwater Management of the Puget Sound Basin, Technical Manual, Publication #91-75, Washington State Department of Ecology, February 1992.

Erosion and Sediment Control Manual, Oregon Department of Environmental Quality, February 2005.

Metzger, M.E. 2004. Managing mosquitoes in stormwater treatment devices. University of California Division of Agriculture and Natural Resources, Publication 8125. On-line: http://anrcatalog.ucdavis.edu/pdf/8125.pdf

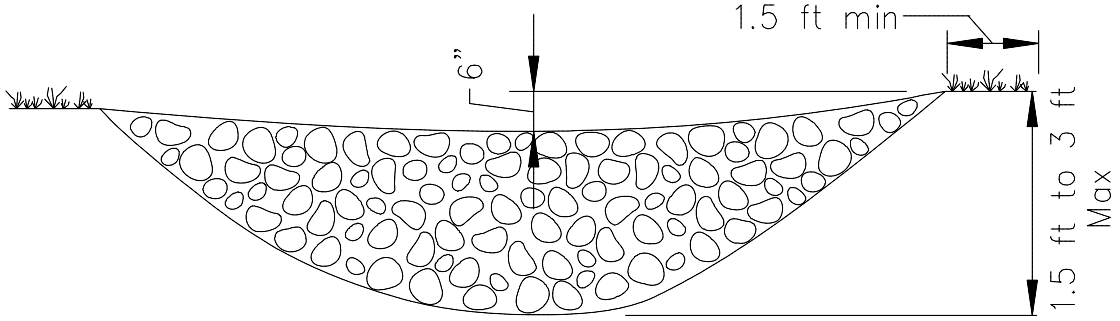

ELEVATION

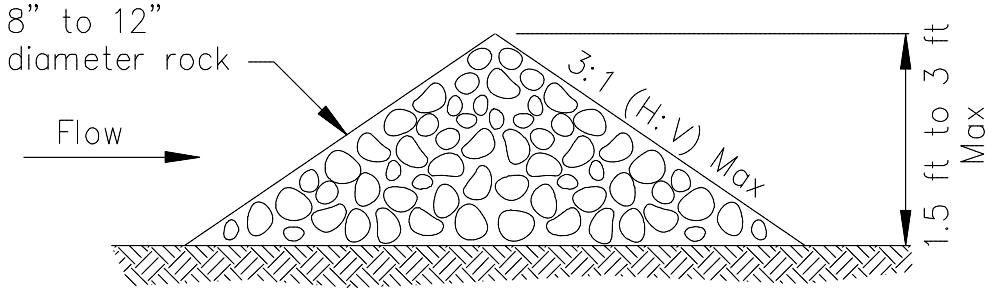

TYPICAL ROCK CHECK DAM SECTION

ROCK CHECK DAM
NOT TO SCALE

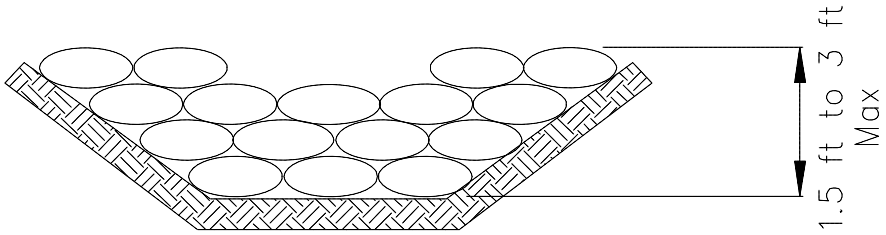

GRAVEL BAG CHECK DAM ELEVATION
NOT TO SCALE

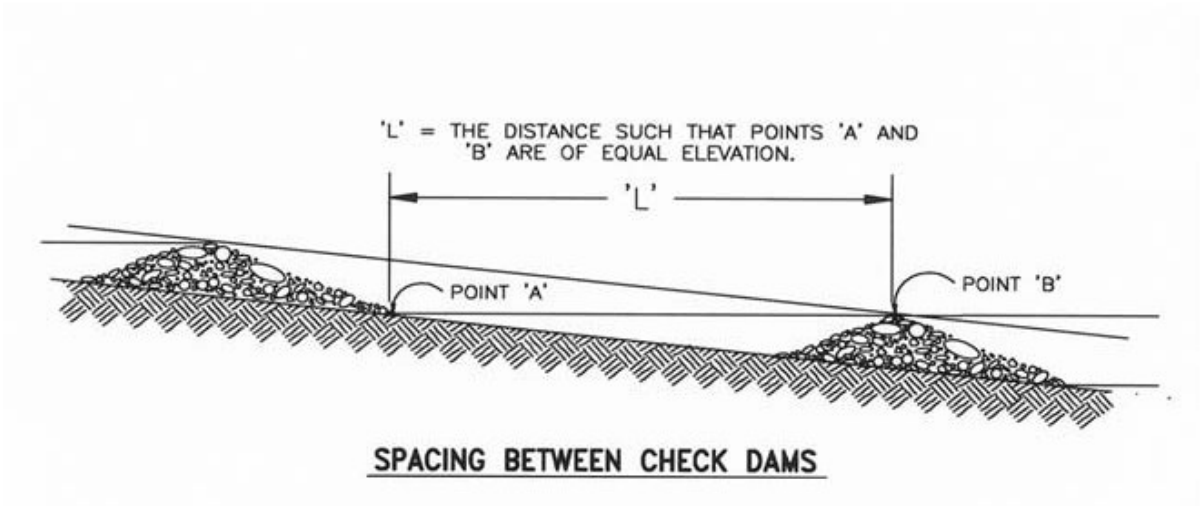
'L' = THE DISTANCE SUCH THAT POINTS 'A' AND 'B' ARE OF EQUAL ELEVATION.
'L'
POINT 'A'
POINT 'B'
SPACING BETWEEN CHECK DAMS

Fiber Rolls SE-5

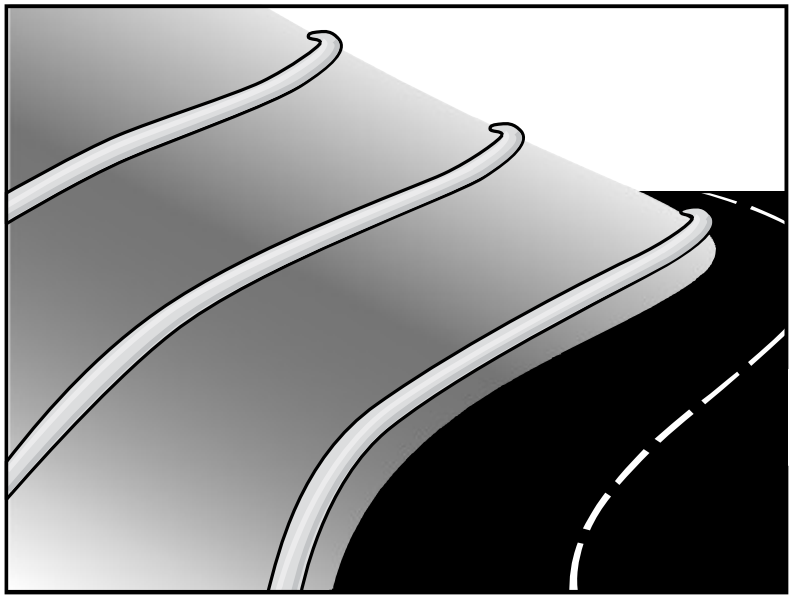

Categories

EC	Erosion Control	☒
SE	Sediment Control	☑
TC	Tracking Control	
WE	Wind Erosion Control	
NS	Non-Stormwater Management Control	
WM	Waste Management and Materials Pollution Control	

Legend:

☑ **Primary Category**

☒ **Secondary Category**

Targeted Constituents

Sediment	☑
Nutrients	
Trash	
Metals	
Bacteria	
Oil and Grease	
Organics	

Potential Alternatives

SE-1 Silt Fence

SE-6 Gravel Bag Berm

SE-8 Sandbag Barrier

SE-14 Biofilter Bags

Description and Purpose

A fiber roll consists of straw, coir, or other biodegradable materials bound into a tight tubular roll wrapped by netting, which can be photodegradable or natural. Additionally, gravel core fiber rolls are available, which contain an imbedded ballast material such as gravel or sand for additional weight when staking the rolls are not feasible (such as use as inlet protection). When fiber rolls are placed at the toe and on the face of slopes along the contours, they intercept runoff, reduce its flow velocity, release the runoff as sheet flow, and provide removal of sediment from the runoff (through sedimentation). By interrupting the length of a slope, fiber rolls can also reduce sheet and rill erosion until vegetation is established.

Suitable Applications

Fiber rolls may be suitable:

- Along the toe, top, face, and at grade breaks of exposed and erodible slopes to shorten slope length and spread runoff as sheet flow.
- At the end of a downward slope where it transitions to a steeper slope.
- Along the perimeter of a project.
- As check dams in unlined ditches with minimal grade.
- Down-slope of exposed soil areas.
- At operational storm drains as a form of inlet protection.

- Around temporary stockpiles.

Limitations

- Fiber rolls are not effective unless trenched in and staked.
- Not intended for use in high flow situations.
- Difficult to move once saturated.
- If not properly staked and trenched in, fiber rolls could be transported by high flows.
- Fiber rolls have a very limited sediment capture zone.
- Fiber rolls should not be used on slopes subject to creep, slumping, or landslide.
- Rolls typically function for 12-24 months depending upon local conditions.

Implementation

Fiber Roll Materials

- Fiber rolls should be prefabricated.
- Fiber rolls may come manufactured containing polyacrylamide (PAM), a flocculating agent within the roll. Fiber rolls impregnated with PAM provide additional sediment removal capabilities and should be used in areas with fine, clayey or silty soils to provide additional sediment removal capabilities. Monitoring may be required for these installations.
- Fiber rolls are made from weed free rice straw, flax, or a similar agricultural material bound into a tight tubular roll by netting.
- Typical fiber rolls vary in diameter from 9 in. to 20 in. Larger diameter rolls are available as well.

Installation

- Locate fiber rolls on level contours spaced as follows:
  - Slope inclination of 4:1 (H:V) or flatter: Fiber rolls should be placed at a maximum interval of 20 ft.
  - Slope inclination between 4:1 and 2:1 (H:V): Fiber Rolls should be placed at a maximum interval of 15 ft. (a closer spacing is more effective).
  - Slope inclination 2:1 (H:V) or greater: Fiber Rolls should be placed at a maximum interval of 10 ft. (a closer spacing is more effective).
- Prepare the slope before beginning installation.
- Dig small trenches across the slope on the contour. The trench depth should be ¼ to 1/3 of the thickness of the roll, and the width should equal the roll diameter, in order to provide area to backfill the trench.

- It is critical that rolls are installed perpendicular to water movement, and parallel to the slope contour.
- Start building trenches and installing rolls from the bottom of the slope and work up.
- It is recommended that pilot holes be driven through the fiber roll. Use a straight bar to drive holes through the roll and into the soil for the wooden stakes.
- Turn the ends of the fiber roll up slope to prevent runoff from going around the roll.
- Stake fiber rolls into the trench.
  - Drive stakes at the end of each fiber roll and spaced 4 ft maximum on center.
  - Use wood stakes with a nominal classification of 0.75 by 0.75 in. and minimum length of 24 in.
- If more than one fiber roll is placed in a row, the rolls should be overlapped, not abutted.
- See typical fiber roll installation details at the end of this fact sheet.

Removal

- Fiber rolls can be left in place or removed depending on the type of fiber roll and application (temporary vs. permanent installation). Typically, fiber rolls encased with plastic netting are used for a temporary application because the netting does not biodegrade. Fiber rolls used in a permanent application are typically encased with a biodegradeable material and are left in place. Removal of a fiber roll used in a permanent application can result in greater disturbance.
- Temporary installations should only be removed when up gradient areas are stabilized per General Permit requirements, and/or pollutant sources no longer present a hazard. But, they should also be removed before vegetation becomes too mature so that the removal process does not disturb more soil and vegetation than is necessary.

Costs

Material costs for regular fiber rolls range from $20 - $30 per 25 ft roll.

Material costs for PAM impregnated fiber rolls range between 7.00-$9.00 per linear foot, based upon vendor research.

Inspection and Maintenance

- BMPs must be inspected in accordance with General Permit requirements for the associated project type and risk level. It is recommended that at a minimum, BMPs be inspected weekly, prior to forecasted rain events, daily during extended rain events, and after the conclusion of rain events.
- Repair or replace split, torn, unraveling, or slumping fiber rolls.
- If the fiber roll is used as a sediment capture device, or as an erosion control device to maintain sheet flows, sediment that accumulates in the BMP should be periodically removed

in order to maintain BMP effectiveness. Sediment should be removed when sediment accumulation reaches one-third the designated sediment storage depth.

- If fiber rolls are used for erosion control, such as in a check dam, sediment removal should not be required as long as the system continues to control the grade. Sediment control BMPs will likely be required in conjunction with this type of application.
- Repair any rills or gullies promptly.

References

Stormwater Quality Handbooks - Construction Site Best Management Practices (BMPs) Manual, State of California Department of Transportation (Caltrans), March 2003.

Erosion and Sediment Control Manual, Oregon Department of Environmental Quality, February 2005.

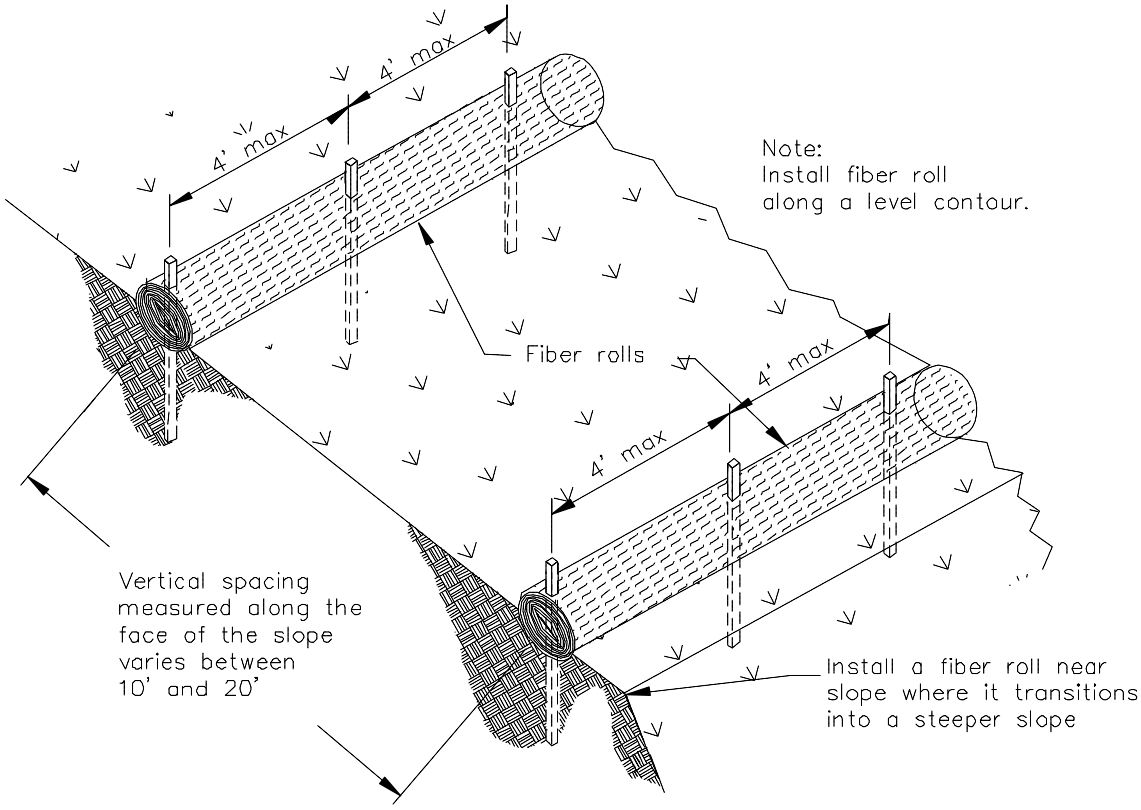

TYPICAL FIBER ROLL INSTALLATION

N.T.S.

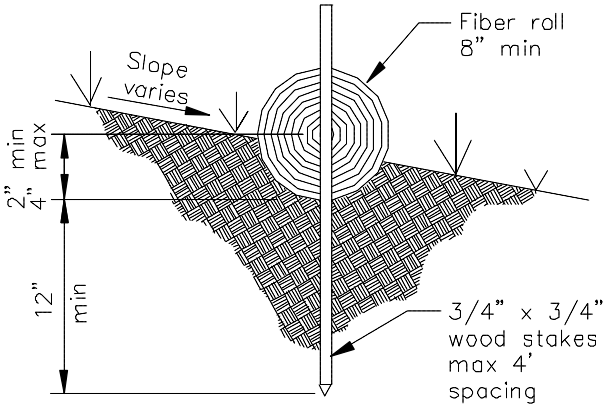

ENTRENCHMENT DETAIL

N.T.S.

Gravel Bag Berm SE-6

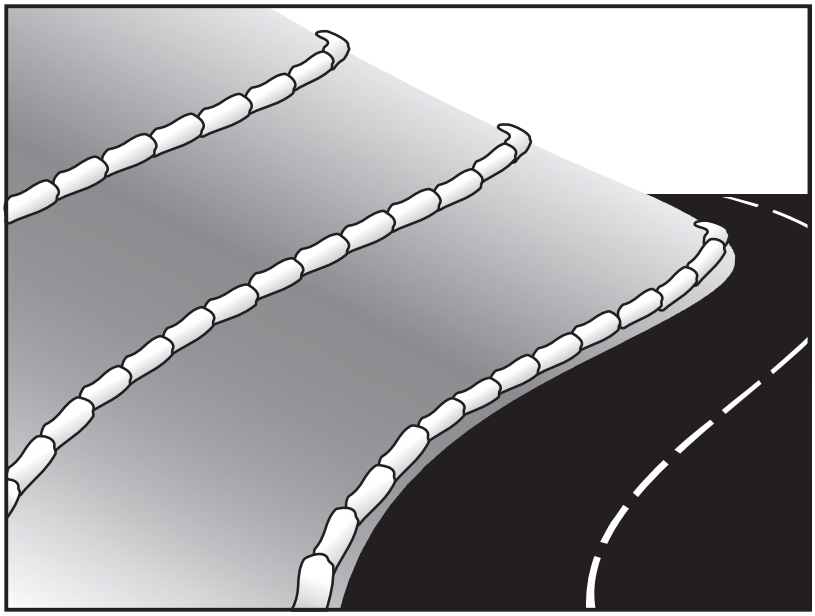

Categories

EC	Erosion Control	☒
SE	Sediment Control	☑
TC	Tracking Control	
WE	Wind Erosion Control	
NS	Non-Stormwater Management Control	
WM	Waste Management and Materials Pollution Control	

Legend:

☑ **Primary Category**

☒ **Secondary Category**

Targeted Constituents

Sediment	☑
Nutrients	
Trash	
Metals	
Bacteria	
Oil and Grease	
Organics	

Potential Alternatives

SE-1 Silt Fence

SE-5 Fiber Roll

SE-8 Sandbag Barrier

SE-14 Biofilter Bags

Description and Purpose

A gravel bag berm is a series of gravel-filled bags placed on a level contour to intercept sheet flows. Gravel bags pond sheet flow runoff, allowing sediment to settle out, and release runoff slowly as sheet flow, preventing erosion.

Suitable Applications

Gravel bag berms may be suitable:

- As a linear sediment control measure:
  - Below the toe of slopes and erodible slopes
  - As sediment traps at culvert/pipe outlets
  - Below other small cleared areas
  - Along the perimeter of a site
  - Down slope of exposed soil areas
  - Around temporary stockpiles and spoil areas
  - Parallel to a roadway to keep sediment off paved areas
  - Along streams and channels
- As a linear erosion control measure:
  - Along the face and at grade breaks of exposed and erodible slopes to shorten slope length and spread runoff as sheet flow.

- At the top of slopes to divert runoff away from disturbed slopes.
- As chevrons (small check dams) across mildly sloped construction roads. For use check dam use in channels, see SE-4, Check Dams.

Limitations

- Gravel berms may be difficult to remove.
- Removal problems limit their usefulness in landscaped areas.
- Gravel bag berm may not be appropriate for drainage areas greater than 5 acres.
- Runoff will pond upstream of the berm, possibly causing flooding if sufficient space does not exist.
- Degraded gravel bags may rupture when removed, spilling contents.
- Installation can be labor intensive.
- Durability of gravel bags is somewhat limited and bags may need to be replaced when installation is required for longer than 6 months.
- Easily damaged by construction equipment.
- When used to detain concentrated flows, maintenance requirements increase.

Implementation

General

A gravel bag berm consists of a row of open graded gravel-filled bags placed on a level contour. When appropriately placed, a gravel bag berm intercepts and slows sheet flow runoff, causing temporary ponding. The temporary ponding allows sediment to settle. The open graded gravel in the bags is porous, which allows the ponded runoff to flow slowly through the bags, releasing the runoff as sheet flows. Gravel bag berms also interrupt the slope length and thereby reduce erosion by reducing the tendency of sheet flows to concentrate into rivulets, which erode rills, and ultimately gullies, into disturbed, sloped soils. Gravel bag berms are similar to sand bag barriers, but are more porous. Generally, gravel bag berms should be used in conjunction with temporary soil stabilization controls up slope to provide effective erosion and sediment control.

Design and Layout

- Locate gravel bag berms on level contours.
- When used for slope interruption, the following slope/sheet flow length combinations apply:
  - Slope inclination of 4:1 (H:V) or flatter: Gravel bags should be placed at a maximum interval of 20 ft, with the first row near the slope toe.
  - Slope inclination between 4:1 and 2:1 (H:V): Gravel bags should be placed at a maximum interval of 15 ft. (a closer spacing is more effective), with the first row near the slope toe.

Slope inclination 2:1 (H:V) or greater: Gravel bags should be placed at a maximum interval of 10 ft. (a closer spacing is more effective), with the first row near the slope toe.

- Turn the ends of the gravel bag barriers up slope to prevent runoff from going around the berm.
- Allow sufficient space up slope from the gravel bag berm to allow ponding, and to provide room for sediment storage.
- For installation near the toe of the slope, gravel bag barriers should be set back from the slope toe to facilitate cleaning. Where specific site conditions do not allow for a set-back, the gravel bag barrier may be constructed on the toe of the slope. To prevent flows behind the barrier, bags can be placed perpendicular to a berm to serve as cross barriers.
- Drainage area should not exceed 5 acres.
- In Non-Traffic Areas:
  - Height = 18 in. maximum
  - Top width = 24 in. minimum for three or more layer construction
  - Top width = 12 in. minimum for one or two layer construction
  - Side slopes = 2:1 (H:V) or flatter
- In Construction Traffic Areas:
  - Height = 12 in. maximum
  - Top width = 24 in. minimum for three or more layer construction.
  - Top width = 12 in. minimum for one or two layer construction.
  - Side slopes = 2:1 (H:V) or flatter.
- Butt ends of bags tightly.
- On multiple row, or multiple layer construction, overlap butt joints of adjacent row and row beneath.
- Use a pyramid approach when stacking bags.

Materials

- ***Bag Material:*** Bags should be woven polypropylene, polyethylene or polyamide fabric or burlap, minimum unit weight of 4 ounces/yd^2, Mullen burst strength exceeding 300 lb/in^2 in conformance with the requirements in ASTM designation D3786, and ultraviolet stability exceeding 70% in conformance with the requirements in ASTM designation D4355.

- ***Bag Size:*** Each gravel-filled bag should have a length of 18 in., width of 12 in., thickness of 3 in., and mass of approximately 33 lbs. Bag dimensions are nominal, and may vary based on locally available materials.

- ***Fill Material:*** Fill material should be 0.5 to 1 in. crushed rock, clean and free from clay, organic matter, and other deleterious material, or other suitable open graded, non-cohesive, porous gravel.

Costs

Material costs for gravel bags are average and are dependent upon material availability. $2.50-3.00 per filled gravel bag is standard based upon vendor research.

Inspection and Maintenance

- BMPs must be inspected in accordance with General Permit requirements for the associated project type and risk level. It is recommended that at a minimum, BMPs be inspected weekly, prior to forecasted rain events, daily during extended rain events, and after the conclusion of rain events.

- Gravel bags exposed to sunlight will need to be replaced every two to three months due to degrading of the bags.

- Reshape or replace gravel bags as needed.

- Repair washouts or other damage as needed.

- Sediment that accumulates in the BMP should be periodically removed in order to maintain BMP effectiveness. Sediment should be removed when the sediment accumulation reaches one-third of the barrier height.

- Remove gravel bag berms when no longer needed and recycle gravel fill whenever possible and properly dispose of bag material. Remove sediment accumulation and clean, re-grade, and stabilize the area.

References

Handbook of Steel Drainage and Highway Construction, American Iron and Steel Institute, 1983.

Stormwater Quality Handbooks - Construction Site Best Management Practices (BMPs) Manual, State of California Department of Transportation (Caltrans), March 2003.

Stormwater Pollution Plan Handbook, First Edition, State of California, Department of Transportation Division of New Technology, Materials and Research, October 1992.

Erosion and Sediment Control Manual, Oregon Department of Environmental Quality, February 2005.

Street Sweeping and Vacuuming SE-7

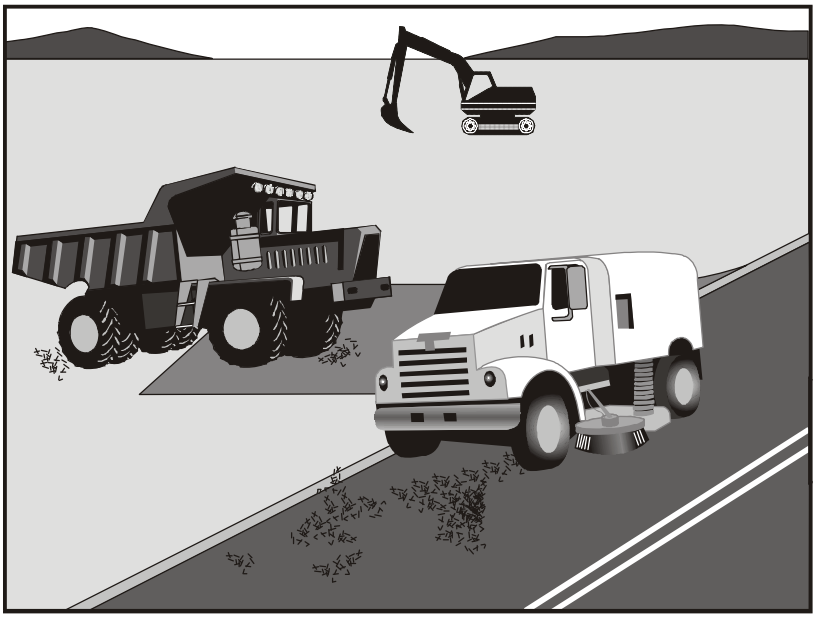

Categories

EC	Erosion Control	
SE	Sediment Control	☒
TC	Tracking Control	☑
WE	Wind Erosion Control	
NS	Non-Stormwater Management Control	
WM	Waste Management and Materials Pollution Control	

Legend:

☑ **Primary Objective**

☒ **Secondary Objective**

Targeted Constituents

Sediment	☑
Nutrients	
Trash	☑
Metals	
Bacteria	
Oil and Grease	☑
Organics	

Potential Alternatives

None

Description and Purpose

Street sweeping and vacuuming includes use of self-propelled and walk-behind equipment to remove sediment from streets and roadways, and to clean paved surfaces in preparation for final paving. Sweeping and vacuuming prevents sediment from the project site from entering storm drains or receiving waters.

Suitable Applications

Sweeping and vacuuming are suitable anywhere sediment is tracked from the project site onto public or private paved streets and roads, typically at points of egress. Sweeping and vacuuming are also applicable during preparation of paved surfaces for final paving.

Limitations

Sweeping and vacuuming may not be effective when sediment is wet or when tracked soil is caked (caked soil may need to be scraped loose).

Implementation

- Controlling the number of points where vehicles can leave the site will allow sweeping and vacuuming efforts to be focused, and perhaps save money.
- Inspect potential sediment tracking locations daily.
- Visible sediment tracking should be swept or vacuumed on a daily basis.
- Do not use kick brooms or sweeper attachments. These tend to spread the dirt rather than remove it.

- If not mixed with debris or trash, consider incorporating the removed sediment back into the project

Costs

Rental rates for self-propelled sweepers vary depending on hopper size and duration of rental. Expect rental rates from $58/hour (3 yd^3 hopper) to $88/hour (9 yd^3 hopper), plus operator costs. Hourly production rates vary with the amount of area to be swept and amount of sediment. Match the hopper size to the area and expect sediment load to minimize time spent dumping.

Inspection and Maintenance

- Inspect BMPs prior to forecast rain, daily during extended rain events, after rain events, weekly during the rainy season, and at two-week intervals during the non-rainy season.
- When actively in use, points of ingress and egress must be inspected daily.
- When tracked or spilled sediment is observed outside the construction limits, it must be removed at least daily. More frequent removal, even continuous removal, may be required in some jurisdictions.
- Be careful not to sweep up any unknown substance or any object that may be potentially hazardous.
- Adjust brooms frequently; maximize efficiency of sweeping operations.
- After sweeping is finished, properly dispose of sweeper wastes at an approved dumpsite.

References

Stormwater Quality Handbooks - Construction Site Best Management Practices (BMPs) Manual, State of California Department of Transportation (Caltrans), November 2000.

Labor Surcharge and Equipment Rental Rates, State of California Department of Transportation (Caltrans), April 1, 2002 – March 31, 2003.

Sandbag Barrier SE-8

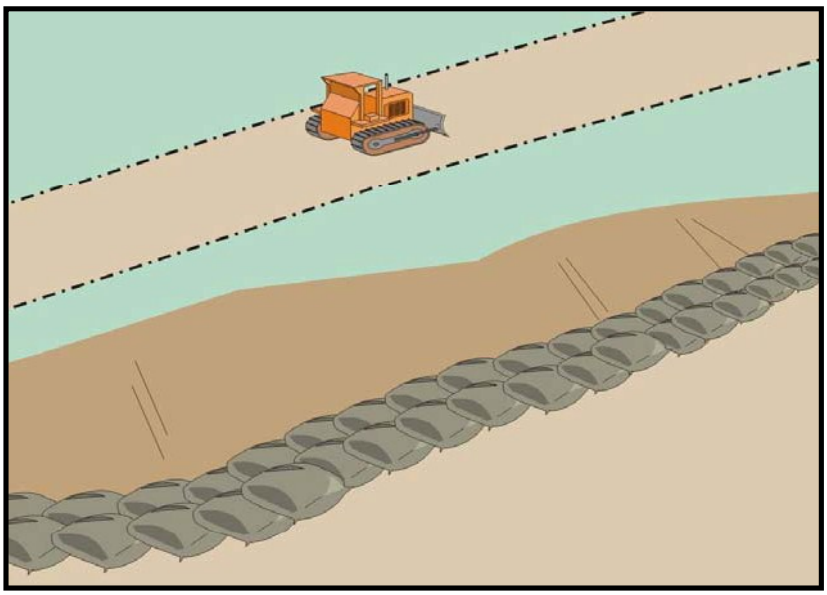

Categories

EC	Erosion Control	☒
SE	Sediment Control	☑
TC	Tracking Control	
WE	Wind Erosion Control	
NS	Non-Stormwater Management Control	
WM	Waste Management and Materials Pollution Control	

Legend:

☑ **Primary Category**

☒ **Secondary Category**

Description and Purpose

A sandbag barrier is a series of sand-filled bags placed on a level contour to intercept or to divert sheet flows. Sandbag barriers placed on a level contour pond sheet flow runoff, allowing sediment to settle out.

Suitable Applications

Sandbag barriers may be suitable:

- As a linear sediment control measure:
  - Below the toe of slopes and erodible slopes.
  - As sediment traps at culvert/pipe outlets.
  - Below other small cleared areas.
  - Along the perimeter of a site.
  - Down slope of exposed soil areas.
  - Around temporary stockpiles and spoil areas.
  - Parallel to a roadway to keep sediment off paved areas.
  - Along streams and channels.
- As linear erosion control measure:
  - Along the face and at grade breaks of exposed and erodible slopes to shorten slope length and spread runoff as sheet flow.

Targeted Constituents

Sediment	☑
Nutrients	
Trash	
Metals	
Bacteria	
Oil and Grease	
Organics	

Potential Alternatives

SE-1 Silt Fence

SE-5 Fiber Rolls

SE-6 Gravel Bag Berm

SE-14 Biofilter Bags

- At the top of slopes to divert runoff away from disturbed slopes.
- As check dams across mildly sloped construction roads.

Limitations

- It is necessary to limit the drainage area upstream of the barrier to 5 acres.
- Sandbags are not intended to be used as filtration devices.
- Easily damaged by construction equipment.
- Degraded sandbags may rupture when removed, spilling sand.
- Sand is easily transported by runoff if bag is damaged or ruptured.
- Installation can be labor intensive.
- Durability of sandbags is somewhat limited and bags may need to be replaced when installation is required for longer than 6 months. When used to detain concentrated flows, maintenance requirements increase.
- Burlap should not be used for sandbags.

Implementation

General

A sandbag barrier consists of a row of sand-filled bags placed on a level contour. When appropriately placed, a sandbag barrier intercepts and slows sheet flow runoff, causing temporary ponding. The temporary ponding allows sediment to settle. Sand-filled bags have limited porosity, which is further limited as the fine sand tends to quickly plug with sediment, limiting or completely blocking the rate of flow through the barrier. If a porous barrier is desired, consider SE-1, Silt Fence, SE-5, Fiber Rolls, SE-6, Gravel Bag Berms or SE-14, Biofilter Bags. Sandbag barriers also interrupt the slope length and thereby reduce erosion by reducing the tendency of sheet flows to concentrate into rivulets which erode rills, and ultimately gullies, into disturbed, sloped soils. Sandbag barriers are similar to gravel bag berms, but less porous. Generally, sandbag barriers should be used in conjunction with temporary soil stabilization controls up slope to provide effective erosion and sediment control.

Design and Layout

- Locate sandbag barriers on a level contour.
- When used for slope interruption, the following slope/sheet flow length combinations apply:
  - Slope inclination of 4:1 (H:V) or flatter: Sandbags should be placed at a maximum interval of 20 ft, with the first row near the slope toe.
  - Slope inclination between 4:1 and 2:1 (H:V): Sandbags should be placed at a maximum interval of 15 ft. (a closer spacing is more effective), with the first row near the slope toe.

    Slope inclination 2:1 (H:V) or greater: Sandbags should be placed at a maximum interval of 10 ft. (a closer spacing is more effective), with the first row near the slope toe.

- Turn the ends of the sandbag barrier up slope to prevent runoff from going around the barrier.
- Allow sufficient space up slope from the barrier to allow ponding, and to provide room for sediment storage.
- For installation near the toe of the slope, sand bag barriers should be set back from the slope toe to facilitate cleaning. Where specific site conditions do not allow for a set-back, the sand bag barrier may be constructed on the toe of the slope. To prevent flows behind the barrier, bags can be placed perpendicular to a berm to serve as cross barriers.
- Drainage area should not exceed 5 acres.
- Stack sandbags at least three bags high.
- Butt ends of bags tightly.
- Overlap butt joints of row beneath with each successive row.
- Use a pyramid approach when stacking bags.
- In non-traffic areas
  - Height = 18 in. maximum
  - Top width = 24 in. minimum for three or more layer construction
  - Side slope = 2:1 (H:V) or flatter
- In construction traffic areas
  - Height = 12 in. maximum
  - Top width = 24 in. minimum for three or more layer construction.
  - Side slopes = 2:1 (H:V) or flatter.
- See typical sandbag barrier installation details at the end of this fact sheet.

Materials

- ***Sandbag Material:*** Sandbag should be woven polypropylene, polyethylene or polyamide fabric, minimum unit weight of 4 ounces/yd^2, Mullen burst strength exceeding 300 lb/in^2 in conformance with the requirements in ASTM designation D3786, and ultraviolet stability exceeding 70% in conformance with the requirements in ASTM designation D4355. Use of burlap is not an acceptable substitute, as sand can more easily mobilize out of burlap.
- ***Sandbag Size:*** Each sand-filled bag should have a length of 18 in., width of 12 in., thickness of 3 in., and mass of approximately 33 lbs. Bag dimensions are nominal, and may vary based on locally available materials.

- ***Fill Material:*** All sandbag fill material should be non-cohesive, Class 3 (Caltrans Standard Specification, Section 25) permeable material free from clay and deleterious material, such as recycled concrete or asphalt..

Costs

Empty sandbags cost $0.25 - $0.75. Average cost of fill material is $8 per yd^3. Additional labor is required to fill the bags. Pre-filled sandbags are more expensive at $1.50 - $2.00 per bag. These costs are based upon vendor research.

Inspection and Maintenance

- BMPs must be inspected in accordance with General Permit requirements for the associated project type and risk level. It is recommended that at a minimum, BMPs be inspected weekly, prior to forecasted rain events, daily during extended rain events, and after the conclusion of rain events.
- Sandbags exposed to sunlight will need to be replaced every two to three months due to degradation of the bags.
- Reshape or replace sandbags as needed.
- Repair washouts or other damage as needed.
- Sediment that accumulates behind the BMP should be periodically removed in order to maintain BMP effectiveness. Sediment should be removed when the sediment accumulation reaches one-third of the barrier height.
- Remove sandbags when no longer needed and recycle sand fill whenever possible and properly dispose of bag material. Remove sediment accumulation, and clean, re-grade, and stabilize the area.

References

Standard Specifications for Construction of Local Streets and Roads, California Department of Transportation (Caltrans), July 2002.

Stormwater Quality Handbooks - Construction Site Best Management Practices (BMPs) Manual, State of California Department of Transportation (Caltrans), March 2003.

Erosion and Sediment Control Manual, Oregon Department of Environmental Quality, February 2005.

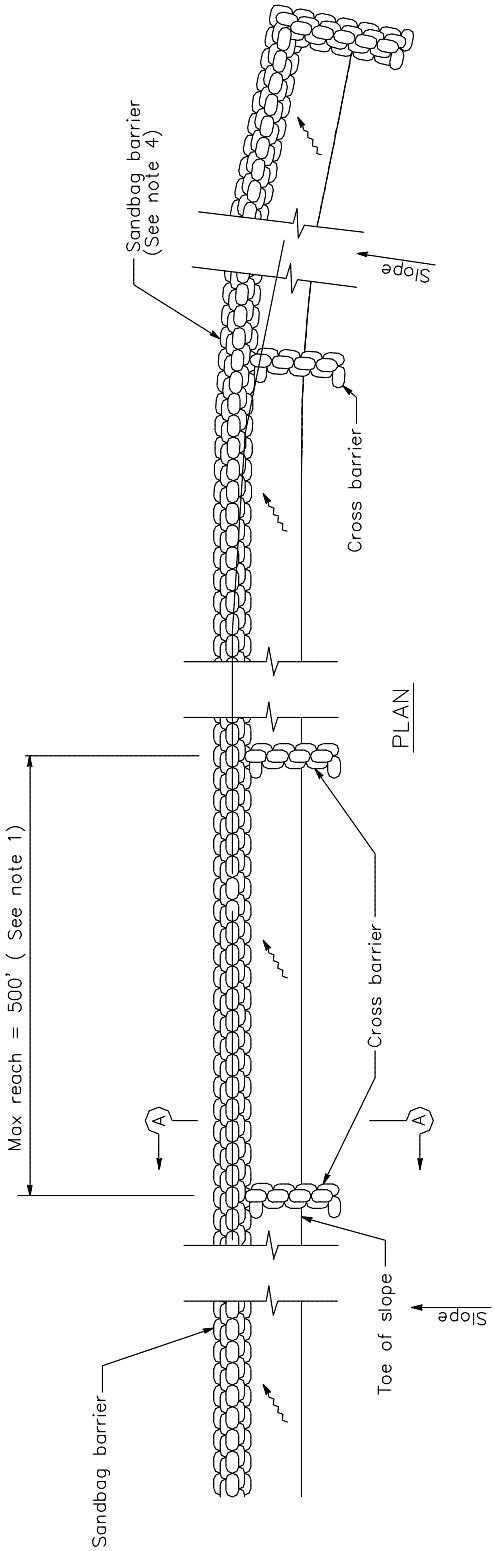

SANDBAG BARRIER

NOTES

1. Construct the length of each reach so that the change in base elevation along the reach does not exceed 1/2 the height of the linear barrier. In no case shall the reach length exceed 500'.
2. Place sandbags tightly.
3. Dimension may vary to fit field condition.
4. Sandbag barrier shall be a minimum of 3 bags high.
5. The end of the barrier shall be turned up slope.
6. Cross barriers shall be a min of 1/2 and a max of 2/3 the height of the linear barrier.
7. Sandbag rows and layers shall be staggered to eliminate gaps.

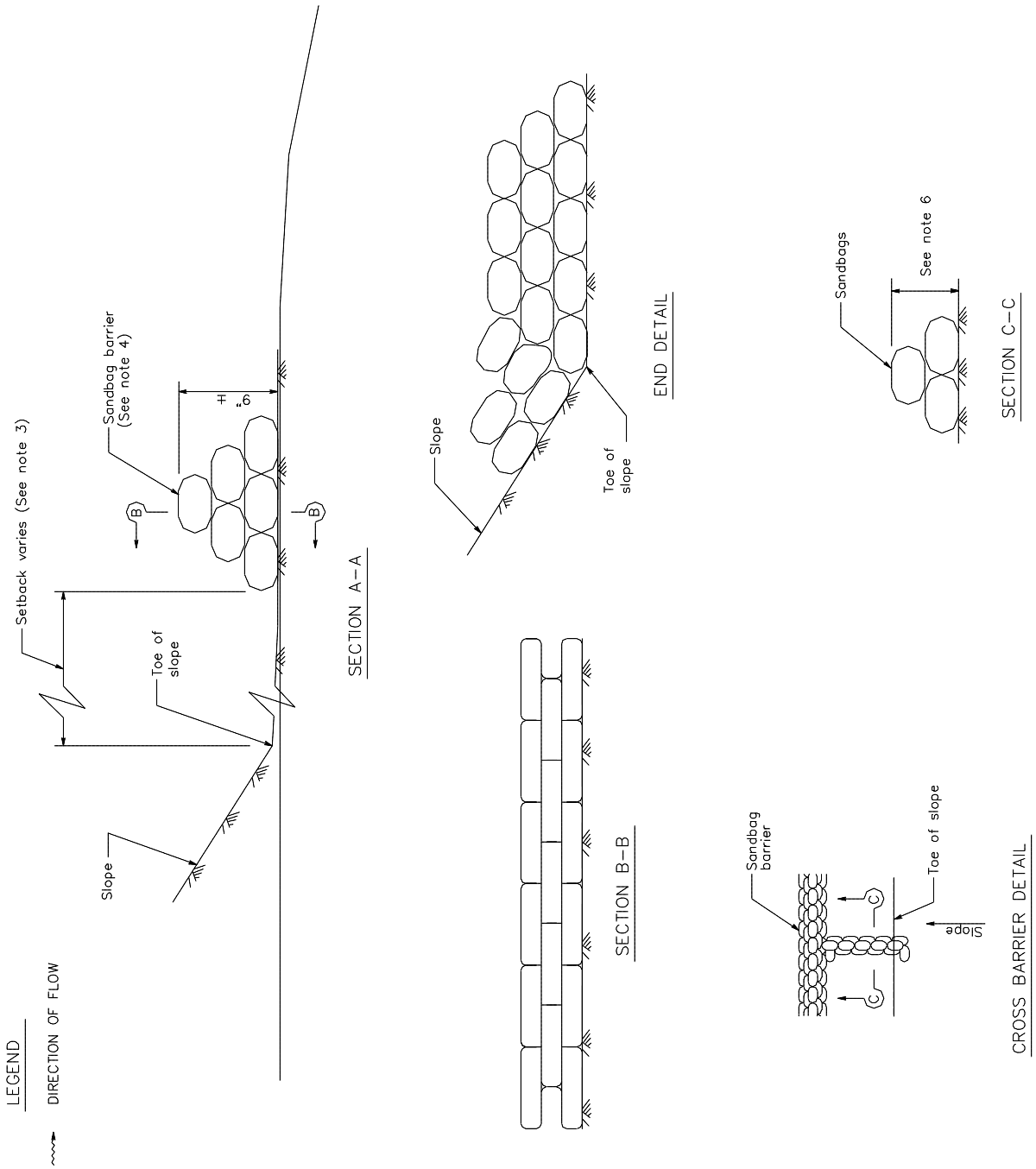
LEGEND
DIRECTION OF FLOW
Setback varies (See note 3)
Sandbag barrier
(See note 4)
H
9"
B
B
Toe of
slope
Slope
SECTION A–A
Slope
Toe of
slope
END DETAIL
SECTION B–B
Sandbags
See note 6
SECTION C–C
Sandbag
barrier
Toe of slope
C
C
Slope
CROSS BARRIER DETAIL

Straw Bale Barrier SE-9

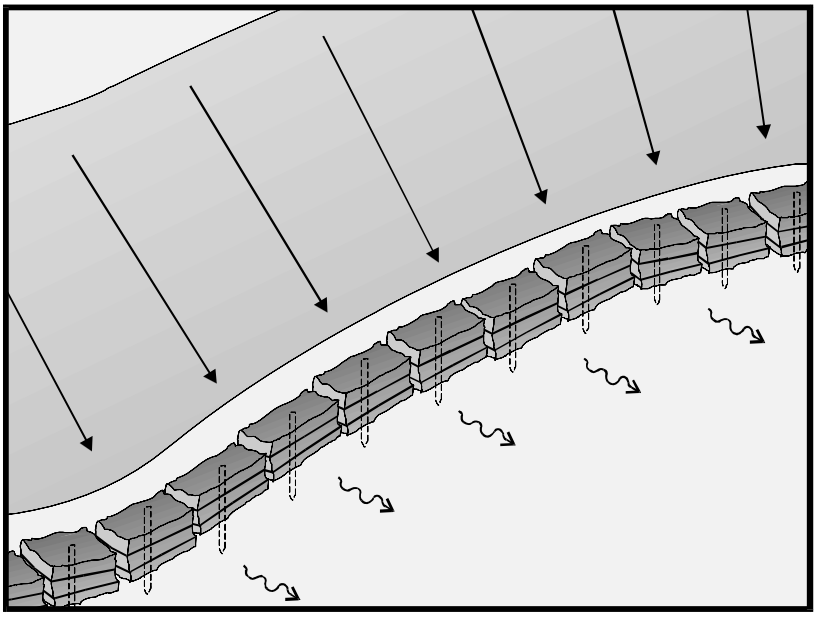

Categories

EC	Erosion Control	☒
SE	Sediment Control	☑
TC	Tracking Control	
WE	Wind Erosion Control	
NS	Non-Stormwater Management Control	
WM	Waste Management and Materials Pollution Control	

Legend:

☑ **Primary Objective**

☒ **Secondary Objective**

Targeted Constituents

Sediment	☑
Nutrients	
Trash	
Metals	
Bacteria	
Oil and Grease	
Organics	

Potential Alternatives

SE-1 Silt Fence

SE-5 Fiber Rolls

SE-6 Gravel Bag Berm

SE-8 Sandbag Barrier

Description and Purpose

A straw bale barrier is a series of straw bales placed on a level contour to intercept sheet flows. Straw bale barriers pond sheet- flow runoff, allowing sediment to settle out.

Suitable Applications

Straw bale barriers may be suitable:

- As a linear sediment control measure:
  - Below the toe of slopes and erodible slopes
  - As sediment traps at culvert/pipe outlets
  - Below other small cleared areas
  - Along the perimeter of a site
  - Down slope of exposed soil areas
  - Around temporary stockpiles and spoil areas
  - Parallel to a roadway to keep sediment off paved areas
  - Along streams and channels
- As linear erosion control measure:
  - Along the face and at grade breaks of exposed and erodible slopes to shorten slope length and spread runoff as sheet flow

- At the top of slopes to divert runoff away from disturbed slopes
- As check dams across mildly sloped construction roads

Limitations

Straw bale barriers:

- Are not to be used for extended periods of time because they tend to rot and fall apart
- Are suitable only for sheet flow on slopes of 10 % or flatter
- Are not appropriate for large drainage areas, limit to one acre or less
- May require constant maintenance due to rotting
- Are not recommended for concentrated flow, inlet protection, channel flow, and live streams
- Cannot be made of bale bindings of jute or cotton
- Require labor-intensive installation and maintenance
- Cannot be used on paved surfaces
- Should not to be used for drain inlet protection
- Should not be used on lined ditches
- May introduce undesirable non-native plants to the area

Implementation

General

A straw bale barrier consists of a row of straw bales placed on a level contour. When appropriately placed, a straw bale barrier intercepts and slows sheet flow runoff, causing temporary ponding. The temporary ponding provides quiescent conditions allowing sediment to settle. Straw bale barriers also interrupt the slope length and thereby reduce erosion by reducing the tendency of sheet flows to concentrate into rivulets, which erode rills, and ultimately gullies, into disturbed, sloped soils.

Straw bale barriers have not been as effective as expected due to improper use. These barriers have been placed in streams and drainage ways where runoff volumes and velocities have caused the barriers to wash out. In addition, failure to stake and entrench the straw bale has allowed undercutting and end flow. Use of straw bale barriers in accordance with this BMP should produce acceptable results.

Design and Layout

- Locate straw bale barriers on a level contour.
  - Slopes up to 10:1 (H:V): Straw bales should be placed at a maximum interval of 50 ft (a closer spacing is more effective), with the first row near the toe of slope.
  - Slopes greater than 10:1 (H:V): Not recommended.

- Turn the ends of the straw bale barrier up slope to prevent runoff from going around the barrier.
- Allow sufficient space up slope from the barrier to allow ponding, and to provide room for sediment storage.
- For installation near the toe of the slope, consider moving the barrier away from the slope toe to facilitate cleaning. To prevent flow behind the barrier, sand bags can be placed perpendicular to the barrier to serve as cross barriers.
- Drainage area should not exceed 1 acre, or 0.25 acre per 100 ft of barrier.
- Maximum flow path to the barrier should be limited to 100 ft.
- Straw bale barriers should consist of two parallel rows.
  - Butt ends of bales tightly
  - Stagger butt joints between front and back row
  - Each row of bales must be trenched in and firmly staked
- Straw bale barriers are limited in height to one bale laid on its side.
- Anchor bales with either two wood stakes or four bars driven through the bale and into the soil. Drive the first stake towards the butt joint with the adjacent bale to force the bales together.
- See attached figure for installation details.

Materials

- ***Straw Bale Size:*** Each straw bale should be a minimum of 14 in. wide, 18 in. in height, 36 in. in length and should have a minimum mass of 50 lbs. The straw bale should be composed entirely of vegetative matter, except for the binding material.
- ***Bale Bindings:*** Bales should be bound by steel wire, nylon or polypropylene string placed horizontally. Jute and cotton binding should not be used. Baling wire should be a minimum diameter of 14 gauge. Nylon or polypropylene string should be approximately 12 gauge in diameter with a breaking strength of 80 lbs force.
- ***Stakes:*** Wood stakes should be commercial quality lumber of the size and shape shown on the plans. Each stake should be free from decay, splits or cracks longer than the thickness of the stake, or other defects that would weaken the stakes and cause the stakes to be structurally unsuitable. Steel bar reinforcement should be equal to a #4 designation or greater. End protection should be provided for any exposed bar reinforcement.

Costs

Straw bales cost $5 - $7 each. Adequate labor should be budgeted for installation and maintenance.

Inspection and Maintenance

Maintenance

- Inspect BMPs prior to forecast rain, daily during extended rain events, after rain events, weekly during the rainy season, and at two-week intervals during the non-rainy season.
- Straw bales degrade, especially when exposed to moisture. Rotting bales will need to be replaced on a regular basis.
- Replace or repair damaged bales as needed.
- Repair washouts or other damages as needed.
- Sediment that accumulates in the BMP must be periodically removed in order to maintain BMP effectiveness. Sediment should be removed when the sediment accumulation reaches one-third of the barrier height. Sediment removed during maintenance may be incorporated into earthwork on the site or disposed at an appropriate location.
- Remove straw bales when no longer needed. Remove sediment accumulation, and clean, re-grade, and stabilize the area. Removed sediment should be incorporated in the project or disposed of.

References

Stormwater Quality Handbooks - Construction Site Best Management Practices (BMPs) Manual, State of California Department of Transportation (Caltrans), November 2000.

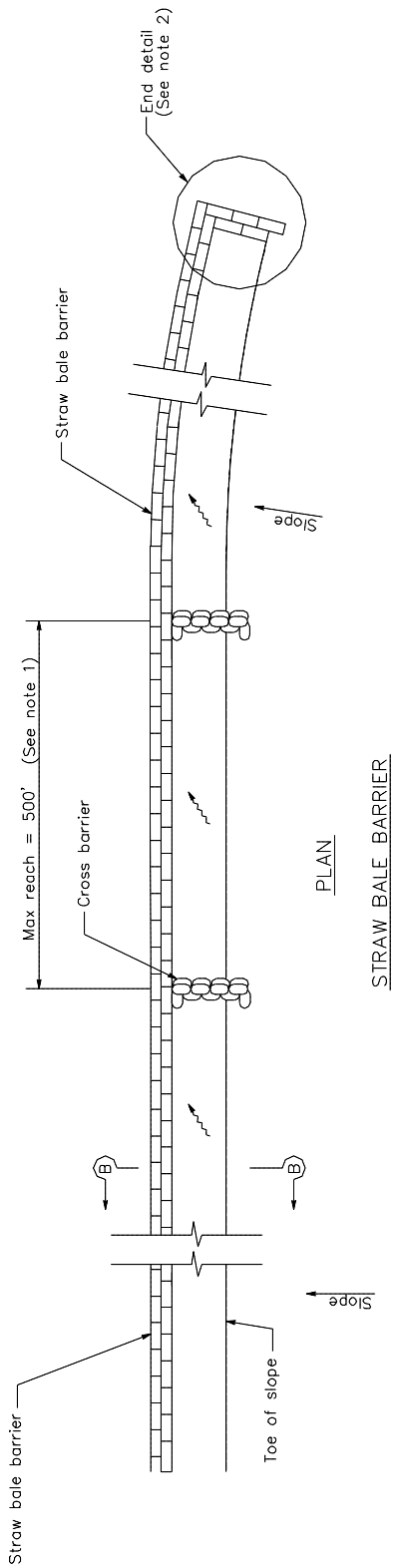

PLAN

STRAW BALE BARRIER

LEGEND

DIRECTION OF FLOW

NOTES

1. Construct the length of each reach so that the change in base elevation along the reach does not exceed 1/2 the height of the linear barrier. In no case shall the reach length exceed 500'.
2. The end of barrier shall be turned up slope.
3. Dimension may vary to fit field condition.
4. Stake dimensions are nominal.
5. Place straw bales tightly together.
6. Tamp embedment spoils against sides of installed bales.
7. Drive angled wood stake before vertical stake to ensure tight abutment to adjacent bale.
8. Sandbag cross barriers should be a min of 1/2 and a max of 2/3 the height of the linear barrier.
9. Sandbag rows and layers should be offset to eliminate gaps.

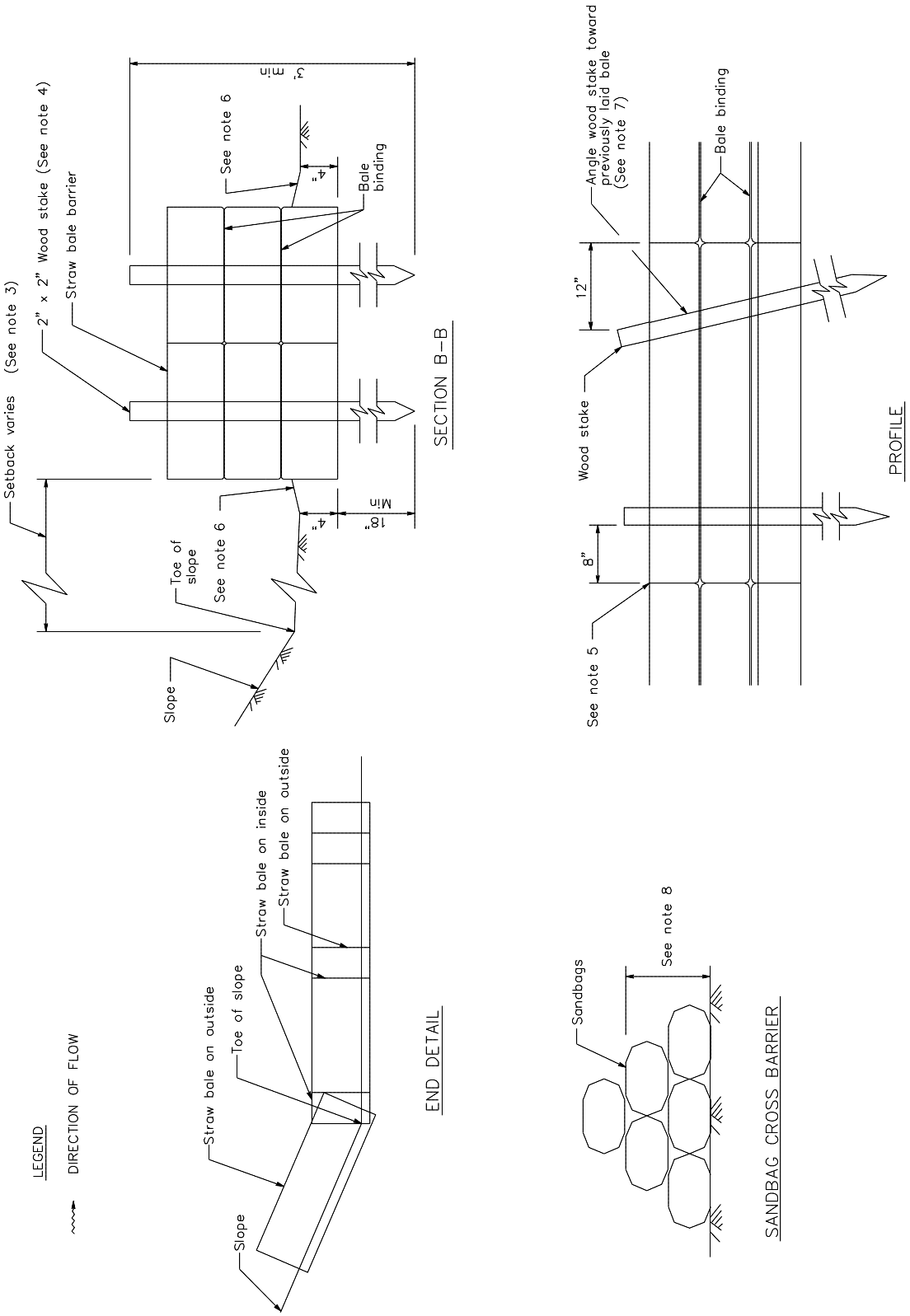
Setback varies (See note 3)
2" x 2" Wood stake (See note 4)
Straw bale barrier
See note 6
3' Min
4"
Bale binding
Toe of slope
See note 6
4"
10" Min
Slope
SECTION B–B
Angle wood stake toward previously laid bale (See note 7)
Bale binding
12"
Wood stake
8"
See note 5
PROFILE
LEGEND
DIRECTION OF FLOW
Straw bale on outside
Toe of slope
Straw bale on inside
Straw bale on outside
Slope
END DETAIL
Sandbags
See note 8
SANDBAG CROSS BARRIER

Storm Drain Inlet Protection SE-10

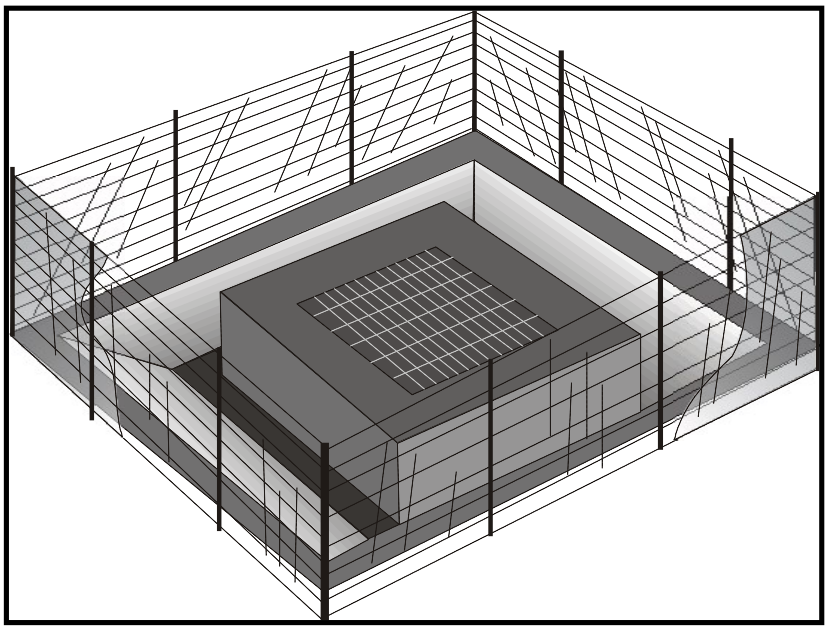

Categories

EC	Erosion Control	
SE	Sediment Control	☑
TC	Tracking Control	
WE	Wind Erosion Control	
NS	Non-Stormwater Management Control	
WM	Waste Management and Materials Pollution Control	

Legend:

☑ **Primary Category**

☒ **Secondary Category**

Targeted Constituents

Sediment	☑
Nutrients	
Trash	☒
Metals	
Bacteria	
Oil and Grease	
Organics	

Potential Alternatives

SE-1 Silt Fence

SE-5 Fiber Rolls

SE-6 Gravel Bag Berm

SE-8 Sandbag Barrier

SE-14 Biofilter Bags

Description and Purpose

Storm drain inlet protection consists of a sediment filter or an impounding area in, around or upstream of a storm drain, drop inlet, or curb inlet. Storm drain inlet protection measures temporarily pond runoff before it enters the storm drain, allowing sediment to settle. Some filter configurations also remove sediment by filtering, but usually the ponding action results in the greatest sediment reduction. Temporary geotextile storm drain inserts attach underneath storm drain grates to capture and filter storm water.

Suitable Applications

Every storm drain inlet receiving runoff from unstabilized or otherwise active work areas should be protected. Inlet protection should be used in conjunction with other erosion and sediment controls to prevent sediment-laden stormwater and non-stormwater discharges from entering the storm drain system.

Limitations

- Drainage area should not exceed 1 acre.
- In general straw bales should not be used as inlet protection.
- Requires an adequate area for water to pond without encroaching into portions of the roadway subject to traffic.

- Sediment removal may be inadequate to prevent sediment discharges in high flow conditions or if runoff is heavily sediment laden. If high flow conditions are expected, use other onsite sediment trapping techniques in conjunction with inlet protection.
- Frequent maintenance is required.
- Limit drainage area to 1 acre maximum. For drainage areas larger than 1 acre, runoff should be routed to a sediment-trapping device designed for larger flows. See BMPs SE-2, Sediment Basin, and SE-3, Sediment Traps.
- Excavated drop inlet sediment traps are appropriate where relatively heavy flows are expected, and overflow capability is needed.

Implementation

General

Inlet control measures presented in this handbook should not be used for inlets draining more than one acre. Runoff from larger disturbed areas should be first routed through SE-2, Sediment Basin or SE-3, Sediment Trap and/or used in conjunction with other drainage control, erosion control, and sediment control BMPs to protect the site. Different types of inlet protection are appropriate for different applications depending on site conditions and the type of inlet. Alternative methods are available in addition to the methods described/shown herein such as prefabricated inlet insert devices, or gutter protection devices.

Design and Layout

Identify existing and planned storm drain inlets that have the potential to receive sediment-laden surface runoff. Determine if storm drain inlet protection is needed and which method to use.

- The key to successful and safe use of storm drain inlet protection devices is to know where runoff that is directed toward the inlet to be protected will pond or be diverted as a result of installing the protection device.
  - Determine the acceptable location and extent of ponding in the vicinity of the drain inlet. The acceptable location and extent of ponding will influence the type and design of the storm drain inlet protection device.
  - Determine the extent of potential runoff diversion caused by the storm drain inlet protection device. Runoff ponded by inlet protection devices may flow around the device and towards the next downstream inlet. In some cases, this is acceptable; in other cases, serious erosion or downstream property damage can be caused by these diversions. The possibility of runoff diversions will influence whether or not storm drain inlet protection is suitable; and, if suitable, the type and design of the device.
- The location and extent of ponding, and the extent of diversion, can usually be controlled through appropriate placement of the inlet protection device. In some cases, moving the inlet protection device a short distance upstream of the actual inlet can provide more efficient sediment control, limit ponding to desired areas, and prevent or control diversions.

- Six types of inlet protection are presented below. However, it is recognized that other effective methods and proprietary devices exist and may be selected.
  - Silt Fence: Appropriate for drainage basins with less than a 5% slope, sheet flows, and flows under 0.5 cfs.
  - Excavated Drop Inlet Sediment Trap: An excavated area around the inlet to trap sediment (SE-3).
  - Gravel bag barrier: Used to create a small sediment trap upstream of inlets on sloped, paved streets. Appropriate for sheet flow or when concentrated flow may exceed 0.5 cfs, and where overtopping is required to prevent flooding.
  - Block and Gravel Filter: Appropriate for flows greater than 0.5 cfs.
  - Temporary Geotextile Storm drain Inserts: Different products provide different features. Refer to manufacturer details for targeted pollutants and additional features.
  - Biofilter Bag Barrier: Used to create a small retention area upstream of inlets and can be located on pavement or soil. Biofilter bags slowly filter runoff allowing sediment to settle out. Appropriate for flows under 0.5 cfs.
- Select the appropriate type of inlet protection and design as referred to or as described in this fact sheet.
- Provide area around the inlet for water to pond without flooding structures and property.
- Grates and spaces around all inlets should be sealed to prevent seepage of sediment-laden water.
- Excavate sediment sumps (where needed) 1 to 2 ft with 2:1 side slopes around the inlet.

Installation

- ***DI Protection Type 1 - Silt Fence -*** Similar to constructing a silt fence; see BMP SE-1, Silt Fence. Do not place fabric underneath the inlet grate since the collected sediment may fall into the drain inlet when the fabric is removed or replaced and water flow through the grate will be blocked resulting in flooding. See typical Type 1 installation details at the end of this fact sheet.

  1. Excavate a trench approximately 6 in. wide and 6 in. deep along the line of the silt fence inlet protection device.
  2. Place 2 in. by 2 in. wooden stakes around the perimeter of the inlet a maximum of 3 ft apart and drive them at least 18 in. into the ground or 12 in. below the bottom of the trench. The stakes should be at least 48 in.
  3. Lay fabric along bottom of trench, up side of trench, and then up stakes. See SE-1, Silt Fence, for details. The maximum silt fence height around the inlet is 24 in.
  4. Staple the filter fabric (for materials and specifications, see SE-1, Silt Fence) to wooden stakes. Use heavy-duty wire staples at least 1 in. in length.

5. Backfill the trench with gravel or compacted earth all the way around.

- ***DI Protection Type 2 - Excavated Drop Inlet Sediment Trap -*** Install filter fabric fence in accordance with DI Protection Type 1. Size excavated trap to provide a minimum storage capacity calculated at the rate 67 yd^3/acre of drainage area. See typical Type 2 installation details at the end of this fact sheet.

- ***DI Protection Type 3 - Gravel bag -*** Flow from a severe storm should not overtop the curb. In areas of high clay and silts, use filter fabric and gravel as additional filter media. Construct gravel bags in accordance with SE-6, Gravel Bag Berm. Gravel bags should be used due to their high permeability. See typical Type 3 installation details at the end of this fact sheet.

  1. Construct on gently sloping street.

  2. Leave room upstream of barrier for water to pond and sediment to settle.

  3. Place several layers of gravel bags – overlapping the bags and packing them tightly together.

  4. Leave gap of one bag on the top row to serve as a spillway. Flow from a severe storm (e.g., 10 year storm) should not overtop the curb.

- ***DI Protection Type 4 – Block and Gravel Filter -*** Block and gravel filters are suitable for curb inlets commonly used in residential, commercial, and industrial construction. See typical Type 4 installation details at the end of this fact sheet.

  1. Place hardware cloth or comparable wire mesh with 0.5 in. openings over the drop inlet so that the wire extends a minimum of 1 ft beyond each side of the inlet structure. If more than one strip is necessary, overlap the strips. Place woven geotextile over the wire mesh.

  2. Place concrete blocks lengthwise on their sides in a single row around the perimeter of the inlet, so that the open ends face outward, not upward. The ends of adjacent blocks should abut. The height of the barrier can be varied, depending on design needs, by stacking combinations of blocks that are 4 in., 8 in., and 12 in. wide. The row of blocks should be at least 12 in. but no greater than 24 in. high.

  3. Place wire mesh over the outside vertical face (open end) of the concrete blocks to prevent stone from being washed through the blocks. Use hardware cloth or comparable wire mesh with 0.5 in. opening.

  4. Pile washed stone against the wire mesh to the top of the blocks. Use 0.75 to 3 in.

- ***DI Protection Type 5 – Temporary Geotextile Insert (proprietary)*** – Many types of temporary inserts are available. Most inserts fit underneath the grate of a drop inlet or inside of a curb inlet and are fastened to the outside of the grate or curb. These inserts are removable and many can be cleaned and reused. Installation of these inserts differs between manufacturers. Please refer to manufacturer instruction for installation of proprietary devices.

- ***DI Protection Type 6 - Biofilter bags*** – Biofilter bags may be used as a substitute for gravel bags in low-flow situations. Biofilter bags should conform to specifications detailed in SE-14, Biofilter bags.

  1. Construct in a gently sloping area.
  2. Biofilter bags should be placed around inlets to intercept runoff flows.
  3. All bag joints should overlap by 6 in.
  4. Leave room upstream for water to pond and for sediment to settle out.
  5. Stake bags to the ground as described in the following detail. Stakes may be omitted if bags are placed on a paved surface.

Costs

- Average annual cost for installation and maintenance of DI Type 1-4 and 6 (one year useful life) is $200 per inlet.
- Temporary geotextile inserts are proprietary and cost varies by region. These inserts can often be reused and may have greater than 1 year of use if maintained and kept undamaged. Average cost per insert ranges from $50-75 plus installation, but costs can exceed $100. This cost does not include maintenance.

Inspection and Maintenance

- BMPs must be inspected in accordance with General Permit requirements for the associated project type and risk level. It is recommended that at a minimum, BMPs be inspected weekly, prior to forecasted rain events, daily during extended rain events, and after the conclusion of rain events.
- Silt Fences. If the fabric becomes clogged, torn, or degrades, it should be replaced. Make sure the stakes are securely driven in the ground and are in good shape (i.e., not bent, cracked, or splintered, and are reasonably perpendicular to the ground). Replace damaged stakes. At a minimum, remove the sediment behind the fabric fence when accumulation reaches one-third the height of the fence or barrier height.
- Gravel Filters. If the gravel becomes clogged with sediment, it should be carefully removed from the inlet and either cleaned or replaced. Since cleaning gravel at a construction site may be difficult, consider using the sediment-laden stone as fill material and put fresh stone around the inlet. Inspect bags for holes, gashes, and snags, and replace bags as needed. Check gravel bags for proper arrangement and displacement.
- Sediment that accumulates in the BMP should be periodically removed in order to maintain BMP effectiveness. Sediment should be removed when the sediment accumulation reaches one-third of the barrier height.
- Inspect and maintain temporary geotextile insert devices according to manufacturer's specifications.
- Remove storm drain inlet protection once the drainage area is stabilized.

- Clean and regrade area around the inlet and clean the inside of the storm drain inlet, as it should be free of sediment and debris at the time of final inspection.

References

Stormwater Quality Handbooks - Construction Site Best Management Practices (BMPs) Manual, State of California Department of Transportation (Caltrans), March 2003.

Stormwater Management Manual for The Puget Sound Basin, Washington State Department of Ecology, Public Review Draft, 1991.

Erosion and Sediment Control Manual, Oregon Department of Environmental Quality, February 2005.

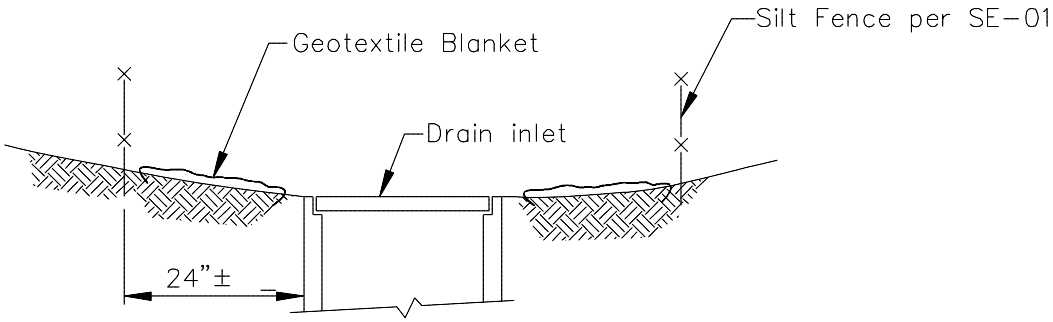

SECTION A–A

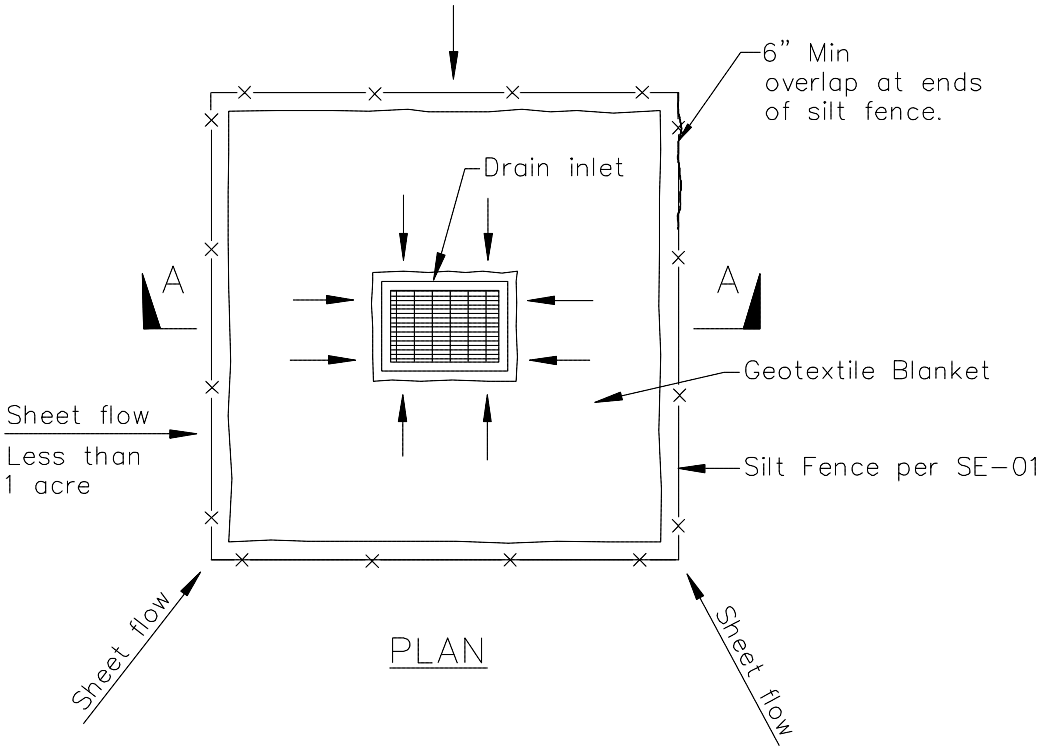

PLAN

DI PROTECTION TYPE 1
NOT TO SCALE

NOTES:

1. For use in areas where grading has been completed and final soil stabilization and seeding are pending.
2. Not applicable in paved areas.
3. Not applicable with concentrated flows.

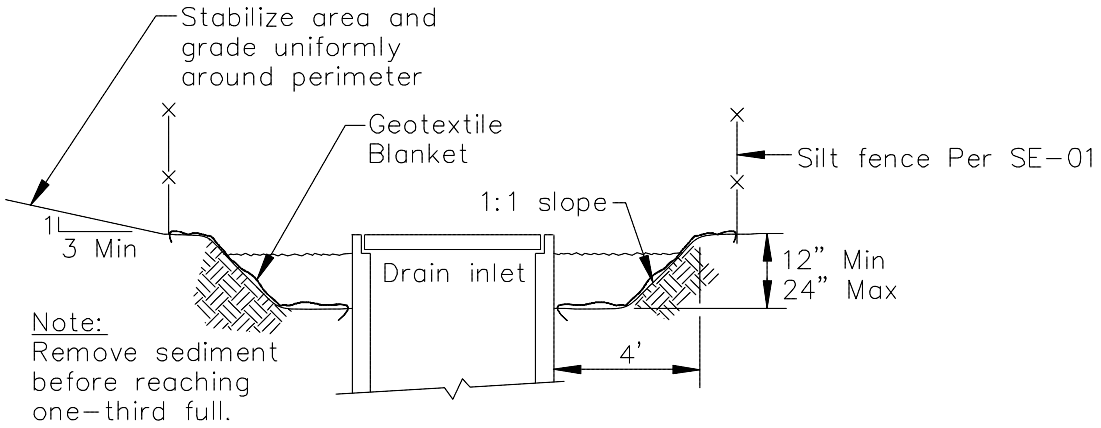

Section A–A

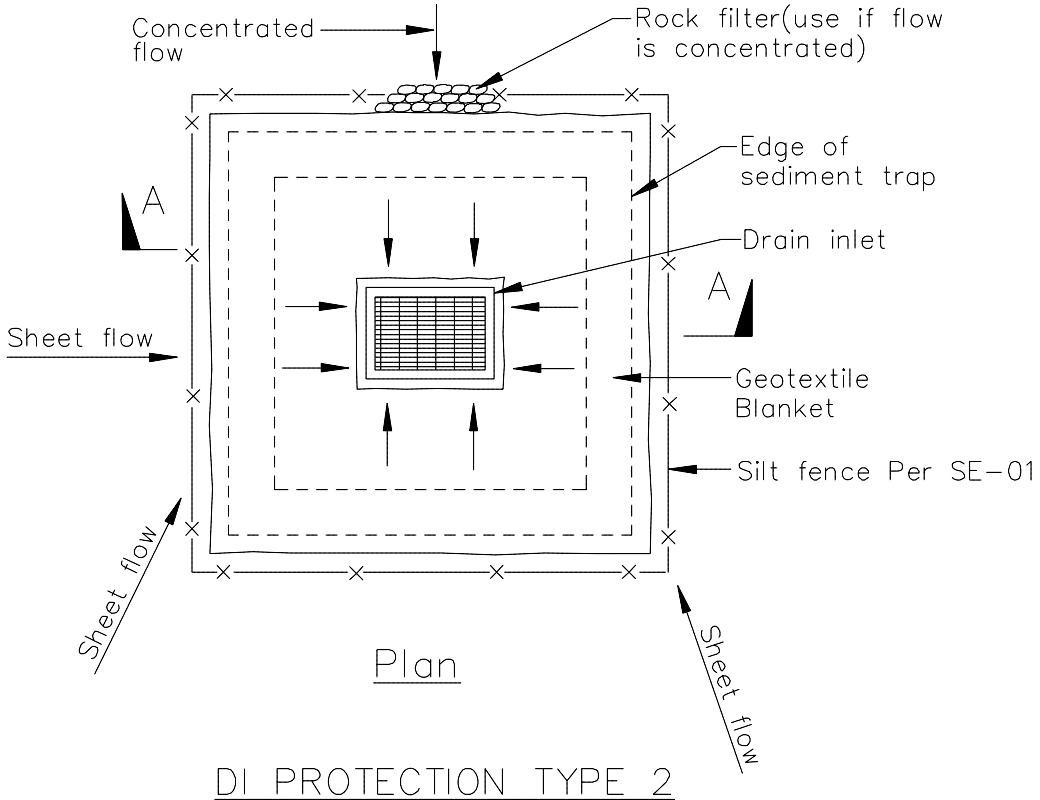

Plan

DI PROTECTION TYPE 2
NOT TO SCALE

Notes
1. For use in cleared and grubbed and in graded areas.
2. Shape basin so that longest inflow area faces longest length of trap.
3. For concentrated flows, shape basin in 2:1 ratio with length oriented towards direction of flow.

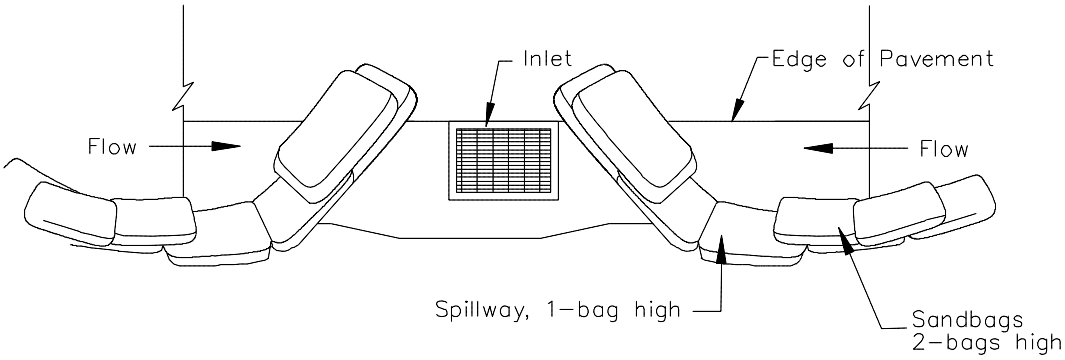

TYPICAL PROTECTION FOR INLET ON SUMP

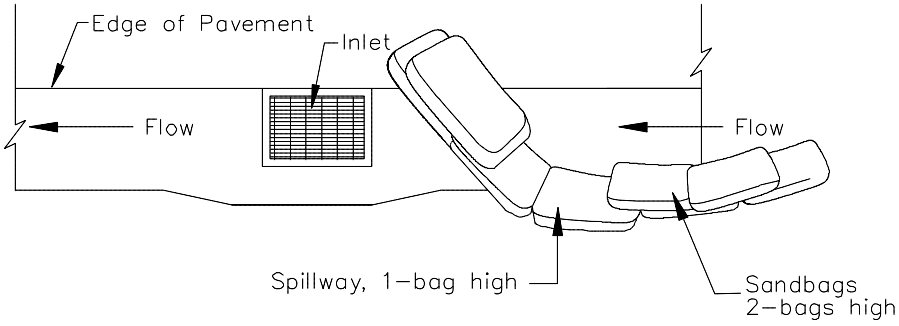

TYPICAL PROTECTION FOR INLET ON GRADE

NOTES:

1. Intended for short–term use.
2. Use to inhibit non–storm water flow.
3. Allow for proper maintenance and cleanup.
4. Bags must be removed after adjacent operation is completed
5. Not applicable in areas with high silts and clays without filter fabric.

DI PROTECTION TYPE 3
NOT TO SCALE

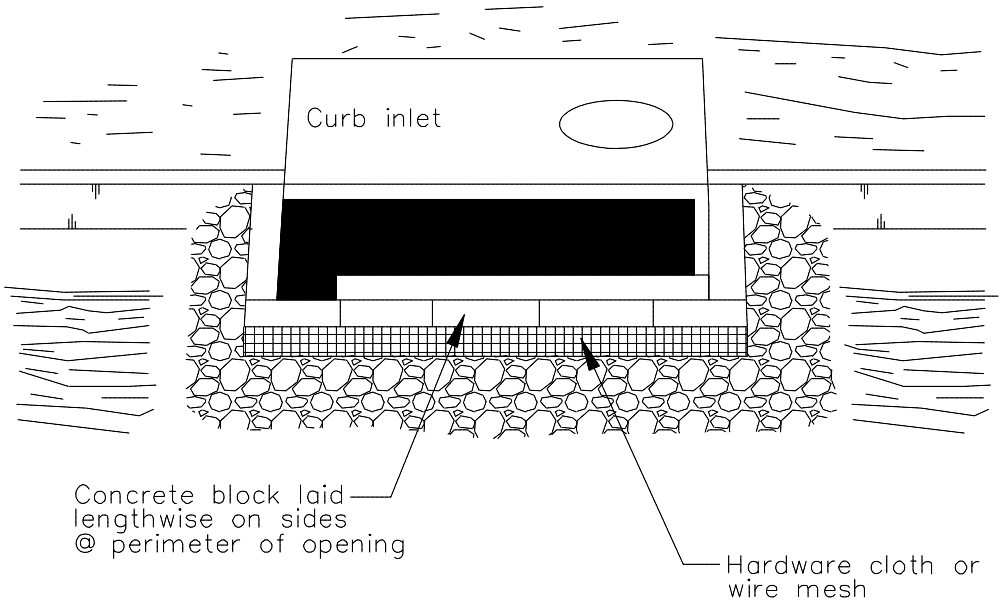

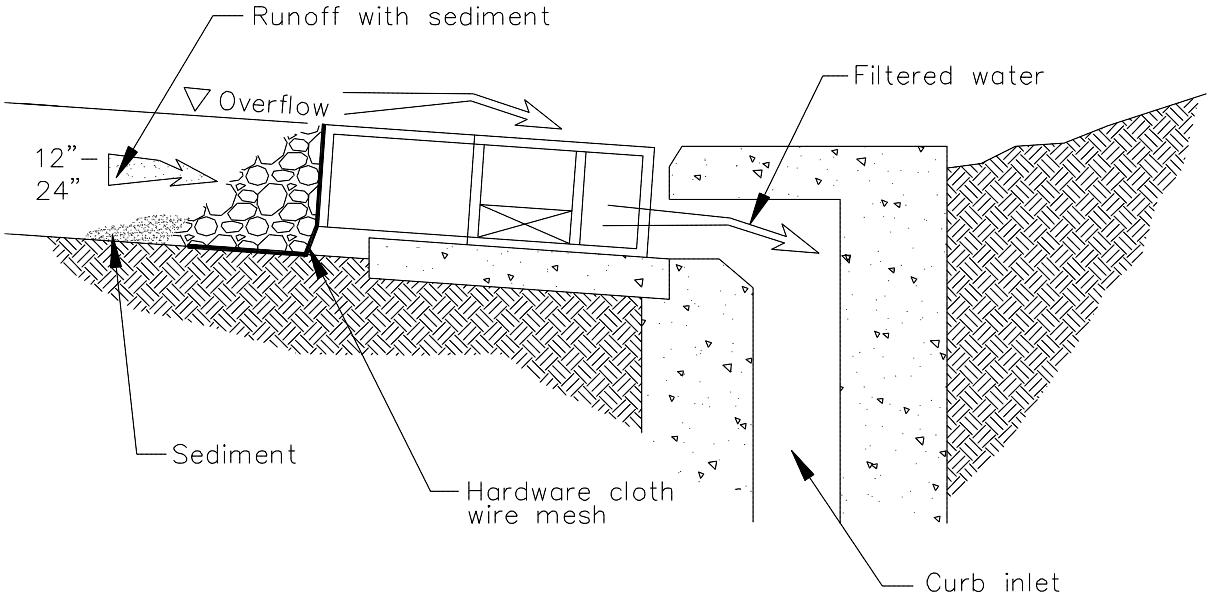

DI PROTECTION – TYPE 4

NOT TO SCALE

Active Treatment Systems SE-11

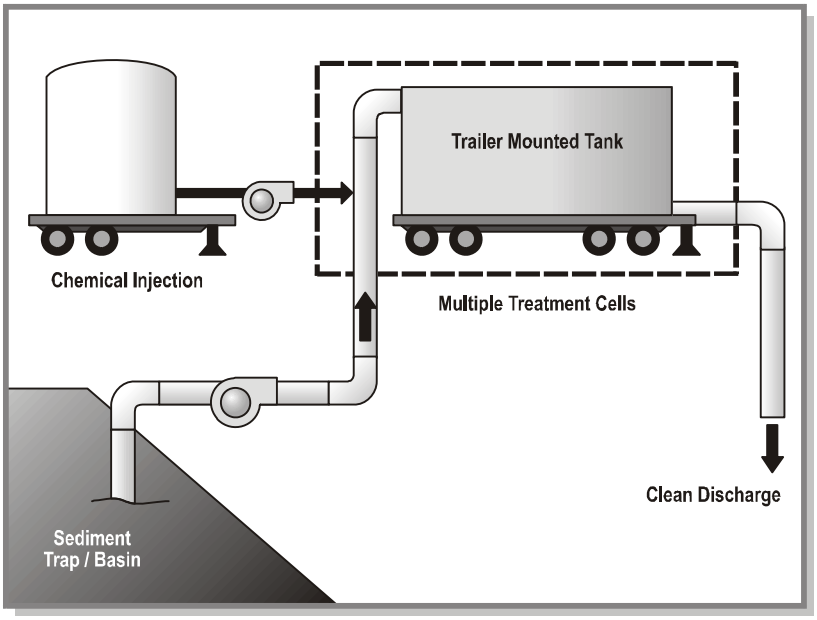

Categories

EC	Erosion Control	☑
SE	Sediment Control	
TC	Tracking Control	
WE	Wind Erosion Control	
NS	Non-Stormwater Management Control	
WM	Waste Management and Materials Pollution Control	

Legend:

☑ **Primary Category**

☒ **Secondary Category**

Targeted Constituents

Sediment	☑
Nutrients	
Trash	
Metals	
Bacteria	
Oil and Grease	
Organics	

Potential Alternatives

None

Description and Purpose

Active Treatment Systems (ATS) reduce turbidity of construction site runoff by introducing chemicals to stormwater through direct dosing or an electrical current to enhance flocculation, coagulation, and settling of the suspended sediment. Coagulants and flocculants are used to enhance settling and removal of suspended sediments and generally include inorganic salts and polymers (USACE, 2001). The increased flocculation aids in sedimentation and ability to remove fine suspended sediments, thus reducing stormwater runoff turbidity and improving water quality.

Suitable Applications

ATS can reliably provide exceptional reductions of turbidity and associated pollutants and should be considered where turbid discharges to sediment and turbidity sensitive waters cannot be avoided using traditional BMPs. Additionally, it may be appropriate to use an ATS when site constraints inhibit the ability to construct a correctly sized sediment basin, when clay and/or highly erosive soils are present, or when the site has very steep or long slope lengths.

Limitations

Dischargers choosing to utilize chemical treatment in an ATS must follow all guidelines of the Construction General Permit Attachment F – Active Treatment System Requirements. General limitations are as follows:

- Numeric Effluent Limit (NEL) for all discharges (10 NTU daily flow-weighted average)
- Limited availability of chemical residual testing procedures that meet permit requirements for flow-through treatment
- Specific field and classroom ATS training required to operate equipment
- Batch treatment requires extensive toxicity testing of effluent
- Batch treatment requires large footprint to accommodate treatment cells
- Requires additional filtration to remove residual floc and treatment chemicals prior to discharge
- Petroleum based polymers should not be used
- Requires site-specific design and equipment
- Limited discharge rates depending on receiving water body
- Labor intensive operation and maintenance
- ATS costs are higher on a unit basis for smaller sites that would be expected to have a lower volume of treated runoff
- ATS costs are seasonably variable due to increases or decreases in rainfall volumes

Implementation

Turbidity is difficult to control once fine particles are suspended in stormwater runoff from a construction site. Sedimentation ponds are effective at removing larger particulate matter by gravity settling, but are ineffective at removing smaller particulates such as clay and fine silt. Sediment ponds are typically designed to remove sediment no smaller than medium silt (0.02 mm). ATS may be used to reduce the turbidity of stormwater runoff. With an ATS, very high turbidities can be reduced to levels comparable to what is found in streams during dry weather.

Criteria for ATS Product Use

Chemically treated stormwater discharged from construction sites must be non-toxic to aquatic organisms. The following protocol should be used to evaluate chemicals proposed for stormwater treatment at construction sites. Authorization to use a chemical in the field based on this protocol does not relieve the applicant from responsibility for meeting all discharge and receiving water criteria applicable to a site.

- An ATS Plan, which includes an Operation and Maintenance component, a Monitoring, Sampling and Reporting component, a Health and Safety component, and a Spill Prevention component must be prepared and submitted to the Regional Water Quality Control Board (RWQCB).

- Treatment chemicals should be approved by EPA for potable water use or otherwise be demonstrated to be protective of human health and the environment. Chemical residual or whole effluent toxicity testing is required.

- Prior to field use of chemical treatment, jar tests are to be conducted to demonstrate that turbidity reduction necessary to meet the NELs and receiving water criteria can be achieved. Test conditions, including but not limited to raw water quality and jar test procedures, should be indicative of field conditions. Although these small-scale tests cannot be expected to reproduce performance under field conditions, they are indicative of treatment capability. A minimum of six site-specific jar tests must be conducted per chemical.

- The proposed maximum dosage should be at least a factor of five lower than the no observed effects concentration (NOEC).

- Effluent discharge from an ATS to a receiving water is conditional upon the favorable results of full-scale whole effluent bioassay/toxicity testing for batch treatment systems and upon chemical residuals testing for flow-through systems.

- Contact the RWQCB for a list of treatment chemicals that may be pre-approved for use.

Active Treatment System Design Considerations

The design and operation of an ATS should take into consideration the factors that determine optimum, cost-effective performance. While site characteristics will influence system design, it is important to recognize the following overriding considerations:

- The right chemical must be used at the right dosage. A dosage that is either too low or too high will not produce the lowest turbidity. There is an optimum dosage rate. This is a situation where the adage “adding more is always better” is not the case.

- The coagulant must be mixed rapidly into the water to insure proper dispersion.

- The mixing system for batch treatment must be sized to provide adequate mixing for the design storage volume. Lack of adequate mixing during the flocculation phase results in flocs that are too small and/or insufficiently dense. Too much mixing can rapidly destroy floc as it is formed.

- Care must be taken in the design of the withdrawal system to minimize outflow velocities and to prevent floc discharge. The discharge should be directed through a filtration system such as sand, bag, or cartridge filter that would catch any unintended floc discharge.

- ATS is also regulated for pH of the discharge. A pH-adjusting chemical should be added into the treated water to control pH if the selected coagulant requires alteration of the pH of the discharge outside of the acceptable range.

Active Treatment System Design

ATS can be designed as batch treatment systems using either ponds or portable trailer-mounted tanks, or as flow-through systems using any number of proprietary designed systems.

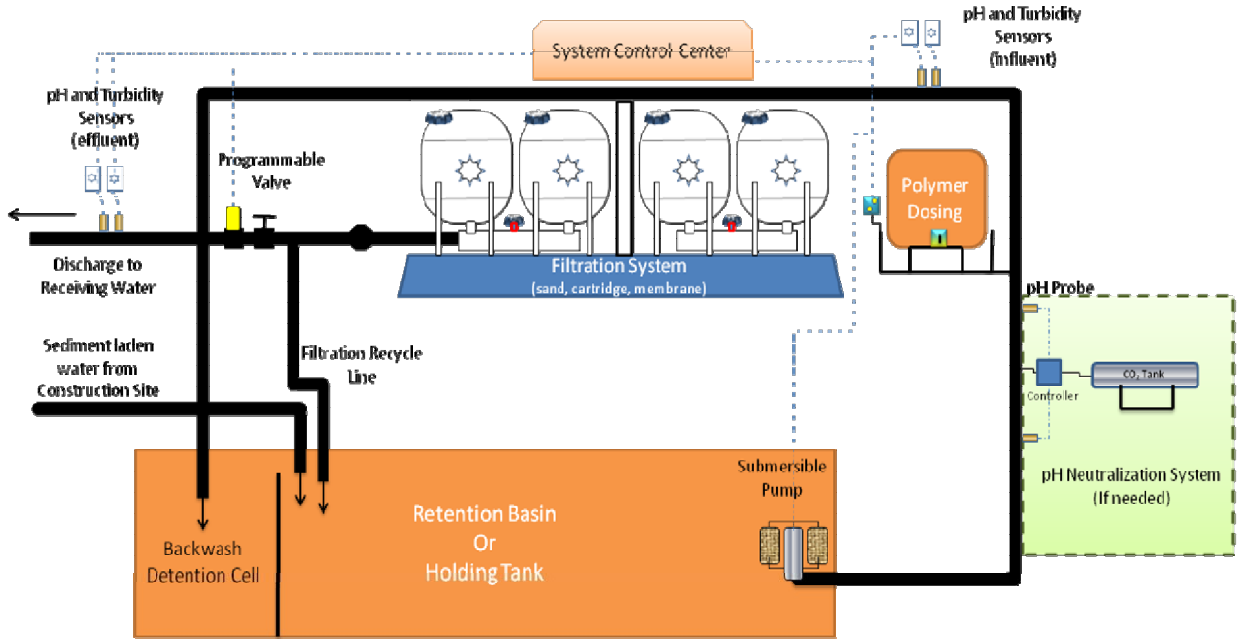

Figure has been adapted from Port of Seattle response to Washington Dept. of Ecology Action Order 2948

Batch Treatment

Batch Treatment systems consist of the stormwater collection system (either temporary diversion or the permanent site drainage system); a sediment basin, trap or holding tanks; pumps; a chemical feed system; treatment cells; and, interconnecting piping.

Batch treatment systems should use a minimum of two lined treatment cells. Multiple treatment cells allow for clarification of treated water while other cells are being filled or emptied. Treatment cells may be basins, traps, or tanks. Portable tanks may also be suitable for some sites.

The following equipment should be located in a secured, covered location:

- The chemical injector
- Secondary contaminant for acid, caustic, buffering compound, and treatment chemical
- Emergency shower and eyewash
- Monitoring equipment which consists of a pH meter and a turbidimeter (if not already within the instrumentation panel of the chemical injector)

Flow-through Treatment

At a minimum, a flow-through ATS system consists of the stormwater collection system (either temporary diversion or the permanent site drainage system), an untreated stormwater storage pond or holding tank, and a chemically enhanced filtration system.

Stormwater is collected at interception point(s) on the site and is diverted by gravity or by pumping to an untreated stormwater storage pond or other untreated stormwater holding area.

The stormwater is stored until treatment occurs. It is important that the holding pond be large enough to provide adequate storage.

Stormwater is then pumped from the untreated stormwater storage pond to the chemically enhanced filtration system where polymer is added. Adjustments to pH may be necessary before chemical addition. The filtration system continually monitors the stormwater for turbidity and pH. If the discharge water is out of the acceptable turbidity or pH range, the water is recycled to the untreated stormwater pond (or holding tank) where it can be retreated. Flow through systems must ensure that:

- Cumulative flow volume shall be recorded daily. The data recording system shall have the capacity to record a minimum of seven days of continuous data.
- Instrumentation systems are interfaced with system control to provide auto shutoff or recirculation in the event that effluent measurements exceed turbidity or pH.
- Upon system upset, power failure, or other catastrophic event, the ATS will default to a recirculation mode or safe shut down.
- The instrumentation system provides a method for controlling coagulant dose, to prevent potential overdosing.

Sizing Criteria

An ATS shall be designed and approved by a Certified Professional in Erosion and Sediment Control (CPESC), a Certified Professional in Storm Water Quality (CPSWQ); a California registered civil engineer; or any other California registered engineer.

ATS must be designed to capture and treat (within 72 hours) runoff from the 10-year 24-hour storm event. The runoff volume of the watershed area to be treated from this size storm event is required to be calculated using the Rational Method with a runoff coefficient of 1.

If sediment basins are used to capture flow-through or batch treatment, see SE-2, Sediment Basin, for design criteria. Bypass should be provided around the ATS to accommodate extreme storm events. Primary settling should be encouraged in the sediment basin/storage pond. A forebay with access for maintenance may be beneficial.

The permissible discharge rate governed by potential downstream effect should be used to calculate the recommended size of the treatment cells. Local requirements related to Phase I or Phase II NPDES permit thresholds should be considered in developing maximum discharge rates the ATS Plan.

Costs

Costs for ATS may be significant due to equipment rental requirements and cost of chemicals. ATS cost is lower on a treated unit-basis for large construction sites with large volumes of runoff.

Inspection and Maintenance

ATS must be operated and maintained by individuals with experience in their use and trained in accordance with training requirements below. ATS should be monitored continuously while in

use. A designated responsible person shall be on site daily at all times during treatment operations. Daily on-site visual monitoring of the system for proper performance shall be conducted and recorded in the project data log. The name, phone number, and training documentation of the person responsible for system operation and monitoring shall be included in the project data log.

The following monitoring requirements and results should be recorded in the data log:

Operational and Compliance Monitoring

- Effluent flow rate and volume shall be continuously monitored and recorded at 15- minute or less intervals.
- Influent and effluent pH must be continuously monitored and recorded at 15-minute or less intervals.
- Influent and effluent turbidity (expressed in NTU) must be continuously monitored and recorded at 15-minute or less intervals.
- The type and amount of chemical used for pH adjustment, if any, shall be monitored and recorded.
- Dose rate of chemical used in the ATS system (expressed in mg/L) shall be monitored and reported 15-minutes after startup and every 8 hours of operation.
- Laboratory duplicates – monthly laboratory duplicates for residual coagulant analysis must be performed and records shall be maintained onsite.
- Effluent shall be monitored and recorded for residual chemical/additive levels.
- If a residual chemical/additive test does not exist and the ATS is operating in a batch treatment mode of operation refer to the toxicity monitoring requirements below.

Toxicity Monitoring

Batch Treatment

Toxicity testing for systems operated in batch treatment mode should be made in accordance with the following:

- Acute toxicity testing on effluent samples representing effluent from each batch prior to discharge shall be undertaken. All bioassays shall be sent to a laboratory certified by the Department of Health Services (DHS) Environmental Laboratory Accreditation Program (ELAP). The required field of testing number for Whole Effluent Toxicity (WET) testing is E113.
- Acute toxicity tests shall be conducted with the following species and protocols. The methods to be used in the acute toxicity testing shall be those outlined for a 96-hour acute test in "Methods for Measuring the Acute Toxicity of Effluents and Receiving Water to Freshwater and Marine Organisms, USEPA-841-R-02-012" for Fathead minnow, *Pimephales promelas*. Rainbow trout, *Oncorhynchus mykiss,* may be used as a substitute for fathead minnow.

All toxicity tests shall meet quality assurance criteria and test acceptability criteria in the most recent versions of the EPA test method for WET testing.

Flow-through Treatment

Toxicity testing for systems operated in flow-through treatment mode should be made in accordance with the following:

- A residual chemical test method shall be used that has a method detection limit (MDL) of 10% or less than the maximum allowable threshold concentration (MATC) for the specific coagulant in use and for the most sensitive species of the chemical used. The MATC is equal to the geometric mean of the No Observed Effect Concentration (NOEC) and Lowest Observed Effect Concentration (LOEC) Acute and Chronic toxicity results for most sensitive species determined for the specific coagulant.
- The residual chemical test method shall produce a result within one hour of sampling.
- A California State certified laboratory shall validate the selected residual chemical test. Specifically the lab will review the test protocol, test parameters, and the detection limit of the coagulant. The discharger shall electronically submit this documentation as part of the ATS Plan.

Numeric Effluent Limit (NEL) Compliance:

All chemically treated stormwater must be sampled and tested for compliance with pH and turbidity limits. These limits have been established by the Construction General Permit. Sampling and testing for other pollutants may also be necessary at some sites. Turbidity limits have been set as 10 NTU as a daily flow-weighted average or 20 NTU from a single sample. pH must be within the range of 6.0 to 9.0 standard units. It is often possible to discharge treated stormwater that has a lower turbidity than the receiving water and that matches the pH.

Treated stormwater samples and measurements should be taken from the discharge pipe or another location representative of the nature of the treated stormwater discharge. Samples used for determining compliance with the water quality standards in the receiving water should not be taken from the treatment pond prior to decanting. Compliance with the water quality standards is determined in the receiving water.

Operator Training:

Operators shall have training specific to using an ATS and liquid coagulants for stormwater discharges in California. The training shall be in the form of a formal class with a certificate and requirements for testing and certificate renewal. Training shall include a minimum of eight hours classroom and 32 hours field training.

Standard BMPs:

Erosion and sediment control BMPs should be implemented throughout the site to prevent erosion and discharge of sediment to the ATS. Some types of chemical coagulation and flocculation are only achievable in water below a certain turbidity; therefore minimizing the amount of sediment reaching the system will increase the likelihood of meeting effluent limits and will potentially lower costs of chemical dosing.

Sediment Removal and Disposal

- Sediment shall be removed from the storage or treatment cells as necessary to ensure that the cells maintain their required water storage (i.e., volume) capability.
- Handling and disposal of all solids generated during ATS operations shall be done in accordance with all local, state, and federal laws and regulations.
- If sediment is determined to be non-toxic, it may be incorporated into the site away from drainages.

References

Engineering and Design – Precipitation/Coagulation/Flocculation. United States Army Corps of Engineers, EM 1110-1-4012, 2001.

Evaluation of Active Treatment Systems (ATS) for Construction Site Runoff. California Building and Industry Association (prepared by Geosyntec Consultants), 2008.

Stormwater Management Manual for Western Washington, Volume II – Construction Stormwater Pollution Prevention, Washington State Department of Ecology, August 2001.

Stormwater Quality Handbooks - Construction Site Best Management Practices (BMPs) Manual, State of California Department of Transportation (Caltrans), November 2000.

Temporary Silt Dike SE-12

Categories

EC	Erosion Control	☒
SE	Sediment Control	☑
TC	Tracking Control	
WE	Wind Erosion Control	
NS	Non-Stormwater Management Control	
WM	Waste Management and Materials Pollution Control	

Legend:

☑ **Primary Category**

☒ **Secondary Category**

Description and Purpose

Temporary silt dikes are pre-manufactured devices that are typically specified and installed for semi-permanent drainage and sediment control on the perimeter of disturbed sites or stockpiles and as check dams within channels.

Suitable Applications

Temporary silt dikes are generally used in areas as a substitute for fiber rolls and silt fences to slow down runoff water, divert drainage or contain fines and sediment. A temporary silt dike typically consists of a triangular foam or recycled rubber core covered in geotextile fabric. Temporary silt dikes are a linear control and have a variety of profiles (triangular, round, and square). Temporary silt dikes may be suitable for:

- On paved surfaces for perimeter protection.
- As check structures in channels.
- Along the perimeter of disturbed sites in lieu of silt fence.
- At operational storm drains as a form of inlet protection.
- Around temporary stockpiles or material/equipment storage areas.
- At the interface between graveled driveways and pavement.
- Along the toe of exposed and erodible slopes.

Targeted Constituents

Sediment	☑
Nutrients	
Trash	☒
Metals	
Bacteria	
Oil and Grease	
Organics	

Potential Alternatives

SE-1 Silt Fence

SE-5 Fiber Roll

SE-6 Gravel Bag Berm

SE-8 Sandbag Barrier

Limitations

- Temporary silt dikes require additional measures to adhere to asphalt in cold and windy climates, as glue may not adhere adequately to the pavement.
- Temporary silt dikes may not be appropriate for drainage areas greater than 5 acres.
- Runoff will pond upstream of the barrier, possibly causing flooding or bypass if sufficient space does not exist to accommodate ponding.
- Temporary silt dikes may require frequent maintenance especially when used near vehicle traffic or to detain concentrated flows (e.g. check dams or inlet protection).
- When used to detain concentrated flows, maintenance requirements increase.

Implementation

General

When appropriately placed, temporary silt dikes intercept and slow sheet flow runoff, causing temporary ponding. The temporary ponding provides quiescent conditions allowing sediment to settle. The core is porous, which allows the ponded runoff to flow slowly through the silt dike, releasing the runoff as sheet flows. Generally, temporary silt dikes should be used in conjunction with temporary soil stabilization controls up slope to provide effective erosion and sediment control or as a non-stormwater perimeter control.

Design and Layout

- Temporary silt dikes used on soil should be attached to the ground per manufacturer specifications.
- Temporary silt dikes used on asphalt or concrete may be attached using a variety of methods, including nailing the dikes to the pavement, or using a high strength adhesive.
- Follow manufacturer specifications when installing temporary silt dikes.
- Allow sufficient space up slope from the silt dikes to allow ponding, and to provide room for sediment storage.
- For installation near the toe of the slope, temporary silt dike should be set back three feet from the slope toe to facilitate cleaning. Where site conditions do not allow set back, the silt dike may be constructed on the toe of the slope. To prevent flows behind the barrier, bags can be placed perpendicular to a berm to serve as cross barriers.
- Drainage area should not exceed 5 acres.
- Butt ends of temporary silt dike tightly. Overlaps should be sealed in accordance with the manufacturer's detail.

Materials

- Several manufactured products are available.

Costs

- Silt dike averages $35-45 per 7 ft. section.

Inspection and Maintenance

- BMPs must be inspected in accordance with General Permit requirements for the associated project type and risk level. It is recommended that at a minimum, BMPs be inspected weekly, prior to forecasted rain events, daily during extended rain events, and after the conclusion of rain events.
- Temporary silt dike exposed to sunlight will need to be replaced more frequently due to photo-degradation.
- Reshape or replace sections of damaged temporary silt dike as needed.
- Repair washouts or other damage as needed.
- Sediment that accumulates behind the BMP should be periodically removed in order to maintain BMP effectiveness. Sediment should be removed when the sediment accumulation reaches one-third of the barrier height.
- Remove temporary silt dikes when no longer needed. Remove sediment accumulation and clean, re-grade, and stabilize the area. Removed sediment should be incorporated in the project or disposed of properly.

References

Stormwater Quality Handbooks - Construction Site Best Management Practices (BMPs) Manual, State of California Department of Transportation (Caltrans), March 2003.

Erosion and Sediment Control Manual, Oregon Department of Environmental Quality, February 2005.

Compost Socks and Berms SE-13

Categories

EC	Erosion Control	☒
SE	Sediment Control	☑
TC	Tracking Control	
WE	Wind Erosion Control	
NS	Non-Stormwater Management Control	
WM	Waste Management and Materials Pollution Control	

Legend:

☑ **Primary Category**

☒ **Secondary Category**

Targeted Constituents

Sediment	☑
Nutrients	
Trash	
Metals	☒
Bacteria	☒
Oil and Grease	☒
Organics	

Potential Alternatives

SE-1 Silt Fence

SE-5 Fiber Roll

SE-6 Gravel Bag Berm

SE-8 Sandbag Barrier

SE-14 Biofilter Bags

Description and Purpose

Compost socks and berms act as three-dimensional biodegradable filtering structures to intercept runoff where sheet flow occurs and are generally placed at the site perimeter or at intervals on sloped areas. Compost socks are generally a mesh sock containing compost and a compost berm is a dike of compost, trapezoidal in cross section. When employed to intercept sheet flow, both BMPs are placed perpendicular to the flow of runoff, allowing filtered runoff to pass through the compost and retaining sediment (and potentially other pollutants). A compost sock can be assembled on site by filling a mesh sock (e.g. with a pneumatic blower). The compost berm should be constructed using a backhoe or equivalent and/or a pneumatic delivery (blower) system and should be properly compacted. Compost socks and berms act as filters, reduce runoff velocities, and in some cases, aid in establishing vegetation.

Compost is organic, biodegradable, and renewable. Compost provides soil structure that allows water to infiltrate the compost medium which helps prevent rill erosion and the retained moisture promotes seed germination and vegetation growth, in addition to providing organic matter and nutrients important for fostering vegetation. Compost improves soil quality and productivity, as well as erosion and sediment control. The compost of the compost sock or berm can be selected that targets site specific objectives in capturing sediment and other pollutants, supporting vegetation, or additional erosion control.

Compost is typically derived from combinations of feedstocks, biosolids, leaf and yard trimmings, manure, wood, or mixed solid waste. Many types of compost are products of municipal recycle or "Greenwaste" programs. Compost is organic and biodegradable and can be left onsite. There are many types of compost with a variety of properties with specific functions, and accordingly compost selection is an important design consideration in the application of this type of erosion and sediment control.

Suitable Applications

- Along the toe, top, face, and at grade breaks of exposed and erodible slopes to shorten slope length and spread runoff as sheet flow (compost berms should only be used at the top of slopes or on slopes 4:1 (H:V) or flatter, all other slope applications should use compost socks)
- Along the perimeter of a project
- As check dams in unlined ditches (compost socks only)
- Down-slope of exposed soil areas
- At operational storm drains as a form of inlet protection (compost socks only)
- Around temporary stockpiles

Compost socks and berms do not require special trenching or BMP removal compared to other sediment control methods (e.g. silt fence or fiber rolls). Compost socks and berms can remain in place after earth disturbing activities are completed or the compost components can be spread over the site providing nutrients for plant growth and augmenting soil structure. BMPs that remain in place are particularly advantageous below embankments, especially adjacent streams, by limiting re-entry and the disturbance to sensitive areas.

Compost can be pre-seeded prior to application (recommended by the EPA for construction site stormwater runoff control and required for compost socks) or seeded after installation (for compost berms only). The compost medium can also remove pollutants in stormwater including heavy metals; oil and grease; and hydrocarbons.

Limitations

- Compost can potentially leach nutrients (dissolved phosphorus and nitrogen) into runoff and potentially impact water quality. Compost should not be used directly upstream from nutrient impaired waterbodies (Adams et. al, 2008).
- Compost may also contain other undesirable constituents that are detrimental to water quality. Compost should be obtained from a supplier certified by the California Integrated Waste Management Board or compost should otherwise meet the environmental health standards of Title 14, California Code of Regulations, Division 7, Chapter 3.1, Article 7. Carefully consider the qualifications and experience of any compost producer/supplier.
- Application by hand is more time intensive and potentially costly. Using a pneumatic blower truck is the recommended cost effective method of assembly.
- Compost socks and berms should not be employed at the base of slopes greater than 2:1 (H:V). They can be employed with other erosion control methods for steeper slopes.

- Difficult to move once saturated.
- Compost berms should not be applied in areas of concentrated flows.
- Compost socks and berms are easy to fix; however, they are susceptible to damage by frequent traffic. Compost socks can be used around heavy machinery, but regular disturbance decreases sock performance.

Implementation

Compost Materials

- California Compost Regulations (Title 14, California Code of Regulations, Division 7, Chapter 3.1, Article 7, Section 17868.3) define and require a quality of compost for application. Compost should comply with all physical and chemical requirements. Specific requirements are provided in Table 1, taken from Caltrans Standard Special Provision 10-1 (SSP 10-1), Erosion Control (Compost Blanket).
- The compost producer should be fully permitted as specified under the California Integrated Waste Management Board, Local Enforcement Agencies and any other State and Local Agencies that regulate Solid Waste Facilities. If exempt from State permitting requirements, the composting facility should certify that it follows guidelines and procedures for production of compost meeting the environmental health standards of Title 14, California Code of Regulations, Division 7, Chapter 3.1, Article 7.
- The compost producer should be a participant in United States Composting Council's Seal of Testing Assurance program.
- Compost medium parameter specifications for compost socks and berms have been developed to assist in compost selection, such as those provided by the American Association of State Highway Transportation Officials (AASHTO).
- Particle size is important parameter for selecting compost. Well consolidated coarser grades of compost (e.g. small and large pieces) perform better for filtration objectives, while finer grades better support vegetation. Particle size of the compost should be selected based on site conditions, such as expected precipitation, and filtration goals and / or long term plant nutrients.
- Compost moisture should be considered for composition quality and application purposes. A range of 30-50% is typical. Compost that is too dry is hard to apply and compost that is too wet is more difficult (and more expensive) to transport. For arid or semi-arid areas, or for application during the dry season, use compost with greater moisture content than areas with wetter climates. For wetter or more humid climates or for application during the wet season, drier composts can be used as the compost will absorb moisture from the ambient air.
- If vegetation establishment is a desired function of the compost, a compost sample should be inspected by a qualified individual. Vegetation has different nutrient and moisture needs.
- Organic content of the compost is also important and should range from 30 to 65% depending on site conditions.

- Compost should not be derived from mixed municipal solid waste and should be reasonably free of visible contaminates.
- Compost should not contain paint, petroleum products, pesticides or any other chemical residues harmful to animal life or plant growth. Metal concentrations in compost should not exceed the maximum metal concentrations listed under Title 14, California Code of Regulations, Division 7, Chapter 3.1, Section 17868.2.
- Compost should not possess objectionable odors.
- Compost should be weed free.

Table 1. Physical/Chemical Requirements of Compost
Reference - Caltrans SSP-10 Erosion Control Blanket (Compost)

Property	Test Method	Requirement
pH	*TMECC 04.11-A Elastometric pH 1:5 Slurry Method pH Units	6.0–8.0
Soluble Salts	TMECC 04.10-A Electrical Conductivity 1:5 Slurry Method dS/m (mmhos/cm)	0-10.0
Moisture Content	TMECC 03.09-A Total Solids & Moisture at 70+/- 5 deg C % Wet Weight Basis	30-60
Organic Matter Content	TMECC 05.07-A Loss-On-Ignition Organic Matter Method (LOI) % Dry Weight Basis	30–65
Maturity	TMECC 05.05-A Germination and Vigor Seed Emergence Seedling Vigor % Relative to Positive Control	80 or Above 80 or Above
Stability	TMECC 05.08-B Carbon Dioxide Evolution Rate mg CO_2-C/g OM per day	8 or below
Particle Size	TMECC 02.02-B Sample Sieving for Aggregate Size Classification % Dry Weight Basis	100% Passing, 3 inch 90-100% Passing, 1 inch 65-100% Passing, 3/4 inch 0 - 75% Passing, 1/4 inch Maximum length 6 inches
Pathogen	TMECC 07.01-B Fecal Coliform Bacteria < 1000 MPN/gram dry wt.	Pass
Pathogen	TMECC 07.01-B Salmonella < 3 MPN/4 grams dry wt.	Pass
Physical Contaminants	TMECC 02.02-C Man Made Inert Removal and Classification: Plastic, Glass and Metal % > 4mm fraction	Combined Total: < 1.0
Physical Contaminants	TMECC 02.02-C Man Made Inert Removal and Classification: Sharps (Sewing needles, straight pins and hypodermic needles) % > 4mm fraction	None Detected

*TMECC refers to "Test Methods for the Examination of Composting and Compost," published by the United States Department of Agriculture and the United States Compost Council (USCC).

Installation

- Prior to application, prepare locations for socks and berms by removing brush and thick vegetation. The compost of the sock and/or berm should be allowed to come in full contact with the ground surface.

- Select method to apply the compost sock or berm. A pneumatic blower is most cost effective and most adaptive in applying compost to steep, rough terrain, and hard to reach locations.

- The compost of the berm should be distributed evenly to the surface, compacted, and shaped trapezoidal in cross section. Berm design is generally consists of a base two times the height. AASHTO specification MP 9-03 provides compost berm dimensions based on anticipated site precipitation (AASHTO, 2003 and USEPA, 2009). State agencies, such as Oregon

Department of Environmental Quality (ODEQ) have developed berm dimension based on slope steepness and length (ODEQ, 2004).

- Compost socks can be assembled on site by filling mesh socks with the selected compost. Mesh socks can be tied at one end, filled, and then tied at the other end. The ends of socks can be interlocked until the desired length is achieved. The sock diameter is a function of slope steepness and length. Again, ASSHTO provides specifications for various parameters. Compost socks range from 8" to 18", but are typically 12" to 18" in diameter.
- Compost socks are typically placed in contours perpendicular to sheet flow. They can also be placed in V formation on a slope. Compost socks need to be anchored, typically stakes, through the center of the sock. To prevent water flowing around them, the ends of compost socks should be placed upslope.
- Locate compost socks and berms on level contours spaced as follows:
  - Slope inclination of 4:1 (H:V) or flatter: Socks and/or berms should be placed at a maximum interval of 20 ft.
  - Slope inclination between 4:1 and 2:1 (H:V): Socks should be placed at a maximum interval of 15 ft. (a closer spacing is more effective).
  - Slope inclination 2:1 (H:V) or greater: Socks should be placed at a maximum interval of 10 ft. (a closer spacing is more effective).
- Place perimeter socks and berms using a j-hook installation. Use of vegetation will also provide additional anchoring.
- Compost socks and berms can be placed around the perimeter of an affected area, like a silt fence, if the area is flat or on a contour. Do not place these socks and berms where ponded water could become an issue.
- If used at the toe of slopes, the compost sock or berm should at a minimum of 5 to 10 feet away.
- Use additional anchoring and erosion control BMPS in conjunction of the compost socks and berms as needed.
- Consider using compost berms or socks as necessary at the top and/or bottom of the slope for additional erosion control performance.
- Compost socks and berms can also be effective over rocky and frozen ground if installed properly.
- It is recommended that the drainage areas of these compost BMPs do not exceed 0.25 acre per 100 feet placement interval and runoff does not exceed 1 cubic foot per second.

Costs

Recently obtained vendor costs indicated $3.50 per linear foot for compost berm application and $2.00 per linear foot for 8" socks and $2.50 per linear foot for 12"socks. Costs do not include final compost sock or berm functions at the end of construction activities, including spreading or removal, if required. ODEQ estimates that compost berms cost 30 percent less than silt fences to install.

Inspection and Maintenance

- BMPs must be inspected in accordance with General Permit requirements for the associated project type and risk level. It is recommended that at a minimum, BMPs be inspected weekly, prior to forecasted rain events, daily during extended rain events, and after the conclusion of rain events.
- Once damage is identified, mend or reapply the sock or berm as needed. Washed out areas should be replaced. If the sock or berm height is breached during a storm, an additional sock can be stacked to increase the sock height and similarly the berm dimensions can be increased, as applicable. An additional sock or berm may be installed upslope, as needed. It may be necessary to apply an additional type of stormwater BMP, such as a compost blanket.
- Sediment contained by the sock or berm should be removed prior reaching 1/3 of the exposed height of the BMP. The sediment can be stabilized with the compost sock or berm with vegetation at the end of construction activities.
- Care should be exercised to minimize the damage to protected areas while making repairs, as any area damaged will require reapplication of BMPs.
- Limit traffic to minimize damage to BMPs or impede vegetation establishment.

References

An analysis of Composting as an Environmental Remediation Technology, U.S. Environmental Protection Agency (USEPA), Solid Waste and Emergency Response (5305W), EPA530-R-8-008, 1998.

Characteristics of Compost: Moisture Holding and Water Quality Improvement, Center for Research in Water Resources, Kirchoff, C., Malina, J., and Barrett, M., 2003.

Compost Utilization for Erosion Control, The University of Georgia College of Agricultural and Environmental Sciences, pubs.caes.uga.edu/caespubs/pubcd/B1200.htm, Faucette, B. and Risse, M., 2001.

Erosion and Sediment Control Manual, Oregon Department of Environmental Quality, February 2005.

Standard Special Provision 10-1, Erosion Control (Compost Blanket), State of California Department of Transportation (Caltrans). 2007 Update.

Evaluation of Environmental Benefits and Impacts of Compost and Industry Standard Erosion and Sediment Controls Measures Used in Construction Activities, Dissertation, Institute of Ecology, University of Georgia, Faucette, B., 2004.

National Pollutant Discharge Elimination System (NPDES), Compost Blankets, U.S. Environmental Protection Agency (USEPA). http://cfpub.epa.gov/npdes/stormwater/menuofbmps/index.cfm?action=factsheet_results&view=specific&bmp=118, 2009.

Standard Specifications for Transportation Materials and Methods of Sampling and Testing, Designation MP-9, Compost for Erosion/Sediment Control (Filter Berms), Provisional, American Association of State Highway Transportation Officials (AASHTO), 2003.

Stormwater Best Management Practices (BMPs) Field Trials of Erosion Control Compost in Reclamation of Rock Quarry Operations, Nonpoint Source Protection Program CWA §319(h), Texas Commission on Environmental Quality, Adams, T., McFarland, A., Hauck, L., Barrett, M., and Eck, B., 2008.

Biofilter Bags SE-14

Categories

EC	Erosion Control	
SE	Sediment Control	☑
TR	Tracking Control	
WE	Wind Erosion Control	
NS	Non-Stormwater Management Control	
WM	Waste Management and Materials Pollution Control	

Legend:

☑ **Primary Category**

☒ **Secondary Category**

Targeted Constituents

Sediment	☑
Nutrients	
Trash	
Metals	
Bacteria	
Oil and Grease	
Organics	

Potential Alternatives

SE-1 Silt Fence

SE-4 Check Dams

SE-5 Fiber Roll

SE-6 Gravel Bag Berm

SE-8 Sandbag Barrier

SE-10 Storm Drain Inlet Protection

Description and Purpose

Biofilter bags, or bio-bags, are a multi-purpose sediment control BMP consisting of a plastic mesh bag filled with 100% recycled wood product waste. Biofilter bags come in a variety of sizes (30" X 18" and 30" X 9" being common) and generally have between 1-2 cubic yards of recycled wood waste (or wood chips). Biofilter bags work by detaining flow and allowing a slow rate of discharge through the wood media. This action removes suspended sediment through gravity settling of the detained water and filtration within the bag.

Suitable Applications

Biofilter bags are a short-term BMP that can be rapidly deployed, maintained, and replaced. Biofilter bags can be an effective short-term solution to place in developed rills to prevent further erosion until permanent measures can be established. Suitable short-term applications include:

- As a linear sediment control measure:
  - Below the toe of slopes and erodible slopes
  - Below other small cleared areas
  - Along the perimeter of a site (with low-expected flow)
  - Down slope of exposed soil areas
  - Around temporary stockpiles and spoil areas
  - Parallel to a roadway to keep sediment off paved areas

- Along streams and channels

- As linear erosion control measure:
  - Along the face and at grade breaks of exposed and erodible slopes to shorten slope length and spread runoff as sheet flow
  - At the top of slopes to divert runoff away from disturbed slopes
  - As check dams across mildly sloped construction roads
- Inlet Protection (See SE-10)
- Supplement to silt fences or other sediment control devices

Limitations

- Short life-span (2-3 months); regular maintenance and replacement required to ensure effectiveness. Bags will rapidly fill with sediment and reduce permeability.
- Easily damaged by construction vehicles.
- If not properly staked, will fail on slope applications.
- If improperly installed can allow undercutting or side-cutting flow.
- Not effective where water velocities or volumes are high.
- Potentially buoyant and easily displaced if not properly installed.

Implementation

General

Biofilter bags are a relatively low cost temporary BMP that are easily deployed and have a simple installation that can be performed by hand. Without proper installation, however, biofilter bags can fail due to their light weight, potential displacement, and multiple joint locations. One of the benefits of utilizing biofilter bags is that the media (wood-product) can be recycled or used onsite when no longer needed (where acceptable).

Design and Layout – Linear control

- Locate biofilter bags on level contours.
  - Slopes between 20:1 and 4:1 (H:V): Biofilter bags should be placed at a maximum interval of 20 ft, with the first row near the slope toe.
  - Slopes between 4:1 and 2:1 (H:V): Biofilter bags should be placed at a maximum interval of 15 ft, with the first row near the slope toe.
  - Slopes 2:1 (H:V) or steeper: Biofilter bags should be placed at a maximum interval of 10 ft., with the first row placed the slope toe.

- Turn the ends of the biofilter bag barriers up slope to prevent runoff from going around the berm.
- Allow sufficient space up slope from the biofilter bag berm to allow ponding, and to provide room for sediment storage.
- Stake biofilter bags into a 1 to 2 in. deep trench with a width equal to the bag.
  - Drive one stake at each end of the bag.
  - Use wood stakes with a nominal classification of 0.75 by 0.75 in. and minimum length of 24 in.
- Biofilter bags should be overlapped (6 in.), not abutted.

Costs

Pre-filled biofilter bags cost approximately $2.50-$3.50 per bag, dependent upon size.

Inspection and Maintenance

- BMPs must be inspected in accordance with General Permit requirements for the associated project type and risk level. It is recommended that at a minimum, BMPs be inspected weekly, prior to forecasted rain events, daily during extended rain events, and after the conclusion of rain events.
- Biofilter bags exposed to sunlight will need to be replaced every two to three months due to degrading of the bags.
- Reshape or replace biofilter bags as needed.
- Repair washouts or other damage as needed.
- Sediment that is retained by the BMP should be periodically removed in order to maintain BMP effectiveness. Sediment should be removed when the sediment accumulation reaches one-third of the barrier height.
- Remove biofilter bag berms when no longer needed. Remove sediment accumulation and clean, re-grade, and stabilize the area. Biofilter media may be used on-site, if allowed.

References

Catalog of Stormwater Best Management Practices for Idaho Cities and Counties. Volume 2, Section 7, BMP 34 – Biofilter Bags, Idaho Department of Environmental Quality, 2005.

Erosion and Sediment Control Manual, Oregon Department of Environmental Quality, February 2005.

Stormwater Quality Handbooks Construction Site Best Management Practices (BMPs) Manual, State of California Department of Transportation (Caltrans), March 2003.

Wind Erosion Control WE-1

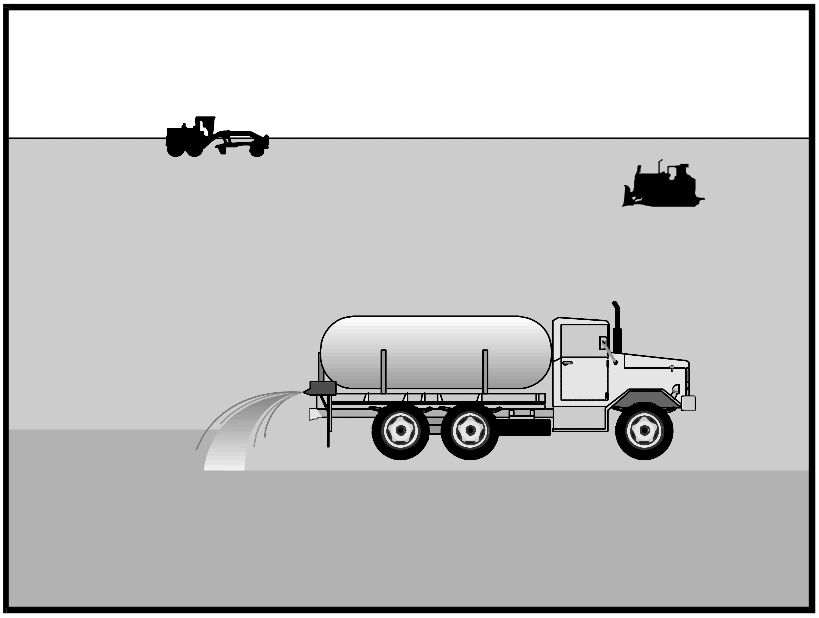

Categories

EC	Erosion Control	
SE	Sediment Control	☒
TC	Tracking Control	
WE	Wind Erosion Control	☑
NS	Non-Stormwater Management Control	
WM	Waste Management and Materials Pollution Control	

Legend:

☑ **Primary Category**

☒ **Secondary Category**

Targeted Constituents

Sediment	☑
Nutrients	
Trash	
Metals	
Bacteria	
Oil and Grease	
Organics	

Potential Alternatives

EC-5 Soil Binders

Description and Purpose

Wind erosion or dust control consists of applying water or other chemical dust suppressants as necessary to prevent or alleviate dust nuisance generated by construction activities. Covering small stockpiles or areas is an alternative to applying water or other dust palliatives.

California's Mediterranean climate, with a short "wet" season and a typically long, hot "dry" season, allows the soils to thoroughly dry out. During the dry season, construction activities are at their peak, and disturbed and exposed areas are increasingly subject to wind erosion, sediment tracking and dust generated by construction equipment. Site conditions and climate can make dust control more of an erosion problem than water based erosion. Additionally, many local agencies, including Air Quality Management Districts, require dust control and/or dust control permits in order to comply with local nuisance laws, opacity laws (visibility impairment) and the requirements of the Clean Air Act. Wind erosion control is required to be implemented at all construction sites greater than 1 acre by the General Permit.

Suitable Applications

Most BMPs that provide protection against water-based erosion will also protect against wind-based erosion and dust control requirements required by other agencies will generally meet wind erosion control requirements for water quality protection. Wind erosion control BMPs are suitable during the following construction activities:

- Construction vehicle traffic on unpaved roads
- Drilling and blasting activities
- Soils and debris storage piles
- Batch drop from front-end loaders
- Areas with unstabilized soil
- Final grading/site stabilization

Limitations

- Watering prevents dust only for a short period (generally less than a few hours) and should be applied daily (or more often) to be effective.
- Over watering may cause erosion and track-out.
- Oil or oil-treated subgrade should not be used for dust control because the oil may migrate into drainageways and/or seep into the soil.
- Chemical dust suppression agents may have potential environmental impacts. Selected chemical dust control agents should be environmentally benign.
- Effectiveness of controls depends on soil, temperature, humidity, wind velocity and traffic.
- Chemical dust suppression agents should not be used within 100 feet of wetlands or water bodies.
- Chemically treated subgrades may make the soil water repellant, interfering with long-term infiltration and the vegetation/re-vegetation of the site. Some chemical dust suppressants may be subject to freezing and may contain solvents and should be handled properly.
- In compacted areas, watering and other liquid dust control measures may wash sediment or other constituents into the drainage system.
- If the soil surface has minimal natural moisture, the affected area may need to be pre-wetted so that chemical dust control agents can uniformly penetrate the soil surface.

Implementation

Dust Control Practices

Dust control BMPs generally stabilize exposed surfaces and minimize activities that suspend or track dust particles. The following table presents dust control practices that can be applied to varying site conditions that could potentially cause dust. For heavily traveled and disturbed areas, wet suppression (watering), chemical dust suppression, gravel asphalt surfacing, temporary gravel construction entrances, equipment wash-out areas, and haul truck covers can be employed as dust control applications. Permanent or temporary vegetation and mulching can be employed for areas of occasional or no construction traffic. Preventive measures include minimizing surface areas to be disturbed, limiting onsite vehicle traffic to 15 mph or less, and controlling the number and activity of vehicles on a site at any given time.

Chemical dust suppressants include: mulch and fiber based dust palliatives (e.g. paper mulch with gypsum binder), salts and brines (e.g. calcium chloride, magnesium chloride), non-petroleum based organics (e.g. vegetable oil, lignosulfonate), petroleum based organics (e.g. asphalt emulsion, dust oils, petroleum resins), synthetic polymers (e.g. polyvinyl acetate, vinyls, acrylic), clay additives (e.g. bentonite, montimorillonite) and electrochemical products (e.g. enzymes, ionic products).

Site Condition	Dust Control Practices							
	Permanent Vegetation	Mulching	Wet Suppression (Watering)	Chemical Dust Suppression	Gravel or Asphalt	Temporary Gravel Construction Entrances/Equipment Wash Down	Synthetic Covers	Minimize Extent of Disturbed Area
Disturbed Areas not Subject to Traffic	X	X	X	X	X			X
Disturbed Areas Subject to Traffic			X	X	X	X		X
Material Stockpiles		X	X	X			X	X
Demolition			X			X	X	
Clearing/ Excavation			X	X				X
Truck Traffic on Unpaved Roads			X	X	X	X	X	
Tracking					X	X		

Additional preventive measures include:

- Schedule construction activities to minimize exposed area (see EC-1, Scheduling).
- Quickly treat exposed soils using water, mulching, chemical dust suppressants, or stone/gravel layering.
- Identify and stabilize key access points prior to commencement of construction.
- Minimize the impact of dust by anticipating the direction of prevailing winds.
- Restrict construction traffic to stabilized roadways within the project site, as practicable.
- Water should be applied by means of pressure-type distributors or pipelines equipped with a spray system or hoses and nozzles that will ensure even distribution.
- All distribution equipment should be equipped with a positive means of shutoff.
- Unless water is applied by means of pipelines, at least one mobile unit should be available at all times to apply water or dust palliative to the project.
- If reclaimed waste water is used, the sources and discharge must meet California Department of Health Services water reclamation criteria and the Regional Water Quality

Control Board (RWQCB) requirements. Non-potable water should not be conveyed in tanks or drain pipes that will be used to convey potable water and there should be no connection between potable and non-potable supplies. Non-potable tanks, pipes, and other conveyances should be marked, "NON-POTABLE WATER - DO NOT DRINK."

- Pave or chemically stabilize access points where unpaved traffic surfaces adjoin paved roads.
- Provide covers for haul trucks transporting materials that contribute to dust.
- Provide for rapid clean up of sediments deposited on paved roads. Furnish stabilized construction road entrances and wheel wash areas.
- Stabilize inactive areas of construction sites using temporary vegetation or chemical stabilization methods.

For chemical stabilization, there are many products available for chemically stabilizing gravel roadways and stockpiles. If chemical stabilization is used, the chemicals should not create any adverse effects on stormwater, plant life, or groundwater and should meet all applicable regulatory requirements.

Costs

Installation costs for water and chemical dust suppression vary based on the method used and the length of effectiveness. Annual costs may be high since some of these measures are effective for only a few hours to a few days.

Inspection and Maintenance

- Inspect and verify that activity-based BMPs are in place prior to the commencement of associated activities.
- BMPs must be inspected in accordance with General Permit requirements for the associated project type and risk level. It is recommended that at a minimum, BMPs be inspected weekly, prior to forecasted rain events, daily during extended rain events, and after the conclusion of rain events.
- Check areas protected to ensure coverage.
- Most water-based dust control measures require frequent application, often daily or even multiple times per day. Obtain vendor or independent information on longevity of chemical dust suppressants.

References

Best Management Practices and Erosion Control Manual for Construction Sites, Flood Control District of Maricopa County, Arizona, September 1992.

California Air Pollution Control Laws, California Air Resources Board, updated annually.

Construction Manual, Chapter 4, Section 10, "Dust Control"; Section 17, "Watering"; and Section 18, "Dust Palliative", California Department of Transportation (Caltrans), July 2001.

Prospects for Attaining the State Ambient Air Quality Standards for Suspended Particulate Matter (PM10), Visibility Reducing Particles, Sulfates, Lead, and Hydrogen Sulfide, California Air Resources Board, April 1991.

Stormwater Quality Handbooks Construction Site Best Management Practices (BMPs) Manual, State of California Department of Transportation (Caltrans), March 2003.

Stabilized Construction Entrance/Exit TC-1

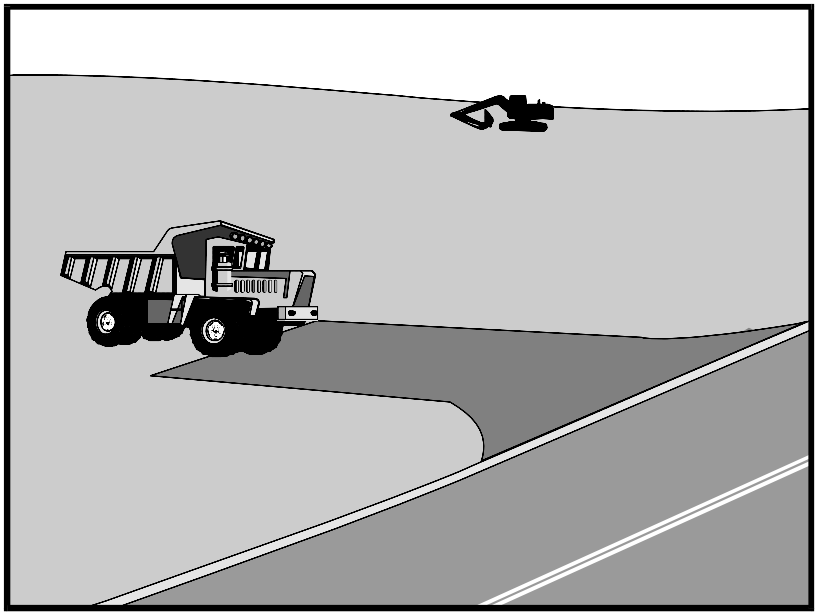

Categories

EC	Erosion Control	☒
SE	Sediment Control	☒
TC	Tracking Control	☑
WE	Wind Erosion Control	
NS	Non-Stormwater Management Control	
WM	Waste Management and Materials Pollution Control	

Legend:

☑ **Primary Objective**

☒ **Secondary Objective**

Targeted Constituents

Sediment	☑
Nutrients	
Trash	
Metals	
Bacteria	
Oil and Grease	
Organics	

Potential Alternatives

None

Description and Purpose

A stabilized construction access is defined by a point of entrance/exit to a construction site that is stabilized to reduce the tracking of mud and dirt onto public roads by construction vehicles.

Suitable Applications

Use at construction sites:

- Where dirt or mud can be tracked onto public roads.
- Adjacent to water bodies.
- Where poor soils are encountered.
- Where dust is a problem during dry weather conditions.

Limitations

- Entrances and exits require periodic top dressing with additional stones.
- This BMP should be used in conjunction with street sweeping on adjacent public right of way.
- Entrances and exits should be constructed on level ground only.
- Stabilized construction entrances are rather expensive to construct and when a wash rack is included, a sediment trap of some kind must also be provided to collect wash water

runoff.

Implementation

General

A stabilized construction entrance is a pad of aggregate underlain with filter cloth located at any point where traffic will be entering or leaving a construction site to or from a public right of way, street, alley, sidewalk, or parking area. The purpose of a stabilized construction entrance is to reduce or eliminate the tracking of sediment onto public rights of way or streets. Reducing tracking of sediments and other pollutants onto paved roads helps prevent deposition of sediments into local storm drains and production of airborne dust.

Where traffic will be entering or leaving the construction site, a stabilized construction entrance should be used. NPDES permits require that appropriate measures be implemented to prevent tracking of sediments onto paved roadways, where a significant source of sediments is derived from mud and dirt carried out from unpaved roads and construction sites.

Stabilized construction entrances are moderately effective in removing sediment from equipment leaving a construction site. The entrance should be built on level ground. Advantages of the Stabilized Construction Entrance/Exit is that it does remove some sediment from equipment and serves to channel construction traffic in and out of the site at specified locations. Efficiency is greatly increased when a washing rack is included as part of a stabilized construction entrance/exit.

Design and Layout

- Construct on level ground where possible.
- Select 3 to 6 in. diameter stones.
- Use minimum depth of stones of 12 in. or as recommended by soils engineer.
- Construct length of 50 ft minimum, and 30 ft minimum width.
- Rumble racks constructed of steel panels with ridges and installed in the stabilized entrance/exit will help remove additional sediment and to keep adjacent streets clean.
- Provide ample turning radii as part of the entrance.
- Limit the points of entrance/exit to the construction site.
- Limit speed of vehicles to control dust.
- Properly grade each construction entrance/exit to prevent runoff from leaving the construction site.
- Route runoff from stabilized entrances/exits through a sediment trapping device before discharge.
- Design stabilized entrance/exit to support heaviest vehicles and equipment that will use it.

- Select construction access stabilization (aggregate, asphaltic concrete, concrete) based on longevity, required performance, and site conditions. Do not use asphalt concrete (AC) grindings for stabilized construction access/roadway.
- If aggregate is selected, place crushed aggregate over geotextile fabric to at least 12 in. depth, or place aggregate to a depth recommended by a geotechnical engineer. A crushed aggregate greater than 3 in. but smaller than 6 in. should be used.
- Designate combination or single purpose entrances and exits to the construction site.
- Require that all employees, subcontractors, and suppliers utilize the stabilized construction access.
- Implement SE-7, Street Sweeping and Vacuuming, as needed.
- All exit locations intended to be used for more than a two-week period should have stabilized construction entrance/exit BMPs.

Inspection and Maintenance

- Inspect and verify that activity–based BMPs are in place prior to the commencement of associated activities. While activities associated with the BMPs are under way, inspect weekly during the rainy season and of two-week intervals in the non-rainy season to verify continued BMP implementation.
- Inspect local roads adjacent to the site daily. Sweep or vacuum to remove visible accumulated sediment.
- Remove aggregate, separate and dispose of sediment if construction entrance/exit is clogged with sediment.
- Keep all temporary roadway ditches clear.
- Check for damage and repair as needed.
- Replace gravel material when surface voids are visible.
- Remove all sediment deposited on paved roadways within 24 hours.
- Remove gravel and filter fabric at completion of construction

Costs

Average annual cost for installation and maintenance may vary from $1,200 to $4,800 each, averaging $2,400 per entrance. Costs will increase with addition of washing rack, and sediment trap. With wash rack, costs range from $1,200 - $6,000 each, averaging $3,600 per entrance.

References

Manual of Standards of Erosion and Sediment Control Measures, Association of Bay Area Governments, May 1995.

National Management Measures to Control Nonpoint Source Pollution from Urban Areas, USEPA Agency, 2002.

Proposed Guidance Specifying Management Measures for Sources of Nonpoint Pollution in Coastal Waters, Work Group Working Paper, USEPA, April 1992.

Stormwater Quality Handbooks Construction Site Best Management Practices (BMPs) Manual, State of California Department of Transportation (Caltrans), November 2000.

Stormwater Management of the Puget Sound Basin, Technical Manual, Publication #91-75, Washington State Department of Ecology, February 1992.

Virginia Erosion and Sedimentation Control Handbook, Virginia Department of Conservation and Recreation, Division of Soil and Water Conservation, 1991.

Guidance Specifying Management Measures for Nonpoint Pollution in Coastal Waters, EPA 840-B-9-002, USEPA, Office of Water, Washington, DC, 1993.

Water Quality Management Plan for the Lake Tahoe Region, Volume II, Handbook of Management Practices, Tahoe Regional Planning Agency, November 1988.

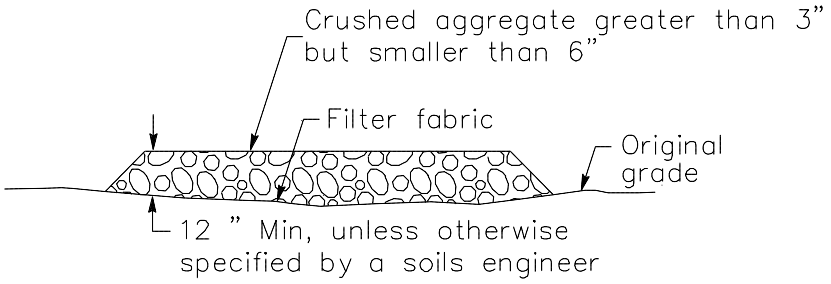

SECTION B–B
NTS

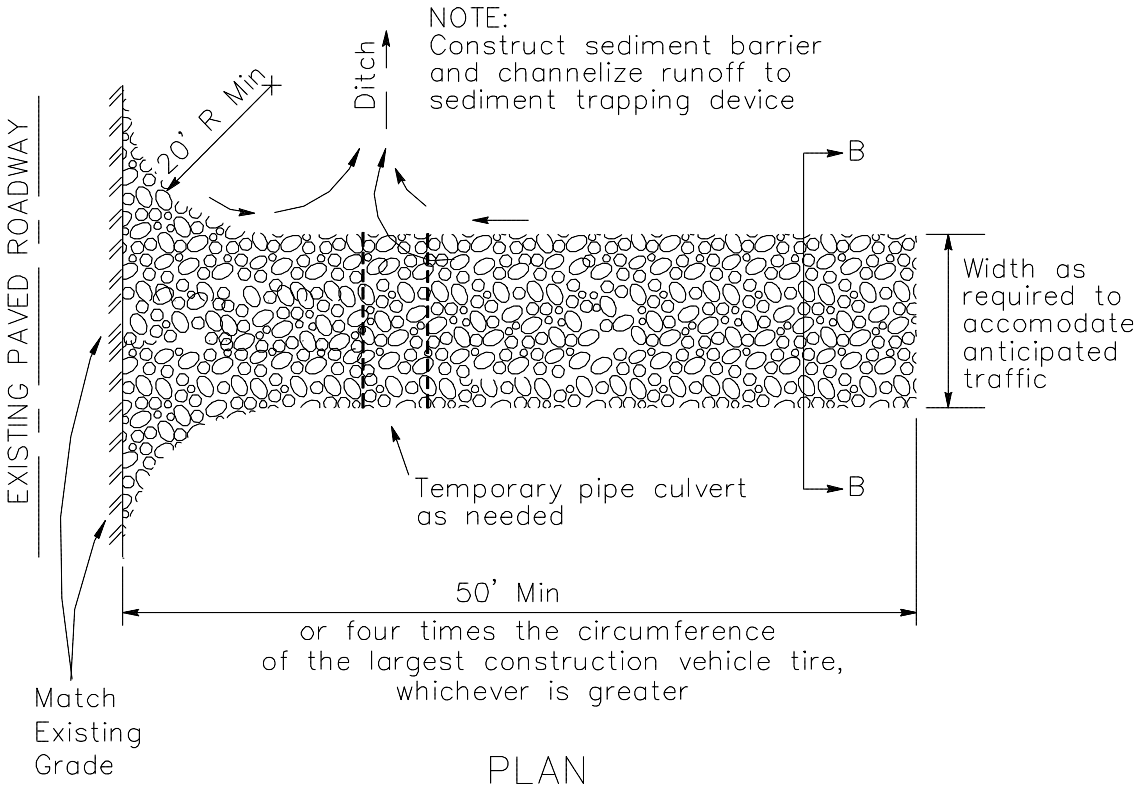

PLAN
NTS

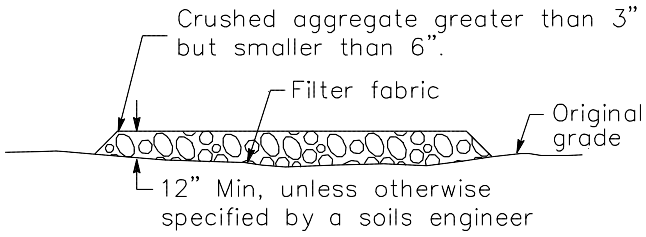

SECTION B–B
NTS

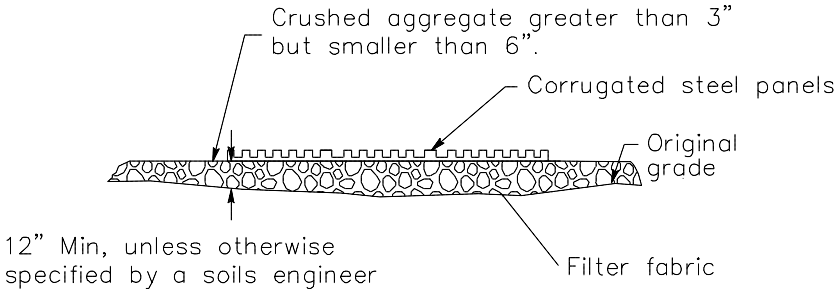

SECTION A–A
NOT TO SCALE

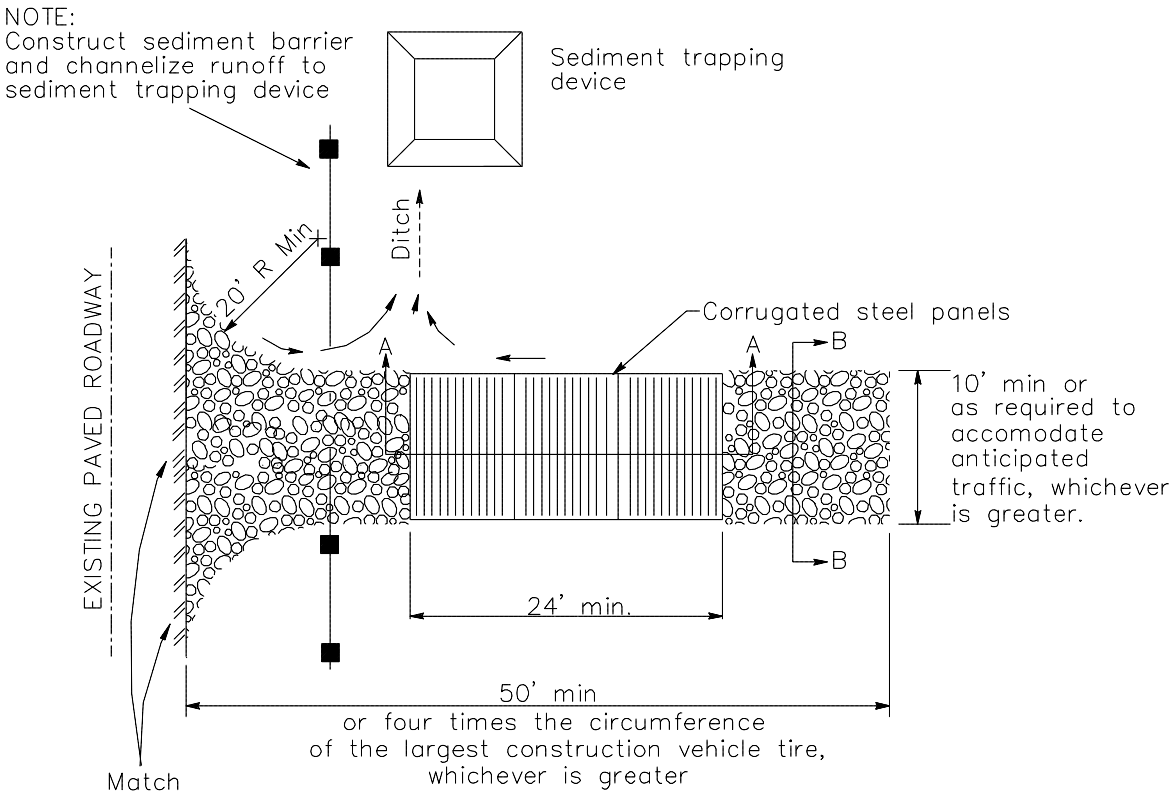

PLAN
NTS

Stabilized Construction Roadway TC-2

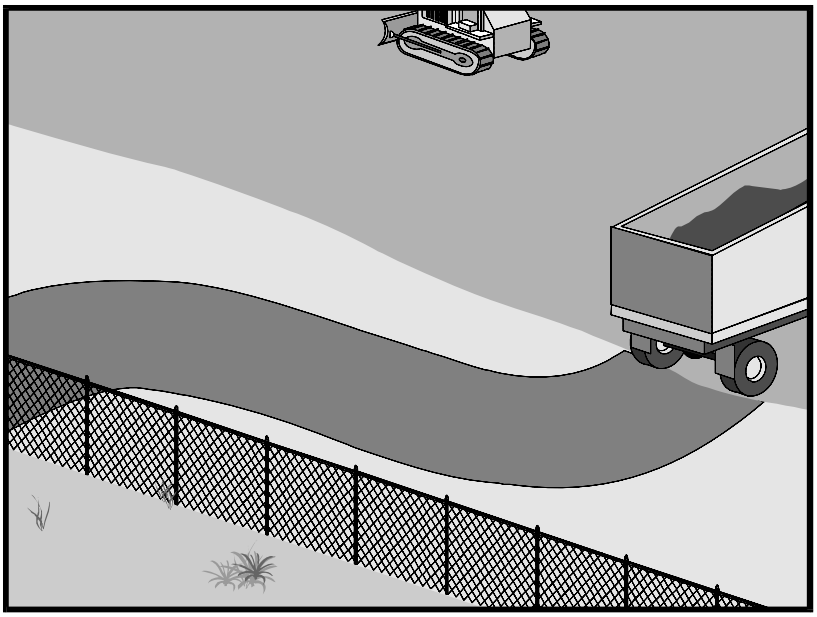

Categories

EC	Erosion Control	☒
SE	Sediment Control	☒
TC	Tracking Control	☑
WE	Wind Erosion Control	
NS	Non-Stormwater Management Control	
WM	Waste Management and Materials Pollution Control	

Legend:

☑ **Primary Objective**

☒ **Secondary Objective**

Targeted Constituents

Sediment	☑
Nutrients	
Trash	
Metals	
Bacteria	
Oil and Grease	
Organics	

Potential Alternatives

None

Description and Purpose

Access roads, subdivision roads, parking areas, and other onsite vehicle transportation routes should be stabilized immediately after grading, and frequently maintained to prevent erosion and control dust.

Suitable Applications

This BMP should be applied for the following conditions:

- Temporary Construction Traffic:
  - Phased construction projects and offsite road access
  - Construction during wet weather
- Construction roadways and detour roads:
  - Where mud tracking is a problem during wet weather
  - Where dust is a problem during dry weather
  - Adjacent to water bodies
  - Where poor soils are encountered

Limitations

- The roadway must be removed or paved when construction is complete.
- Certain chemical stabilization methods may cause stormwater or soil pollution and should not be used. See WE-1, Wind Erosion Control.

- Management of construction traffic is subject to air quality control measures. Contact the local air quality management agency.
- Materials will likely need to be removed prior to final project grading and stabilization.
- Use of this BMP may not be applicable to very short duration projects.

Implementation

General

Areas that are graded for construction vehicle transport and parking purposes are especially susceptible to erosion and dust. The exposed soil surface is continually disturbed, leaving no opportunity for vegetative stabilization. Such areas also tend to collect and transport runoff waters along their surfaces. During wet weather, they often become muddy quagmires that generate significant quantities of sediment that may pollute nearby streams or be transported offsite on the wheels of construction vehicles. Dirt roads can become so unstable during wet weather that they are virtually unusable.

Efficient construction road stabilization not only reduces onsite erosion but also can significantly speed onsite work, avoid instances of immobilized machinery and delivery vehicles, and generally improve site efficiency and working conditions during adverse weather

Installation/Application Criteria

Permanent roads and parking areas should be paved as soon as possible after grading. As an alternative where construction will be phased, the early application of gravel or chemical stabilization may solve potential erosion and stability problems. Temporary gravel roadway should be considered during the rainy season and on slopes greater than 5%.

Temporary roads should follow the contour of the natural terrain to the maximum extent possible. Slope should not exceed 15%. Roadways should be carefully graded to drain transversely. Provide drainage swales on each side of the roadway in the case of a crowned section or one side in the case of a super elevated section. Simple gravel berms without a trench can also be used.

Installed inlets should be protected to prevent sediment laden water from entering the storm sewer system (SE-10, Storm Drain Inlet Protection). In addition, the following criteria should be considered.

- Road should follow topographic contours to reduce erosion of the roadway.
- The roadway slope should not exceed 15%.
- Chemical stabilizers or water are usually required on gravel or dirt roads to prevent dust (WE-1, Wind Erosion Control).
- Properly grade roadway to prevent runoff from leaving the construction site.
- Design stabilized access to support heaviest vehicles and equipment that will use it.

- Stabilize roadway using aggregate, asphalt concrete, or concrete based on longevity, required performance, and site conditions. The use of cold mix asphalt or asphalt concrete (AC) grindings for stabilized construction roadway is not allowed.
- Coordinate materials with those used for stabilized construction entrance/exit points.
- If aggregate is selected, place crushed aggregate over geotextile fabric to at least 12 in. depth. A crushed aggregate greater than 3 in. but smaller than 6 in. should be used.

Inspection and Maintenance

- Inspect and verify that activity–based BMPs are in place prior to the commencement of associated activities. While activities associated with the BMP are under way, impact weekly during the rainy season and of two-week intervals in the non-rainy season to verify continued BMP implementation.
- Keep all temporary roadway ditches clear.
- When no longer required, remove stabilized construction roadway and re-grade and repair slopes.
- Periodically apply additional aggregate on gravel roads.
- Active dirt construction roads are commonly watered three or more times per day during the dry season.

Costs

Gravel construction roads are moderately expensive, but cost is often balanced by reductions in construction delay. No additional costs for dust control on construction roads should be required above that needed to meet local air quality requirements.

References

Blueprint for a Clean Bay: Best Management Practices to Prevent Stormwater Pollution from Construction Related Activities; Santa Clara Valley Nonpoint Source Pollution Control Program, 1995.

Coastal Nonpoint Pollution Control Program; Program Development and Approval Guidance, Working Group, Working Paper; USEPA, April 1992.

Manual of Standards of Erosion and Sediment Control Measures, Association of Bay Area Governments, May 1995.

Stormwater Quality Handbooks Construction Site Best Management Practices (BMPs) Manual, State of California Department of Transportation (Caltrans), November 2000.

Stormwater Management for Construction Activities, Developing Pollution Prevention Plans and Best Management Practices, EPA 832-R-92005; USEPA, April 1992.

Stormwater Management of the Puget Sound Basin, Technical Manual, Publication #91-75, Washington State Department of Ecology, February 1992.

Virginia Erosion and Sedimentation Control Handbook, Virginia Department of Conservation and Recreation, Division of Soil and Water Conservation, 1991.

Water Quality Management Plan for the Lake Tahoe Region, Volume II, Handbook of Management Practices, Tahoe Regional Planning Agency, November 1988.

Entrance/Outlet Tire Wash TC-3

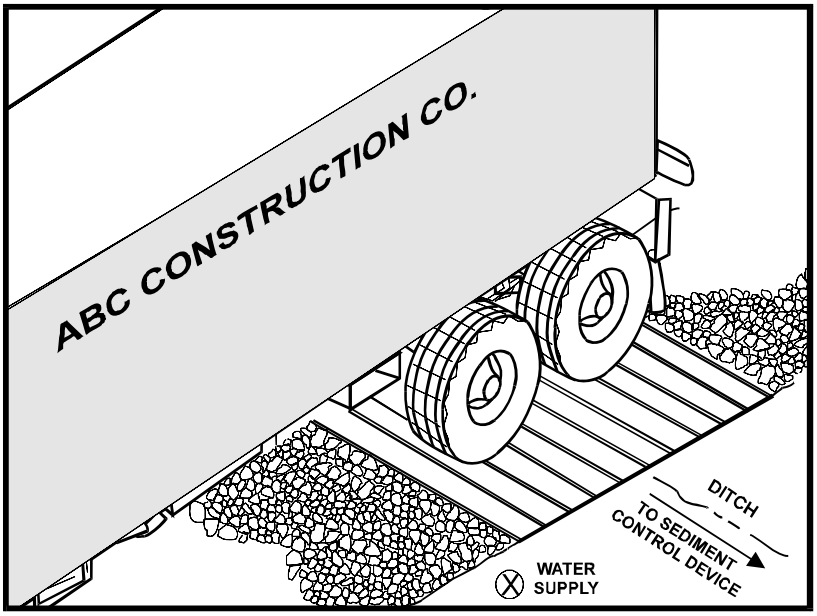

Categories

EC	Erosion Control	
SE	Sediment Control	☒
TC	Tracking Control	☑
WE	Wind Erosion Control	
NS	Non-Stormwater Management Control	
WM	Waste Management and Materials Pollution Control	

Legend:

☑ **Primary Objective**

☒ **Secondary Objective**

Targeted Constituents

Sediment	☑
Nutrients	
Trash	
Metals	
Bacteria	
Oil and Grease	
Organics	

Potential Alternatives

TC-1 Stabilized Construction Entrance/Exit

Description and Purpose

A tire wash is an area located at stabilized construction access points to remove sediment from tires and under carriages and to prevent sediment from being transported onto public roadways.

Suitable Applications

Tire washes may be used on construction sites where dirt and mud tracking onto public roads by construction vehicles may occur.

Limitations

- The tire wash requires a supply of wash water.
- A turnout or doublewide exit is required to avoid having entering vehicles drive through the wash area.
- Do not use where wet tire trucks leaving the site leave the road dangerously slick.

Implementation

- Incorporate with a stabilized construction entrance/exit. See TC-1, Stabilized Construction Entrance/Exit.
- Construct on level ground when possible, on a pad of coarse aggregate greater than 3 in. but smaller than 6 in. A geotextile fabric should be placed below the aggregate.
- Wash rack should be designed and constructed/manufactured for anticipated traffic loads.

- Provide a drainage ditch that will convey the runoff from the wash area to a sediment trapping device. The drainage ditch should be of sufficient grade, width, and depth to carry the wash runoff.
- Use hoses with automatic shutoff nozzles to prevent hoses from being left on.
- Require that all employees, subcontractors, and others that leave the site with mud caked tires and undercarriages to use the wash facility.
- Implement SC-7, Street Sweeping and Vacuuming, as needed.

Costs

Costs are low for installation of wash rack.

Inspection and Maintenance

- Inspect and verify that activity–based BMPs are in place prior to the commencement of associated activities. While activities associated with the BMP are under way, inspect weekly during the rainy season and of two-week intervals in the non-rainy season to verify continued BMP implementation.
- Inspect BMPs subject to non-stormwater discharge daily while non-stormwater discharges occur.
- Remove accumulated sediment in wash rack and/or sediment trap to maintain system performance.
- Inspect routinely for damage and repair as needed.

References

Blueprint for a Clean Bay: Best Management Practices to Prevent Stormwater Pollution from Construction Related Activities; Santa Clara Valley Nonpoint Source Pollution Control Program, 1995.

Coastal Nonpoint Pollution Control Program; Program Development and Approval Guidance, Working Group, Working Paper; USEPA, April 1992.

Manual of Standards of Erosion and Sediment Control Measures, Association of Bay Area Governments, May 1995.

Stormwater Quality Handbooks Construction Site Best Management Practices (BMPs) Manual, State of California Department of Transportation (Caltrans), November 2000.

Stormwater Management for Construction Activities, Developing Pollution Prevention Plans and Best Management Practices, EPA 832-R-92005; USEPA, April 1992.

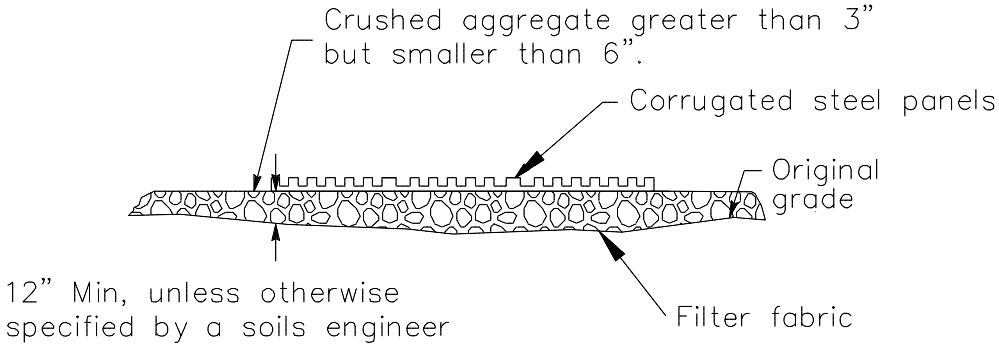

SECTION A–A
NOT TO SCALE

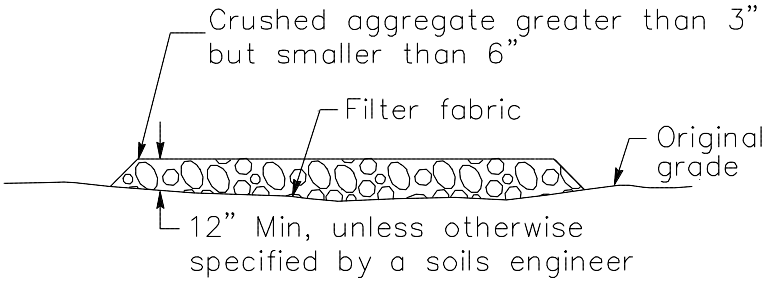

SECTION B–B
NTS

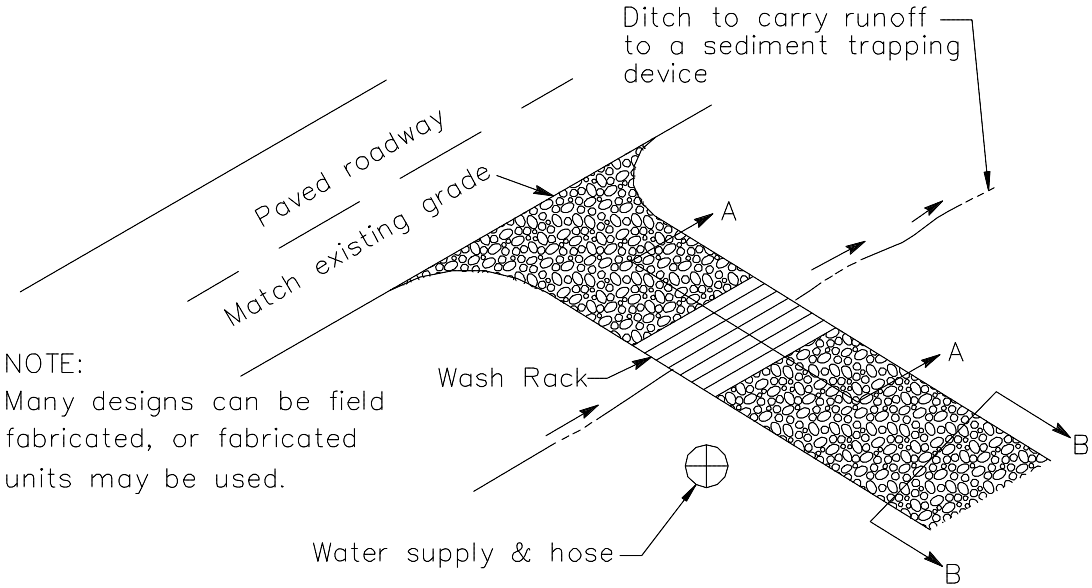

TYPICAL TIRE WASH
NOT TO SCALE

Section 4
Non-Stormwater Management and Material Management BMPs

4.1 Non-Stormwater Management BMPs

The discharge of materials other than stormwater and authorized non-stormwater discharges is prohibited by NPDES regulations as well as other local codes and ordinances. It is recognized that certain authorized non-stormwater discharges may be necessary for the completion of construction projects. Such discharges include but are not limited to irrigation of vegetative erosion control measures, and pipe flushing and testing.

Non-stormwater management BMPs are source control BMPs that prevent pollution by limiting or reducing potential pollutants at their source or eliminating off-site discharge. These practices involve day-to-day operations of the construction site and are usually under the control of the contractor. These BMPs are also referred to as "good housekeeping practices" which involve keeping a clean, orderly construction site.

Non-stormwater management BMPs also include procedures and practices designed to minimize or eliminate the discharge of pollutants from vehicle and equipment cleaning, fueling, and maintenance operations to stormwater drainage systems or to watercourses.

Table 4-1 Non-Stormwater Management BMPs

BMP#	BMP Name
NS-1	Water Conservation Practices
NS-2	Dewatering Operations[1]
NS-3	Paving and Grinding Operations[1]
NS-4	Temporary Stream Crossing
NS-5	Clear Water Diversion
NS-6	Illicit Connection/Discharge
NS-7	Potable Water/Irrigation
NS-8	Vehicle and Equipment Cleaning
NS-9	Vehicle and Equipment Fueling
NS-10	Vehicle and Equipment Maintenance
NS-11	Pile Driving Operations
NS-12	Concrete Curing[1]
NS-13	Concrete Finishing[1]
NS-14	Material and Equipment Use
NS-15	Demolition Adjacent to Water
NS-16	Temporary Batch Plants[1]

1) BMP fact sheet updated in 2009

Table 4-1 lists the non-stormwater management BMPs. All these BMPs must be implemented depending on the conditions and applicability of deployment described as part of the BMP. The key to implementing these BMPs is to maintain a clean site and keep water, runoff, and run-on away from potential pollutants, including bare soil. In general, conduct construction activities so that: potential pollutants are not discharged directly to drainage systems; generation of potential pollutants is limited; and pollutants that are generated are contained and cleaned up immediately and are therefore not available for later discharge. These BMPs are fundamental to water quality protection and all sites must implement non-stormwater BMPs appropriate for the construction activities being performed.

It is recommended that owners and contractors be vigilant regarding implementation of these BMPs, including making their implementation a condition of continued employment, and part

of all prime and subcontract agreements. By doing so, the chance of inadvertent violation by an uncaring individual can be prevented, potentially saving thousands of dollars in fines and project delays. Also, if procedures are not properly implemented and/or if BMPs are compromised then the discharge may be subject to additional sampling and analysis requirements for non-visible pollutants contained in the General Permit. (See section 2.5.5 of this handbook.)

4.2 Waste Management & Materials Pollution Control BMPs

Waste management and materials pollution control BMPs, like non-stormwater management BMPs, are source control BMPs that prevent pollution by limiting or reducing potential pollutants at their source before they come in contact with stormwater. These BMPs also involve day-to-day operations of the construction site, and are under the control of the contractor, and are additional "good housekeeping practices" which involve keeping a clean, orderly construction site. These BMPs are fundamental to water quality protection and all sites must implement waste management and/or materials pollution control non-stormwater BMPs appropriate for the construction activities being performed.

Table 4-2 Waste Management & Materials Pollution Control BMPs

BMP#	BMP Name
WM-1	Material Delivery and Storage[1]
WM-2	Material Use[1]
WM-3	Stockpile Management[1]
WM-4	Spill Prevention and Control
WM-5	Solid Waste Management
WM-6	Hazardous Waste Management
WM-7	Contaminated Soil Management
WM-8	Concrete Waste Management[1]
WM-9	Sanitary/ Septic Waste Management[1]
WM-10	Liquid Waste Management[1]
1) BMP fact sheet updated in 2009	

Waste management consists of implementing procedural and structural BMPs for handling, storing, and disposing of wastes generated by a construction project to prevent the release of waste materials into stormwater runoff or discharges through proper management of the following types of wastes:

- Solid
- Sanitary
- Concrete
- Hazardous
- Equipment-related wastes

Materials pollution control (also called materials handling) consists of implementing procedural and structural BMPs in the handling of, storing, and the using of construction materials. The BMPs are intended to prevent the release of pollutants during stormwater and non-stormwater discharges. The objective is to prevent or reduce the opportunity for contamination of stormwater runoff from construction materials by covering and/or providing secondary containment of storage areas and/or by taking adequate precautions when handling materials.

These controls must be implemented for all applicable activities, material usage, and site conditions. The discharge of construction materials or wastes from a site is prohibited.

Table 4-2 lists the waste management and materials pollution control BMPs. It is important to note that these BMPs should be implemented depending on the conditions/applicability of deployment described as part of the BMP.

4.3 Fact Sheet Format

A BMP fact sheet is a short document that presents detailed information about a particular BMP. Typically each fact sheet contains the information outlined in Figure 4-1. Completed fact sheets for each of the above activities are provided in Section 4.4.

The fact sheets also contain side bar presentations with information on BMP categories, targeted constituents, removal effectiveness, and potential alternatives.

NS-xx Example Fact Sheet

Description and Purpose

Suitable Applications

Limitations

Implementation

Costs

Inspection and Maintenance

References

Figure 4-1
Example Fact Sheet

4.4 BMP Fact Sheets

BMP Fact Sheets for non-stormwater management and waste management and materials pollution control follow. The BMP fact sheets are individually page numbered and are suitable for inclusions in SWPPPs. Copies of the fact sheets can be individually downloaded from the CASQA BMP Handbook website at http://www.casqa.org.

Water Conservation Practices NS-1

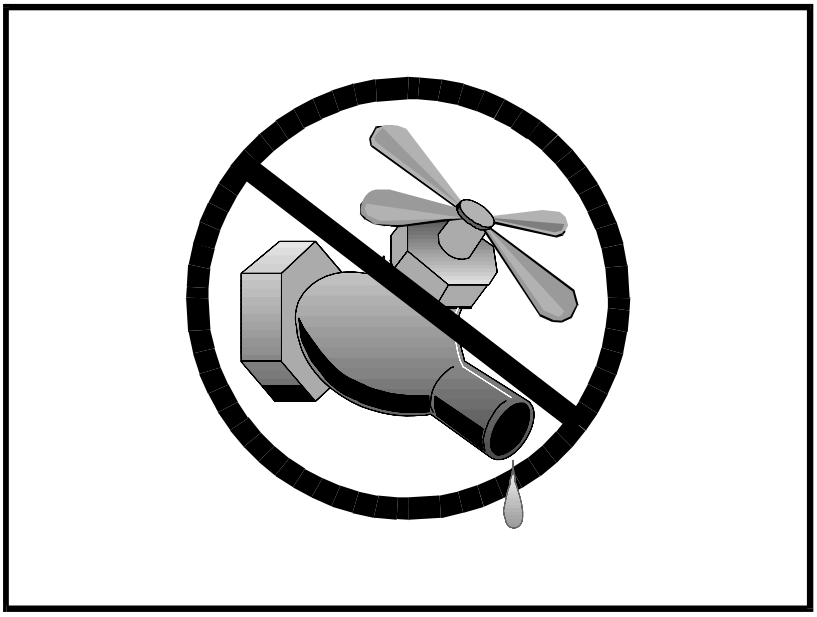

Categories		
EC	Erosion Control	☒
SE	Sediment Control	☒
TC	Tracking Control	
WE	Wind Erosion Control	
NS	Non-Stormwater Management Control	☑
WM	Waste Management and Materials Pollution Control	

Legend:

☑ **Primary Objective**

☒ **Secondary Objective**

Targeted Constituents	
Sediment	☑
Nutrients	
Trash	
Metals	
Bacteria	
Oil and Grease	
Organics	

Potential Alternatives

None

Description and Purpose

Water conservation practices are activities that use water during the construction of a project in a manner that avoids causing erosion and the transport of pollutants offsite. These practices can reduce or eliminate non-stormwater discharges.

Suitable Applications

Water conservation practices are suitable for all construction sites where water is used, including piped water, metered water, trucked water, and water from a reservoir.

Limitations

- None identified.

Implementation

- Keep water equipment in good working condition.
- Stabilize water truck filling area.
- Repair water leaks promptly.
- Washing of vehicles and equipment on the construction site is discouraged.
- Avoid using water to clean construction areas. If water must be used for cleaning or surface preparation, surface should be swept and vacuumed first to remove dirt. This will minimize amount of water required.
- Direct construction water runoff to areas where it can soak

into the ground or be collected and reused.

- Authorized non-stormwater discharges to the storm drain system, channels, or receiving waters are acceptable with the implementation of appropriate BMPs.
- Lock water tank valves to prevent unauthorized use.

Costs

The cost is small to none compared to the benefits of conserving water.

Inspection and Maintenance

- Inspect and verify that activity based BMPs are in place prior to the commencement of authorized non-stormwater discharges.
- Inspect BMPs subject to non-stormwater discharges daily while non-stormwater discharges are occuring.
- Repair water equipment as needed to prevent unintended discharges.
  - Water trucks
  - Water reservoirs (water buffalos)
  - Irrigation systems
  - Hydrant connections

References

Stormwater Quality Handbooks - Construction Site Best Management Practices (BMPs) Manual, State of California Department of Transportation (Caltrans), November 2000.

Dewatering Operations NS-2

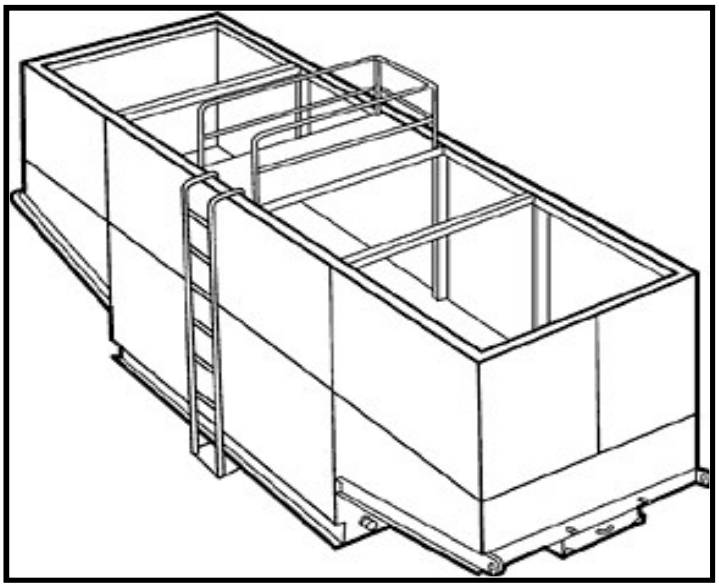

Categories		
EC	Erosion Control	
SE	Sediment Control	☒
TC	Tracking Control	
WE	Wind Erosion Control	
NS	Non-Stormwater Management Control	☑
WM	Waste Management and Materials Pollution Control	

Legend:
☑ **Primary Category**
☒ **Secondary Category**

Targeted Constituents	
Sediment	☑
Nutrients	
Trash	
Metals	
Bacteria	
Oil and Grease	☑
Organics	

Potential Alternatives

SE-5: Fiber Roll

SE-6: Gravel Bag Berm

Description and Purpose

Dewatering operations are practices that manage the discharge of pollutants when non-stormwater and accumulated precipitation (stormwater) must be removed from a work location to proceed with construction work or to provide vector control.

The General Permit incorporates Numeric Effluent Limits (NEL) and Numeric Action Levels (NAL) for turbidity (see Section 2 of this handbook to determine your project's risk level and if you are subject to these requirements).

Discharges from dewatering operations can contain high levels of fine sediment that, if not properly treated, could lead to exceedences of the General Permit requirements.

Suitable Applications

These practices are implemented for discharges of non-stormwater from construction sites. Non-stormwaters include, but are not limited to, groundwater, water from cofferdams, water diversions, and waters used during construction activities that must be removed from a work area to facilitate construction.

Practices identified in this section are also appropriate for implementation when managing the removal of accumulated precipitation (stormwater) from depressed areas at a construction site.

Stormwater mixed with non-stormwater should be managed as non-stormwater.

Limitations

- Dewatering operations will require, and should comply with applicable local and project-specific permits and regulations. In some areas, all dewatering activities, regardless of the discharge volume, require a dewatering permit.
- Site conditions will dictate design and use of dewatering operations.
- The controls discussed in this fact sheet primarily address sediment. Other secondary pollutant removal benefits are discussed where applicable.
- The controls detailed in this fact sheet only allow for minimal settling time for sediment particles. Use only when site conditions restrict the use of the other control methods.
- Avoid dewatering discharges where possible by using the water for dust control.

Implementation

- A Construction Site Monitoring Plan (CSMP) should be included in the project Stormwater Pollution Prevention Plan (SWPPP).
- Regional Water Quality Control Board (RWQCB) Regions may require notification and approval prior to any discharge of water from construction sites.
- The destination of discharge from dewatering activities will typically determine the type of permit required by the discharger. For example, when discharging to a water of the U.S., a groundwater extraction permit will be required through the site's governing RWQCB. When discharging to a sanitary sewer or Municipal Separate Storm Sewer System (MS4), a permit may need to be obtained through the owner of the sanitary sewer or MS4 in addition to obtaining an RWQCB dewatering permit. Additional permits or permissions from other agencies may be required for dewatering cofferdams or diversions.
- Dewatering discharges should not cause erosion at the discharge point. Appropriate BMPs should be implemented to maintain compliance with all applicable permits.
- Maintain dewatering records in accordance with all local and project-specific permits and regulations.

Sediment Treatment

A variety of methods can be used to treat water during dewatering operations. Several devices are presented below and provide options to achieve sediment removal. The sediment particle size and permit or receiving water limitations on sediment are key considerations for selecting sediment treatment option(s); in some cases, the use of multiple devices may be appropriate. Use of other enhanced treatment methods (i.e., introduction of chemicals or electric current to enhance flocculation and removal of sediment) must comply with: 1) for storm drain or surface water discharges, the requirements for Active Treatment Systems (SE-11); or 2) for sanitary sewer discharges, the requirements of applicable sanitary sewer discharge permits.

Sediment Basin (see also SE-2)

Description:

- A sediment basin is a temporary basin with a controlled release structure that is formed by excavation or construction of an embankment to detain sediment-laden runoff and allow sediment to settle out before discharging. Sediment basins are generally larger than Sediment Traps (SE-3) and have a designed outlet structure.

Appropriate Applications:

- Effective for the removal of trash, gravel, sand, silt, some metals that settle out with the sediment.

Implementation:

- Excavation and construction of related facilities is required.
- Temporary sediment basins should be fenced if safety is a concern.
- Outlet protection is required to prevent erosion at the outfall location.

Maintenance:

- Maintenance is required for safety fencing, vegetation, embankment, inlet and outlet, as well as other features.
- Removal of sediment is required when the storage volume is reduced by one-third.

Sediment Trap (See also SE-3)

Description:

- A sediment trap is a temporary basin formed by excavation and/or construction of an earthen embankment across a waterway or low drainage area to detain sediment-laden runoff and allow sediment to settle out before discharging. Sediment traps are generally smaller than Sediment Basins (SE-2) and do not have a designed outlet (but do have a spillway or overflow).

Appropriate Applications:

Effective for the removal of large and medium sized particles (sand and gravel) and some metals that settle out with the sediment.

Implementation:

- Excavation and construction of related facilities is required.
- Trap inlets should be located to maximize the travel distance to the trap outlet.
- Use rock or vegetation to protect the trap outlets against erosion.

Maintenance:

- Maintenance is required for vegetation, embankment, inlet and outfall structures, as well as other features.
- Removal of sediment is required when the storage volume is reduced by one-third.

Weir Tanks

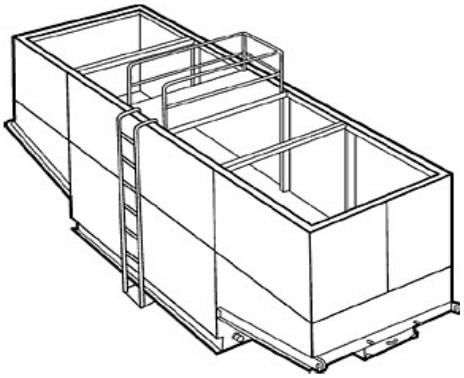

Description:

- A weir tank separates water and waste by using weirs. The configuration of the weirs (over and under weirs) maximizes the residence time in the tank and determines the waste to be removed from the water, such as oil, grease, and sediments.

Appropriate Applications:

- The tank removes trash, some settleable solids (gravel, sand, and silt), some visible oil and grease, and some metals (removed with sediment). To achieve high levels of flow, multiple tanks can be used in parallel. If additional treatment is desired, the tanks can be placed in series or as pre-treatment for other methods.

Implementation:

- Tanks are delivered to the site by the vendor, who can provide assistance with set-up and operation.
- Tank size will depend on flow volume, constituents of concern, and residency period required. Vendors should be consulted to appropriately size tank.
- Treatment capacity (i.e., volume and number of tanks) should provide at a minimum the required volume for discrete particle settling for treatment design flows.

Maintenance:

- Periodic cleaning is required based on visual inspection or reduced flow.
- Oil and grease disposal should be conducted by a licensed waste disposal company.

Dewatering Tanks

Description:

- A dewatering tank removes debris and sediment. Flow enters the tank through the top, passes through a fabric filter, and is discharged through the bottom of the tank. The filter separates the solids from the liquids.

Appropriate Applications:

- The tank removes trash, gravel, sand, and silt, some visible oil and grease, and some metals (removed with sediment). To achieve high levels of flow, multiple tanks can be used in parallel. If additional treatment is desired, the tanks can be placed in series or as pre-treatment for other methods.

Implementation:

- Tanks are delivered to the site by the vendor, who can provide assistance with set-up and operation.
- Tank size will depend on flow volume, constituents of concern, and residency period required. Vendors should be consulted to appropriately size tank.

Maintenance:

- Periodic cleaning is required based on visual inspection or reduced flow.
- Oil and grease disposal should be conducted by licensed waste disposal company.

Gravity Bag Filter

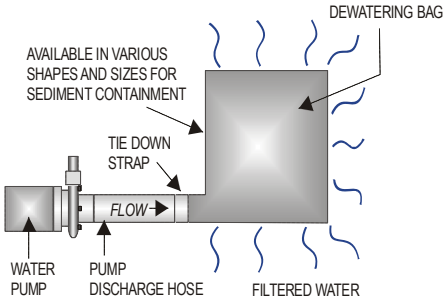

Description:

- A gravity bag filter, also referred to as a dewatering bag, is a square or rectangular bag made of non-woven geotextile fabric that collects gravel, sand, silt, and fines.

Appropriate Applications:

- Effective for the removal of sediments (gravel, sand, silt, and fines). Some metals are removed with the sediment.

Implementation:

- Water is pumped into one side of the bag and seeps through the top, bottom, and sides of the bag.
- Place filter bag on pavement or a gravel bed or paved surface. Avoid placing a dewatering bag on unprotected bare soil. If placing the bag on bare soil is unavoidable, a secondary barrier should be used, such as a rock filter bed placed beneath and beyond the edges of the bag to, prevent erosion and capture sediments that escape the bag.
- Perimeter control around the downstream end of the bag should be implemented. Secondary sediment controls are important especially in the initial stages of discharge, which tend to allow fines to pass through the bag.

Maintenance:

- Inspection of the flow conditions, bag condition, bag capacity, and the secondary barrier (as applicable) is required.
- Replace the bag when it no longer filters sediment or passes water at a reasonable rate.
- Caution should be taken when removing and disposing of the bag, to prevent the release of captured sediment
- Properly dispose of the bag offsite. If sediment is removed from the bag prior to disposal (bags can potentially be reused depending upon their condition), dispose of sediment in accordance with the general maintenance procedures described at the end of this BMP Fact Sheet.

Sand Media Particulate Filter

Description:

- Water is treated by passing it through canisters filled with sand media. Generally, sand filters provide a final level of treatment. They are often used as a secondary or higher level of treatment after a significant amount of sediment and other pollutants have been removed using other methods.

Appropriate Applications:

- Effective for the removal of trash, gravel, sand, and silt and some metals, as well as the reduction of biochemical oxygen demand (BOD) and turbidity.
- Sand filters can be used for stand-alone treatment or in conjunction with bag and cartridge filtration if further treatment is required.
- Sand filters can also be used to provide additional treatment to water treated via settling or basic filtration.

Implementation:

- The filters require delivery to the site and initial set up. The vendor can provide assistance with installation and operation.

Maintenance:

- The filters require regular service to monitor and maintain the level of the sand media. If subjected to high loading rates, filters can plug quickly.
- Venders generally provide data on maximum head loss through the filter. The filter should be monitored daily while in use, and cleaned when head loss reaches target levels.
- If cleaned by backwashing, the backwash water may need to be hauled away for disposal, or returned to the upper end of the treatment train for another pass through the series of dewatering BMPs.

Pressurized Bag Filter

Description:

- A pressurized bag filter is a unit composed of single filter bags made from polyester felt material. The water filters through the unit and is discharged through a header. Vendors provide bag filters in a variety of configurations. Some units include a combination of bag filters and cartridge filters for enhanced contaminant removal.

Appropriate Applications:

- Effective for the removal of sediment (sand and silt) and some metals, as well as the reduction of BOD, turbidity, and hydrocarbons. Oil absorbent bags are available for hydrocarbon removal.

- Filters can be used to provide secondary treatment to water treated via settling or basic filtration.

Implementation:

- The filters require delivery to the site and initial set up. The vendor can provide assistance with installation and operation.

Maintenance:

- The filter bags require replacement when the pressure differential equals or exceeds the manufacturer's recommendation.

Cartridge Filter

Description:

- Cartridge filters provide a high degree of pollutant removal by utilizing a number of individual cartridges as part of a larger filtering unit. They are often used as a secondary or higher (polishing) level of treatment after a significant amount of sediment and other pollutants are removed. Units come with various cartridge configurations (for use in series with bag filters) or with a larger single cartridge filtration unit (with multiple filters within).

Appropriate Applications:

- Effective for the removal of sediment (sand, silt, and some clays) and metals, as well as the reduction of BOD, turbidity, and hydrocarbons. Hydrocarbons can effectively be removed with special resin cartridges.

- Filters can be used to provide secondary treatment to water treated via settling or basic filtration.

Implementation:

- The filters require delivery to the site and initial set up. The vendor can provide assistance.

Maintenance:

- The cartridges require replacement when the pressure differential equals or exceeds the manufacturer's recommendation.

Costs

- Sediment control costs vary considerably depending on the dewatering and sediment treatment system that is selected. Pressurized filters tend to be more expensive than gravity settling, but are often more effective. Simple tanks are generally rented on a long-term basis (one or more months) and can range from $360 per month for a 1,000 gallon tank to $2,660 per month for a 10,000 gallon tank. Mobilization and demobilization costs vary considerably.

Inspection and Maintenance

- Inspect and verify that dewatering BMPs are in place and functioning prior to the commencement of activities requiring dewatering.

- Inspect dewatering BMPs daily while dewatering activities are being conducted.

- Inspect all equipment before use. Monitor dewatering operations to ensure they do not cause offsite discharge or erosion.
- Sample dewatering discharges as required by the General Permit.
- Unit-specific maintenance requirements are included with the description of each unit.
- Sediment removed during the maintenance of a dewatering device may be either spread onsite and stabilized, or disposed of at a disposal site as approved by the owner.
- Sediment that is commingled with other pollutants should be disposed of in accordance with all applicable laws and regulations and as approved by the owner.

References

Blueprint for a Clean Bay: Best Management Practices to Prevent Stormwater Pollution from Construction Related Activities; Santa Clara Valley Nonpoint Source Pollution Control Program, 1995.

Stormwater Quality Handbooks - Construction Site Best Management Practices (BMPs) Manual, State of California Department of Transportation (Caltrans), March 2003; Updated March 2004.

Stormwater Management for Construction Activities, Developing Pollution Prevention Plans and Best Management Practices, EPA 832-R-92005; USEPA, April 1992.

Labor Surcharge & Equipment Rental Rates, April 1, 2002 through March 31, 2003, California Department of Transportation (Caltrans).

Erosion and Sediment Control Manual, Oregon Department of Environmental Quality, February 2005.

Paving and Grinding Operations NS-3

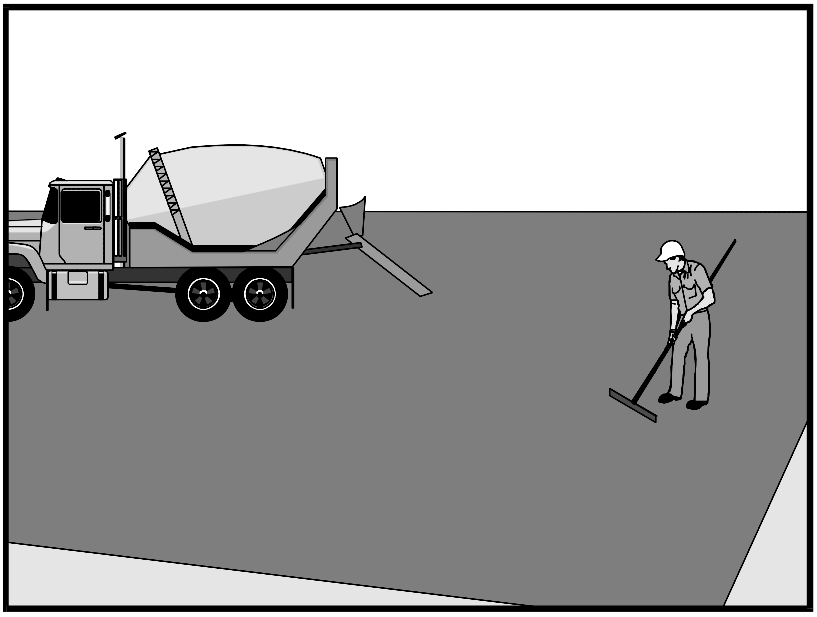

Categories

EC	Erosion Control	
SE	Sediment Control	
TC	Tracking Control	
WE	Wind Erosion Control	
NS	Non-Stormwater Management Control	☑
WM	Waste Management and Materials Pollution Control	☒

Legend:

☑ **Primary Category**

☒ **Secondary Category**

Targeted Constituents

Sediment	☑
Nutrients	
Trash	
Metals	
Bacteria	
Oil and Grease	☑
Organics	

Potential Alternatives

None

Description and Purpose

Prevent or reduce the discharge of pollutants from paving operations, using measures to prevent runon and runoff pollution, properly disposing of wastes, and training employees and subcontractors.

The General Permit incorporates Numeric Effluent Limits (NEL) and Numeric Action Levels (NAL) for pH and turbidity (see Section 2 of this handbook to determine your project's risk level and if you are subject to these requirements).

Many types of construction materials associated with paving and grinding operations, including mortar, concrete, and cement and their associated wastes have basic chemical properties that can raise pH levels outside of the permitted range. Additional care should be taken when managing these materials to prevent them from coming into contact with stormwater flows, which could lead to exceedances of the General Permit requirements.

Suitable Applications

These procedures are implemented where paving, surfacing, resurfacing, or sawcutting, may pollute stormwater runoff or discharge to the storm drain system or watercourses.

Limitations

- Paving opportunities may be limited during wet weather.
- Discharges of freshly paved surfaces may raise pH to environmentally harmful levels and trigger permit violations.

Implementation

General

- Avoid paving during the wet season when feasible.
- Reschedule paving and grinding activities if rain is forecasted.
- Train employees and sub-contractors in pollution prevention and reduction.
- Store materials away from drainage courses to prevent stormwater runon (see WM-1, Material Delivery and Storage).
- Protect drainage courses, particularly in areas with a grade, by employing BMPs to divert runoff or to trap and filter sediment.
- Stockpile material removed from roadways away from drain inlets, drainage ditches, and watercourses. These materials should be stored consistent with WM-3, Stockpile Management.
- Disposal of PCC (Portland cement concrete) and AC (asphalt concrete) waste should be in conformance with WM-8, Concrete Waste Management.

Saw Cutting, Grinding, and Pavement Removal

- Shovel or vacuum saw-cut slurry and remove from site. Cover or barricade storm drains during saw cutting to contain slurry.
- When paving involves AC, the following steps should be implemented to prevent the discharge of grinding residue, uncompacted or loose AC, tack coats, equipment cleaners, or unrelated paving materials:
  - AC grindings, pieces, or chunks used in embankments or shoulder backing should not be allowed to enter any storm drains or watercourses. Install inlet protection and perimeter controls until area is stabilized (i.e. cutting, grinding or other removal activities are complete and loose material has been properly removed and disposed of)or permanent controls are in place. Examples of temporary perimeter controls can be found in EC-9, Earth Dikes and Drainage Swales; SE-1, Silt Fence; SE-5, Fiber Rolls, or SE-13 Compost Socks and Berms
  - Collect and remove all broken asphalt and recycle when practical. Old or spilled asphalt should be recycled or disposed of properly.
- Do not allow saw-cut slurry to enter storm drains or watercourses. Residue from grinding operations should be picked up by a vacuum attachment to the grinding machine, or by sweeping, should not be allowed to flow across the pavement, and should not be left on the surface of the pavement. See also WM-8, Concrete Waste Management, and WM-10, Liquid Waste Management.
- Pavement removal activities should not be conducted in the rain.
- Collect removed pavement material by mechanical or manual methods. This material may be recycled for use as shoulder backing or base material.

- If removed pavement material cannot be recycled, transport the material back to an approved storage site.

Asphaltic Concrete Paving

- If paving involves asphaltic cement concrete, follow these steps:
  - Do not allow sand or gravel placed over new asphalt to wash into storm drains, streets, or creeks. Vacuum or sweep loose sand and gravel and properly dispose of this waste by referring to WM-5, Solid Waste Management.
  - Old asphalt should be disposed of properly. Collect and remove all broken asphalt from the site and recycle whenever possible.

Portland Cement Concrete Paving

- Do not wash sweepings from exposed aggregate concrete into a storm drain system. Collect waste materials by dry methods, such as sweeping or shoveling, and return to aggregate base stockpile or dispose of properly. Allow aggregate rinse to settle. Then, either allow rinse water to dry in a temporary pit as described in WM-8, Concrete Waste Management, or pump the water to the sanitary sewer if authorized by the local wastewater authority.

Sealing Operations

- During chip seal application and sweeping operations, petroleum or petroleum covered aggregate should not be allowed to enter any storm drain or water courses. Apply temporary perimeter controls until structure is stabilized (i.e. all sealing operations are complete and cured and loose materials have been properly removed and disposed).
- Inlet protection (SE-10, Storm Drain Inlet Protection) should be used during application of seal coat, tack coat, slurry seal, and fog seal.
- Seal coat, tack coat, slurry seal, or fog seal should not be applied if rainfall is predicted to occur during the application or curing period.

Paving Equipment

- Leaks and spills from paving equipment can contain toxic levels of heavy metals and oil and grease. Place drip pans or absorbent materials under paving equipment when not in use. Clean up spills with absorbent materials and dispose of in accordance with the applicable regulations. See NS-10, Vehicle and Equipment Maintenance, WM-4, Spill Prevention and Control, and WM-10, Liquid Waste Management.
- Substances used to coat asphalt transport trucks and asphalt spreading equipment should not contain soap and should be non-foaming and non-toxic.
- Paving equipment parked onsite should be parked over plastic to prevent soil contamination.
- Clean asphalt coated equipment offsite whenever possible. When cleaning dry, hardened asphalt from equipment, manage hardened asphalt debris as described in WM-5, Solid Waste Management. Any cleaning onsite should follow NS-8, Vehicle and Equipment Cleaning.

Thermoplastic Striping

- Thermoplastic striper and pre-heater equipment shutoff valves should be inspected to ensure that they are working properly to prevent leaking thermoplastic from entering drain inlets, the stormwater drainage system, or watercourses.
- Pre-heaters should be filled carefully to prevent splashing or spilling of hot thermoplastic. Leave six inches of space at the top of the pre-heater container when filling thermoplastic to allow room for material to move.
- Do not pre-heat, transfer, or load thermoplastic near drain inlets or watercourses.
- Clean truck beds daily of loose debris and melted thermoplastic. When possible, recycle thermoplastic material.

Raised/Recessed Pavement Marker Application and Removal

- Do not transfer or load bituminous material near drain inlets, the stormwater drainage system, or watercourses.
- Melting tanks should be loaded with care and not filled to beyond six inches from the top to leave room for splashing.
- When servicing or filling melting tanks, ensure all pressure is released before removing lids to avoid spills.
- On large-scale projects, use mechanical or manual methods to collect excess bituminous material from the roadway after removal of markers.

Costs

- All of the above are low cost measures.

Inspection and Maintenance

- Inspect and verify that activity-based BMPs are in place prior to the commencement of paving and grinding operations.
- BMPs must be inspected in accordance with General Permit requirements for the associated project type and risk level. It is recommended that at a minimum, BMPs be inspected weekly, prior to forecasted rain events, daily during extended rain events, and after the conclusion of rain events.
- Sample stormwater runoff required by the General Permit.
- Keep ample supplies of drip pans or absorbent materials onsite.
- Inspect and maintain machinery regularly to minimize leaks and drips.

References

Blueprint for a Clean Bay: Best Management Practices to Prevent Stormwater Pollution from Construction Related Activities; Santa Clara Valley Nonpoint Source Pollution Control Program, 1995.

Hot Mix Asphalt-Paving Handbook AC 150/5370-14, Appendix I, U.S. Army Corps of Engineers, July 1991.

Stormwater Quality Handbooks - Construction Site Best Management Practices (BMPs) Manual, State of California Department of Transportation (Caltrans), March 2003.

Erosion and Sediment Control Manual, Oregon Department of Environmental Quality, February 2005.

Temporary Stream Crossing NS-4

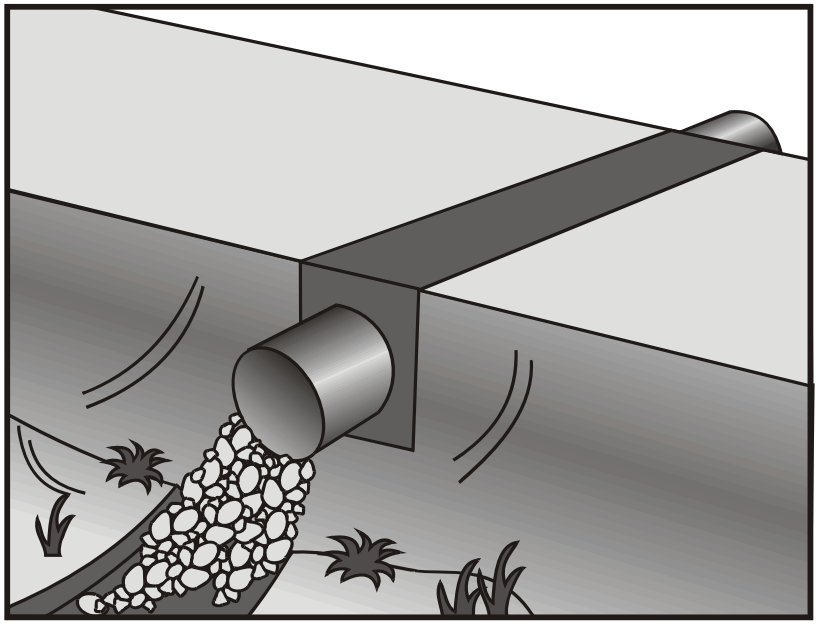

Categories		
EC	Erosion Control	☒
SE	Sediment Control	☒
TC	Tracking Control	☒
WE	Wind Erosion Control	
NS	Non-Stormwater Management Control	☑
WM	Waste Management and Materials Pollution Control	

Legend:

☑ **Primary Objective**

☒ **Secondary Objective**

Targeted Constituents	
Sediment	☑
Nutrients	
Trash	
Metals	
Bacteria	
Oil and Grease	
Organics	

Potential Alternatives

None

Description and Purpose

A temporary stream crossing is a temporary culvert, ford or bridge placed across a waterway to provide access for construction purposes for a period of less than one year. Temporary access crossings are not intended to maintain traffic for the public. The temporary access will eliminate erosion and downstream sedimentation caused by vehicles.

Suitable Applications

Temporary stream crossings should be installed at all designated crossings of perennial and intermittent streams on the construction site, as well as for dry channels that may be significantly eroded by construction traffic.

Temporary streams crossings are installed at sites:

- Where appropriate permits have been secured (404 Permits, and 401 Certifications)
- Where construction equipment or vehicles need to frequently cross a waterway
- When alternate access routes impose significant constraints
- When crossing perennial streams or waterways causes significant erosion
- Where construction activities will not last longer than one year
- Where appropriate permits have been obtained for the

stream crossing

Limitations

The following limitations may apply:

- Installation and removal will usually disturb the waterway.
- Installation may require Regional Water Quality Control Board (RWQCB) 401 Certification, U.S. Army Corps of Engineers 404 permit and approval by California Department of Fish and Game. If numerical-based water quality standards are mentioned in any of these and other related permits, testing and sampling may be required.
- Installation may require dewatering or temporary diversion of the stream. See NS-2, Dewatering Operations and NS-5, Clear Water Diversion.
- Installation may cause a constriction in the waterway, which can obstruct flood flow and cause flow backups or washouts. If improperly designed, flow backups can increase the pollutant load through washouts and scouring.
- Use of natural or other gravel in the stream for construction of Cellular Confinement System (CCS) ford crossing will be contingent upon approval by fisheries agencies.
- Ford crossings may degrade water quality due to contact with vehicles and equipment.
- May be expensive for a temporary improvement.
- Requires other BMPs to minimize soil disturbance during installation and removal.
- Fords should only be used in dry weather.

Implementation

General

The purpose of this BMP is to provide a safe, erosion-free access across a stream for construction equipment. Minimum standards and specifications for the design, construction, maintenance, and removal of the structure should be established by an engineer registered in California. Temporary stream crossings may be necessary to prevent construction equipment from causing erosion of the stream and tracking sediment and other pollutants into the stream.

Temporary stream crossings are used as access points to construction sites when other detour routes may be too long or burdensome for the construction equipment. Often heavy construction equipment must cross streams or creeks, and detour routes may impose too many constraints such as being too narrow or poor soil strength for the equipment loadings. Additionally, the contractor may find a temporary stream crossing more economical for light–duty vehicles to use for frequent crossings, and may have less environmental impact than construction of a temporary access road.

Location of the temporary stream crossing should address:

- Site selection where erosion potential is low.

- Areas where the side slopes from site runoff will not spill into the side slopes of the crossing.

The following types of temporary stream crossings should be considered:

- **Culverts** – A temporary culvert is effective in controlling erosion but will cause erosion during installation and removal. A temporary culvert can be easily constructed and allows for heavy equipment loads.

- **Fords** - Appropriate during the dry season in arid areas. Used on dry washes and ephemeral streams, and low-flow perennial streams. CCS, a type of ford crossing, is also appropriate for use in streams that would benefit from an influx of gravels. A temporary ford provides little sediment and erosion control and is ineffective in controlling erosion in the stream channel. A temporary ford is the least expensive stream crossing and allows for maximum load limits. It also offers very low maintenance. Fords are more appropriate during the dry ice season and in arid areas of California.

- **Bridges** - Appropriate for streams with high flow velocities, steep gradients and where temporary restrictions in the channel are not allowed.

Design

During the long summer construction season in much of California, rainfall is infrequent and many streams are dry. Under these conditions, a temporary ford may be sufficient. A ford is not appropriate if construction will continue through the winter rainy season, if summer thunderstorms are likely, or if the stream flows during most of the year. Temporary culverts and bridges should then be considered and, if used, should be sized to pass a significant design storm (i.e., at least a 10-year storm). The temporary stream crossing should be protected against erosion, both to prevent excessive sedimentation in the stream and to prevent washout of the crossing.

Design and installation requires knowledge of stream flows and soil strength. Designs should be prepared under direction of, and approved by, a registered civil engineer and for bridges, a registered structural engineer. Both hydraulic and construction loading requirements should be considered with the following:

- Comply with any special requirements for culvert and bridge crossings, particularly if the temporary stream crossing will remain through the rainy season.

- Provide stability in the crossing and adjacent areas to withstand the design flow. The design flow and safety factor should be selected based on careful evaluation of the risks due to over topping, flow backups, or washout.

- Install sediment traps immediately downstream of crossings to capture sediments. See SE-3, Sediment Trap.

- Avoid oil or other potentially hazardous materials for surface treatment.

- Culverts are relatively easy to construct and able to support heavy equipment loads.

- Fords are the least expensive of the crossings, with maximum load limits.

- CCS crossing structures consist of clean, washed gravel and cellular confinement system blocks. CCS are appropriate for streams that would benefit from an influx of gravel; for example, salmonid streams, streams or rivers below reservoirs, and urban, channelized streams. Many urban stream systems are gravel-deprived due to human influences, such as dams, gravel mines, and concrete channels.
- CCS allow designers to use either angular or naturally occurring rounded gravel, because the cells provide the necessary structure and stability. In fact, natural gravel is optimal for this technique, because of the habitat improvement it will provide after removal of the CCS.
- A gravel depth of 6 to 12 in. for a CCS structure is sufficient to support most construction equipment.
- An advantage of a CCS crossing structure is that relatively little rock or gravel is needed, because the CCS provides the stability.
- Bridges are generally more expensive to design and construct, but provide the least disturbance of the streambed and constriction of the waterway flows.

Construction and Use

- Stabilize construction roadways, adjacent work area, and stream bottom against erosion.
- Construct during dry periods to minimize stream disturbance and reduce costs.
- Construct at or near the natural elevation of the streambed to prevent potential flooding upstream of the crossing.
- Install temporary erosion control BMPs in accordance with erosion control BMP fact sheets to minimize erosion of embankment into flow lines.
- Any temporary artificial obstruction placed within flowing water should only be built from material, such as clean gravel or sandbags, that will not introduce sediment or silt into the watercourse.
- Temporary water body crossings and encroachments should be constructed to minimize scour. Cobbles used for temporary water body crossings or encroachments should be clean, rounded river cobble.
- Vehicles and equipment should not be driven, operated, fueled, cleaned, maintained, or stored in the wet or dry portions of a water body where wetland vegetation, riparian vegetation, or aquatic organisms may be destroyed.
- The exterior of vehicles and equipment that will encroach on the water body within the project should be maintained free of grease, oil, fuel, and residues.
- Drip pans should be placed under all vehicles and equipment placed on docks, barges, or other structures over water bodies when the vehicle or equipment is planned to be idle for more than one hour.

- Disturbance or removal of vegetation should not exceed the minimum necessary to complete operations. Precautions should be taken to avoid damage to vegetation by people or equipment. Disturbed vegetation should be replaced with the appropriate soil stabilization measures.

- Riparian vegetation, when removed pursuant to the provisions of the work, should be cut off no lower than ground level to promote rapid re-growth. Access roads and work areas built over riparian vegetation should be covered by a sufficient layer of clean river run cobble to prevent damage to the underlying soil and root structure. The cobble must be removed upon completion of project activities.

- Conceptual temporary stream crossings are shown in the attached figures.

Costs

Caltrans Construction Cost index for temporary bridge crossings is $45-$95/ft^2.

Inspection and Maintenance

- Inspect and verify that activity-based BMPs are in place prior to the commencement of associated activities. While activities associated with the BMP are under way, inspect weekly during the rainy season and at two week intervals in the non-rainy season to verify continued BMP implementation.

- Check for blockage in the channel, sediment buildup or trapped debris in culverts, blockage behind fords or under bridges

- Check for erosion of abutments, channel scour, riprap displacement, or piping in the soil

- Check for structural weakening of the temporary crossings, such as cracks, and undermining of foundations and abutments

- Remove sediment that collects behind fords, in culverts, and under bridges periodically

- Replace lost or displaced aggregate from inlets and outlets of culverts and cellular confinement systems

- Remove temporary crossing promptly when it is no longer needed

References

California Bank and Shore Rock Slope Protection Design – Practitioners Guide and Field Evaluations of Riprap Methods, Caltrans Study No. F90TL03, October 2000.

Stormwater Quality Handbooks - Construction Site Best Management Practices (BMPs) Manual, State of California Department of Transportation (Caltrans), November 2000.

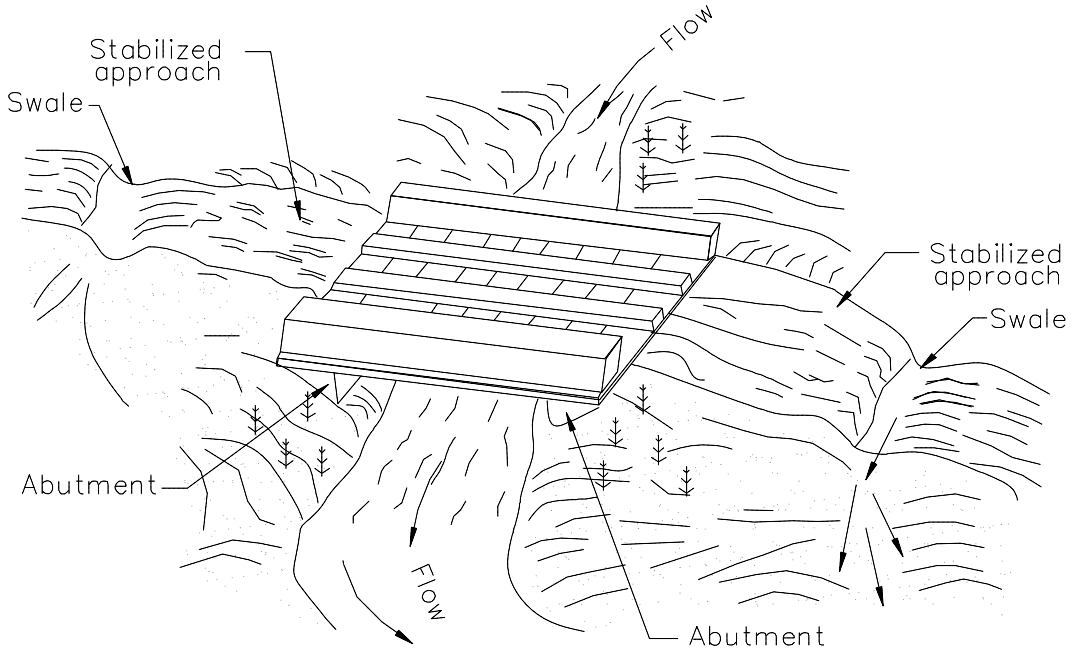

NOTE:
Surface flow of road diverted by swale and/or dike.

TYPICAL BRIDGE CROSSING
NOT TO SCALE

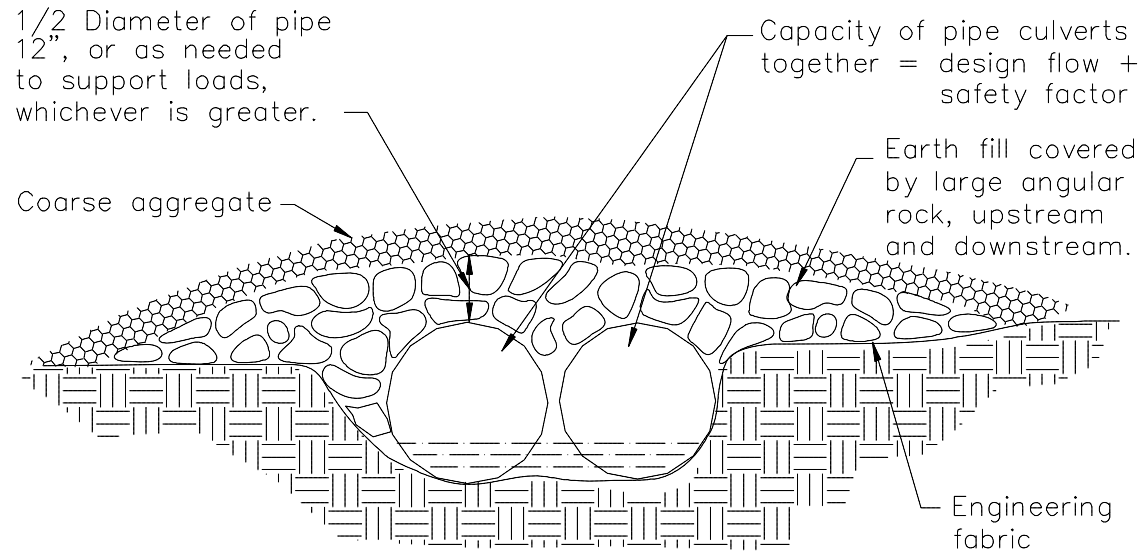

ELEVATION

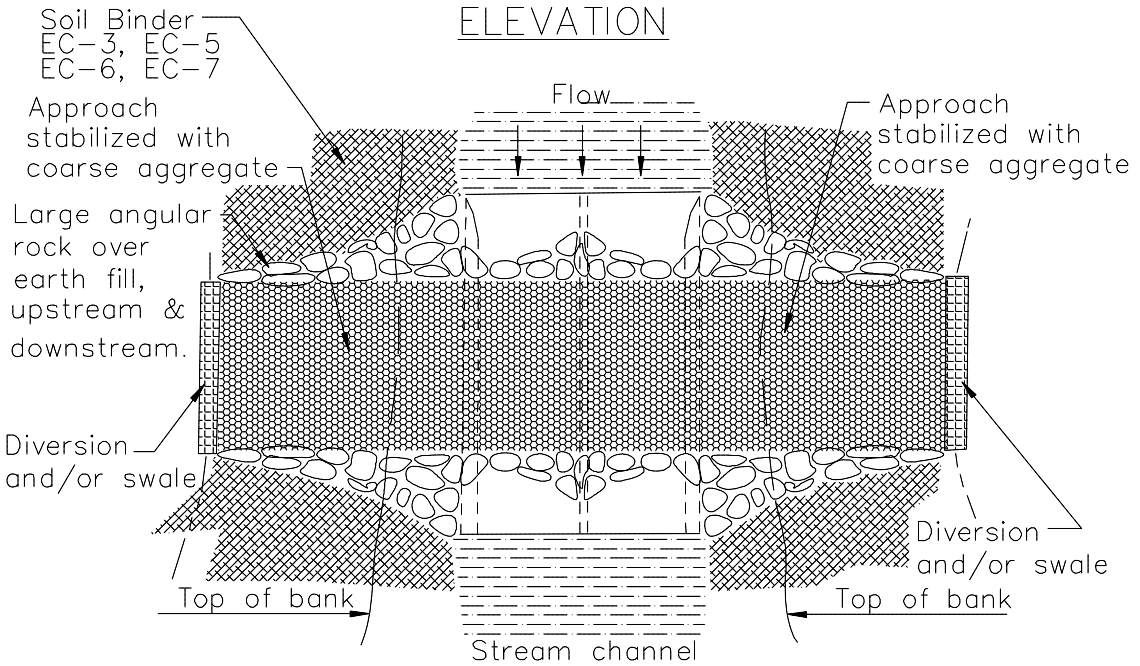

PLAN VIEW

TYPICAL CULVERT CROSSING

NOT TO SCALE

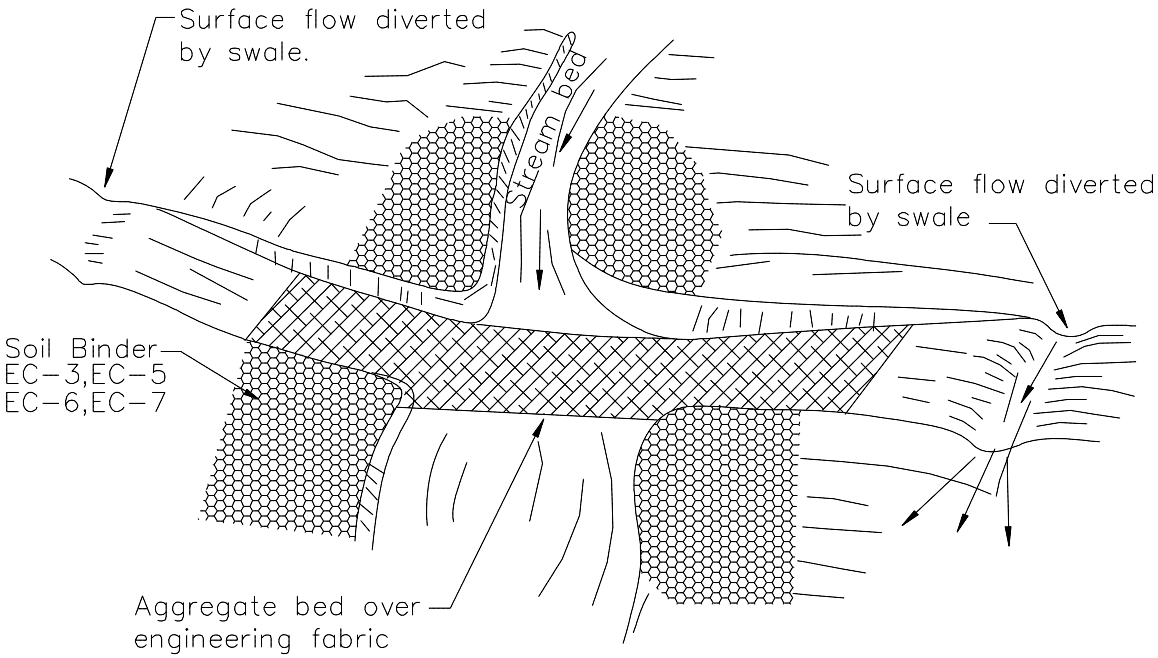

Aggregate approch
1:5 (V:H) Maximum slope on road

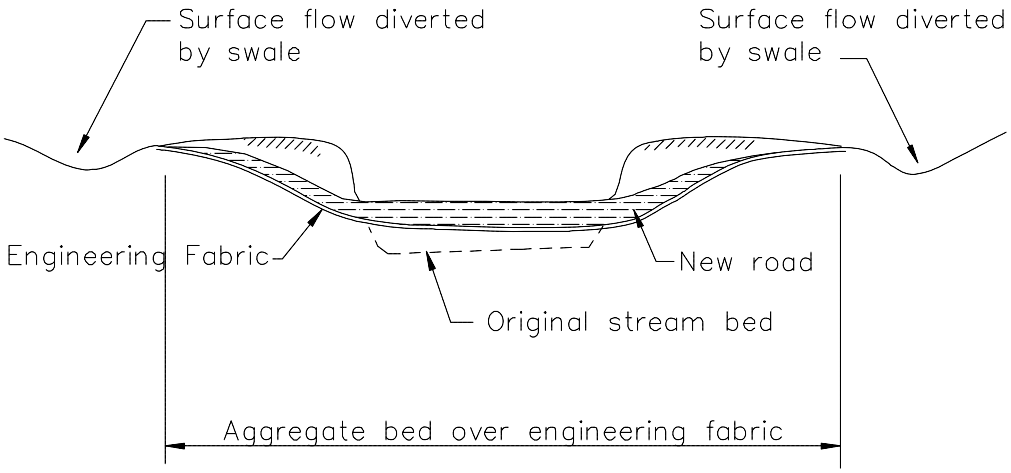

TYPICAL FORD CROSSING
NOT TO SCALE

Clear Water Diversion NS-5

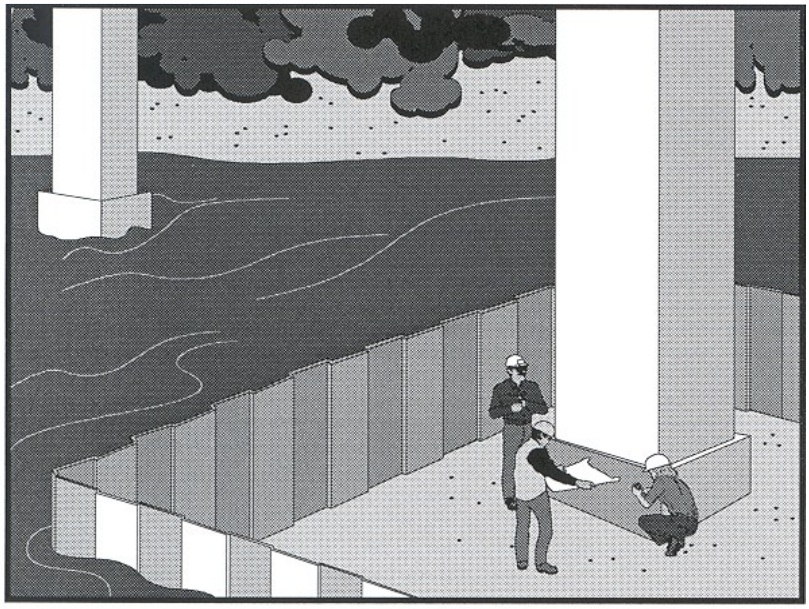

Categories

EC	Erosion Control	
SE	Sediment Control	
TC	Tracking Control	
WE	Wind Erosion Control	
NS	Non-Stormwater Management Control	☑
WM	Waste Management and Materials Pollution Control	

Legend:

☑ **Primary Objective**

☒ **Secondary Objective**

Targeted Constituents

Sediment	☑
Nutrients	
Trash	
Metals	
Bacteria	
Oil and Grease	
Organics	

Potential Alternatives

None

Description and Purpose

Clear water diversion consists of a system of structures and measures that intercept clear surface water runoff upstream of a project, transport it around the work area, and discharge it downstream with minimal water quality degradation from either the project construction operations or the construction of the diversion. Clear water diversions are used in a waterway to enclose a construction area and reduce sediment pollution from construction work occurring in or adjacent to water. Structures commonly used as part of this system include diversion ditches, berms, dikes, slope drains, rock, gravel bags, wood, aqua barriers, cofferdams, filter fabric or turbidity curtains, drainage and interceptor swales, pipes, or flumes.

Suitable Applications

A clear water diversion is typically implemented where appropriate permits (1601 Agreement) have been secured and work must be performed in a flowing stream or water body.

- Clear water diversions are appropriate for isolating construction activities occurring within or near a water body such as streambank stabilization, or culvert, bridge, pier or abutment installation. They may also be used in combination with other methods, such as clear water bypasses and/or pumps.
- Pumped diversions are suitable for intermittent and low flow streams.
- Excavation of a temporary bypass channel, or passing the

flow through a heavy pipe (called a "flume") with a trench excavated under it, is appropriate for the diversion of streams less than 20 ft wide, with flow rates less than 100 cfs.

- Clear water diversions incorporating clean washed gravel may be appropriate for use in salmonid spawning streams.

Limitations

- Diversion and encroachment activities will usually disturb the waterway during installation and removal of diversion structures.
- Installation may require Regional Water Quality Control Board (RWQCB) 401 Certification, U.S. Army Corps of Engineers 404 permit and approval by California Department of Fish and Game. If numerical-based water quality standards are mentioned in any of these and other related permits, testing and sampling may be required.
- Diversion and encroachment activities may constrict the waterway, which can obstruct flood flows and cause flooding or washouts. Diversion structures should not be installed without identifying potential impacts to the stream channel.
- Diversion or isolation activities are not appropriate in channels where there is insufficient stream flow to support aquatic species in the area dewatered as a result of the diversion.
- Diversion or isolation activities are inappropriate in deep water unless designed or reviewed by an engineer registered in California.
- Diversion or isolation activities should not completely dam stream flow.
- Dewatering and removal may require additional sediment control or water treatment. See NS-2, Dewatering Operations.
- Not appropriate if installation, maintenance, and removal of the structures will disturb sensitive aquatic species of concern.

Implementation

General

- Implement guidelines presented in NS-17, Streambank Stabilization to minimize impacts to streambanks.
- Where working areas encroach on flowing streams, barriers adequate to prevent the flow of muddy water into streams should be constructed and maintained between working areas and streams. During construction of the barriers, muddying of streams should be held to a minimum.
- Diversion structures must be adequately designed to accommodate fluctuations in water depth or flow volume due to tides, storms, flash floods, etc.
- Heavy equipment driven in wet portions of a water body to accomplish work should be completely clean of petroleum residue, and water levels should be below the fuel tanks, gearboxes, and axles of the equipment unless lubricants and fuels are sealed such that inundation by water will not result in discharges of fuels, oils, greases, or hydraulic fluids.

- Excavation equipment buckets may reach out into the water for the purpose of removing or placing fill materials. Only the bucket of the crane/ excavator/backhoe may operate in a water body. The main body of the crane/excavator/backhoe should not enter the water body except as necessary to cross the stream to access the work site.
- Stationary equipment such as motors and pumps located within or adjacent to a water body, should be positioned over drip pans.
- When any artificial obstruction is being constructed, maintained, or placed in operation, sufficient water should, at all times, be allowed to pass downstream to maintain aquatic life.
- Equipment should not be parked below the high water mark unless allowed by a permit.
- Disturbance or removal of vegetation should not exceed the minimum necessary to complete operations. Precautions should be taken to avoid damage to vegetation by people or equipment. Disturbed vegetation should be replaced with the appropriate erosion control measures.
- Riparian vegetation approved for trimming as part of the project should be cut off no lower than ground level to promote rapid re-growth. Access roads and work areas built over riparian vegetation should be covered by a sufficient layer of clean river run cobble to prevent damage to the underlying soil and root structure. The cobble should be removed upon completion of project activities.
- Drip pans should be placed under all vehicles and equipment placed on docks, barges, or other structures over water bodies when the vehicle or equipment is planned to be idle for more than 1 hour.
- Where possible, avoid or minimize diversion and encroachment impacts by scheduling construction during periods of low flow or when the stream is dry. Scheduling should also consider seasonal releases of water from dams, fish migration and spawning seasons, and water demands due to crop irrigation.
- Construct diversion structures with materials free of potential pollutants such as soil, silt, sand, clay, grease, or oil.

Temporary Diversions and Encroachments

- Construct diversion channels in accordance with EC-9, Earth Dikes and Drainage Swales.
- In high flow velocity areas, stabilize slopes of embankments and diversion ditches using an appropriate liner, in accordance with EC-7, Geotextiles and Mats, or use rock slope protection.
- Where appropriate, use natural streambed materials such as large cobbles and boulders for temporary embankment and slope protection, or other temporary soil stabilization methods.
- Provide for velocity dissipation at transitions in the diversion, such as the point where the stream is diverted to the channel and the point where the diverted stream is returned to its natural channel. See also EC-10, Velocity Dissipation Devices.

Temporary Dry Construction Areas

- When dewatering behind temporary structures to create a temporary dry construction area, such as cofferdams, pass pumped water through a sediment-settling device, such as a portable tank or settling basin, before returning water to the water body. See also NS-2, Dewatering Operations.

- Any substance used to assemble or maintain diversion structures, such as form oil, should be non-toxic and non-hazardous.

- Any material used to minimize seepage underneath diversion structures, such as grout, should be non-toxic, non-hazardous, and as close to a neutral pH as possible.

Comparison of Diversion and Isolation Techniques:

- Gravel bags are relatively inexpensive, but installation and removal can be labor intensive. It is also difficult to dewater the isolated area. Sandbags should not be used for this technique in rivers or streams, as sand should never be put into or adjacent to a stream, even if encapsulated in geotextile.

- Gravel Bag Berms (SE-6) used in conjunction with an impermeable membrane are cost effective, and can be dewatered relatively easily. If spawning gravel is used, the impermeable membrane can be removed from the stream, and the gravel can be spread out and left as salmonid spawning habitat if approved in the permit. Only clean, washed gravel should be used for both the gravel bag and gravel berm techniques.

- Cofferdams are relatively expensive, but frequently allow full dewatering. Also, many options now available are relatively easy to install.

- Sheet pile enclosures are a much more expensive solution, but do allow full dewatering. This technique is not well suited to small streams, but can be effective on large rivers or lakes, and where staging and heavy equipment access areas are available.

- K-rails are an isolation method that does not allow full dewatering, but can be used in small to large watercourses, and in fast-water situations.

- A relatively inexpensive isolation method is filter fabric isolation. This method involves placement of gravel bags or continuous berms to 'key-in' the fabric, and subsequently staking the fabric in place. This method should be used in relatively calm water, and can be used in smaller streams. Note that this is not a dewatering method, but rather a sediment isolation method.

- Turbidity curtains should be used where sediment discharge to a stream is unavoidable. They can also be used for in-stream construction, when dewatering an area is not required.

- When used in watercourses or streams, cofferdams must be used in accordance with permit requirements.

- Manufactured diversion structures should be installed following manufacturer's specifications.

- Filter fabric and turbidity curtain isolation installation methods can be found in the specific technique descriptions that follow.

Filter Fabric Isolation Technique

Definition and Purpose

A filter fabric isolation structure is a temporary structure built into a waterway to enclose a construction area and reduce sediment pollution from construction work in or adjacent to water. This structure is composed of filter fabric, gravel bags, and steel t-posts.

Appropriate Applications

- Filter fabric may be used for construction activities such as streambank stabilization, or culvert, bridge, pier or abutment installation. It may also be used in combination with other methods, such as clean water bypasses and/or pumps.
- Filter fabric isolation is relatively inexpensive. This method involves placement of gravel bags or continuous berms to 'key-in' the fabric, and subsequently staking the fabric in place.
- If spawning gravel is used, all other components of the isolation can be removed from the stream, and the gravel may be spread out and left as salmonid spawning habitat if approved in the permit. Whether spawning gravel or other types of gravel are used, only clean washed gravel should be used as infill for the gravel bags or continuous berm.
- This method should be used in relatively calm water, and can be used in smaller streams. This is not a dewatering method, but rather a sediment isolation method.
- Water levels inside and outside the fabric curtain must be about the same, as differential heads will cause the curtain to collapse.

Limitations

- Do not use if the installation, maintenance and removal of the structures will disturb sensitive aquatic species of concern.
- Filter fabrics are not appropriate for projects where dewatering is necessary.
- Filter fabrics are not appropriate to completely dam stream flow.

Design and Installation

- For the filter fabric isolation method, a non-woven or heavy-duty fabric is recommended over standard silt fence. Using rolled geotextiles allows non-standard widths to be used.
- Anchor filter fabric with gravel bags filled with clean, washed gravel. Do not use sand. If a bag should split open, the gravel can be left in the stream, where it can provide aquatic habitat benefits. If a sandbag splits open in a watercourse, the sand could cause a decrease in water quality, and could bury sensitive aquatic habitat.
- Another anchor alternative is a continuous berm, made with the Continuous Berm Machine. This is a gravel-filled bag that can be made in very long segments. The length of the berms is usually limited to 18 ft for ease of handling (otherwise, it gets too heavy to move).

- Place the fabric on the bottom of the stream, and place either a bag of clean, washed gravel or a continuous berm over the bottom of the silt fence fabric, such that a bag-width of fabric lies on the stream bottom. The bag should be placed on what will be the outside of the isolation area.
- Pull the fabric up, and place a metal t-post immediately behind the fabric, on the inside of the isolation area; attach the silt fence to the post with three diagonal nylon ties.
- Continue placing fabric as described above until the entire work area has been isolated, staking the fabric at least every 6 ft.

Inspection and Maintenance

- Immediately repair any gaps, holes or scour.
- Remove and properly dispose of sediment buildup.
- Remove BMP upon completion of construction activity. Recycle or reuse if applicable.
- Revegetate areas disturbed by BMP removal if needed.

Turbidity Curtain Isolation Technique

Definition and Purpose

A turbidity curtain is a fabric barrier used to isolate the near shore work area. The barriers are intended to confine the suspended sediment. The curtain is a floating barrier, and thus does not prevent water from entering the isolated area; rather, it prevents suspended sediment from getting out.

Appropriate Applications

Turbidity curtains should be used where sediment discharge to a stream is unavoidable. They are used when construction activities adjoin quiescent waters, such as lakes, ponds, and slow flowing rivers. The curtains are designed to deflect and contain sediment within a limited area and provide sufficient retention time so that the sediment particles will fall out of suspension.

Limitations

- Turbidity curtains should not be used in flowing water; they are best suited for use in ponds, lakes, and very slow-moving rivers.
- Turbidity curtains should not be placed across the width of a channel.
- Removing sediment that has been deflected and settled out by the curtain may create a discharge problem through the resuspension of particles and by accidental dumping by the removal equipment.

Design and Installation

- Turbidity curtains should be oriented parallel to the direction of flow.
- The curtain should extend the entire depth of the watercourse in calm-water situations.
- In wave conditions, the curtain should extend to within 1 ft of the bottom of the watercourse, such that the curtain does not stir up sediment by hitting the bottom repeatedly. If it is

desirable for the curtain to reach the bottom in an active-water situation, a pervious filter fabric may be used for the bottom 1 ft.

- The top of the curtain should consist of flexible flotation buoys, and the bottom should be held down by a load line incorporated into the curtain fabric. The fabric should be a brightly colored impervious mesh.
- The curtain should be held in place by anchors placed at least every 100 ft.
- First, place the anchors, then tow the fabric out in a furled condition, and connect to the anchors. The anchors should be connected to the flotation devices, and not to the bottom of the curtain. Once in place, cut the furling lines, and allow the bottom of the curtain to sink.
- Consideration must be given to the probable outcome of the removal procedure. It must be determined if it will create more of a sediment problem through re-suspension of the particles or by accidental dumping of material during removal. It is recommended that the soil particles trapped by the turbidity curtain only be removed if there has been a significant change in the original contours of the affected area in the watercourse.
- Particles should always be allowed to settle for a minimum of 6 to 12 hours prior to their removal or prior to removal of the turbidity curtain.

Maintenance and Inspection:

- The curtain should be inspected for holes or other problems, and any repairs needed should be made promptly.
- Allow sediment to settle for 6 to 12 hours prior to removal of sediment or curtain. This means that after removing sediment, wait an additional 6 to 12 hours before removing the curtain.
- To remove, install furling lines along the curtain, detach from anchors, and tow out of the water.

K-rail River Isolation

Definition and Purpose

This temporary sediment control or stream isolation method uses K-rails to form the sediment deposition area, or to isolate the in-stream or near-bank construction area.

Barriers are placed end-to-end in a pre-designed configuration and gravel-filled bags are used at the toe of the barrier and at their abutting ends to seal and prevent movement of sediment beneath or through the barrier walls.

Appropriate Applications

The K-rail isolation can be used in streams with higher water velocities than many other isolation techniques.

- This technique is also useful at the toe of embankments, and cut or fill slopes.

Limitations

- The K-rail method should not be used to dewater a project site, as the barrier is not watertight.

Design and Installation

- To create a floor for the K-rail, move large rocks and obstructions. Place washed gravel and gravel-filled bags to create a level surface for K-rails to sit. Washed gravel should always be used.
- Place the bottom two K-rails adjacent to each other, and parallel to the direction of flow; fill the center portion with gravel bags. Then place the third K-rail on top of the bottom two. There should be sufficient gravel bags between the bottom K-rails such that the top rail is supported by the gravel. Place plastic sheeting around the K-rails, and secure at the bottom with gravel bags.
- Further support can be added by pinning and cabling the K-rails together. Also, large riprap and boulders can be used to support either side of the K-rail, especially where there is strong current.

Inspection and Maintenance:

- The barrier should be inspected and any leaks, holes, or other problems should be addressed immediately.
- Sediment should be allowed to settle for at least 6 to 12 hours prior to removal of sediment, and for 6 to 12 hours prior to removal of the barrier.

Stream Diversions

The selection of which stream diversion technique to use will depend upon the type of work involved, physical characteristics of the site, and the volume of water flowing through the project.

Advantages of a Pumped Diversion

- Downstream sediment transport can be nearly eliminated.
- Dewatering of the work area is possible.
- Pipes can be moved around to allow construction operations.
- The dams can serve as temporary access to the site.
- Increased flows can be managed by adding more pumping capacity.

Disadvantages of a Pumped Diversion

- Flow volume is limited by pump capacity.
- A pumped diversion requires 24 hour monitoring of pumps.
- Sudden rain could overtop dams.
- Erosion at the outlet.

- Minor in-stream disturbance is required to install and remove dams.

Advantages of Excavated Channels and Flumes

- Excavated channels isolate work from water flow and allow dewatering.
- Excavated channels can handle larger flows than pumps.

Disadvantages of Excavated Channels and Flumes

- Bypass channel or flume must be sized to handle flows, including possible floods.
- Channels must be protected from erosion.
- Flow diversion and re-direction with small dams involves in-stream disturbance and mobilization of sediment.

Design and Installation

- Installation guidelines will vary based on existing site conditions and type of diversion used.
- Pump capacity must be sufficient for design flow.
- A standby pump is required in case a primary pump fails.
- Dam materials used to create dams upstream and downstream of diversion should be erosion resistant; materials such as steel plate, sheet pile, sandbags, continuous berms, inflatable water bladders, etc., would be acceptable.

When constructing a diversion channel, begin excavation of the channel at the proposed downstream end, and work upstream. Once the watercourse to be diverted is reached and the excavated channel is stable, breach the upstream end and allow water to flow down the new channel. Once flow has been established in the diversion channel, install the diversion weir in the main channel; this will force all water to be diverted from the main channel.

Inspection and Maintenance

- Pumped diversions require 24 hour monitoring of pumps.
- Inspect embankments and diversion channels for damage to the linings, accumulating debris, sediment buildup, and adequacy of the slope protection. Remove debris and repair linings and slope protection as required. Remove holes, gaps, or scour.
- Upon completion of work, the diversion or isolation structure should be removed and flow should be redirected through the new culvert or back into the original stream channel. Recycle or reuse if applicable.
- Revegetate areas disturbed by BMP removal if needed.

Costs

Costs of clear water diversion vary considerably and can be very high.

Inspection and Maintenance

- Inspect and verify that activity-based BMPs are in place prior to the commencement of associated activities. While activities associated with the BMP are under way, inspect weekly during the rainy season and at two-week intervals in the non-rainy season to verify continued BMP implementation.
- Inspect BMPs subject to non-stormwater discharges daily while non-stormwater discharges occur.
- Refer to BMP-specific inspection and maintenance requirements.

References

California Bank and Shore Rock Slope Protection Design – Practitioners Guide and Field Evaluations of Riprap Methods, Caltrans Study No. F90TL03, October, 2000.

Stormwater Quality Handbooks - Construction Site Best Management Practices (BMPs) Manual, State of California Department of Transportation (Caltrans), November 2000.

Illicit Connection/Discharge NS-6

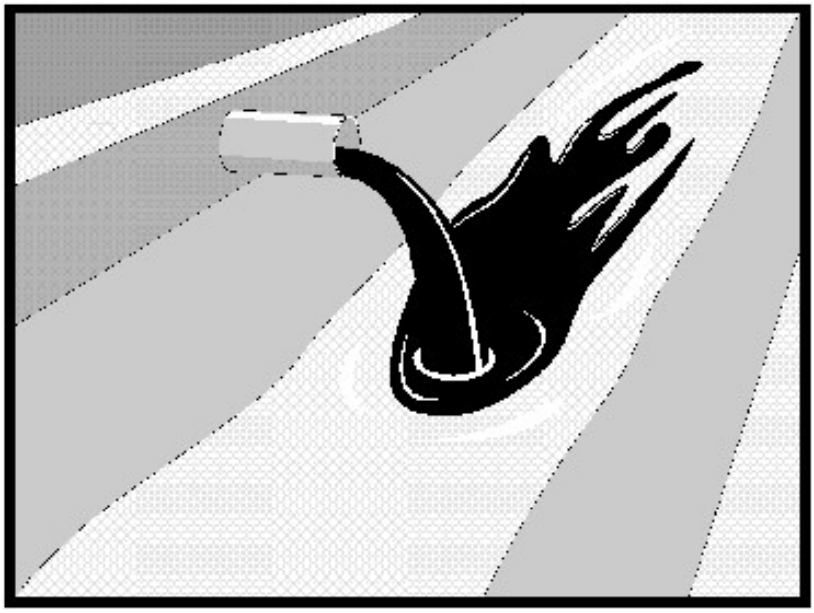

Categories		
EC	Erosion Control	
SE	Sediment Control	
TC	Tracking Control	
WE	Wind Erosion Control	
NS	Non-Stormwater Management Control	☑
WM	Waste Management and Materials Pollution Control	

Legend:

☑ **Primary Objective**

☒ **Secondary Objective**

Targeted Constituents	
Sediment	
Nutrients	☑
Trash	☑
Metals	☑
Bacteria	☑
Oil and Grease	☑
Organics	☑

Potential Alternatives

None

Description and Purpose

Procedures and practices designed for construction contractors to recognize illicit connections or illegally dumped or discharged materials on a construction site and report incidents.

Suitable Applications

This best management practice (BMP) applies to all construction projects. Illicit connection/discharge and reporting is applicable anytime an illicit connection or discharge is discovered or illegally dumped material is found on the construction site.

Limitations

Illicit connections and illegal discharges or dumping, for the purposes of this BMP, refer to discharges and dumping caused by parties other than the contractor. If pre-existing hazardous materials or wastes are known to exist onsite, they should be identified in the SWPPP and handled as set forth in the SWPPP.

Implementation

Planning

- Review the SWPPP. Pre-existing areas of contamination should be identified and documented in the SWPPP.
- Inspect site before beginning the job for evidence of illicit connections, illegal dumping or discharges. Document any pre-existing conditions and notify the owner.
- Inspect site regularly during project execution for evidence

of illicit connections, illegal dumping or discharges.

- Observe site perimeter for evidence for potential of illicitly discharged or illegally dumped material, which may enter the job site.

Identification of Illicit Connections and Illegal Dumping or Discharges

- **General –** unlabeled and unidentifiable material should be treated as hazardous.
- **Solids** - Look for debris, or rubbish piles. Solid waste dumping often occurs on roadways with light traffic loads or in areas not easily visible from the traveled way.
- **Liquids** - signs of illegal liquid dumping or discharge can include:
  - Visible signs of staining or unusual colors to the pavement or surrounding adjacent soils
  - Pungent odors coming from the drainage systems
  - Discoloration or oily substances in the water or stains and residues detained within ditches, channels or drain boxes
  - Abnormal water flow during the dry weather season
- **Urban Areas** - Evidence of illicit connections or illegal discharges is typically detected at storm drain outfall locations or at manholes. Signs of an illicit connection or illegal discharge can include:
  - Abnormal water flow during the dry weather season
  - Unusual flows in sub drain systems used for dewatering
  - Pungent odors coming from the drainage systems
  - Discoloration or oily substances in the water or stains and residues detained within ditches, channels or drain boxes
  - Excessive sediment deposits, particularly adjacent to or near active offsite construction projects
- **Rural Areas** - Illicit connections or illegal discharges involving irrigation drainage ditches are detected by visual inspections. Signs of an illicit discharge can include:
  - Abnormal water flow during the non-irrigation season
  - Non-standard junction structures
  - Broken concrete or other disturbances at or near junction structures

Reporting

Notify the owner of any illicit connections and illegal dumping or discharge incidents at the time of discovery. For illicit connections or discharges to the storm drain system, notify the local stormwater management agency. For illegal dumping, notify the local law enforcement agency.

Cleanup and Removal

The responsibility for cleanup and removal of illicit or illegal dumping or discharges will vary by location. Contact the local stormwater management agency for further information.

Costs

Costs to look for and report illicit connections and illegal discharges and dumping are low. The best way to avoid costs associated with illicit connections and illegal discharges and dumping is to keep the project perimeters secure to prevent access to the site, to observe the site for vehicles that should not be there, and to document any waste or hazardous materials that exist onsite before taking possession of the site.

Inspection and Maintenance

- Inspect and verify that activity-based BMPs are in place prior to the commencement of associated activities. While activities associated with the BMP are under way, inspect weekly during the rainy season and at two-week intervals in the non-rainy season to verify continued BMP implementation.
- Inspect the site regularly to check for any illegal dumping or discharge.
- Prohibit employees and subcontractors from disposing of non-job related debris or materials at the construction site.
- Notify the owner of any illicit connections and illegal dumping or discharge incidents at the time of discovery.

References

Blueprint for a Clean Bay: Best Management Practices to Prevent Stormwater Pollution from Construction Related Activities; Santa Clara Valley Nonpoint Source Pollution Control Program, 1995.

Stormwater Quality Handbooks - Construction Site Best Management Practices (BMPs) Manual, State of California Department of Transportation (Caltrans), November 2000.

Stormwater Management for Construction Activities, Developing Pollution Prevention Plans and Best Management Practices, EPA 832-R-92005; USEPA, April 1992.

Potable Water/Irrigation NS-7

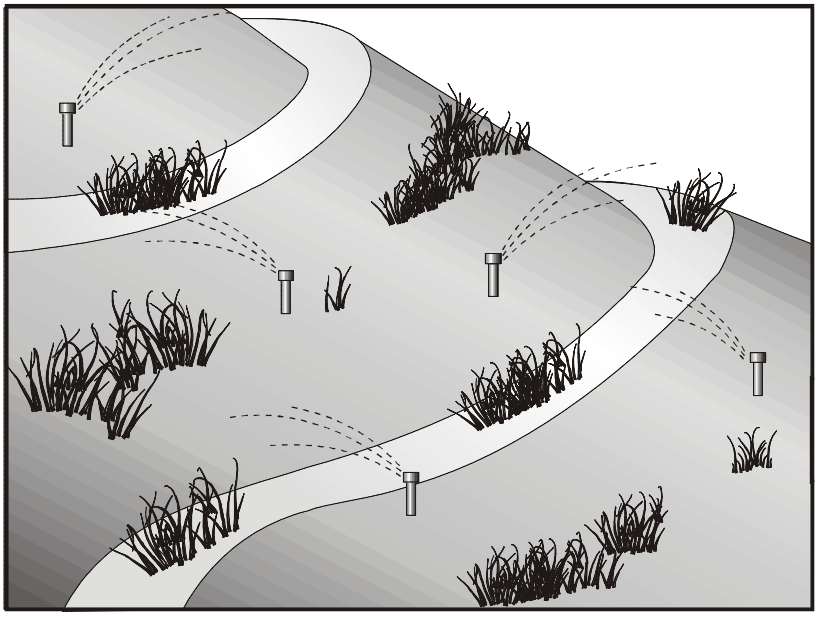

Categories

EC	Erosion Control	
SE	Sediment Control	
TC	Tracking Control	
WE	Wind Erosion Control	
NS	Non-Stormwater Management Control	☑
WM	Waste Management and Materials Pollution Control	

Legend:

☑ **Primary Objective**

☒ **Secondary Objective**

Targeted Constituents

Sediment	☑
Nutrients	☑
Trash	
Metals	☑
Bacteria	
Oil and Grease	
Organics	☑

Potential Alternatives

None

Description and Purpose

Potable Water/Irrigation consists of practices and procedures to manage the discharge of potential pollutants generated during discharges from irrigation water lines, landscape irrigation, lawn or garden watering, planned and unplanned discharges from potable water sources, water line flushing, and hydrant flushing.

Suitable Applications

Implement this BMP whenever potable water or irrigation water discharges occur at or enter a construction site.

Limitations

None identified.

Implementation

- Direct water from offsite sources around or through a construction site, where feasible, in a way that minimizes contact with the construction site.
- Discharges from water line flushing should be reused for landscaping purposes where feasible.
- Shut off the water source to broken lines, sprinklers, or valves as soon as possible to prevent excess water flow.
- Protect downstream stormwater drainage systems and watercourses from water pumped or bailed from trenches excavated to repair water lines.
- Inspect irrigated areas within the construction limits for

excess watering. Adjust watering times and schedules to ensure that the appropriate amount of water is being used and to minimize runoff. Consider factors such as soil structure, grade, time of year, and type of plant material in determining the proper amounts of water for a specific area.

Costs

Cost to manage potable water and irrigation are low and generally considered to be a normal part of related activities.

Inspection and Maintenance

- Inspect and verify that activity-based BMPs are in place prior to the commencement of associated activities. While activities associated with the BMP are under way, inspect weekly during the rainy season and at two-week intervals in the non-rainy season to verify continued BMP implementation.
- Inspect BMPs subject to non-stormwater discharges daily while non-stormwater discharges occur.
- Repair broken water lines as soon as possible.
- Inspect irrigated areas regularly for signs of erosion and/or discharge.

References

Blueprint for a Clean Bay: Best Management Practices to Prevent Stormwater Pollution from Construction Related Activities; Santa Clara Valley Nonpoint Source Pollution Control Program, 1995.

Stormwater Quality Handbooks - Construction Site Best Management Practices (BMPs) Manual, State of California Department of Transportation (Caltrans), November 2000.

Stormwater Management for Construction Activities, Developing Pollution Prevention Plans and Best Management Practices, EPA 832-R-92005; USEPA, April 1992.

Vehicle and Equipment Cleaning NS-8

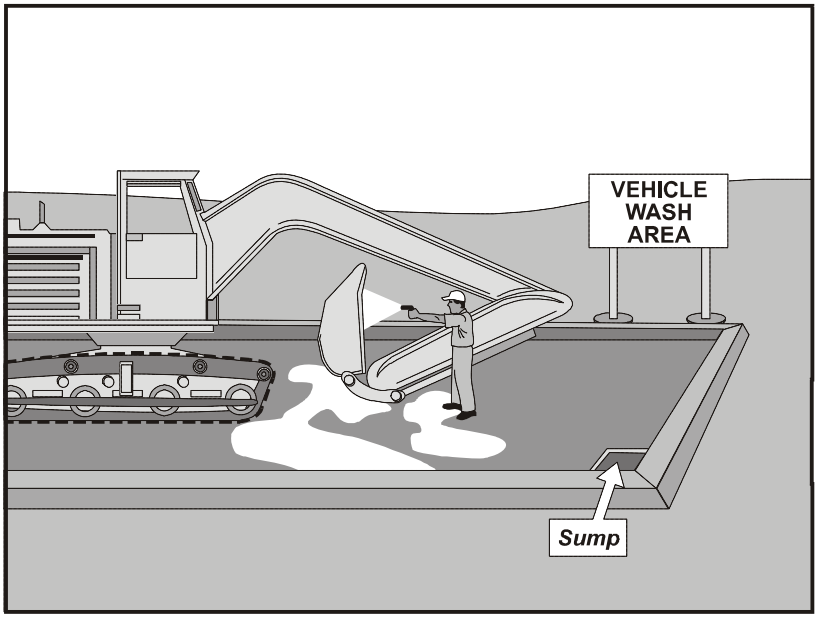

Categories		
EC	Erosion Control	
SE	Sediment Control	
TC	Tracking Control	
WE	Wind Erosion Control	
NS	Non-Stormwater Management Control	☑
WM	Waste Management and Materials Pollution Control	

Legend:
☑ **Primary Objective**
☒ **Secondary Objective**

Targeted Constituents	
Sediment	☑
Nutrients	☑
Trash	
Metals	
Bacteria	
Oil and Grease	☑
Organics	☑

Potential Alternatives

None

Description and Purpose

Vehicle and equipment cleaning procedures and practices eliminate or reduce the discharge of pollutants to stormwater from vehicle and equipment cleaning operations. Procedures and practices include but are not limited to: using offsite facilities; washing in designated, contained areas only; eliminating discharges to the storm drain by infiltrating the wash water; and training employees and subcontractors in proper cleaning procedures.

Suitable Applications

These procedures are suitable on all construction sites where vehicle and equipment cleaning is performed.

Limitations

Even phosphate-free, biodegradable soaps have been shown to be toxic to fish before the soap degrades. Sending vehicles/equipment offsite should be done in conjunction with TC-1, Stabilized Construction Entrance/Exit.

Implementation

Other options to washing equipment onsite include contracting with either an offsite or mobile commercial washing business. These businesses may be better equipped to handle and dispose of the wash waters properly. Performing this work offsite can also be economical by eliminating the need for a separate washing operation onsite.

If washing operations are to take place onsite, then:

- Use phosphate-free, biodegradable soaps.
- Educate employees and subcontractors on pollution prevention measures.
- Do not permit steam cleaning onsite. Steam cleaning can generate significant pollutant concentrates.
- Cleaning of vehicles and equipment with soap, solvents or steam should not occur on the project site unless resulting wastes are fully contained and disposed of. Resulting wastes should not be discharged or buried, and must be captured and recycled or disposed according to the requirements of WM-10, Liquid Waste Management or WM-6, Hazardous Waste Management, depending on the waste characteristics. Minimize use of solvents. Use of diesel for vehicle and equipment cleaning is prohibited.
- All vehicles and equipment that regularly enter and leave the construction site must be cleaned offsite.
- When vehicle and equipment washing and cleaning must occur onsite, and the operation cannot be located within a structure or building equipped with appropriate disposal facilities, the outside cleaning area should have the following characteristics:
  - Located away from storm drain inlets, drainage facilities, or watercourses
  - Paved with concrete or asphalt and bermed to contain wash waters and to prevent runon and runoff
  - Configured with a sump to allow collection and disposal of wash water
  - No discharge of wash waters to storm drains or watercourses
  - Used only when necessary
- When cleaning vehicles and equipment with water:
  - Use as little water as possible. High-pressure sprayers may use less water than a hose and should be considered
  - Use positive shutoff valve to minimize water usage
  - Facility wash racks should discharge to a sanitary sewer, recycle system or other approved discharge system and must not discharge to the storm drainage system, watercourses, or to groundwater

Costs

Cleaning vehicles and equipment at an offsite facility may reduce overall costs for vehicle and equipment cleaning by eliminating the need to provide similar services onsite. When onsite cleaning is needed, the cost to establish appropriate facilities is relatively low on larger, long-duration projects, and moderate to high on small, short-duration projects.

Inspection and Maintenance

- Inspect and verify that activity-based BMPs are in place prior to the commencement of associated activities. While activities associated with the BMP are under way, inspect weekly during the rainy season and at two-week intervals in the non-rainy season to verify continued BMP implementation.
- Inspect BMPs subject to non-stormwater discharges daily while non-stormwater discharges occur.
- Inspection and maintenance is minimal, although some berm repair may be necessary.
- Monitor employees and subcontractors throughout the duration of the construction project to ensure appropriate practices are being implemented.
- Inspect sump regularly and remove liquids and sediment as needed.
- Prohibit employees and subcontractors from washing personal vehicles and equipment on the construction site.

References

Stormwater Quality Handbooks - Construction Site Best Management Practices (BMPs) Manual, State of California Department of Transportation (Caltrans), November 2000.

Swisher, R.D. Surfactant Biodegradation, Marcel Decker Corporation, 1987.

Vehicle and Equipment Fueling NS-9

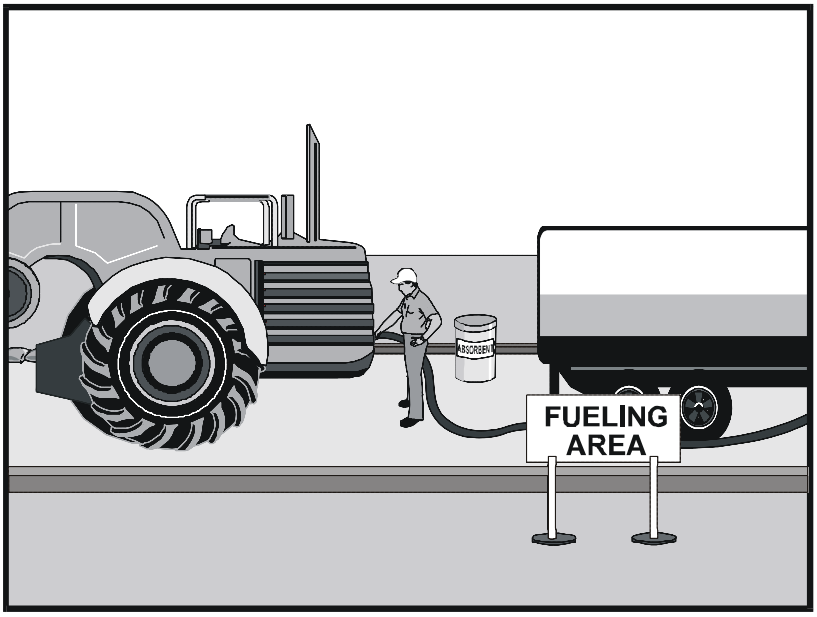

Categories

EC	Erosion Control	
SE	Sediment Control	
TC	Tracking Control	
WE	Wind Erosion Control	
NS	Non-Stormwater Management Control	☑
WM	Waste Management and Materials Pollution Control	

Legend:

☑ **Primary Objective**

☒ **Secondary Objective**

Targeted Constituents

Sediment	
Nutrients	
Trash	
Metals	
Bacteria	
Oil and Grease	☑
Organics	

Potential Alternatives

None

Description and Purpose

Vehicle equipment fueling procedures and practices are designed to prevent fuel spills and leaks, and reduce or eliminate contamination of stormwater. This can be accomplished by using offsite facilities, fueling in designated areas only, enclosing or covering stored fuel, implementing spill controls, and training employees and subcontractors in proper fueling procedures.

Suitable Applications

These procedures are suitable on all construction sites where vehicle and equipment fueling takes place.

Limitations

Onsite vehicle and equipment fueling should only be used where it is impractical to send vehicles and equipment offsite for fueling. Sending vehicles and equipment offsite should be done in conjunction with TC-1, Stabilized Construction Entrance/ Exit.

Implementation

- Use offsite fueling stations as much as possible. These businesses are better equipped to handle fuel and spills properly. Performing this work offsite can also be economical by eliminating the need for a separate fueling area at a site.
- Discourage "topping-off" of fuel tanks.
- Absorbent spill cleanup materials and spill kits should be available in fueling areas and on fueling trucks, and should

be disposed of properly after use.

- Drip pans or absorbent pads should be used during vehicle and equipment fueling, unless the fueling is performed over an impermeable surface in a dedicated fueling area.
- Use absorbent materials on small spills. Do not hose down or bury the spill. Remove the adsorbent materials promptly and dispose of properly.
- Avoid mobile fueling of mobile construction equipment around the site; rather, transport the equipment to designated fueling areas. With the exception of tracked equipment such as bulldozers and large excavators, most vehicles should be able to travel to a designated area with little lost time.
- Train employees and subcontractors in proper fueling and cleanup procedures.
- When fueling must take place onsite, designate an area away from drainage courses to be used. Fueling areas should be identified in the SWPPP.
- Dedicated fueling areas should be protected from stormwater runon and runoff, and should be located at least 50 ft away from downstream drainage facilities and watercourses. Fueling must be performed on level-grade areas.
- Protect fueling areas with berms and dikes to prevent runon, runoff, and to contain spills.
- Nozzles used in vehicle and equipment fueling should be equipped with an automatic shutoff to control drips. Fueling operations should not be left unattended.
- Use vapor recovery nozzles to help control drips as well as air pollution where required by Air Quality Management Districts (AQMD).
- Federal, state, and local requirements should be observed for any stationary above ground storage tanks.

Costs

- All of the above measures are low cost except for the capital costs of above ground tanks that meet all local environmental, zoning, and fire codes.

Inspection and Maintenance

- Vehicles and equipment should be inspected each day of use for leaks. Leaks should be repaired immediately or problem vehicles or equipment should be removed from the project site.
- Keep ample supplies of spill cleanup materials onsite.
- Immediately clean up spills and properly dispose of contaminated soil and cleanup materials.

References

Blueprint for a Clean Bay: Best Management Practices to Prevent Stormwater Pollution from Construction Related Activities; Santa Clara Valley Nonpoint Source Pollution Control Program, 1995.

Coastal Nonpoint Pollution Control Program: Program Development and Approval Guidance, Working Group Working Paper; USEPA, April 1992.

Stormwater Quality Handbooks - Construction Site Best Management Practices (BMPs) Manual, State of California Department of Transportation (Caltrans), November 2000.

Stormwater Management for Construction Activities, Developing Pollution Prevention Plans and Best Management Practices, EPA 832-R-92005; USEPA, April 1992.

Vehicle & Equipment Maintenance NS-10

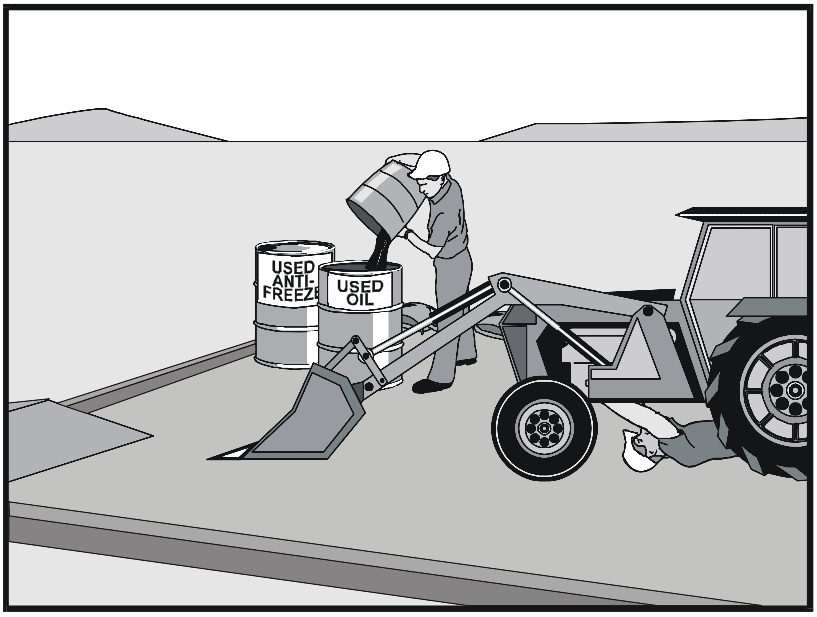

Categories		
EC	Erosion Control	
SE	Sediment Control	
TC	Tracking Control	
WE	Wind Erosion Control	
NS	Non-Stormwater Management Control	☑
WM	Waste Management and Materials Pollution Control	

Legend:
☑ **Primary Objective**
☒ **Secondary Objective**

Targeted Constituents	
Sediment	
Nutrients	☑
Trash	☑
Metals	
Bacteria	
Oil and Grease	☑
Organics	☑

Potential Alternatives

None

Description and Purpose

Prevent or reduce the contamination of stormwater resulting from vehicle and equipment maintenance by running a "dry and clean site". The best option would be to perform maintenance activities at an offsite facility. If this option is not available then work should be performed in designated areas only, while providing cover for materials stored outside, checking for leaks and spills, and containing and cleaning up spills immediately. Employees and subcontractors must be trained in proper procedures.

Suitable Applications

These procedures are suitable on all construction projects where an onsite yard area is necessary for storage and maintenance of heavy equipment and vehicles.

Limitations

Onsite vehicle and equipment maintenance should only be used where it is impractical to send vehicles and equipment offsite for maintenance and repair. Sending vehicles/equipment offsite should be done in conjunction with TC-1, Stabilized Construction Entrance/Exit.

Outdoor vehicle or equipment maintenance is a potentially significant source of stormwater pollution. Activities that can contaminate stormwater include engine repair and service, changing or replacement of fluids, and outdoor equipment storage and parking (engine fluid leaks). For further information on vehicle or equipment servicing, see NS-8, Vehicle and Equipment Cleaning, and NS-9, Vehicle and

Equipment Fueling.

Implementation

- Use offsite repair shops as much as possible. These businesses are better equipped to handle vehicle fluids and spills properly. Performing this work offsite can also be economical by eliminating the need for a separate maintenance area.
- If maintenance must occur onsite, use designated areas, located away from drainage courses. Dedicated maintenance areas should be protected from stormwater runon and runoff, and should be located at least 50 ft from downstream drainage facilities and watercourses.
- Drip pans or absorbent pads should be used during vehicle and equipment maintenance work that involves fluids, unless the maintenance work is performed over an impermeable surface in a dedicated maintenance area.
- Place a stockpile of spill cleanup materials where it will be readily accessible.
- All fueling trucks and fueling areas are required to have spill kits and/or use other spill protection devices.
- Use adsorbent materials on small spills. Remove the absorbent materials promptly and dispose of properly.
- Inspect onsite vehicles and equipment daily at startup for leaks, and repair immediately.
- Keep vehicles and equipment clean; do not allow excessive build-up of oil and grease.
- Segregate and recycle wastes, such as greases, used oil or oil filters, antifreeze, cleaning solutions, automotive batteries, hydraulic and transmission fluids. Provide secondary containment and covers for these materials if stored onsite.
- Train employees and subcontractors in proper maintenance and spill cleanup procedures.
- Drip pans or plastic sheeting should be placed under all vehicles and equipment placed on docks, barges, or other structures over water bodies when the vehicle or equipment is planned to be idle for more than 1 hour.
- For long-term projects, consider using portable tents or covers over maintenance areas if maintenance cannot be performed offsite.
- Consider use of new, alternative greases and lubricants, such as adhesive greases, for chassis lubrication and fifth-wheel lubrication.
- Properly dispose of used oils, fluids, lubricants, and spill cleanup materials.
- Do not place used oil in a dumpster or pour into a storm drain or watercourse.
- Properly dispose of or recycle used batteries.
- Do not bury used tires.

- Repair leaks of fluids and oil immediately.

Listed below is further information if you must perform vehicle or equipment maintenance onsite.

Safer Alternative Products

- Consider products that are less toxic or hazardous than regular products. These products are often sold under an "environmentally friendly" label.
- Consider use of grease substitutes for lubrication of truck fifth-wheels. Follow manufacturers label for details on specific uses.
- Consider use of plastic friction plates on truck fifth-wheels in lieu of grease. Follow manufacturers label for details on specific uses.

Waste Reduction

Parts are often cleaned using solvents such as trichloroethylene, trichloroethane, or methylene chloride. Many of these cleaners are listed in California Toxic Rule as priority pollutants. These materials are harmful and must not contaminate stormwater. They must be disposed of as a hazardous waste. Reducing the number of solvents makes recycling easier and reduces hazardous waste management costs. Often, one solvent can perform a job as well as two different solvents. Also, if possible, eliminate or reduce the amount of hazardous materials and waste by substituting non-hazardous or less hazardous materials. For example, replace chlorinated organic solvents with non-chlorinated solvents. Non-chlorinated solvents like kerosene or mineral spirits are less toxic and less expensive to dispose of properly. Check the list of active ingredients to see whether it contains chlorinated solvents. The "chlor" term indicates that the solvent is chlorinated. Also, try substituting a wire brush for solvents to clean parts.

Recycling and Disposal

Separating wastes allows for easier recycling and may reduce disposal costs. Keep hazardous wastes separate, do not mix used oil solvents, and keep chlorinated solvents (like,-trichloroethane) separate from non-chlorinated solvents (like kerosene and mineral spirits). Promptly transfer used fluids to the proper waste or recycling drums. Don't leave full drip pans or other open containers lying around. Provide cover and secondary containment until these materials can be removed from the site.

Oil filters can be recycled. Ask your oil supplier or recycler about recycling oil filters.

Do not dispose of extra paints and coatings by dumping liquid onto the ground or throwing it into dumpsters. Allow coatings to dry or harden before disposal into covered dumpsters.

Store cracked batteries in a non-leaking secondary container. Do this with all cracked batteries, even if you think all the acid has drained out. If you drop a battery, treat it as if it is cracked. Put it into the containment area until you are sure it is not leaking.

Costs

All of the above are low cost measures. Higher costs are incurred to setup and maintain onsite maintenance areas.

Inspection and Maintenance

- Inspect and verify that activity-based BMPs are in place prior to the commencement of associated activities. While activities associated with the BMP are under way, inspect weekly during the rainy season and at two-week intervals in the non-rainy season to verify continued BMP implementation.
- Inspect BMPs subject to non-stormwater discharges daily while non-stormwater discharges occur.
- Keep ample supplies of spill cleanup materials onsite.
- Maintain waste fluid containers in leak proof condition.
- Vehicles and equipment should be inspected on each day of use. Leaks should be repaired immediately or the problem vehicle(s) or equipment should be removed from the project site.
- Inspect equipment for damaged hoses and leaky gaskets routinely. Repair or replace as needed.

References

Blueprint for a Clean Bay: Best Management Practices to Prevent Stormwater Pollution from Construction Related Activities; Santa Clara Valley Nonpoint Source Pollution Control Program, 1995.

Coastal Nonpoint Pollution Control Program; Program Development and Approval Guidance, Working Group, Working Paper; USEPA, April 1992.

Stormwater Quality Handbooks - Construction Site Best Management Practices (BMPs) Manual, State of California Department of Transportation (Caltrans), November 2000.

Pile Driving Operations NS-11

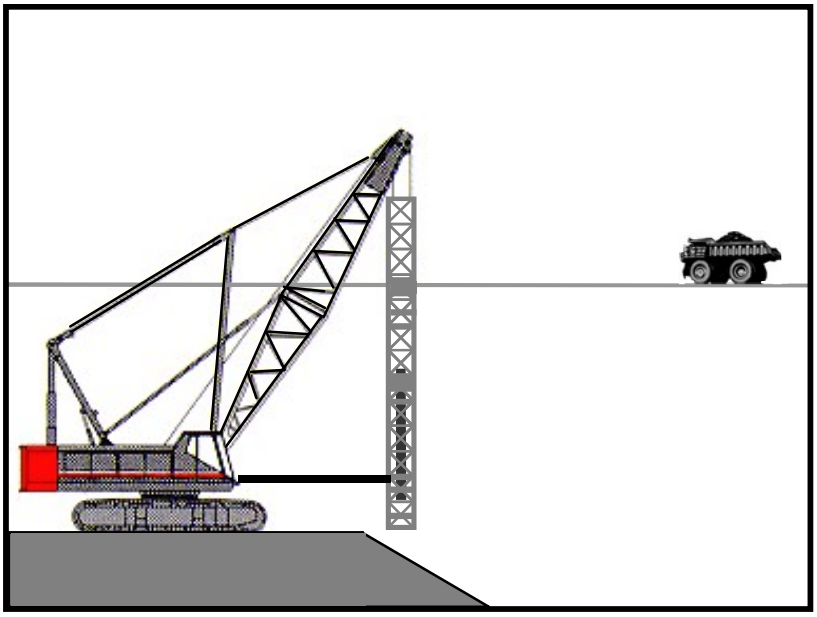

Categories

EC	Erosion Control	
SE	Sediment Control	
TC	Tracking Control	
WE	Wind Erosion Control	
NS	Non-Stormwater Management Control	☑
WM	Waste Management and Materials Pollution Control	

Legend:

☑ **Primary Objective**

☒ **Secondary Objective**

Targeted Constituents

Sediment	☑
Nutrients	
Trash	
Metals	
Bacteria	
Oil and Grease	☑
Organics	

Potential Alternatives

None

Description and Purpose

The construction and retrofit of bridges and retaining walls often include driving piles for foundation support and shoring operations. Driven piles are typically constructed of precast concrete, steel, or timber. Driven sheet piles are also used for shoring and cofferdam construction. Proper control and use of equipment, materials, and waste products from pile driving operations will reduce or eliminate the discharge of potential pollutants to the storm drain system, watercourses, and waters of the United States.

Suitable Applications

These procedures apply to all construction sites near or adjacent to a watercourse or groundwater where permanent and temporary pile driving (impact and vibratory) takes place, including operations using pile shells as well as construction of cast-in-steel-shell and cast-in-drilled-hole piles.

Limitations

None identified.

Implementation

- Use drip pans or absorbent pads during vehicle and equipment operation, maintenance, cleaning, fueling, and storage. Refer to NS-8, Vehicle and Equipment Cleaning, NS-9, Vehicle and Equipment Fueling, and NS-10, Vehicle and Equipment Maintenance.

- Have spill kits and cleanup materials available at all locations of pile driving. Refer to WM-4, Spill Prevention

and Control.

- Equipment that is stored or in use in streambeds, or on docks, barges, or other structures over water bodies should be kept leak free.
- Park equipment over plastic sheeting or equivalent where possible. Plastic is not a substitute for drip pans or absorbent pads. The storage or use of equipment in streambeds or other bodies of water must comply with all applicable permits.
- Implement other BMPs as applicable, such as NS-2, Dewatering Operations, WM-5, Solid Waste Management, WM-6, Hazardous Waste Management, and WM-10, Liquid Waste Management.
- When not in use, store pile-driving equipment away from concentrated flows of stormwater, drainage courses, and inlets. Protect hammers and other hydraulic attachments from runon and runoff by placing them on plywood and covering them with plastic or a comparable material prior to the onset of rain.
- Use less hazardous products, e.g., vegetable oil, when practicable.

Costs

All of the above measures can be low cost.

Inspection and Maintenance

- Inspect and verify that activity-based BMPs are in place prior to the commencement of associated activities. While activities associated with the BMP are under way, inspect weekly during the rainy season and at two-week intervals in the non-rainy season to verify continued BMP implementation.
- Inspect BMPs subject to non-stormwater discharges daily while non-stormwater discharges occur.
- Inspect equipment every day at startup and repair equipment as needed (i.e., worn or damaged hoses, fittings, and gaskets). Recheck equipment at shift changes or at the end of the day and scheduled repairs as needed.

References

Stormwater Quality Handbooks - Construction Site Best Management Practices (BMPs) Manual, State of California Department of Transportation (Caltrans), November 2000.

Stormwater Management for Construction Activities, Developing Pollution Prevention Plans and Best Management Practices, EPA 832-R-92005; USEPA, April 1992.

Concrete Curing NS-12

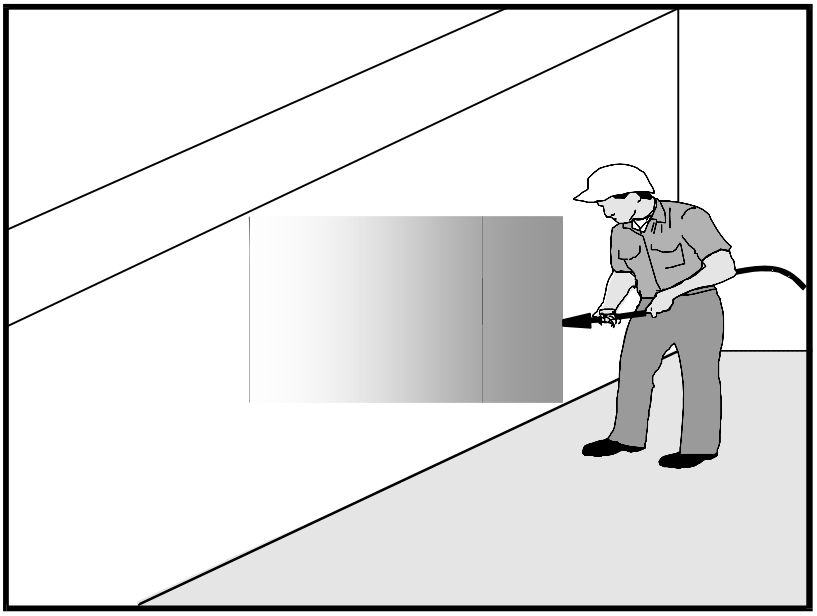

Categories		
EC	Erosion Control	
SE	Sediment Control	
TC	Tracking Control	
WE	Wind Erosion Control	
NS	Non-Stormwater Management Control	☑
WM	Waste Management and Materials Pollution Control	☑

Legend:

☑ **Primary Category**

☒ **Secondary Category**

Targeted Constituents	
Sediment	☑
Nutrients	
Trash	
Metals	☑
Bacteria	
Oil and Grease	☑
Organics	

Potential Alternatives

None

Description and Purpose

Concrete curing is used in the construction of structures such as bridges, retaining walls, pump houses, large slabs, and structured foundations. Concrete curing includes the use of both chemical and water methods.

Concrete and its associated curing materials have basic chemical properties that can raise the pH of water to levels outside of the permitted range. Discharges of stormwater and non-stormwater exposed to concrete during curing may have a high pH and may contain chemicals, metals, and fines. The General Permit incorporates Numeric Effluent Limits (NEL) and Numeric Action Levels (NAL) for pH (see Section 2 of this handbook to determine your project's risk level and if you are subject to these requirements).

Proper procedures and care should be taken when managing concrete curing materials to prevent them from coming into contact with stormwater flows, which could result in a high pH discharge.

Suitable Applications

Suitable applications include all projects where Portland Cement Concrete (PCC) and concrete curing chemicals are placed where they can be exposed to rainfall, runoff from other areas, or where runoff from the PCC will leave the site.

Limitations

- Runoff contact with concrete waste can raise pH levels in the water to environmentally harmful levels and trigger permit violations.

Implementation

Chemical Curing

- Avoid over spray of curing compounds.
- Minimize the drift by applying the curing compound close to the concrete surface. Apply an amount of compound that covers the surface, but does not allow any runoff of the compound.
- Use proper storage and handling techniques for concrete curing compounds. Refer to WM-1, Material Delivery and Storage.
- Protect drain inlets prior to the application of curing compounds.
- Refer to WM-4, Spill Prevention and Control.

Water Curing for Bridge Decks, Retaining Walls, and other Structures

- Direct cure water away from inlets and watercourses to collection areas for evaporation or other means of removal in accordance with all applicable permits. See WM-8 Concrete Waste Management.
- Collect cure water at the top of slopes and transport to a concrete waste management area in a non-erosive manner. See EC-9 Earth Dikes and Drainage Swales, EC-10, Velocity Dissipation Devices, and EC-11, Slope Drains.
- Utilize wet blankets or a similar method that maintains moisture while minimizing the use and possible discharge of water.

Education

- Educate employees, subcontractors, and suppliers on proper concrete curing techniques to prevent contact with discharge as described herein.
- Arrange for the QSP or the appropriately trained contractor's superintendent or representative to oversee and enforce concrete curing procedures.

Costs

All of the above measures are generally low cost.

Inspection and Maintenance

- Inspect and verify that activity-based BMPs are in place prior to the commencement of associated activities.
- BMPs must be inspected in accordance with General Permit requirements for the associated project type and risk level. It is recommended that at a minimum, BMPs be inspected weekly, prior to forecasted rain events, daily during extended rain events, and after the conclusion of rain events.

- Inspect BMPs subject to non-stormwater discharges daily while non-stormwater discharges occur.
- Sample non-stormwater discharges and stormwater runoff that contacts uncured and partially cured concrete as required by the General Permit.
- Ensure that employees and subcontractors implement appropriate measures for storage, handling, and use of curing compounds.
- Inspect cure containers and spraying equipment for leaks.

References

Blue Print for a Clean Bay-Construction-Related Industries: Best Management Practices for Stormwater Pollution Prevention; Santa Clara Valley Non Point Source Pollution Control Program, 1992.

Stormwater Quality Handbooks - Construction Site Best Management Practices (BMPs) Manual, State of California Department of Transportation (Caltrans), March 2003.

Stormwater Management for Construction Activities, Developing Pollution Prevention Plans and Best Management Practices, EPA 832-R-92005; USEPA, April 1992.

Erosion and Sediment Control Manual, Oregon Department of Environmental Quality, February 2005.

Concrete Finishing NS-13

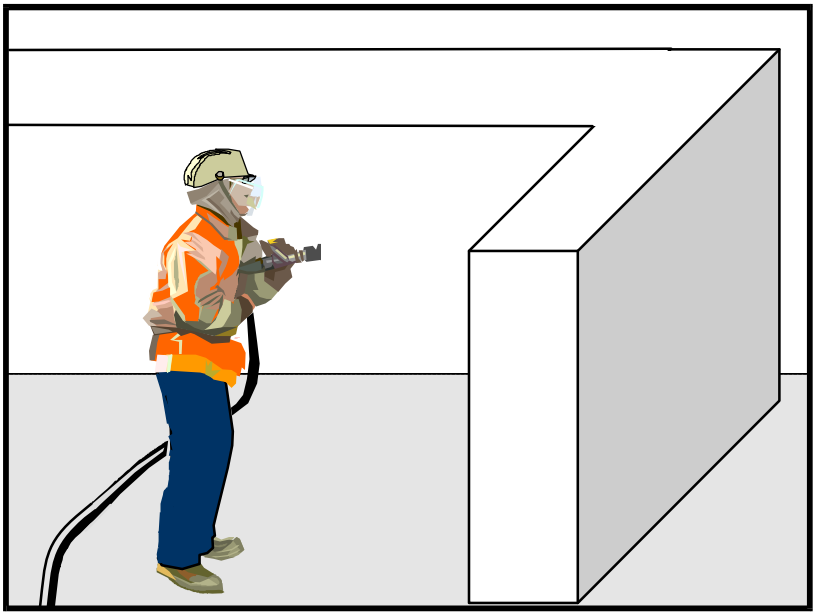

Categories

EC	Erosion Control	
SE	Sediment Control	
TC	Tracking Control	
WE	Wind Erosion Control	
NS	Non-Stormwater Management Control	☑
WM	Waste Management and Materials Pollution Control	☑

Legend:

☑ **Primary Category**

☒ **Secondary Category**

Targeted Constituents

Sediment	☑
Nutrients	
Trash	
Metals	☑
Bacteria	
Oil and Grease	
Organics	☑

Potential Alternatives

None

Description and Purpose

Concrete finishing methods are used for bridge deck rehabilitation, paint removal, curing compound removal, and final surface finish appearances. Methods include sand blasting, shot blasting, grinding, or high pressure water blasting. Stormwater and non-stormwater exposed to concrete finishing by-products may have a high pH and may contain chemicals, metals, and fines. Proper procedures and implementation of appropriate BMPs can minimize the impact that concrete-finishing methods may have on stormwater and non-stormwater discharges.

The General Permit incorporates Numeric Effluent Limits (NEL) and Numeric Action Levels (NAL) for pH (see Section 2 of this handbook to determine your project's risk level and if you are subject to these requirements).

Concrete and its associated curing materials have basic chemical properties that can raise pH levels outside of the permitted range. Additional care should be taken when managing these materials to prevent them from coming into contact with stormwater flows, which could lead to exceedances of the General Permit requirements.

Suitable Applications

These procedures apply to all construction locations where concrete finishing operations are performed.

Limitations

- Runoff contact with concrete waste can raise pH levels in the water to environmentally harmful levels and trigger permit violations.

Implementation

- Collect and properly dispose of water from high-pressure water blasting operations.
- Collect contaminated water from blasting operations at the top of slopes. Transport or dispose of contaminated water while using BMPs such as those for erosion control. Refer to EC-9, Earth Dikes and Drainage Swales, EC-10, Velocity Dissipation Devices, and EC-11, Slope Drains.
- Direct water from blasting operations away from inlets and watercourses to collection areas for infiltration or other means of removal (dewatering). Refer to NS-2 Dewatering Operations.
- Protect inlets during sandblasting operations. Refer to SE-10, Storm Drain Inlet Protection.
- Refer to WM-8, Concrete Waste Management for disposal of concrete debris.
- Minimize the drift of dust and blast material as much as possible by keeping the blasting nozzle close to the surface.
- When blast residue contains a potentially hazardous waste, refer to WM-6, Hazardous Waste Management.

Education

- Educate employees, subcontractors, and suppliers on proper concrete finishing techniques to prevent contact with discharge as described herein.
- Arrange for the QSP or the appropriately trained contractor's superintendent or representative to oversee and enforce concrete finishing procedures.

Costs

These measures are generally of low cost.

Inspection and Maintenance

- Inspect and verify that activity-based BMPs are in place prior to the commencement of associated activities.
- BMPs must be inspected in accordance with General Permit requirements for the associated project type and risk level. It is recommended that at a minimum, BMPs be inspected weekly, prior to forecasted rain events, daily during extended rain events, and after the conclusion of rain events.
- Inspect BMPs subject to non-stormwater discharges daily while non-stormwater discharges occur.
- Sample non-stormwater discharges and stormwater runoff that contacts concrete dust and debris as required by the General Permit.

- Sweep or vacuum up debris from sandblasting at the end of each shift.
- At the end of each work shift, remove and contain liquid and solid waste from containment structures, if any, and from the general work area.
- Inspect containment structures for damage prior to use and prior to onset of forecasted rain.

References

Blueprint for a Clean Bay: Best Management Practices to Prevent Stormwater Pollution from Construction Related Activities; Santa Clara Valley Nonpoint Source Pollution Control Program, 1995.

Stormwater Quality Handbooks - Construction Site Best Management Practices (BMPs) Manual, State of California Department of Transportation (Caltrans), March 2003.

Stormwater Management for Construction Activities, Developing Pollution Prevention Plans and Best Management Practices, EPA 832-R-92005; USEPA, April 1992.

Material Over Water NS-14

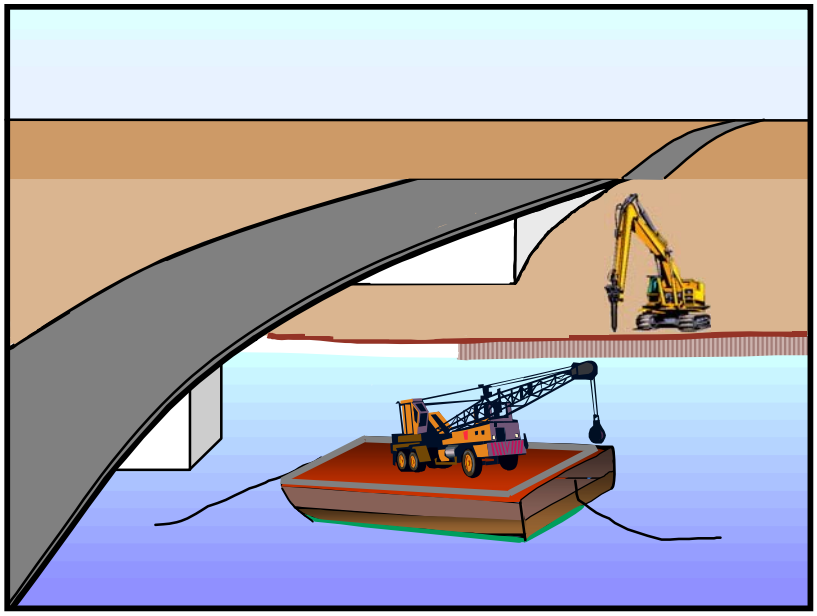

Categories

EC	Erosion Control	
SE	Sediment Control	
TC	Tracking Control	
WE	Wind Erosion Control	
NS	Non-Stormwater Management Control	☑
WM	Waste Management and Materials Pollution Control	☑

Legend:

☑ **Primary Objective**

☒ **Secondary Objective**

Targeted Constituents

Sediment	☑
Nutrients	☑
Trash	☑
Metals	☑
Bacteria	☑
Oil and Grease	☑
Organics	☑

Potential Alternatives

None

Description and Purpose

Procedures for the proper use, storage, and disposal of materials and equipment on barges, boats, temporary construction pads, or similar locations that minimize or eliminate the discharge of potential pollutants to a watercourse.

Suitable Applications

Applies where materials and equipment are used on barges, boats, docks, and other platforms over or adjacent to a watercourse including waters of the United States. These procedures should be implemented for construction materials and wastes (solid and liquid), soil or dredging materials, or any other materials that may cause or contribute to exceedances of water quality standards.

Limitations

Dredge and fill activities are regulated by the US Army Corps of Engineers and Regional Boards under Section 404/401 of the Clean Water Act.

Implementation

- Refer to WM-1, Material Delivery and Storage and WM-4, Spill Prevention and Control.
- Use drip pans and absorbent materials for equipment and vehicles and ensure that an adequate supply of spill clean up materials is available.
- Drip pans should be placed under all vehicles and equipment placed on docks, barges, or other structures over

water bodies when the vehicle or equipment is expected to be idle for more than 1 hour.

- Maintain equipment in accordance with NS-10, Vehicle and Equipment Maintenance. If a leaking line cannot be repaired, remove equipment from over the water.
- Provide watertight curbs or toe boards to contain spills and prevent materials, tools, and debris from leaving the barge, platform, dock, etc.
- Secure all materials to prevent discharges to receiving waters via wind.
- Identify types of spill control measures to be employed, including the storage of such materials and equipment. Ensure that staff is trained regarding the use of the materials, deployment and access of control measures, and reporting measures.
- In case of spills, contact the local Regional Board as soon as possible but within 48 hours.
- Refer to WM-5, Solid Waste Management (non-hazardous) and WM-6, Hazardous Waste Management. Ensure the timely and proper removal of accumulated wastes
- Comply with all necessary permits required for construction within or near the watercourse, such as Regional Water Quality Control Board, U.S. Army Corps of Engineers, Department of Fish and Game or and other local permitting.
- Discharges to waterways should be reported to the Regional Water Quality Control Board immediately upon discovery. A written discharge notification must follow within 7 days. Follow the spill reporting procedures contained in SWPPP.

Costs

These measures are generally of low to moderate cost. Exceptions are areas for temporary storage of materials, engine fluids, or wastewater pump out.

Inspection and Maintenance

- Inspect and verify that activity–based BMPs are in place prior to the commencement of associated activities. While activities associated with the BMP are under way, inspect weekly during the rainy season and of two-week intervals in the non-rainy season to verify continued BMP implementation.
- Inspect BMPs subject to non-stormwater discharge daily while non-stormwater discharges occur.
- Ensure that employees and subcontractors implement the appropriate measures for storage and use of materials and equipment.
- Inspect and maintain all associated BMPs and perimeter controls to ensure continuous protection of the water courses, including waters of the United States.

References

Stormwater Quality Handbooks - Construction Site Best Management Practices (BMPs) Manual, State of California Department of Transportation (Caltrans), November 2000.

Stormwater Management for Construction Activities, Developing Pollution Prevention Plans and Best Management Practices, EPA 832-R-92005; USEPA, April 1992.

Demolition Adjacent to Water NS-15

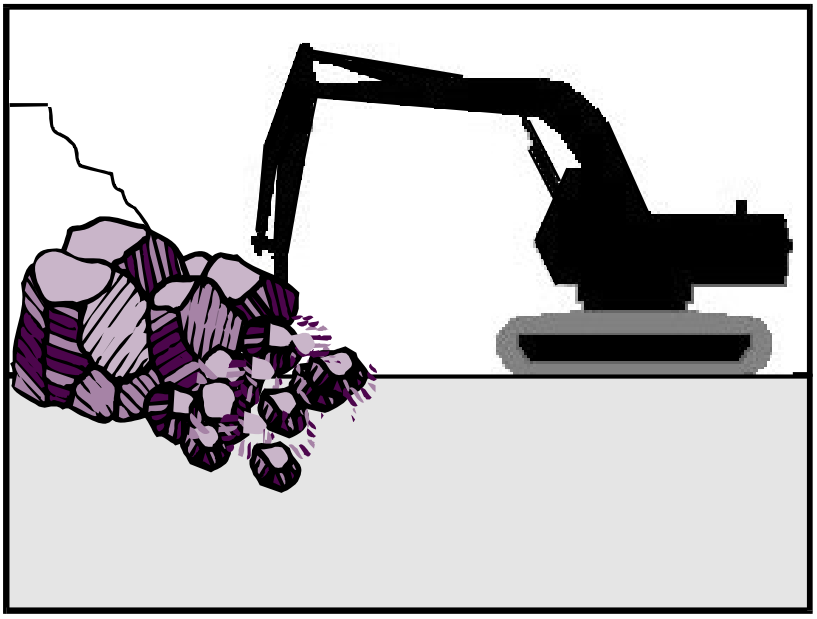

Categories

EC	Erosion Control	
SE	Sediment Control	
TC	Tracking Control	
WE	Wind Erosion Control	
NS	Non-Stormwater Management Control	☑
WM	Waste Management and Materials Pollution Control	

Legend:

☑ **Primary Objective**

☒ **Secondary Objective**

Targeted Constituents

Sediment	☑
Nutrients	☑
Trash	☑
Metals	☑
Bacteria	☑
Oil and Grease	☑
Organics	☑

Potential Alternatives

None

Description and Purpose

Procedures to protect water bodies from debris and wastes associated with structure demolition or removal over or adjacent to watercourses.

Suitable Applications

Full bridge demolition and removal, partial bridge removal (barrier rail, edge of deck) associated with bridge widening projects, concrete channel removal, or any other structure removal that could potentially affect water quality.

Limitations

None identified.

Implementation

- Refer to NS-5, Clear Water Diversion, to direct water away from work areas.
- Use attachments on construction equipment such as backhoes to catch debris from small demolition operations.
- Use covers or platforms to collect debris.
- Platforms and covers are to be approved by the owner.
- Stockpile accumulated debris and waste generated during demolition away from watercourses and in accordance with WM-3, Stockpile Management.
- Ensure safe passage of wildlife, as necessary.

- Discharges to waterways shall be reported to the Regional Water Quality Control Board immediately upon discovery. A written discharge notification must follow within 7 days. Follow the spill reporting procedures in the SWPPP.

- For structures containing hazardous materials, i.e., lead paint or asbestos, refer to BMP WM-6, Hazardous Waste Management. For demolition work involving soil excavation around lead-painted structures, refer to WM-7, Contaminated Soil Management.

Costs

Cost may vary according to the combination of practices implemented.

Inspection and Maintenance

- Inspect and verify that activity–based BMPs are in place prior to the commencement of associated activities. While activities associated with the BMP are under way, inspect weekly during the rainy season and of two-week intervals in the non-rainy season to verify continued BMP implementation.

- Inspect BMPs subject to non-stormwater discharge daily while non-stormwater discharges occur.

- Any debris-catching devices shall be emptied regularly. Collected debris shall be removed and stored away from the watercourse and protected from runon and runoff.

References

Stormwater Quality Handbooks - Construction Site Best Management Practices (BMPs) Manual, State of California Department of Transportation (Caltrans), November 2000.

Stormwater Management for Construction Activities, Developing Pollution Prevention Plans and Best Management Practices, EPA 832-R-92005; USEPA, April 1992.

Temporary Batch Plants NS-16

Categories

EC	Erosion Control	
SE	Sediment Control	
TC	Tracking Control	
WE	Wind Erosion Control	
NS	Non-Stormwater Management Control	☑
WM	Waste Management and Materials Pollution Control	

Legend:

☑ **Primary Category**

☒ **Secondary Category**

Targeted Constituents

Sediment	☑
Nutrients	
Trash	☑
Metals	☑
Bacteria	
Oil and Grease	
Organics	

Potential Alternatives

None

Description and Purpose

The construction of roads, bridges, retaining walls, and other large structures in remote areas, often requires temporary batch plant facilities to manufacture Portland Cement Concrete (PCC) or asphalt cement (AC). Temporary batch plant facilities typically consist of silos containing fly ash, lime, and cement; heated tanks of liquid asphalt; sand and gravel material storage areas; mixing equipment; above ground storage tanks containing concrete additives and water; and designated areas for sand and gravel truck unloading, concrete truck loading, and concrete truck washout. Proper control and use of equipment, materials, and waste products from temporary batch plant facilities will reduce the discharge of potential pollutants to the storm drain system or watercourses, reduce air emissions, and mitigate noise impacts.

The General Permit draft incorporates Numeric Effluent Limits (NEL) and Numeric Action Levels (NAL) for pH (see Section 2 of this handbook to determine your project's risk level and if you are subject to these requirements). Many types of batch plant materials, including mortar, concrete, cement and block and their associated wastes have basic chemical properties that can raise pH levels outside of the permitted range. Additional care should be taken when managing these materials to prevent them from coming into contact with stormwater flows which may cause an exceedence of the General Permit Requirements.

Suitable Applications

These procedures typically apply to construction sites where temporary batch plant facilities are used; however, some of the practices described are applicable to construction sites with general concrete use.

Limitations

The General Permit for discharges of stormwater associated with industrial activities (General Industrial Permit) may be applicable to temporary batch plants.

Specific permit requirements or mitigation measures such as Air Resources Board (ARB), Air Quality Management District (AQMD), Air Pollution Control District (APCD, Regional Water Quality Control Board (RWQCB), county ordinances and city ordinances may require alternative mitigation measures for temporary batch plants. Contact the local regulatory agencies to determine if a permit is required.

Implementation

Planning

- Temporary batch plants may be subject to the General Industrial Permit. To obtain a copy of this permit and the application forms, visit http://www.waterboards.ca.gov or contact the State Water Resources Control Board.
- Proper planning, design, and construction of temporary batch plants should be implemented to minimize potential water quality, air pollution, and noise impacts associated with temporary batch plants.
- BMPs and a Construction Site Monitoring Plan (CSMP) should be included in the project Stormwater Pollution Prevention Plan (SWPPP). BMPs should be implemented, inspected, and maintained in accordance with these plans.
- Temporary batch plants should be managed to comply with AQMD Statewide Registration Program and/or local AQMD Portable Equipment Registration requirements.
- Construct temporary batch plants downwind of existing developments whenever possible.
- Placement of access roads should be planned to mitigate water and air quality impacts.

Layout and Design

- Temporary batch plants should be properly located and designed to mitigate water quality impacts to receiving water bodies. Batch plants should be located away from watercourses, drainage courses, and drain inlets. Batch plants should be located to minimize the potential for stormwater runon onto the site.
- Temporary batch plant facilities (including associated stationary equipment and stockpiles) should be located at least 300 ft from any recreational area, school, residence, or other structure not associated with the construction project.
- Construct continuous interior AC or PCC berms around batch plant equipment (mixing equipment, silos, concrete drop points, conveyor belts, admixture tanks, etc.) to facilitate

proper containment and cleanup of releases. Rollover or flip top curbs or dikes should be placed at ingress and egress points (SE-12, Temporary Silt Dike).

- Direct runoff from the paved or unpaved portion of the batch plant into a sump and pipe to a lined washout area or dewatering tank.
- Direct stormwater and non-stormwater runoff from unpaved portions of batch plant facility to catchment ponds or tanks.
- Construct and remove concrete washout facilities in accordance with WM-8, Concrete Waste Management.
- Layout of a typical batch plant and associated BMP is located at the end of this BMP fact sheet.

Operational Procedures

- Washout of concrete trucks should be conducted in a designated area in accordance with WM-8, Concrete Waste Management.
- Do not dispose of concrete into drain inlets, the stormwater drainage system, or watercourses.
- Washing of concrete mixing and transport equipment (including concrete truck washout) should occur in a designated area in accordance with WM-8, Concrete Waste Management.
- Washing equipment, tools, or vehicles to remove PCC should be conducted in accordance with NS-7, Potable Water/Irrigation, NS-8, Vehicle and Equipment Cleaning, and WM-8, Concrete Waste Management..
- All dry material transfer points should be ducted through a fabric or cartridge type filter unless there are no visible emissions from the transfer point.
- Equip all bulk storage silos, including auxiliary bulk storage trailers, with fabric or cartridge type filter(s).
- Maintain silo vent filters in proper operating condition.
- Equip silos and auxiliary bulk storage trailers with dust-tight service hatches.
- Fabric dust collection system should be capable of controlling particulate matter in accordance with the California Air Resources Control Board and local Air Pollution Control District Regulations.
- Fabric dust collectors (except for vent filters) should be equipped with an operational pressure differential gauge to measure the pressure drop across the filters.
- All transfer points should be equipped with a wet suppression system to control fugitive particulate emissions unless there are no visible emissions.
- All conveyors should be covered, unless the material being transferred results in no visible emissions.

- There should be no visible emissions beyond the property line, while the equipment is being operated.
- Collect dust emissions from the loading of open-bodied trucks, at the drip point of dry batch plants, or dust emissions from the drum feed for central mix plants.
- Equip silos and auxiliary bulk storage trailers with a visible and/or audible warning mechanism to warn operators that the silo or trailer is full.
- All open-bodied vehicles transporting material should be loaded with a final layer of wet sand and the truck should be covered with a tarp to reduce emissions.

Tracking Control

- Plant roads (batch truck and material delivery truck roads) and areas between stockpiles and conveyor hoppers should be stabilized (TC-2, Stabilized Construction Roadway), watered, treated with dust-suppressant chemicals (WE-1, Wind Erosion Control), or paved with a cohesive hard surface that can be repeatedly swept, maintained intact, and cleaned as necessary to control dust emissions.
- Trucks should not track PCC from plants onto public roads. Use appropriate practices from TC-1, Stabilized Construction Entrance/Exit, to prevent tracking.

Materials Storage

- WM-1, Material Delivery and Storage, should be implemented at all batch plants using concrete components or compounds. An effective strategy is to cover and contain materials.
- WM-2, Material Use should be conducted in a way to minimize or eliminate the discharge of materials to storm drain system or watercourse.
- Ensure that finer materials are not dispersed into the air during operations, such as unloading of cement delivery trucks.
- Stockpiles should be covered and enclosed with perimeter sediment barriers per WM-3, Stockpile Management. Uncovered stockpiles should be sprayed with water and/or dust-suppressant chemicals as necessary to control dust emissions, unless the stockpiled material results in no visible emissions. An operable stockpile watering system should be onsite at all times.
- Store bagged and boxed materials on pallets and cover or store in a completely enclosed storage area on non-working days and prior to rain.
- Minimize stockpiles of demolished PCC by recycling them in a timely manner.
- Provide secondary containment for liquid materials (WM-1, Material Delivery and Storage, WM-10, Liquid Waste Management). Containment should provide sufficient volume to contain precipitation from a 25-year storm plus 10% of the aggregate volume of all containers or plus 100% of the largest container, whichever is greater.
- Handle solid and liquid waste in accordance with WM-5, Solid Waste Management, WM-10, Liquid Waste Management, and WM-8, Concrete Waste Management.

- Maintain adequate supplies of spill cleanup materials and train staff to respond to spills per WM-4, Spill Prevention and Control.
- Immediately contain and clean up spilled cement and fly ash and contain.

Equipment Maintenance

- Equipment should be maintained to prevent fluid leaks and spills per NS-9, Vehicle and Equipment Fueling, and NS-10, Vehicle and Equipment Maintenance.
- Maintain adequate supplies of spill cleanup materials and train staff to respond to spills per WM-4, Spill Prevention and Control.
- Incorporate other BMPs such as WM-5, Solid Waste Management, WM-6, Hazardous Waste Management, and WM-10, Liquid Waste Management.

Costs

Costs will vary depending on the size of the facility and combination of BMPs implemented.

Inspection and Maintenance

- Inspect and verify that activity–based BMPs are in place prior to the commencement of associated activities.
- BMPs must be inspected in accordance with General Permit requirements for the associated project type and risk level. It is recommended that at a minimum, BMPs be inspected weekly, prior to forecasted rain events, daily during extended rain events, and after the conclusion of rain events.
- Inspect BMPs subject to non-stormwater discharge daily while non-stormwater discharges occur.
- Sample non-stormwater discharges and stormwater runoff that contacts cementitious materials or fly ash as required by the General Permit.
- Inspect and repair equipment (for damaged hoses, fittings, and gaskets).
- Inspect and maintain a Stabilized Construction Entrance/Exit (TC-1) as needed.
- Inspect and maintain stabilized haul roads as needed (TC-2, Stabilized Construction Roadway).
- Inspect and maintain materials and waste storage areas as needed.

References

Stormwater Quality Handbooks - Construction Site Best Management Practices (BMPs) Manual, State of California Department of Transportation (Caltrans), March 2003.

Stormwater Management for Construction Activities, Developing Pollution Prevention Plans and Best Management Practices, EPA 832-R-92005; USEPA, April 1992.

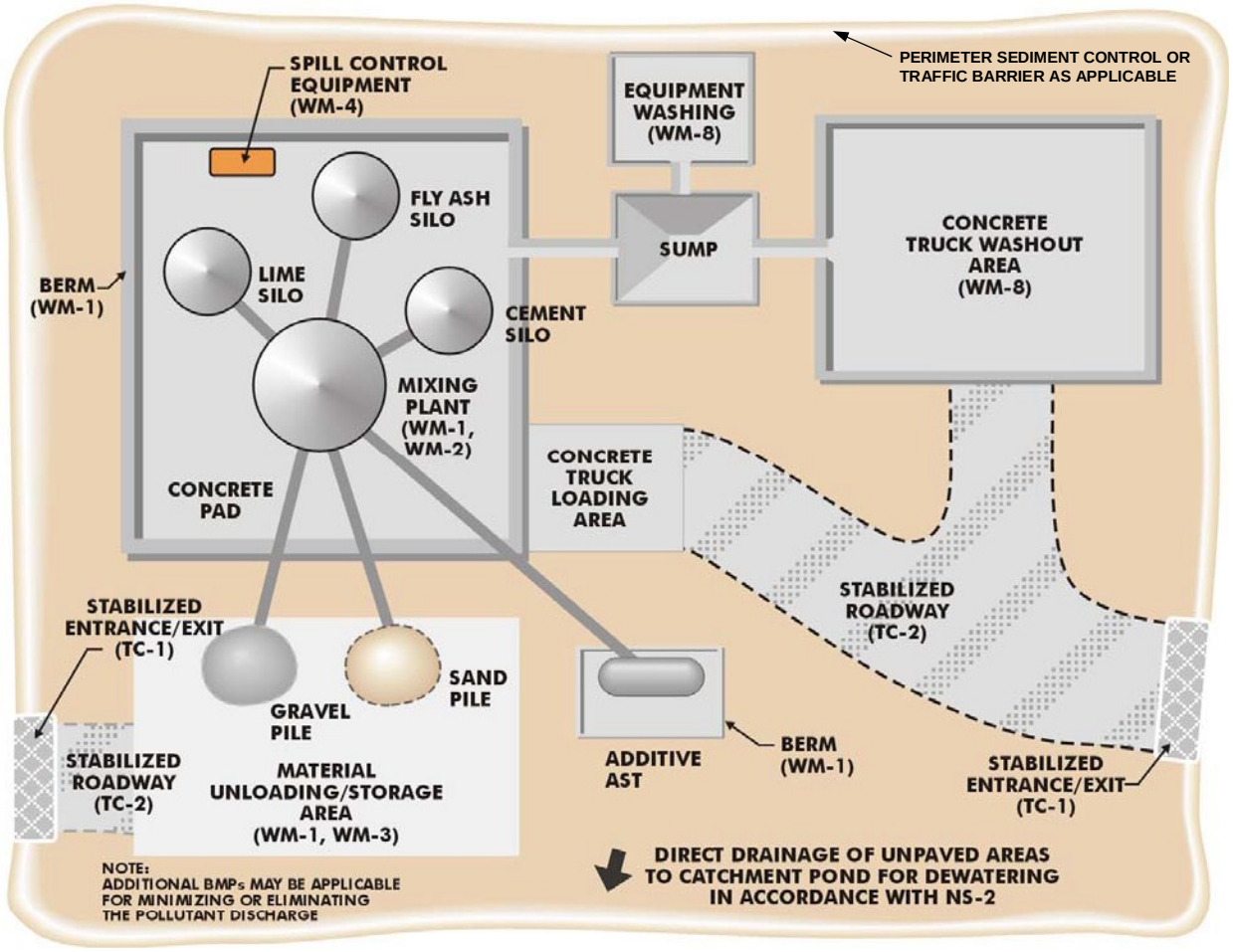

Typical Temporary Batch

Material Delivery and Storage WM-1

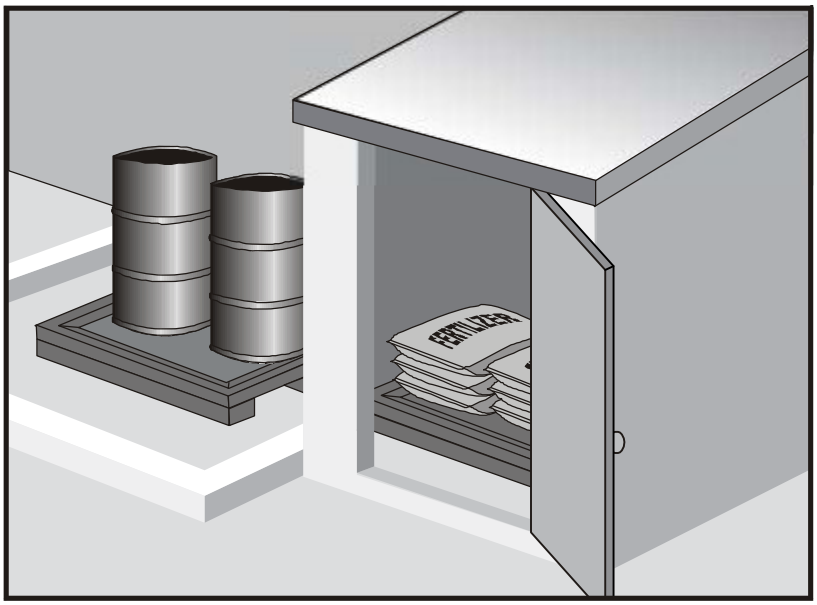

Categories		
EC	Erosion Control	
SE	Sediment Control	
TC	Tracking Control	
WE	Wind Erosion Control	
NS	Non-Stormwater Management Control	
WM	Waste Management and Materials Pollution Control	☑

Legend:

☑ **Primary Category**

☒ **Secondary Category**

Targeted Constituents	
Sediment	☑
Nutrients	☑
Trash	☑
Metals	☑
Bacteria	
Oil and Grease	☑
Organics	☑

Potential Alternatives

None

Description and Purpose

Prevent, reduce, or eliminate the discharge of pollutants from material delivery and storage to the stormwater system or watercourses by minimizing the storage of hazardous materials onsite, storing materials in watertight containers and/or a completely enclosed designated area, installing secondary containment, conducting regular inspections, and training employees and subcontractors.

This best management practice covers only material delivery and storage. For other information on materials, see WM-2, Material Use, or WM-4, Spill Prevention and Control. For information on wastes, see the waste management BMPs in this section.

Suitable Applications

These procedures are suitable for use at all construction sites with delivery and storage of the following materials:

- Soil stabilizers and binders
- Pesticides and herbicides
- Fertilizers
- Detergents
- Plaster
- Petroleum products such as fuel, oil, and grease

- Asphalt and concrete components
- Hazardous chemicals such as acids, lime, glues, adhesives, paints, solvents, and curing compounds
- Concrete compounds
- Other materials that may be detrimental if released to the environment

Limitations

- Space limitation may preclude indoor storage.
- Storage sheds often must meet building and fire code requirements.

Implementation

The following steps should be taken to minimize risk:

- Chemicals must be stored in water tight containers with appropriate secondary containment or in a storage shed.
- When a material storage area is located on bare soil, the area should be lined and bermed.
- Use containment pallets or other practical and available solutions, such as storing materials within newly constructed buildings or garages, to meet material storage requirements.
- Stack erodible landscape material on pallets and cover when not in use.
- Contain all fertilizers and other landscape materials when not in use.
- Temporary storage areas should be located away from vehicular traffic.
- Material Safety Data Sheets (MSDS) should be available on-site for all materials stored that have the potential to effect water quality.
- Construction site areas should be designated for material delivery and storage.
- Material delivery and storage areas should be located away from waterways, if possible.
    - Avoid transport near drainage paths or waterways.
    - Surround with earth berms or other appropriate containment BMP. See EC-9, Earth Dikes and Drainage Swales.
    - Place in an area that will be paved.
- Storage of reactive, ignitable, or flammable liquids must comply with the fire codes of your area. Contact the local Fire Marshal to review site materials, quantities, and proposed storage area to determine specific requirements. See the Flammable and Combustible Liquid Code, NFPA30.
- An up to date inventory of materials delivered and stored onsite should be kept.

- Hazardous materials storage onsite should be minimized.
- Hazardous materials should be handled as infrequently as possible.
- Keep ample spill cleanup supplies appropriate for the materials being stored. Ensure that cleanup supplies are in a conspicuous, labeled area.
- Employees and subcontractors should be trained on the proper material delivery and storage practices.
- Employees trained in emergency spill cleanup procedures must be present when dangerous materials or liquid chemicals are unloaded.
- If significant residual materials remain on the ground after construction is complete, properly remove and dispose of materials and any contaminated soil. See WM-7, Contaminated Soil Management. If the area is to be paved, pave as soon as materials are removed to stabilize the soil.

Material Storage Areas and Practices

- Liquids, petroleum products, and substances listed in 40 CFR Parts 110, 117, or 302 should be stored in approved containers and drums and should not be overfilled. Containers and drums should be placed in temporary containment facilities for storage.
- A temporary containment facility should provide for a spill containment volume able to contain precipitation from a 25 year storm event, plus the greater of 10% of the aggregate volume of all containers or 100% of the capacity of the largest container within its boundary, whichever is greater.
- A temporary containment facility should be impervious to the materials stored therein for a minimum contact time of 72 hours.
- A temporary containment facility should be maintained free of accumulated rainwater and spills. In the event of spills or leaks, accumulated rainwater and spills should be collected and placed into drums. These liquids should be handled as a hazardous waste unless testing determines them to be non-hazardous. All collected liquids or non-hazardous liquids should be sent to an approved disposal site.
- Sufficient separation should be provided between stored containers to allow for spill cleanup and emergency response access.
- Incompatible materials, such as chlorine and ammonia, should not be stored in the same temporary containment facility.
- Materials should be covered prior to, and during rain events.
- Materials should be stored in their original containers and the original product labels should be maintained in place in a legible condition. Damaged or otherwise illegible labels should be replaced immediately.

- Bagged and boxed materials should be stored on pallets and should not be allowed to accumulate on the ground. To provide protection from wind and rain throughout the rainy season, bagged and boxed materials should be covered during non-working days and prior to and during rain events.
- Stockpiles should be protected in accordance with WM-3, Stockpile Management.
- Materials should be stored indoors within existing structures or completely enclosed storage sheds when available.
- Proper storage instructions should be posted at all times in an open and conspicuous location.
- An ample supply of appropriate spill clean up material should be kept near storage areas.
- Also see WM-6, Hazardous Waste Management, for storing of hazardous wastes.

Material Delivery Practices

- Keep an accurate, up-to-date inventory of material delivered and stored onsite.
- Arrange for employees trained in emergency spill cleanup procedures to be present when dangerous materials or liquid chemicals are unloaded.

Spill Cleanup

- Contain and clean up any spill immediately.
- Properly remove and dispose of any hazardous materials or contaminated soil if significant residual materials remain on the ground after construction is complete. See WM-7, Contaminated Soil Management.
- See WM-4, Spill Prevention and Control, for spills of chemicals and/or hazardous materials.
- If spills or leaks of materials occur that are not contained and could discharge to surface waters, non-visible sampling of site discharge may be required. Refer to the General Permit or to your project specific Construction Site Monitoring Plan to determine if and where sampling is required.

Cost

- The largest cost of implementation may be in the construction of a materials storage area that is covered and provides secondary containment.

Inspection and Maintenance

- BMPs must be inspected in accordance with General Permit requirements for the associated project type and risk level. It is recommended that at a minimum, BMPs be inspected weekly, prior to forecasted rain events, daily during extended rain events, and after the conclusion of rain events.
- Keep storage areas clean and well organized, including a current list of all materials onsite.
- Inspect labels on containers for legibility and accuracy.

- Repair or replace perimeter controls, containment structures, covers, and liners as needed to maintain proper function.

References

Blueprint for a Clean Bay: Best Management Practices to Prevent Stormwater Pollution from Construction Related Activities; Santa Clara Valley Nonpoint Source Pollution Control Program, 1995.

Coastal Nonpoint Pollution Control Program: Program Development and Approval Guidance, Working Group Working Paper; USEPA, April 1992.

Stormwater Quality Handbooks - Construction Site Best Management Practices (BMPs) Manual, State of California Department of Transportation (Caltrans), March 2003.

Stormwater Management for Construction Activities; Developing Pollution Prevention Plans and Best Management Practice, EPA 832-R-92005; USEPA, April 1992.

Material Use WM-2

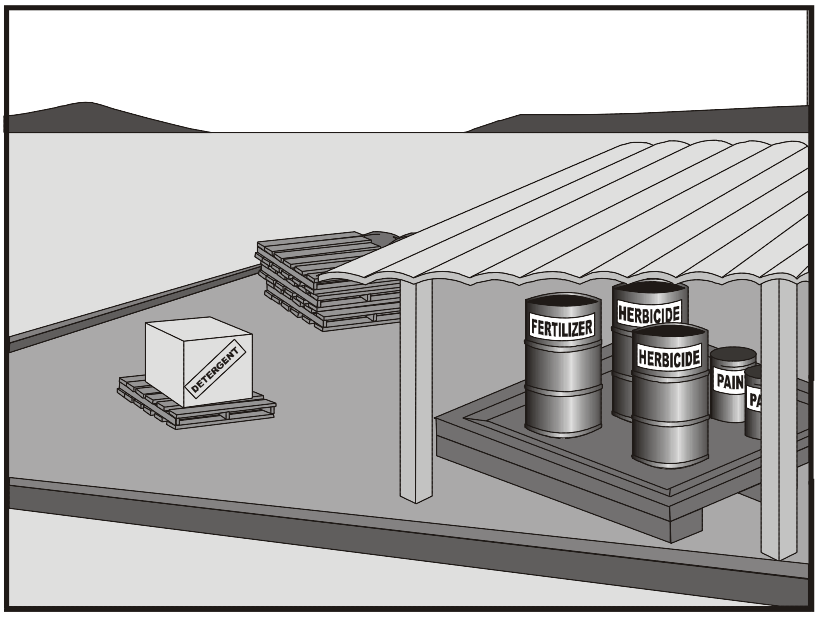

Categories

EC	Erosion Control	
SE	Sediment Control	
TC	Tracking Control	
WE	Wind Erosion Control	
NS	Non-Stormwater Management Control	
WM	Waste Management and Materials Pollution Control	☑

Legend:

☑ **Primary Category**

☒ **Secondary Category**

Targeted Constituents

Sediment	☑
Nutrients	☑
Trash	☑
Metals	☑
Bacteria	
Oil and Grease	☑
Organics	☑

Potential Alternatives

None

Description and Purpose

Prevent or reduce the discharge of pollutants to the storm drain system or watercourses from material use by using alternative products, minimizing hazardous material use onsite, and training employees and subcontractors.

Suitable Applications

This BMP is suitable for use at all construction projects. These procedures apply when the following materials are used or prepared onsite:

- Pesticides and herbicides
- Fertilizers
- Detergents
- Petroleum products such as fuel, oil, and grease
- Asphalt and other concrete components
- Other hazardous chemicals such as acids, lime, glues, adhesives, paints, solvents, and curing compounds
- Other materials that may be detrimental if released to the environment

Limitations

Safer alternative building and construction products may not be available or suitable in every instance.

Implementation

The following steps should be taken to minimize risk:

- Minimize use of hazardous materials onsite.
- Follow manufacturer instructions regarding uses, protective equipment, ventilation, flammability, and mixing of chemicals.
- Train personnel who use pesticides. The California Department of Pesticide Regulation and county agricultural commissioners license pesticide dealers, certify pesticide applicators, and conduct onsite inspections.
- The preferred method of termiticide application is soil injection near the existing or proposed structure foundation/slab; however, if not feasible, soil drench application of termiticides should follow EPA label guidelines and the following recommendations (most of which are applicable to most pesticide applications):
  - Do not treat soil that is water-saturated or frozen.
  - Application shall not commence within 24-hours of a predicted precipitation event with a 40% or greater probability. Weather tracking must be performed on a daily basis prior to termiticide application and during the period of termiticide application.
  - Do not allow treatment chemicals to runoff from the target area. Apply proper quantity to prevent excess runoff. Provide containment for and divert stormwater from application areas using berms or diversion ditches during application.
  - Dry season: Do not apply within 10 feet of storm drains. Do not apply within 25 feet of aquatic habitats (such as, but not limited to, lakes; reservoirs; rivers; permanent streams; marshes or ponds; estuaries; and commercial fish farm ponds).
  - Wet season: Do not apply within 50 feet of storm drains or aquatic habitats (such as, but not limited to, lakes; reservoirs; rivers; permanent streams; marshes or ponds; estuaries; and commercial fish farm ponds) unless a vegetative buffer is present (if so, refer to dry season requirements).
  - Do not make on-grade applications when sustained wind speeds are above 10 mph (at application site) at nozzle end height.
  - Cover treatment site prior to a rain event in order to prevent run-off of the pesticide into non-target areas. The treated area should be limited to a size that can be backfilled and/or covered by the end of the work shift. Backfilling or covering of the treated area shall be done by the end of the same work shift in which the application is made.
  - The applicator must either cover the soil him/herself or provide written notification of the above requirement to the contractor on site and to the person commissioning the

application (if different than the contractor). If notice is provided to the contractor or the person commissioning the application, then they are responsible under the Federal Insecticide Fungicide, and Rodenticide Act (FIFRA) to ensure that: 1) if the concrete slab cannot be poured over the treated soil within 24 hours of application, the treated soil is covered with a waterproof covering (such as polyethylene sheeting), and 2) the treated soil is covered if precipitation is predicted to occur before the concrete slab is scheduled to be poured.

- Do not over-apply fertilizers, herbicides, and pesticides. Prepare only the amount needed. Follow the recommended usage instructions. Over-application is expensive and environmentally harmful. Unless on steep slopes, till fertilizers into the soil rather than hydraulic application. Apply surface dressings in several smaller applications, as opposed to one large application, to allow time for infiltration and to avoid excess material being carried offsite by runoff. Do not apply these chemicals before predicted rainfall.
- Train employees and subcontractors in proper material use.
- Supply Material Safety Data Sheets (MSDS) for all materials.
- Dispose of latex paint and paint cans, used brushes, rags, absorbent materials, and drop cloths, when thoroughly dry and are no longer hazardous, with other construction debris.
- Do not remove the original product label; it contains important safety and disposal information. Use the entire product before disposing of the container.
- Mix paint indoors or in a containment area. Never clean paintbrushes or rinse paint containers into a street, gutter, storm drain, or watercourse. Dispose of any paint thinners, residue, and sludge(s) that cannot be recycled, as hazardous waste.
- For water-based paint, clean brushes to the extent practicable, and rinse to a drain leading to a sanitary sewer where permitted, or contain for proper disposal off site. For oil-based paints, clean brushes to the extent practicable, and filter and reuse thinners and solvents.
- Use recycled and less hazardous products when practical. Recycle residual paints, solvents, non-treated lumber, and other materials.
- Use materials only where and when needed to complete the construction activity. Use safer alternative materials as much as possible. Reduce or eliminate use of hazardous materials onsite when practical.
- Document the location, time, chemicals applied, and applicator's name and qualifications.
- Keep an ample supply of spill clean up material near use areas. Train employees in spill clean up procedures.
- Avoid exposing applied materials to rainfall and runoff unless sufficient time has been allowed for them to dry.
- Discontinue use of erodible landscape material within 2 days prior to a forecasted rain event and materials should be covered and/or bermed.

- Provide containment for material use areas such as masons' areas or paint mixing/preparation areas to prevent materials/pollutants from entering stormwater.

Costs

All of the above are low cost measures.

Inspection and Maintenance

- Inspect and verify that activity-based BMPs are in place prior to the commencement of associated activities.
- BMPs must be inspected in accordance with General Permit requirements for the associated project type and risk level. It is recommended that at a minimum, BMPs be inspected weekly, prior to forecasted rain events, daily during extended rain events, and after the conclusion of rain events.
- Ensure employees and subcontractors throughout the job are using appropriate practices.

References

Blueprint for a Clean Bay: Best Management Practices to Prevent Stormwater Pollution from Construction Related Activities; Santa Clara Valley Nonpoint Source Pollution Control Program, 1995.

Coastal Nonpoint Pollution Control Program: Program Development and Approval Guidance, Working Group Working Paper; USEPA, April 1992.

Comments on Risk Assessments Risk Reduction Options for Cypermethrin: Docket No. OPP–2005–0293; California Stormwater Quality Association (CASQA) letter to USEPA, 2006.Environmental Hazard and General Labeling for Pyrethroid Non-Agricultural Outdoor Products, EPA-HQ-OPP-2008-0331-0021; USEPA, 2008.

Stormwater Quality Handbooks - Construction Site Best Management Practices (BMPs) Manual, State of California Department of Transportation (Caltrans), March 2003.

Stormwater Management for Construction Activities; Developing Pollution Prevention Plans and Best Management Practice, EPA 832-R-92005; USEPA, April 1992.

Stockpile Management WM-3

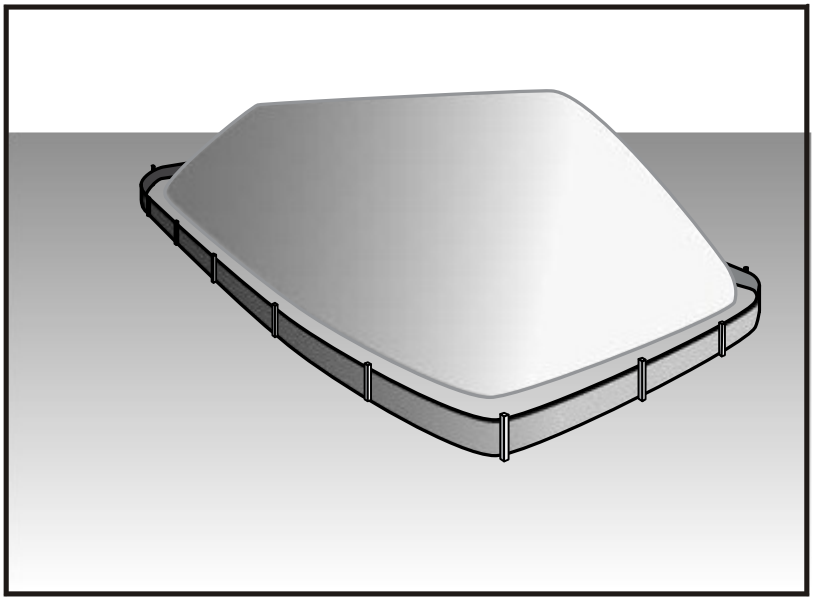

Categories		
EC	Erosion Control	
SE	Sediment Control	☒
TC	Tracking Control	
WE	Wind Erosion Control	
NS	Non-Stormwater Management Control	☒
WM	Waste Management and Materials Pollution Control	☑

Legend:
☑ **Primary Category**
☒ **Secondary Category**

Targeted Constituents	
Sediment	☑
Nutrients	☑
Trash	☑
Metals	☑
Bacteria	
Oil and Grease	☑
Organics	☑

Potential Alternatives

None

Description and Purpose

Stockpile management procedures and practices are designed to reduce or eliminate air and stormwater pollution from stockpiles of soil, soil amendments, sand, paving materials such as portland cement concrete (PCC) rubble, asphalt concrete (AC), asphalt concrete rubble, aggregate base, aggregate sub base or pre-mixed aggregate, asphalt minder (so called "cold mix" asphalt), and pressure treated wood.

Suitable Applications

Implement in all projects that stockpile soil and other loose materials.

Limitations

- Plastic sheeting as a stockpile protection is temporary and hard to manage in windy conditions. Where plastic is used, consider use of plastic tarps with nylon reinforcement which may be more durable than standard sheeting.
- Plastic sheeting can increase runoff volume due to lack of infiltration and potentially cause perimeter control failure.
- Plastic sheeting breaks down faster in sunlight.
- The use of Plastic materials and photodegradable plastics should be avoided.

Implementation

Protection of stockpiles is a year-round requirement. To properly manage stockpiles:

- On larger sites, a minimum of 50 ft separation from concentrated flows of stormwater, drainage courses, and inlets is recommended.
- All stockpiles are required to be protected immediately if they are not scheduled to be used within 14 days.
- Protect all stockpiles from stormwater runon using temporary perimeter sediment barriers such as compost berms (SE-13), temporary silt dikes (SE-12), fiber rolls (SE-5), silt fences (SE-1), sandbags (SE-8), gravel bags (SE-6), or biofilter bags (SE-14). Refer to the individual fact sheet for each of these controls for installation information.
- Implement wind erosion control practices as appropriate on all stockpiled material. For specific information, see WE-1, Wind Erosion Control.
- Manage stockpiles of contaminated soil in accordance with WM-7, Contaminated Soil Management.
- Place bagged materials on pallets and under cover.
- Ensure that stockpile coverings are installed securely to protect from wind and rain.
- Some plastic covers withstand weather and sunlight better than others. Select cover materials or methods based on anticipated duration of use.

Protection of Non-Active Stockpiles

Non-active stockpiles of the identified materials should be protected further as follows:

Soil stockpiles

- Soil stockpiles should be covered or protected with soil stabilization measures and a temporary perimeter sediment barrier at all times.
- Temporary vegetation should be considered for topsoil piles that will be stockpiled for extended periods.

Stockpiles of Portland cement concrete rubble, asphalt concrete, asphalt concrete rubble, aggregate base, or aggregate sub base

- Stockpiles should be covered and protected with a temporary perimeter sediment barrier at all times.

Stockpiles of "cold mix"

- Cold mix stockpiles should be placed on and covered with plastic sheeting or comparable material at all times and surrounded by a berm.

Stockpiles of fly ash, stucco, hydrated lime

- Stockpiles of materials that may raise the pH of runoff (i.e., basic materials) should be covered with plastic and surrounded by a berm.

Stockpiles/Storage of wood (Pressure treated with chromated copper arsenate or ammoniacal copper zinc arsenate

- Treated wood should be covered with plastic sheeting or comparable material at all times and surrounded by a berm.

Protection of Active Stockpiles

Active stockpiles of the identified materials should be protected as follows:

- All stockpiles should be covered and protected with a temporary linear sediment barrier prior to the onset of precipitation.
- Stockpiles of "cold mix" and treated wood, and basic materials should be placed on and covered with plastic sheeting or comparable material and surrounded by a berm prior to the onset of precipitation.
- The downstream perimeter of an active stockpile should be protected with a linear sediment barrier or berm and runoff should be diverted around or away from the stockpile on the upstream perimeter.

Costs

For cost information associated with stockpile protection refer to the individual erosion or sediment control BMP fact sheet considered for implementation (For example, refer to SE-1 Silt Fence for installation of silt fence around the perimeter of a stockpile.)

Inspection and Maintenance

- Stockpiles must be inspected in accordance with General Permit requirements for the associated project type and risk level. It is recommended that at a minimum, BMPs be inspected weekly, prior to forecasted rain events, daily during extended rain events, and after the conclusion of rain events.
- It may be necessary to inspect stockpiles covered with plastic sheeting more frequently during certain conditions (for example, high winds or extreme heat).
- Repair and/or replace perimeter controls and covers as needed to keep them functioning properly.
- Sediment shall be removed when it reaches one-third of the barrier height.

References

Stormwater Quality Handbooks - Construction Site Best Management Practices (BMPs) Manual, State of California Department of Transportation (Caltrans), March 2003.

Spill Prevention and Control WM-4

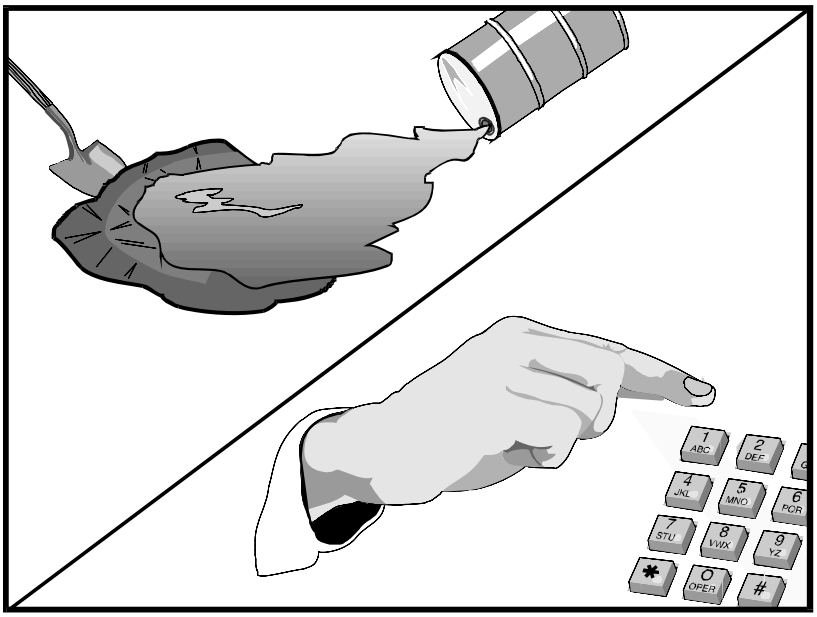

Categories

EC	Erosion Control	
SE	Sediment Control	
TC	Tracking Control	
WE	Wind Erosion Control	
NS	Non-Stormwater Management Control	
WM	Waste Management and Materials Pollution Control	☑

Legend:

☑ **Primary Objective**

☒ **Secondary Objective**

Targeted Constituents

Sediment	☑
Nutrients	☑
Trash	☑
Metals	☑
Bacteria	
Oil and Grease	☑
Organics	☑

Potential Alternatives

None

Description and Purpose

Prevent or reduce the discharge of pollutants to drainage systems or watercourses from leaks and spills by reducing the chance for spills, stopping the source of spills, containing and cleaning up spills, properly disposing of spill materials, and training employees.

This best management practice covers only spill prevention and control. However, WM-1, Materials Delivery and Storage, and WM-2, Material Use, also contain useful information, particularly on spill prevention. For information on wastes, see the waste management BMPs in this section.

Suitable Applications

This BMP is suitable for all construction projects. Spill control procedures are implemented anytime chemicals or hazardous substances are stored on the construction site, including the following materials:

- Soil stabilizers/binders
- Dust palliatives
- Herbicides
- Growth inhibitors
- Fertilizers
- Deicing/anti-icing chemicals

- Fuels
- Lubricants
- Other petroleum distillates

Limitations

- In some cases it may be necessary to use a private spill cleanup company.
- This BMP applies to spills caused by the contractor and subcontractors.
- Procedures and practices presented in this BMP are general. Contractor should identify appropriate practices for the specific materials used or stored onsite

Implementation

The following steps will help reduce the stormwater impacts of leaks and spills:

Education

- Be aware that different materials pollute in different amounts. Make sure that each employee knows what a "significant spill" is for each material they use, and what is the appropriate response for "significant" and "insignificant" spills.
- Educate employees and subcontractors on potential dangers to humans and the environment from spills and leaks.
- Hold regular meetings to discuss and reinforce appropriate disposal procedures (incorporate into regular safety meetings).
- Establish a continuing education program to indoctrinate new employees.
- Have contractor's superintendent or representative oversee and enforce proper spill prevention and control measures.

General Measures

- To the extent that the work can be accomplished safely, spills of oil, petroleum products, substances listed under 40 CFR parts 110,117, and 302, and sanitary and septic wastes should be contained and cleaned up immediately.
- Store hazardous materials and wastes in covered containers and protect from vandalism.
- Place a stockpile of spill cleanup materials where it will be readily accessible.
- Train employees in spill prevention and cleanup.
- Designate responsible individuals to oversee and enforce control measures.
- Spills should be covered and protected from stormwater runon during rainfall to the extent that it doesn't compromise clean up activities.
- Do not bury or wash spills with water.

- Store and dispose of used clean up materials, contaminated materials, and recovered spill material that is no longer suitable for the intended purpose in conformance with the provisions in applicable BMPs.
- Do not allow water used for cleaning and decontamination to enter storm drains or watercourses. Collect and dispose of contaminated water in accordance with WM-10, Liquid Waste Management.
- Contain water overflow or minor water spillage and do not allow it to discharge into drainage facilities or watercourses.
- Place proper storage, cleanup, and spill reporting instructions for hazardous materials stored or used on the project site in an open, conspicuous, and accessible location.
- Keep waste storage areas clean, well organized, and equipped with ample cleanup supplies as appropriate for the materials being stored. Perimeter controls, containment structures, covers, and liners should be repaired or replaced as needed to maintain proper function.

Cleanup

- Clean up leaks and spills immediately.
- Use a rag for small spills on paved surfaces, a damp mop for general cleanup, and absorbent material for larger spills. If the spilled material is hazardous, then the used cleanup materials are also hazardous and must be sent to either a certified laundry (rags) or disposed of as hazardous waste.
- Never hose down or bury dry material spills. Clean up as much of the material as possible and dispose of properly. See the waste management BMPs in this section for specific information.

Minor Spills

- Minor spills typically involve small quantities of oil, gasoline, paint, etc. which can be controlled by the first responder at the discovery of the spill.
- Use absorbent materials on small spills rather than hosing down or burying the spill.
- Absorbent materials should be promptly removed and disposed of properly.
- Follow the practice below for a minor spill:
  - Contain the spread of the spill.
  - Recover spilled materials.
  - Clean the contaminated area and properly dispose of contaminated materials.

Semi-Significant Spills

- Semi-significant spills still can be controlled by the first responder along with the aid of other personnel such as laborers and the foreman, etc. This response may require the cessation of all other activities.

- Spills should be cleaned up immediately:
  - Contain spread of the spill.
  - Notify the project foreman immediately.
  - If the spill occurs on paved or impermeable surfaces, clean up using "dry" methods (absorbent materials, cat litter and/or rags). Contain the spill by encircling with absorbent materials and do not let the spill spread widely.
  - If the spill occurs in dirt areas, immediately contain the spill by constructing an earthen dike. Dig up and properly dispose of contaminated soil.
  - If the spill occurs during rain, cover spill with tarps or other material to prevent contaminating runoff.

Significant/Hazardous Spills

- For significant or hazardous spills that cannot be controlled by personnel in the immediate vicinity, the following steps should be taken:
  - Notify the local emergency response by dialing 911. In addition to 911, the contractor will notify the proper county officials. It is the contractor's responsibility to have all emergency phone numbers at the construction site.
  - Notify the Governor's Office of Emergency Services Warning Center, (916) 845-8911.
  - For spills of federal reportable quantities, in conformance with the requirements in 40 CFR parts 110,119, and 302, the contractor should notify the National Response Center at (800) 424-8802.
  - Notification should first be made by telephone and followed up with a written report.
  - The services of a spills contractor or a Haz-Mat team should be obtained immediately. Construction personnel should not attempt to clean up until the appropriate and qualified staffs have arrived at the job site.
  - Other agencies which may need to be consulted include, but are not limited to, the Fire Department, the Public Works Department, the Coast Guard, the Highway Patrol, the City/County Police Department, Department of Toxic Substances, California Division of Oil and Gas, Cal/OSHA, etc.

Reporting

- Report significant spills to local agencies, such as the Fire Department; they can assist in cleanup.
- Federal regulations require that any significant oil spill into a water body or onto an adjoining shoreline be reported to the National Response Center (NRC) at 800-424-8802 (24 hours).

Use the following measures related to specific activities:

Vehicle and Equipment Maintenance

- If maintenance must occur onsite, use a designated area and a secondary containment, located away from drainage courses, to prevent the runon of stormwater and the runoff of spills.
- Regularly inspect onsite vehicles and equipment for leaks and repair immediately
- Check incoming vehicles and equipment (including delivery trucks, and employee and subcontractor vehicles) for leaking oil and fluids. Do not allow leaking vehicles or equipment onsite.
- Always use secondary containment, such as a drain pan or drop cloth, to catch spills or leaks when removing or changing fluids.
- Place drip pans or absorbent materials under paving equipment when not in use.
- Use absorbent materials on small spills rather than hosing down or burying the spill. Remove the absorbent materials promptly and dispose of properly.
- Promptly transfer used fluids to the proper waste or recycling drums. Don't leave full drip pans or other open containers lying around
- Oil filters disposed of in trashcans or dumpsters can leak oil and pollute stormwater. Place the oil filter in a funnel over a waste oil-recycling drum to drain excess oil before disposal. Oil filters can also be recycled. Ask the oil supplier or recycler about recycling oil filters.
- Store cracked batteries in a non-leaking secondary container. Do this with all cracked batteries even if you think all the acid has drained out. If you drop a battery, treat it as if it is cracked. Put it into the containment area until you are sure it is not leaking.

Vehicle and Equipment Fueling

- If fueling must occur onsite, use designate areas, located away from drainage courses, to prevent the runon of stormwater and the runoff of spills.
- Discourage "topping off" of fuel tanks.
- Always use secondary containment, such as a drain pan, when fueling to catch spills/ leaks.

Costs

Prevention of leaks and spills is inexpensive. Treatment and/ or disposal of contaminated soil or water can be quite expensive.

Inspection and Maintenance

- Inspect and verify that activity–based BMPs are in place prior to the commencement of associated activities. While activities associated with the BMP are under way, inspect weekly during the rainy season and of two-week intervals in the non-rainy season to verify continued BMP implementation.
- Inspect BMPs subject to non-stormwater discharge daily while non-stormwater discharges occur.

- Keep ample supplies of spill control and cleanup materials onsite, near storage, unloading, and maintenance areas.
- Update your spill prevention and control plan and stock cleanup materials as changes occur in the types of chemicals onsite.

References

Blueprint for a Clean Bay: Best Management Practices to Prevent Stormwater Pollution from Construction Related Activities; Santa Clara Valley Nonpoint Source Pollution Control Program, 1995.

Stormwater Quality Handbooks - Construction Site Best Management Practices (BMPs) Manual, State of California Department of Transportation (Caltrans), November 2000.

Stormwater Management for Construction Activities; Developing Pollution Prevention Plans and Best Management Practice, EPA 832-R-92005; USEPA, April 1992.

Solid Waste Management WM-5

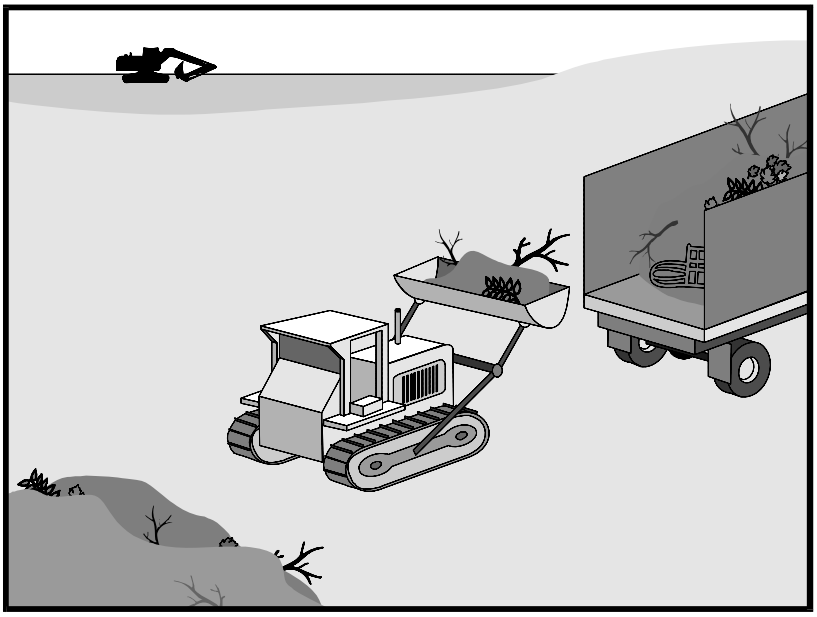

Categories

EC	Erosion Control	
SE	Sediment Control	
TC	Tracking Control	
WE	Wind Erosion Control	
NS	Non-Stormwater Management Control	
WM	Waste Management and Materials Pollution Control	☑

Legend:

☑ **Primary Objective**

☒ **Secondary Objective**

Targeted Constituents

Sediment	☑
Nutrients	☑
Trash	☑
Metals	☑
Bacteria	
Oil and Grease	☑
Organics	☑

Potential Alternatives

None

Description and Purpose

Solid waste management procedures and practices are designed to prevent or reduce the discharge of pollutants to stormwater from solid or construction waste by providing designated waste collection areas and containers, arranging for regular disposal, and training employees and subcontractors.

Suitable Applications

This BMP is suitable for construction sites where the following wastes are generated or stored:

- Solid waste generated from trees and shrubs removed during land clearing, demolition of existing structures (rubble), and building construction
- Packaging materials including wood, paper, and plastic
- Scrap or surplus building materials including scrap metals, rubber, plastic, glass pieces and masonry products
- Domestic wastes including food containers such as beverage cans, coffee cups, paper bags, plastic wrappers, and cigarettes
- Construction wastes including brick, mortar, timber, steel and metal scraps, pipe and electrical cuttings, non-hazardous equipment parts, styrofoam and other materials used to transport and package construction materials
- Highway planting wastes, including vegetative material,

plant containers, and packaging materials

Limitations

Temporary stockpiling of certain construction wastes may not necessitate stringent drainage related controls during the non-rainy season or in desert areas with low rainfall.

Implementation

The following steps will help keep a clean site and reduce stormwater pollution:

- Select designated waste collection areas onsite.
- Inform trash-hauling contractors that you will accept only watertight dumpsters for onsite use. Inspect dumpsters for leaks and repair any dumpster that is not watertight.
- Locate containers in a covered area or in a secondary containment.
- Provide an adequate number of containers with lids or covers that can be placed over the container to keep rain out or to prevent loss of wastes when it is windy.
- Plan for additional containers and more frequent pickup during the demolition phase of construction.
- Collect site trash daily, especially during rainy and windy conditions.
- Remove this solid waste promptly since erosion and sediment control devices tend to collect litter.
- Make sure that toxic liquid wastes (used oils, solvents, and paints) and chemicals (acids, pesticides, additives, curing compounds) are not disposed of in dumpsters designated for construction debris.
- Do not hose out dumpsters on the construction site. Leave dumpster cleaning to the trash hauling contractor.
- Arrange for regular waste collection before containers overflow.
- Clean up immediately if a container does spill.
- Make sure that construction waste is collected, removed, and disposed of only at authorized disposal areas.

Education

- Have the contractor's superintendent or representative oversee and enforce proper solid waste management procedures and practices.
- Instruct employees and subcontractors on identification of solid waste and hazardous waste.
- Educate employees and subcontractors on solid waste storage and disposal procedures.
- Hold regular meetings to discuss and reinforce disposal procedures (incorporate into regular safety meetings).

- Require that employees and subcontractors follow solid waste handling and storage procedures.
- Prohibit littering by employees, subcontractors, and visitors.
- Minimize production of solid waste materials wherever possible.

Collection, Storage, and Disposal

- Littering on the project site should be prohibited.
- To prevent clogging of the storm drainage system, litter and debris removal from drainage grates, trash racks, and ditch lines should be a priority.
- Trash receptacles should be provided in the contractor's yard, field trailer areas, and at locations where workers congregate for lunch and break periods.
- Litter from work areas within the construction limits of the project site should be collected and placed in watertight dumpsters at least weekly, regardless of whether the litter was generated by the contractor, the public, or others. Collected litter and debris should not be placed in or next to drain inlets, stormwater drainage systems, or watercourses.
- Dumpsters of sufficient size and number should be provided to contain the solid waste generated by the project.
- Full dumpsters should be removed from the project site and the contents should be disposed of by the trash hauling contractor.
- Construction debris and waste should be removed from the site biweekly or more frequently as needed.
- Construction material visible to the public should be stored or stacked in an orderly manner.
- Stormwater runon should be prevented from contacting stored solid waste through the use of berms, dikes, or other temporary diversion structures or through the use of measures to elevate waste from site surfaces.
- Solid waste storage areas should be located at least 50 ft from drainage facilities and watercourses and should not be located in areas prone to flooding or ponding.
- Except during fair weather, construction and highway planting waste not stored in watertight dumpsters should be securely covered from wind and rain by covering the waste with tarps or plastic.
- Segregate potentially hazardous waste from non-hazardous construction site waste.
- Make sure that toxic liquid wastes (used oils, solvents, and paints) and chemicals (acids, pesticides, additives, curing compounds) are not disposed of in dumpsters designated for construction debris.
- For disposal of hazardous waste, see WM-6, Hazardous Waste Management. Have hazardous waste hauled to an appropriate disposal and/or recycling facility.

- Salvage or recycle useful vegetation debris, packaging and surplus building materials when practical. For example, trees and shrubs from land clearing can be used as a brush barrier, or converted into wood chips, then used as mulch on graded areas. Wood pallets, cardboard boxes, and construction scraps can also be recycled.

Costs

All of the above are low cost measures.

Inspection and Maintenance

- Inspect and verify that activity–based BMPs are in place prior to the commencement of associated activities. While activities associated with the BMP are under way, inspect weekly during the rainy season and of two-week intervals in the non-rainy season to verify continued BMP implementation.
- Inspect BMPs subject to non-stormwater discharge daily while non-stormwater discharges occur
- Inspect construction waste area regularly.
- Arrange for regular waste collection.

References

Processes, Procedures and Methods to Control Pollution Resulting from All Construction Activity, 430/9-73-007, USEPA, 1973.

Stormwater Quality Handbooks - Construction Site Best Management Practices (BMPs) Manual, State of California Department of Transportation (Caltrans), November 2000.

Stormwater Management for Construction Activities; Developing Pollution Prevention Plans and Best Management Practice, EPA 832-R-92005; USEPA, April 1992.

Hazardous Waste Management WM-6

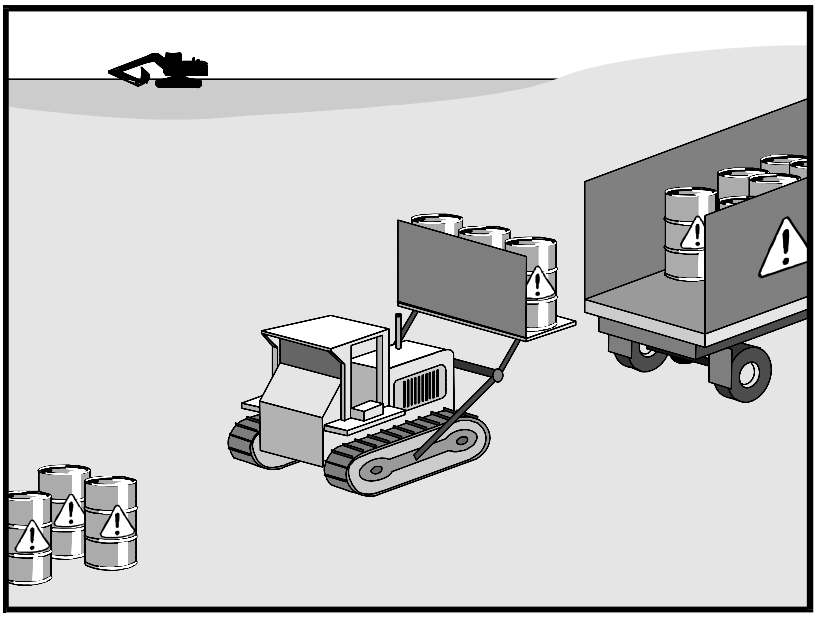

Categories

EC	Erosion Control	
SE	Sediment Control	
TC	Tracking Control	
WE	Wind Erosion Control	
NS	Non-Stormwater Management Control	
WM	Waste Management and Materials Pollution Control	☑

Legend:

☑ **Primary Objective**

☒ **Secondary Objective**

Targeted Constituents

Sediment	
Nutrients	☑
Trash	☑
Metals	☑
Bacteria	☑
Oil and Grease	☑
Organics	☑

Potential Alternatives

None

Description and Purpose

Prevent or reduce the discharge of pollutants to stormwater from hazardous waste through proper material use, waste disposal, and training of employees and subcontractors.

Suitable Applications

This best management practice (BMP) applies to all construction projects. Hazardous waste management practices are implemented on construction projects that generate waste from the use of:

- Petroleum Products
- Concrete Curing Compounds
- Palliatives
- Septic Wastes
- Stains
- Wood Preservatives
- Asphalt Products
- Pesticides
- Acids
- Paints
- Solvents
- Roofing Tar
- Any materials deemed a hazardous waste in California, Title 22 Division 4.5, or listed in 40 CFR Parts 110, 117, 261, or 302

In addition, sites with existing structures may contain wastes, which must be disposed of in accordance with federal, state, and local regulations. These wastes include:

- Sandblasting grit mixed with lead-, cadmium-, or chromium-based paints
- Asbestos
- PCBs (particularly in older transformers)

Limitations

- Hazardous waste that cannot be reused or recycled must be disposed of by a licensed hazardous waste hauler.
- Nothing in this BMP relieves the contractor from responsibility for compliance with federal, state, and local laws regarding storage, handling, transportation, and disposal of hazardous wastes.
- This BMP does not cover aerially deposited lead (ADL) soils. For ADL soils refer to WM-7, Contaminated Soil Management.

Implementation

The following steps will help reduce stormwater pollution from hazardous wastes:

Material Use

- Wastes should be stored in sealed containers constructed of a suitable material and should be labeled as required by Title 22 CCR, Division 4.5 and 49 CFR Parts 172, 173, 178, and 179.
- All hazardous waste should be stored, transported, and disposed as required in Title 22 CCR, Division 4.5 and 49 CFR 261-263.
- Waste containers should be stored in temporary containment facilities that should comply with the following requirements:
  - Temporary containment facility should provide for a spill containment volume equal to 1.5 times the volume of all containers able to contain precipitation from a 25 year storm event, plus the greater of 10% of the aggregate volume of all containers or 100% of the capacity of the largest tank within its boundary, whichever is greater.
  - Temporary containment facility should be impervious to the materials stored there for a minimum contact time of 72 hours.
  - Temporary containment facilities should be maintained free of accumulated rainwater and spills. In the event of spills or leaks, accumulated rainwater and spills should be placed into drums after each rainfall. These liquids should be handled as a hazardous waste unless testing determines them to be non-hazardous. Non-hazardous liquids should be sent to an approved disposal site.
  - Sufficient separation should be provided between stored containers to allow for spill cleanup and emergency response access.

- Incompatible materials, such as chlorine and ammonia, should not be stored in the same temporary containment facility.
- Throughout the rainy season, temporary containment facilities should be covered during non-working days, and prior to rain events. Covered facilities may include use of plastic tarps for small facilities or constructed roofs with overhangs.

- Drums should not be overfilled and wastes should not be mixed.
- Unless watertight, containers of dry waste should be stored on pallets.
- Do not over-apply herbicides and pesticides. Prepare only the amount needed. Follow the recommended usage instructions. Over application is expensive and environmentally harmful. Apply surface dressings in several smaller applications, as opposed to one large application. Allow time for infiltration and avoid excess material being carried offsite by runoff. Do not apply these chemicals just before it rains. People applying pesticides must be certified in accordance with federal and state regulations.
- Paint brushes and equipment for water and oil based paints should be cleaned within a contained area and should not be allowed to contaminate site soils, watercourses, or drainage systems. Waste paints, thinners, solvents, residues, and sludges that cannot be recycled or reused should be disposed of as hazardous waste. When thoroughly dry, latex paint and paint cans, used brushes, rags, absorbent materials, and drop cloths should be disposed of as solid waste.
- Do not clean out brushes or rinse paint containers into the dirt, street, gutter, storm drain, or stream. “Paint out” brushes as much as possible. Rinse water-based paints to the sanitary sewer. Filter and reuse thinners and solvents. Dispose of excess oil-based paints and sludge as hazardous waste.
- The following actions should be taken with respect to temporary contaminant:
  - Ensure that adequate hazardous waste storage volume is available.
  - Ensure that hazardous waste collection containers are conveniently located.
  - Designate hazardous waste storage areas onsite away from storm drains or watercourses and away from moving vehicles and equipment to prevent accidental spills.
  - Minimize production or generation of hazardous materials and hazardous waste on the job site.
  - Use containment berms in fueling and maintenance areas and where the potential for spills is high.
  - Segregate potentially hazardous waste from non-hazardous construction site debris.
  - Keep liquid or semi-liquid hazardous waste in appropriate containers (closed drums or similar) and under cover.

- Clearly label all hazardous waste containers with the waste being stored and the date of accumulation.
- Place hazardous waste containers in secondary containment.
- Do not allow potentially hazardous waste materials to accumulate on the ground.
- Do not mix wastes.
- Use all of the product before disposing of the container.
- Do not remove the original product label; it contains important safety and disposal information.

Waste Recycling Disposal

- Select designated hazardous waste collection areas onsite.
- Hazardous materials and wastes should be stored in covered containers and protected from vandalism.
- Place hazardous waste containers in secondary containment.
- Do not mix wastes, this can cause chemical reactions, making recycling impossible and complicating disposal.
- Recycle any useful materials such as used oil or water-based paint.
- Make sure that toxic liquid wastes (used oils, solvents, and paints) and chemicals (acids, pesticides, additives, curing compounds) are not disposed of in dumpsters designated for construction debris.
- Arrange for regular waste collection before containers overflow.
- Make sure that hazardous waste (e.g., excess oil-based paint and sludge) is collected, removed, and disposed of only at authorized disposal areas.

Disposal Procedures

- Waste should be disposed of by a licensed hazardous waste transporter at an authorized and licensed disposal facility or recycling facility utilizing properly completed Uniform Hazardous Waste Manifest forms.
- A Department of Health Services certified laboratory should sample waste to determine the appropriate disposal facility.
- Properly dispose of rainwater in secondary containment that may have mixed with hazardous waste.
- Attention is directed to "Hazardous Material", "Contaminated Material", and "Aerially Deposited Lead" of the contract documents regarding the handling and disposal of hazardous materials.

Education

- Educate employees and subcontractors on hazardous waste storage and disposal procedures.
- Educate employees and subcontractors on potential dangers to humans and the environment from hazardous wastes.
- Instruct employees and subcontractors on safety procedures for common construction site hazardous wastes.
- Instruct employees and subcontractors in identification of hazardous and solid waste.
- Hold regular meetings to discuss and reinforce hazardous waste management procedures (incorporate into regular safety meetings).
- The contractor's superintendent or representative should oversee and enforce proper hazardous waste management procedures and practices.
- Make sure that hazardous waste is collected, removed, and disposed of only at authorized disposal areas.
- Warning signs should be placed in areas recently treated with chemicals.
- Place a stockpile of spill cleanup materials where it will be readily accessible.
- If a container does spill, clean up immediately.

Costs

All of the above are low cost measures.

Inspection and Maintenance

- Inspect and verify that activity–based BMPs are in place prior to the commencement of associated activities. While activities associated with the BMP are under way, inspect weekly during the rainy season and of two week intervals in the non-rainy season to verify continued BMP implementation.
- Inspect BMPs subject to non-stormwater discharge daily while non-stormwater discharges occur
- Hazardous waste should be regularly collected.
- A foreman or construction supervisor should monitor onsite hazardous waste storage and disposal procedures.
- Waste storage areas should be kept clean, well organized, and equipped with ample cleanup supplies as appropriate for the materials being stored.
- Perimeter controls, containment structures, covers, and liners should be repaired or replaced as needed to maintain proper function.
- Hazardous spills should be cleaned up and reported in conformance with the applicable Material Safety Data Sheet (MSDS) and the instructions posted at the project site.

- The National Response Center, at (800) 424-8802, should be notified of spills of federal reportable quantities in conformance with the requirements in 40 CFR parts 110, 117, and 302. Also notify the Governors Office of Emergency Services Warning Center at (916) 845-8911.
- A copy of the hazardous waste manifests should be provided.

References

Blueprint for a Clean Bay: Best Management Practices to Prevent Stormwater Pollution from Construction Related Activities; Santa Clara Valley Nonpoint Source Pollution Control Program, 1995.

Processes, Procedures and Methods to Control Pollution Resulting from All Construction Activity, 430/9-73-007, USEPA, 1973.

Stormwater Quality Handbooks - Construction Site Best Management Practices (BMPs) Manual, State of California Department of Transportation (Caltrans), November 2000.

Stormwater Management for Construction Activities; Developing Pollution Prevention Plans and Best Management Practice, EPA 832-R-92005; USEPA, April 1992.

Contaminated Soil Management WM-7

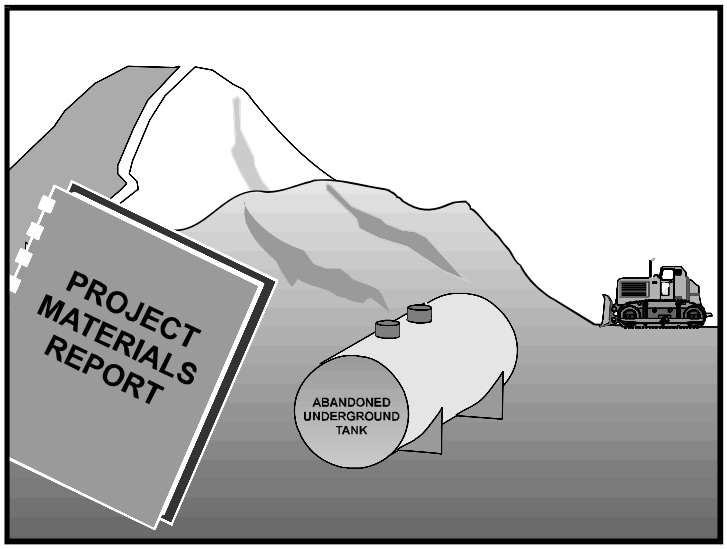

Categories		
EC	Erosion Control	
SE	Sediment Control	
TC	Tracking Control	
WE	Wind Erosion Control	
NS	Non-Stormwater Management Control	
WM	Waste Management and Materials Pollution Control	☑

Legend:
☑ **Primary Objective**
☒ **Secondary Objective**

Targeted Constituents	
Sediment	
Nutrients	☑
Trash	☑
Metals	☑
Bacteria	☑
Oil and Grease	☑
Organics	☑

Potential Alternatives

None

Description and Purpose

Prevent or reduce the discharge of pollutants to stormwater from contaminated soil and highly acidic or alkaline soils by conducting pre-construction surveys, inspecting excavations regularly, and remediating contaminated soil promptly.

Suitable Applications

Contaminated soil management is implemented on construction projects in highly urbanized or industrial areas where soil contamination may have occurred due to spills, illicit discharges, aerial deposition, past use and leaks from underground storage tanks.

Limitations

Contaminated soils that cannot be treated onsite must be disposed of offsite by a licensed hazardous waste hauler. The presence of contaminated soil may indicate contaminated water as well. See NS-2, Dewatering Operations, for more information.

The procedures and practices presented in this BMP are general. The contractor should identify appropriate practices and procedures for the specific contaminants known to exist or discovered onsite.

Implementation

Most owners and developers conduct pre-construction environmental assessments as a matter of routine. Contaminated soils are often identified during project planning and development with known locations identified in the plans, specifications and in the SWPPP. The contractor should review applicable reports and investigate appropriate call-outs in the

plans, specifications, and SWPPP. Recent court rulings holding contractors liable for cleanup costs when they unknowingly move contaminated soil highlight the need for contractors to confirm a site assessment is completed before earth moving begins.

The following steps will help reduce stormwater pollution from contaminated soil:

- Conduct thorough, pre-construction inspections of the site and review documents related to the site. If inspection or reviews indicated presence of contaminated soils, develop a plan before starting work.
- Look for contaminated soil as evidenced by discoloration, odors, differences in soil properties, abandoned underground tanks or pipes, or buried debris.
- Prevent leaks and spills. Contaminated soil can be expensive to treat and dispose of properly. However, addressing the problem before construction is much less expensive than after the structures are in place.
- The contractor may further identify contaminated soils by investigating:
  - Past site uses and activities
  - Detected or undetected spills and leaks
  - Acid or alkaline solutions from exposed soil or rock formations high in acid or alkaline forming elements
  - Contaminated soil as evidenced by discoloration, odors, differences in soil properties, abandoned underground tanks or pipes, or buried debris.
  - Suspected soils should be tested at a certified laboratory.

Education

- Have employees and subcontractors complete a safety training program which meets 29 CFR 1910.120 and 8 CCR 5192 covering the potential hazards as identified, prior to performing any excavation work at the locations containing material classified as hazardous.
- Educate employees and subcontractors in identification of contaminated soil and on contaminated soil handling and disposal procedures.
- Hold regular meetings to discuss and reinforce disposal procedures (incorporate into regular safety meetings).

Handling Procedures for Material with Aerially Deposited Lead (ADL)

- Materials from areas designated as containing (ADL) may, if allowed by the contract special provisions, be excavated, transported, and used in the construction of embankments and/or backfill.
- Excavation, transportation, and placement operations should result in no visible dust.
- Caution should be exercised to prevent spillage of lead containing material during transport.

- Quality should be monitored during excavation of soils contaminated with lead.

Handling Procedures for Contaminated Soils

- Minimize onsite storage. Contaminated soil should be disposed of properly in accordance with all applicable regulations. All hazardous waste storage will comply with the requirements in Title 22, CCR, Sections 66265.250 to 66265.260.
- Test suspected soils at an approved certified laboratory.
- Work with the local regulatory agencies to develop options for treatment or disposal if the soil is contaminated.
- Avoid temporary stockpiling of contaminated soils or hazardous material.
- Take the following precautions if temporary stockpiling is necessary:
  - Cover the stockpile with plastic sheeting or tarps.
  - Install a berm around the stockpile to prevent runoff from leaving the area.
  - Do not stockpile in or near storm drains or watercourses.
- Remove contaminated material and hazardous material on exteriors of transport vehicles and place either into the current transport vehicle or into the excavation prior to the vehicle leaving the exclusion zone.
- Monitor the air quality continuously during excavation operations at all locations containing hazardous material.
- Procure all permits and licenses, pay all charges and fees, and give all notices necessary and incident to the due and lawful prosecution of the work, including registration for transporting vehicles carrying the contaminated material and the hazardous material.
- Collect water from decontamination procedures and treat or dispose of it at an appropriate disposal site.
- Collect non-reusable protective equipment, once used by any personnel, and dispose of at an appropriate disposal site.
- Install temporary security fence to surround and secure the exclusion zone. Remove fencing when no longer needed.
- Excavate, transport, and dispose of contaminated material and hazardous material in accordance with the rules and regulations of the following agencies (the specifications of these agencies supersede the procedures outlined in this BMP):
  - United States Department of Transportation (USDOT)
  - United States Environmental Protection Agency (USEPA)
  - California Environmental Protection Agency (CAL-EPA)

- California Division of Occupation Safety and Health Administration (CAL-OSHA)
- Local regulatory agencies

Procedures for Underground Storage Tank Removals

- Prior to commencing tank removal operations, obtain the required underground storage tank removal permits and approval from the federal, state, and local agencies that have jurisdiction over such work.
- To determine if it contains hazardous substances, arrange to have tested, any liquid or sludge found in the underground tank prior to its removal.
- Following the tank removal, take soil samples beneath the excavated tank and perform analysis as required by the local agency representative(s).
- The underground storage tank, any liquid or sludge found within the tank, and all contaminated substances and hazardous substances removed during the tank removal and transported to disposal facilities permitted to accept such waste.

Water Control

- All necessary precautions and preventive measures should be taken to prevent the flow of water, including ground water, from mixing with hazardous substances or underground storage tank excavations. Such preventative measures may consist of, but are not limited to, berms, cofferdams, grout curtains, freeze walls, and seal course concrete or any combination thereof.
- If water does enter an excavation and becomes contaminated, such water, when necessary to proceed with the work, should be discharged to clean, closed top, watertight transportable holding tanks, treated, and disposed of in accordance with federal, state, and local laws.

Costs

Prevention of leaks and spills is inexpensive. Treatment or disposal of contaminated soil can be quite expensive.

Inspection and Maintenance

- Inspect and verify that activity–based BMPs are in place prior to the commencement of associated activities. While activities associated with the BMP are under way, inspect weekly during the rainy season and of two-week intervals in the non-rainy season to verify continued BMP implementation.
- Arrange for contractor's Water Pollution Control Manager, foreman, and/or construction supervisor to monitor onsite contaminated soil storage and disposal procedures.
- Monitor air quality continuously during excavation operations at all locations containing hazardous material.
- Coordinate contaminated soils and hazardous substances/waste management with the appropriate federal, state, and local agencies.

- Implement WM-4, Spill Prevention and Control, to prevent leaks and spills as much as possible.

References

Blueprint for a Clean Bay: Best Management Practices to Prevent Stormwater Pollution from Construction Related Activities; Santa Clara Valley Nonpoint Source Pollution Control Program, 1995.

Processes, Procedures and Methods to Control Pollution Resulting from All Construction Activity, 430/9-73-007, USEPA, 1973.

Stormwater Quality Handbooks - Construction Site Best Management Practices (BMPs) Manual, State of California Department of Transportation (Caltrans), November 2000.

Stormwater Management for Construction Activities; Developing Pollution Prevention Plans and Best Management Practice, EPA 832-R-92005; USEPA, April 1992.

Concrete Waste Management WM-8

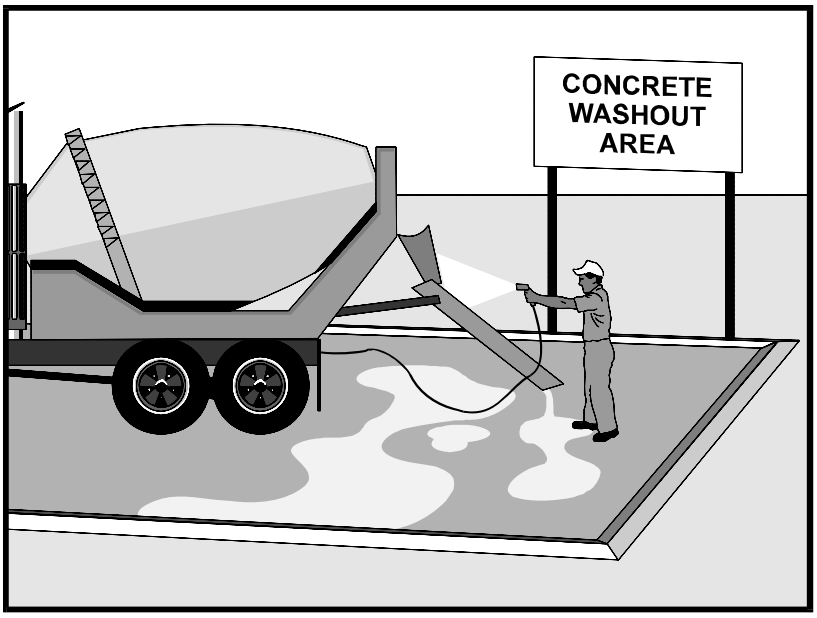

Categories

EC	Erosion Control	
SE	Sediment Control	
TC	Tracking Control	
WE	Wind Erosion Control	
NS	Non-Stormwater Management Control	☒
WM	Waste Management and Materials Pollution Control	☑

Legend:

☑ **Primary Category**

☒ **Secondary Category**

Targeted Constituents

Sediment	☑
Nutrients	
Trash	
Metals	☑
Bacteria	
Oil and Grease	
Organics	

Potential Alternatives

None

Description and Purpose

Prevent the discharge of pollutants to stormwater from concrete waste by conducting washout onsite or offsite in a designated area, and by employee and subcontractor training.

The General Permit incorporates Numeric Effluent Limits (NEL) and Numeric Action Levels (NAL) for pH (see Section 2 of this handbook to determine your project's risk level and if you are subject to these requirements).

Many types of construction materials, including mortar, concrete, stucco, cement and block and their associated wastes have basic chemical properties that can raise pH levels outside of the permitted range. Additional care should be taken when managing these materials to prevent them from coming into contact with stormwater flows and raising pH to levels outside the accepted range.

Suitable Applications

Concrete waste management procedures and practices are implemented on construction projects where:

- Concrete is used as a construction material or where concrete dust and debris result from demolition activities.
- Slurries containing portland cement concrete (PCC) are generated, such as from saw cutting, coring, grinding, grooving, and hydro-concrete demolition.

- Concrete trucks and other concrete-coated equipment are washed onsite.
- Mortar-mixing stations exist.
- Stucco mixing and spraying .
- See also NS-8, Vehicle and Equipment Cleaning.

Limitations

- Offsite washout of concrete wastes may not always be possible.
- Multiple washouts may be needed to assure adequate capacity and to allow for evaporation.

Implementation

The following steps will help reduce stormwater pollution from concrete wastes:

- Incorporate requirements for concrete waste management into material supplier and subcontractor agreements.
- Store dry and wet materials under cover, away from drainage areas. Refer to WM-1, Material Delivery and Storage for more information.
- Avoid mixing excess amounts of concrete.
- Perform washout of concrete trucks in designated areas only, where washout will not reach stormwater.
- Do not wash out concrete trucks into storm drains, open ditches, streets, streams or onto the ground. Trucks should always be washed out into designated facilities.
- Do not allow excess concrete to be dumped onsite, except in designated areas.
- For onsite washout:
  - On larger sites, it is recommended to locate washout areas at least 50 feet from storm drains, open ditches, or water bodies. Do not allow runoff from this area by constructing a temporary pit or bermed area large enough for liquid and solid waste.
  - Washout wastes into the temporary washout where the concrete can set, be broken up, and then disposed properly.
  - Washout should be lined so there is no discharge into the underlying soil.
- Do not wash sweepings from exposed aggregate concrete into the street or storm drain. Collect and return sweepings to aggregate base stockpile or dispose in the trash.
- See typical concrete washout installation details at the end of this fact sheet.

Education

- Educate employees, subcontractors, and suppliers on the concrete waste management techniques described herein.

- Arrange for contractor's superintendent or representative to oversee and enforce concrete waste management procedures.
- Discuss the concrete management techniques described in this BMP (such as handling of concrete waste and washout) with the ready-mix concrete supplier before any deliveries are made.

Concrete Demolition Wastes

- Stockpile concrete demolition waste in accordance with BMP WM-3, Stockpile Management.
- Dispose of or recycle hardened concrete waste in accordance with applicable federal, state or local regulations.

Concrete Slurry Wastes

- PCC and AC waste should not be allowed to enter storm drains or watercourses.
- PCC and AC waste should be collected and disposed of or placed in a temporary concrete washout facility (as described in Onsite Temporary Concrete Washout Facility, Concrete Transit Truck Washout Procedures, below).
- A foreman or construction supervisor should monitor onsite concrete working tasks, such as saw cutting, coring, grinding and grooving to ensure proper methods are implemented.
- Saw-cut concrete slurry should not be allowed to enter storm drains or watercourses. Residue from grinding operations should be picked up by means of a vacuum attachment to the grinding machine or by sweeping. Saw cutting residue should not be allowed to flow across the pavement and should not be left on the surface of the pavement. See also NS-3, Paving and Grinding Operations; and WM-10, Liquid Waste Management.
- Concrete slurry residue should be disposed in a temporary washout facility (as described in Onsite Temporary Concrete Washout Facility, Concrete Transit Truck Washout Procedures, below) and allowed to dry. Dispose of dry slurry residue in accordance with WM-5, Solid Waste Management.

Onsite Temporary Concrete Washout Facility, Transit Truck Washout Procedures

- Temporary concrete washout facilities should be located a minimum of 50 ft from storm drain inlets, open drainage facilities, and watercourses. Each facility should be located away from construction traffic or access areas to prevent disturbance or tracking.
- A sign should be installed adjacent to each washout facility to inform concrete equipment operators to utilize the proper facilities.
- Temporary concrete washout facilities should be constructed above grade or below grade at the option of the contractor. Temporary concrete washout facilities should be constructed and maintained in sufficient quantity and size to contain all liquid and concrete waste generated by washout operations.

- Temporary washout facilities should have a temporary pit or bermed areas of sufficient volume to completely contain all liquid and waste concrete materials generated during washout procedures.
- Temporary washout facilities should be lined to prevent discharge to the underlying ground or surrounding area.
- Washout of concrete trucks should be performed in designated areas only.
- Only concrete from mixer truck chutes should be washed into concrete wash out.
- Concrete washout from concrete pumper bins can be washed into concrete pumper trucks and discharged into designated washout area or properly disposed of or recycled offsite.
- Once concrete wastes are washed into the designated area and allowed to harden, the concrete should be broken up, removed, and disposed of per WM-5, Solid Waste Management. Dispose of or recycle hardened concrete on a regular basis.
- Temporary Concrete Washout Facility (Type Above Grade)
  - Temporary concrete washout facility (type above grade) should be constructed as shown on the details at the end of this BMP, with a recommended minimum length and minimum width of 10 ft; however, smaller sites or jobs may only need a smaller washout facility. With any washout, always maintain a sufficient quantity and volume to contain all liquid and concrete waste generated by washout operations.
  - Materials used to construct the washout area should conform to the provisions detailed in their respective BMPs (e.g., SE-8 Sandbag Barrier).
  - Plastic lining material should be a minimum of 10 mil in polyethylene sheeting and should be free of holes, tears, or other defects that compromise the impermeability of the material.
  - Alternatively, portable removable containers can be used as above grade concrete washouts. Also called a “roll-off”; this concrete washout facility should be properly sealed to prevent leakage, and should be removed from the site and replaced when the container reaches 75% capacity.
- Temporary Concrete Washout Facility (Type Below Grade)
  - Temporary concrete washout facilities (type below grade) should be constructed as shown on the details at the end of this BMP, with a recommended minimum length and minimum width of 10 ft. The quantity and volume should be sufficient to contain all liquid and concrete waste generated by washout operations.
  - Lath and flagging should be commercial type.
  - Plastic lining material should be a minimum of 10 mil polyethylene sheeting and should be free of holes, tears, or other defects that compromise the impermeability of the material.

- The base of a washout facility should be free of rock or debris that may damage a plastic liner.

Removal of Temporary Concrete Washout Facilities

- When temporary concrete washout facilities are no longer required for the work, the hardened concrete should be removed and properly disposed or recycled in accordance with federal, state or local regulations. Materials used to construct temporary concrete washout facilities should be removed from the site of the work and properly disposed or recycled in accordance with federal, state or local regulations..

- Holes, depressions or other ground disturbance caused by the removal of the temporary concrete washout facilities should be backfilled and repaired.

Costs

All of the above are low cost measures. Roll-0ff concrete washout facilities can be more costly than other measures due to removal and replacement; however, provide a cleaner alternative to traditional washouts. The type of washout facility, size, and availability of materials will determine the cost of the washout.

Inspection and Maintenance

- BMPs must be inspected in accordance with General Permit requirements for the associated project type and risk level. It is recommended that at a minimum, BMPs be inspected weekly, prior to forecasted rain events, daily during extended rain events, and after the conclusion of rain events.

- Temporary concrete washout facilities should be maintained to provide adequate holding capacity with a minimum freeboard of 4 in. for above grade facilities and 12 in. for below grade facilities. Maintaining temporary concrete washout facilities should include removing and disposing of hardened concrete and returning the facilities to a functional condition. Hardened concrete materials should be removed and properly disposed or recycled in accordance with federal, state or local regulations.

- Washout facilities must be cleaned, or new facilities must be constructed and ready for use once the washout is 75% full.

- Inspect washout facilities for damage (e.g. torn liner, evidence of leaks, signage, etc.). Repair all identified damage.

References

Blueprint for a Clean Bay: Best Management Practices to Prevent Stormwater Pollution from Construction Related Activities; Santa Clara Valley Nonpoint Source Pollution Control Program, 1995.

Stormwater Quality Handbooks - Construction Site Best Management Practices (BMPs) Manual, State of California Department of Transportation (Caltrans), November 2000, Updated March 2003.

Stormwater Management for Construction Activities; Developing Pollution Prevention Plans and Best Management Practice, EPA 832-R-92005; USEPA, April 1992.

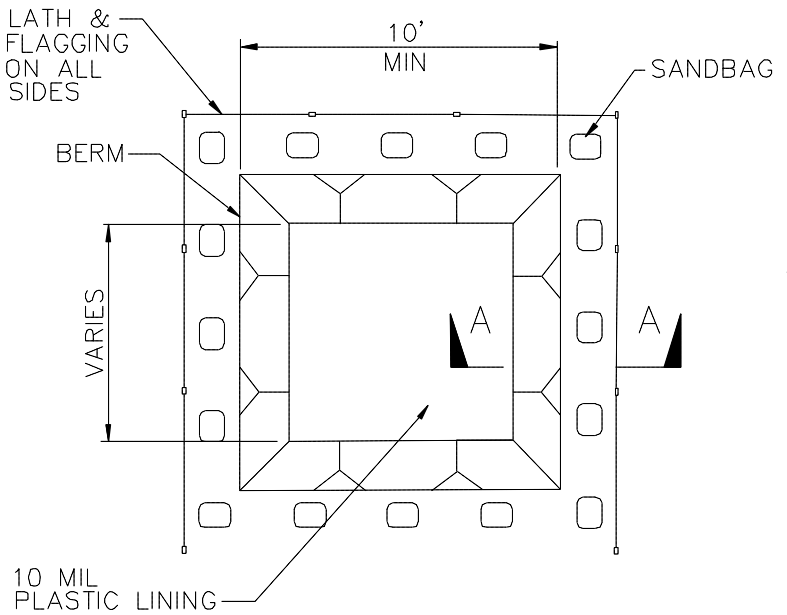

PLAN
NOT TO SCALE
TYPE "BELOW GRADE"

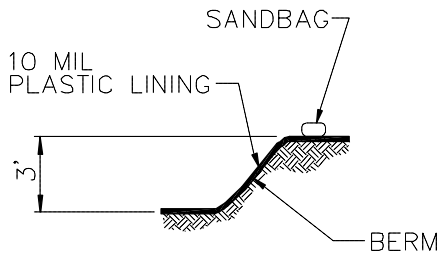

SECTION A–A
NOT TO SCALE

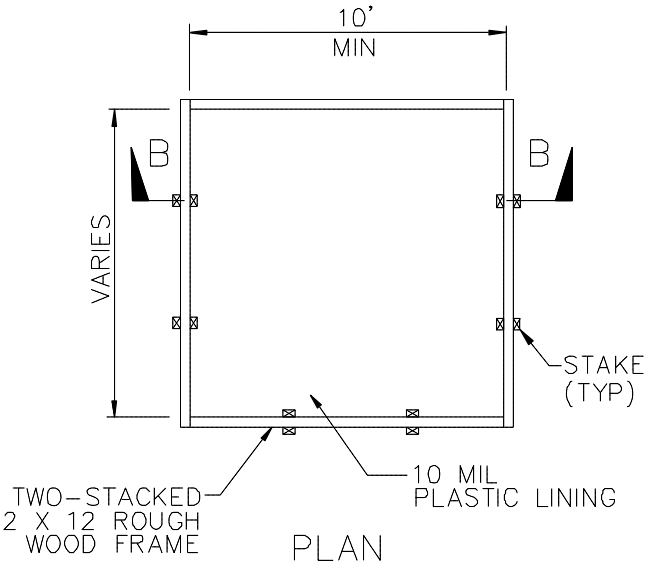

PLAN
NOT TO SCALE
TYPE "ABOVE GRADE"

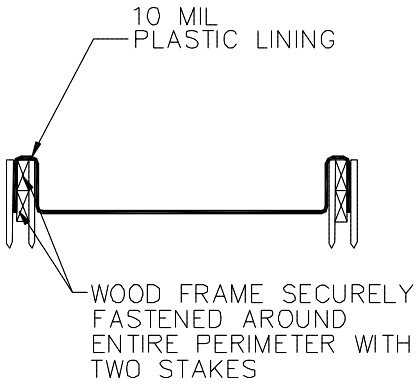

SECTION B–B
NOT TO SCALE

NOTES

1. ACTUAL LAYOUT DETERMINED IN FIELD.
2. THE CONCRETE WASHOUT SIGN SHALL BE INSTALLED WITHIN 30 FT. OF THE TEMPORARY CONCRETE WASHOUT FACILITY.

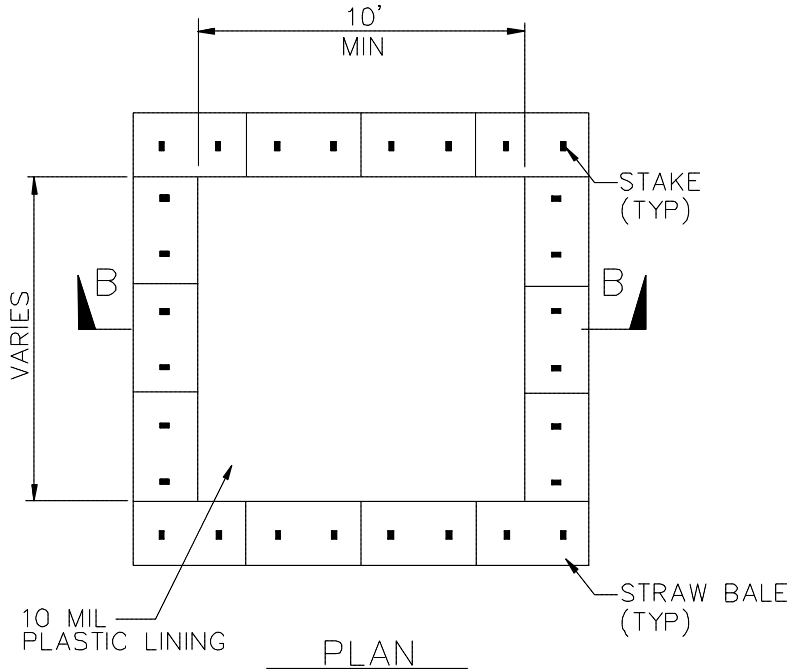

PLAN
NOT TO SCALE
TYPE "ABOVE GRADE"
WITH STRAW BALES

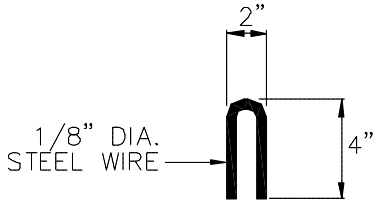

STAPLE DETAIL

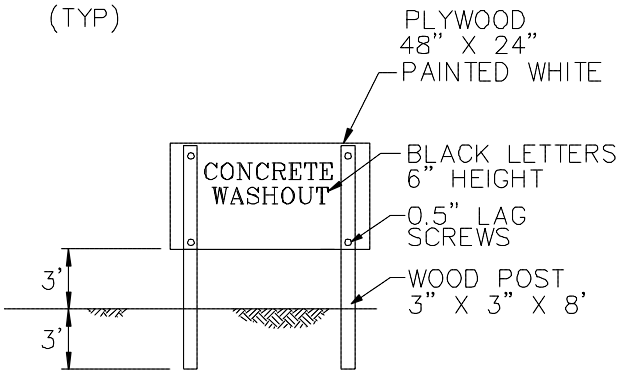

CONCRETE WASHOUT
SIGN DETAIL
(OR EQUIVALENT)

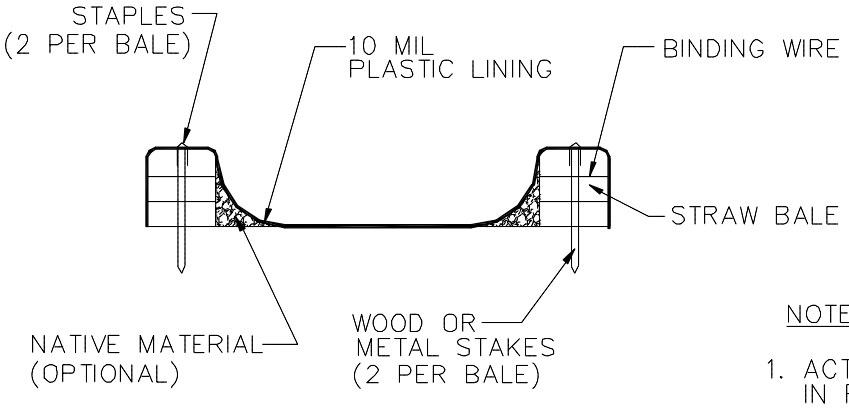

SECTION B–B
NOT TO SCALE

NOTES

1. ACTUAL LAYOUT DETERMINED IN FIELD.
2. THE CONCRETE WASHOUT SIGN SHALL BE INSTALLED WITHIN 30 FT. OF THE TEMPORARY CONCRETE WASHOUT FACILITY.

Sanitary/Septic Waste Management WM-9

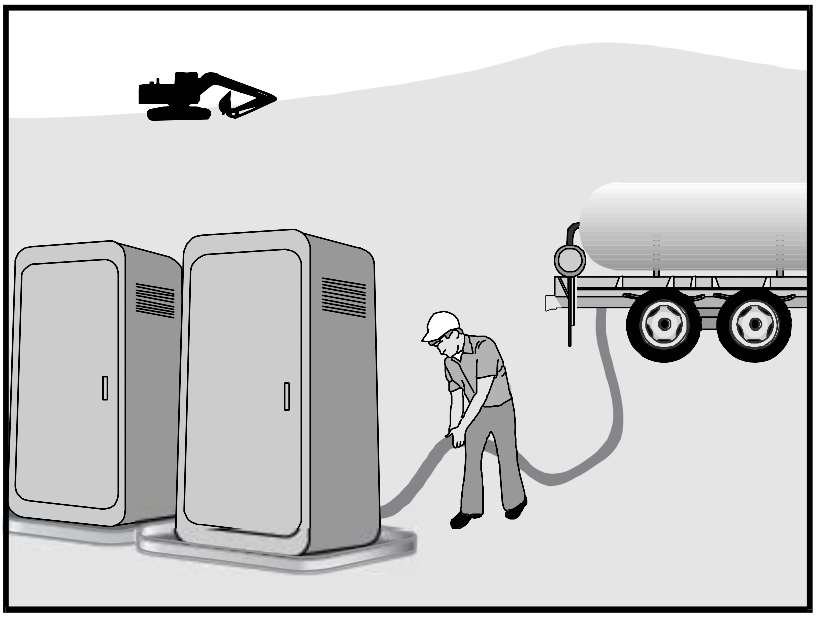

Categories

EC	Erosion Control	
SE	Sediment Control	
TC	Tracking Control	
WE	Wind Erosion Control	
NS	Non-Stormwater Management Control	
WM	Waste Management and Materials Pollution Control	☑

Legend:

☑ **Primary Category**

☒ **Secondary Category**

Targeted Constituents

Sediment	
Nutrients	☑
Trash	☑
Metals	
Bacteria	☑
Oil and Grease	
Organics	☑

Potential Alternatives

None

Description and Purpose

Proper sanitary and septic waste management prevent the discharge of pollutants to stormwater from sanitary and septic waste by providing convenient, well-maintained facilities, and arranging for regular service and disposal.

Suitable Applications

Sanitary septic waste management practices are suitable for use at all construction sites that use temporary or portable sanitary and septic waste systems.

Limitations

None identified.

Implementation

Sanitary or septic wastes should be treated or disposed of in accordance with state and local requirements. In many cases, one contract with a local facility supplier will be all that it takes to make sure sanitary wastes are properly disposed.

Storage and Disposal Procedures

- Temporary sanitary facilities should be located away from drainage facilities, watercourses, and from traffic circulation. If site conditions allow, place portable facilities a minimum of 50 feet from drainage conveyances and traffic areas. When subjected to high winds or risk of high winds, temporary sanitary facilities should be secured to prevent overturning.

- Temporary sanitary facilities must be equipped with containment to prevent discharge of pollutants to the stormwater drainage system of the receiving water.
- Consider safety as well as environmental implications before placing temporary sanitary facilities.
- Wastewater should not be discharged or buried within the project site.
- Sanitary and septic systems that discharge directly into sanitary sewer systems, where permissible, should comply with the local health agency, city, county, and sewer district requirements.
- Only reputable, licensed sanitary and septic waste haulers should be used.
- Sanitary facilities should be located in a convenient location.
- Temporary septic systems should treat wastes to appropriate levels before discharging.
- If using an onsite disposal system (OSDS), such as a septic system, local health agency requirements must be followed.
- Temporary sanitary facilities that discharge to the sanitary sewer system should be properly connected to avoid illicit discharges.
- Sanitary and septic facilities should be maintained in good working order by a licensed service.
- Regular waste collection by a licensed hauler should be arranged before facilities overflow.
- If a spill does occur from a temporary sanitary facility, follow federal, state and local regulations for containment and clean-up.

Education

- Educate employees, subcontractors, and suppliers on sanitary and septic waste storage and disposal procedures.
- Educate employees, subcontractors, and suppliers of potential dangers to humans and the environment from sanitary and septic wastes.
- Instruct employees, subcontractors, and suppliers in identification of sanitary and septic waste.
- Hold regular meetings to discuss and reinforce the use of sanitary facilities (incorporate into regular safety meetings).
- Establish a continuing education program to indoctrinate new employees.

Costs

All of the above are low cost measures.

Inspection and Maintenance

- BMPs must be inspected in accordance with General Permit requirements for the associated project type and risk level. It is recommended that at a minimum, BMPs be inspected weekly, prior to forecasted rain events, daily during extended rain events, and after the conclusion of rain events.
- Arrange for regular waste collection.
- If high winds are expected, portable sanitary facilities must be secured with spikes or weighed down to prevent over turning.
- If spills or leaks from sanitary or septic facilities occur that are not contained and discharge from the site, non-visible sampling of site discharge may be required. Refer to the General Permit or to your project specific Construction Site Monitoring Plan to determine if and where sampling is required.

References

Stormwater Quality Handbooks - Construction Site Best Management Practices (BMPs) Manual, State of California Department of Transportation (Caltrans), March 2003.

Stormwater Management for Construction Activities; Developing Pollution Prevention Plans and Best Management Practice, EPA 832-R-92005; USEPA, April 1992.

Liquid Waste Management WM-10

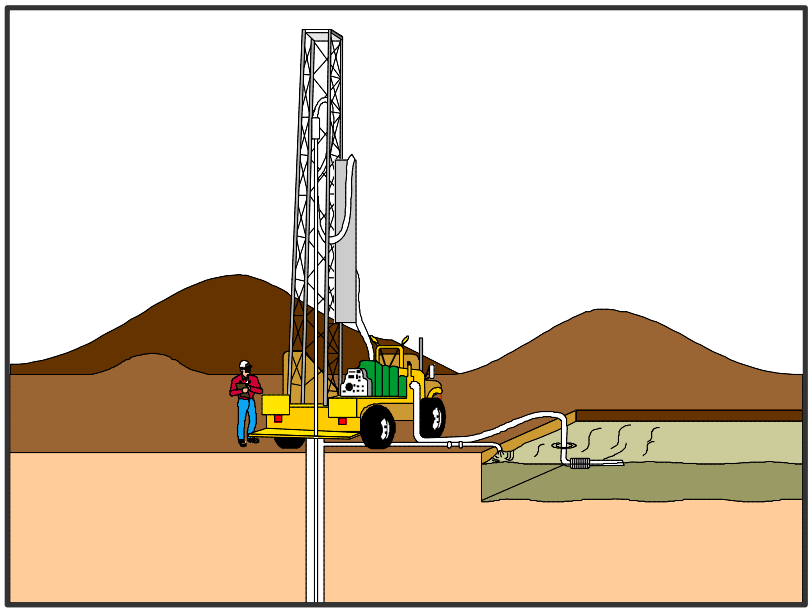

Categories		
EC	Erosion Control	
SE	Sediment Control	
TC	Tracking Control	
WE	Wind Erosion Control	
NS	Non-Stormwater Management Control	
WM	Waste Management and Materials Pollution Control	☑

Legend:
☑ **Primary Objective**
☒ **Secondary Objective**

Targeted Constituents	
Sediment	☑
Nutrients	☑
Trash	☑
Metals	☑
Bacteria	
Oil and Grease	☑
Organics	

Potential Alternatives

None

Description and Purpose

Liquid waste management includes procedures and practices to prevent discharge of pollutants to the storm drain system or to watercourses as a result of the creation, collection, and disposal of non-hazardous liquid wastes.

Suitable Applications

Liquid waste management is applicable to construction projects that generate any of the following non-hazardous by-products, residuals, or wastes:

- Drilling slurries and drilling fluids
- Grease-free and oil-free wastewater and rinse water
- Dredgings
- Other non-stormwater liquid discharges not permitted by separate permits

Limitations

- Disposal of some liquid wastes may be subject to specific laws and regulations or to requirements of other permits secured for the construction project (e.g., NPDES permits, Army Corps permits, Coastal Commission permits, etc.).
- Liquid waste management does not apply to dewatering operations (NS-2 Dewatering Operations), solid waste management (WM-5, Solid Waste Management), hazardous wastes (WM-6, Hazardous Waste Management), or concrete slurry residue (WM-8, Concrete Waste

Management).

- Typical permitted non-stormwater discharges can include: water line flushing; landscape irrigation; diverted stream flows; rising ground waters; uncontaminated pumped ground water; discharges from potable water sources; foundation drains; irrigation water; springs; water from crawl space pumps; footing drains; lawn watering; flows from riparian habitats and wetlands; and discharges or flows from emergency fire fighting activities.

Implementation

General Practices

- Instruct employees and subcontractors how to safely differentiate between non-hazardous liquid waste and potential or known hazardous liquid waste.
- Instruct employees, subcontractors, and suppliers that it is unacceptable for any liquid waste to enter any storm drainage device, waterway, or receiving water.
- Educate employees and subcontractors on liquid waste generating activities and liquid waste storage and disposal procedures.
- Hold regular meetings to discuss and reinforce disposal procedures (incorporate into regular safety meetings).
- Verify which non-stormwater discharges are permitted by the statewide NPDES permit; different regions might have different requirements not outlined in this permit.
- Apply NS-8, Vehicle and Equipment Cleaning for managing wash water and rinse water from vehicle and equipment cleaning operations.

Containing Liquid Wastes

- Drilling residue and drilling fluids should not be allowed to enter storm drains and watercourses and should be disposed of.
- If an appropriate location is available, drilling residue and drilling fluids that are exempt under Title 23, CCR § 2511(g) may be dried by infiltration and evaporation in a containment facility constructed in conformance with the provisions concerning the Temporary Concrete Washout Facilities detailed in WM-8, Concrete Waste Management.
- Liquid wastes generated as part of an operational procedure, such as water-laden dredged material and drilling mud, should be contained and not allowed to flow into drainage channels or receiving waters prior to treatment.
- Liquid wastes should be contained in a controlled area such as a holding pit, sediment basin, roll-off bin, or portable tank.
- Containment devices must be structurally sound and leak free.
- Containment devices must be of sufficient quantity or volume to completely contain the liquid wastes generated.

- Precautions should be taken to avoid spills or accidental releases of contained liquid wastes. Apply the education measures and spill response procedures outlined in WM-4, Spill Prevention and Control.

- Containment areas or devices should not be located where accidental release of the contained liquid can threaten health or safety or discharge to water bodies, channels, or storm drains.

Capturing Liquid Wastes

- Capture all liquid wastes that have the potential to affect the storm drainage system (such as wash water and rinse water from cleaning walls or pavement), before they run off a surface.

- Do not allow liquid wastes to flow or discharge uncontrolled. Use temporary dikes or berms to intercept flows and direct them to a containment area or device for capture.

- Use a sediment trap (SE-3, Sediment Trap) for capturing and treating sediment laden liquid waste or capture in a containment device and allow sediment to settle.

Disposing of Liquid Wastes

- A typical method to handle liquid waste is to dewater the contained liquid waste, using procedures such as described in NS-2, Dewatering Operations, and SE-2, Sediment Basin, and dispose of resulting solids per WM-5, Solid Waste Management.

- Methods of disposal for some liquid wastes may be prescribed in Water Quality Reports, NPDES permits, Environmental Impact Reports, 401 or 404 permits, and local agency discharge permits, etc. Review the SWPPP to see if disposal methods are identified.

- Liquid wastes, such as from dredged material, may require testing and certification whether it is hazardous or not before a disposal method can be determined.

- For disposal of hazardous waste, see WM-6, Hazardous Waste Management.

- If necessary, further treat liquid wastes prior to disposal. Treatment may include, though is not limited to, sedimentation, filtration, and chemical neutralization.

Costs

Prevention costs for liquid waste management are minimal. Costs increase if cleanup or fines are involved.

Inspection and Maintenance

- Inspect and verify that activity–based BMPs are in place prior to the commencement of associated activities. While activities associated with the BMP are under way, inspect weekly during the rainy season and of two-week intervals in the non-rainy season to verify continued BMP implementation.

- Inspect BMPs subject to non-stormwater discharge daily while non-stormwater discharges occur.

- Remove deposited solids in containment areas and capturing devices as needed and at the completion of the task. Dispose of any solids as described in WM-5, Solid Waste Management.
- Inspect containment areas and capturing devices and repair as needed.

References

Stormwater Quality Handbooks - Construction Site Best Management Practices (BMPs) Manual, State of California Department of Transportation (Caltrans), November 2000.

APPENDIX I

Construction Site Inspection Report Form

EARTH RESOURCES INC

STORM WATER CONSTRUCTION SITE SELF-INSPECTION CHECKIST

Project _____ Date _____

Work Order # _____ Time of Inspection _____

WDID No. _____

Inspected By _____ Title _____

Contractor _____

Weather Information

- Best estimate of beginning of storm event: Time _____
- Estimated duration of storm event: _____ Hours _____ Minutes
- Approximate time elapsed since the end of the previous storm: _____ Days _____ Hours
- Estimated amount of rain from the current event: _____ Inches

Check "Yes" or "No" or "N/A" if not applicable.

YES	NO	N/A		
☐	☐	☐	1.	Has there been an absence of rain since the last inspection?
☐	☐	☐	2.	Are all sediment barriers (e.g., sandbags, straw wattles, and silt fences) in place in accordance with the Local SWPPP or ECP and are they functioning properly?
☐	☐	☐	3.	If present, are all exposed slopes protected from erosion through the implementation of acceptable soil stabilization practices?
☐	☐	☐	4.	If present, are all sediment traps/basins installed and functioning properly?

18302 Sierra Hwy #102 Santa Clarita, CA 91351 (800) 554-3205 fax (800) 554-4205

Date:_____
W.O._____

YES	NO	N/A		
☐	☐	☐	5.	Are all material handling and storage areas reasonably clean and free of spills leaks, or other deleterious materials?
☐	☐	☐	6.	Are all equipment storage and maintenance areas reasonably clean and free of spills, leaks, or any other deleterious materials?
☐	☐	☐	7.	Are all materials and equipment properly covered and paints, thinners, and other hazardous liquids in roll offs or other covered containers?
☐	☐	☐	8.	Are all external discharge points (i.e., outfalls) reasonably free of any noticeable pollutant discharges?
☐	☐	☐	9.	Are all internal discharge points (i.e., storm drain inlets) provided with inlet protection?
☐	☐	☐	10.	Are all external discharge points reasonably free of any significant erosion or sediment transport?
☐	☐	☐	11.	Are all BMPs identified on the Plan installed in the proper location and according to the specifications for the plan (based on current site conditions)?
☐	☐	☐	12.	Are existing BMPs being maintained properly?
☐	☐	☐	13.	Are all on-site traffic routes, parking, and storage of equipment and supplies restricted to areas designated in the Plan for those uses?
☐	☐	☐	14.	Are all locations of temporary soil stockpiles or construction materials in approved areas?
☐	☐	☐	15.	Are all seeded or landscaped areas properly maintained?

Date:_____
W.O._____

YES	NO	N/A		
☐	☐	☐	16.	Are sediment treatment controls in place at discharge points from the site?
☐	☐	☐	17.	If present, are slopes free of significant erosion?
☐	☐	☐	18.	Are all points of ingress and egress from the site provided with stabilized construction entrances (including access to washout and storage areas)?
☐	☐	☐	19.	Is sediment, debris, or mud being cleaned from public roads at intersections with site access roads?
☐	☐	☐	20.	Are all lime, cement, fertilizer, gypsum, and other bagged products adequately covered on pallets or placed inside covered garages or roll offs?
☐	☐	☐	21.	Are all portable toilets located off streets and sidewalks?
☐	☐	☐	22.	Are there any BMP's or concerns on the project that are not covered by the above? Explain _____

If you answered "no" to any of the questions on the previous pages, except Number 1, describe any corrective action(s) that have been performed, or that must be taken, to remedy the problem and when the corrective action is to be completed:

_____
_____
_____
_____
_____
_____
_____
_____

Date:_____
W.O._____

Additional Comments

Risk Level 1, 2, 3
Visual Inspection Field Log Sheet

Date and Time of Inspection:	Report Date:

Inspection Type:	☐ Weekly	☐ Before predicted rain	☐ During rain event	☐ Following qualifying rain event	☐ Contained stormwater release	☐ Quarterly non-stormwater

Site Information

Construction Site Name:	
Construction stage and completed activities:	Approximate area of exposed site:

Weather and Observations

Date Rain Predicted to Occur:	Predicted % chance of rain:

Estimate storm beginning: _____ (date and time)	Estimate storm duration:_____ (hours)	Estimate time since last storm: _____ (days or hours)	Rain gauge reading: _____ (inches)

Observations: If yes identify location		
Odors	Yes ☐	No ☐
Floating material	Yes ☐	No ☐
Suspended Material	Yes ☐	No ☐
Sheen	Yes ☐	No ☐
Discolorations	Yes ☐	No ☐
Turbidity	Yes ☐	No ☐

Site Inspections

Outfalls or BMPs Evaluated	Deficiencies Noted
(add additional sheets or attached detailed BMP Inspection Checklists)	

Photos Taken:	Yes ☐	No ☐	Photo Reference IDs:

Corrective Actions Identified (note if SWPPP/REAP change is needed)

Inspector Information

Inspector Name:	Inspector Title:
Signature:	Date:

EARTH RESOURCES INC

Rainfall Log

Project: _____ WDID No. _____ERI WO. _____

Starting Date	Ending Date	Time	Inches Rainfall	Recorded By:

18302 Sierra Hwy #102 Santa Clarita, CA 91351 (800) 554-3205 (800) 554-4205

APPENDIX J

Example Rain Event Action Plan

BLANK-RISK LEVEL 1 PROJECT

APPENDIX K

Training Report Form

EARTH RESOURCES INC

STORM WATER POLLUTION PREVENTION EMPLOYEE AND SUBCONTRACTOR TRAINING RECORD

Date of Meeting:_____ **Time:**_____

Location:_____

Speaker (s):_____

Topics:_____

_____

_____

Employee/Subcontractor Name (Print)	Company	Signature

18302 Sierra Hwy #102 Santa Clarita, CA 91351 (800) 554-3205 Fax: (800) 554-4205

ACTIVITY: EMPLOYEE/SUBCONTRACTOR TRAINING

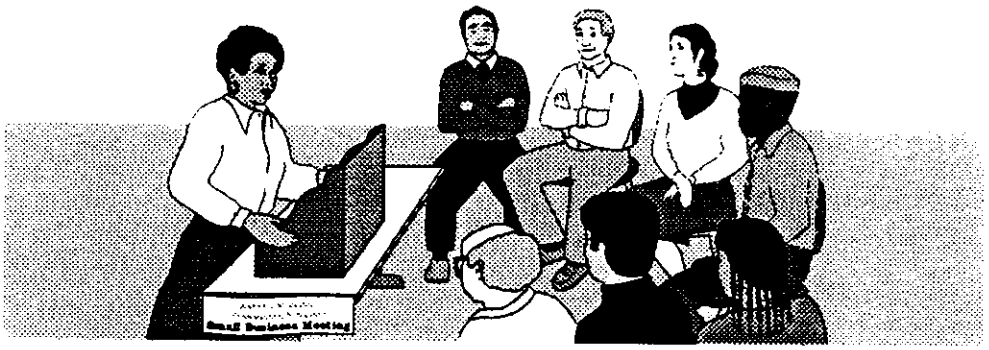

Objectives

- *Housekeeping Practices*
- *Contain Waste*
- *Minimize Disturbed Areas*
- *Stabilize Disturbed Areas*
- *Protect Slopes/Channels*
- *Control Site Perimeter*
- *Control Internal Erosion*

DESCRIPTION

Employee/subcontractor training, like maintenance or a piece of equipment, is not so much a best management practice as it is a method by which to implement BMPs. This fact sheet highlights the importance of training and of integrating the elements of employee/subcontractor training from the individual source controls into a comprehensive training program as part of a company's Storm Water Pollution Prevention Plan (SWPPP).

The specific employee/subcontractor training aspects of each of the source controls are highlighted in the individual fact sheets. The focus of this fact sheet is more general, and includes the overall objectives and approach for assuring employee/subcontractor training in storm water pollution prevention. Accordingly, the organization of this fact sheet differs somewhat from the other fact sheets in this chapter.

OBJECTIVES

Employee/subcontractor training should be based on four objectives:

- Promote a clear identification and understanding of the problem, including activities with the potential to pollute storm water;
- Identify solutions (BMPs);
- Promote employee/subcontractor ownership of the problems and the solutions; and
- Integrate employee/subcontractor feedback into training and BMP implementation.

APPROACH

- Integrate training regarding storm water quality management with existing training programs that may be required for your business by other regulations such as: the Illness and Injury Prevention Program (IIPP) (SB 198) (California Code of Regulations Title 8, Section 3203), the Hazardous Waste Operations and Emergency Response (HAZWOPER) standard (29 CFR 1910.120), the Spill Prevention Control and Countermeasure (SPCC) Plan (40 CFR 112), and the Hazardous Materials Management Plan (Business Plan) (California Health and Safety Code, Section 6.95).
- Businesses, particularly smaller ones that may not be regulated by Federal, State, or local regulations, may use the information in this Handbook to develop a training program to reduce their potential to pollute storm water.
- Use the quick reference on disposal alternatives (Table 4.2) to train employee/subcontractors in proper and consistent methods for disposal.

CA40

Best Management Practices

ACTIVITY: EMPLOYEE/SUBCONTRACTOR TRAINING (Continue)

- Consider posting the quick reference table around the job site or in the on-site office trailer to reinforce training.
- Train employee/subcontractors in standard operating procedures and spill cleanup techniques described in the fact sheets. Employee/subcontractors trained in spill containment and cleanup should be present during the loading/ unloading and handling of materials.
- Personnel who use pesticides should be trained in their use. The California Department of Pesticide Regulation and county agricultural commissioners license pesticide dealers, certify pesticide applicators, and conduct on-site inspections.
- Proper education of off-site contractors is often overlooked. The conscientious efforts of well trained employee/ subcontractors can be lost by unknowing off-site contractors, so make sure they are well informed about what they are expected to do on-site.

CA40

Best Management Practices

APPENDIX L

Responsible Parties

Legally Responsible Person (LRP)

Mr. Craig Knickerbocker
Knickerbocker & Associates
827 Deep Valley Drive #100
Rolling Hills Estates, CA 90274

Phone (310) 541-9022
Email: cknickerbocker@knickerbockerassoc.com

Site Superintendent

Mr. Craig Knickerbocker
Knickerbocker & Associates
827 Deep Valley Drive #100
Rolling Hills Estates, CA 90274

Phone (310) 541-9022
Email: cknickerbocker@knickerbockerassoc.com

Project Civil Engineer & Survey

Mr. Bob Quinn
R.T. Quinn & Associates
1907 Border Ave
Torrance, CA 90501

Phone: (310) 320-4125

Qualified SWPPP Developer (QSD)

Joseph A. Cota
Earth Resources Inc.
18302 Sierra Hwy #102
Santa Clarita, CA 91351

Phone: (800) 554-3205
Cell: (661) 714-5598
Email: joe@radiusmaps.net

Qualified SWPPP Practitioner (QSP)

To be determined prior to the start of grading and construction

APPENDIX M

Contractors and Subcontractors

NOTE: Subcontractor information was not available at the time of this SWPPP Preparation. The list of Contractors should be added as soon as available.

Additional subcontractors should be added to this List as necessary

(add more pages as necessary)

Trade: _____

Company:_____

Contact Person:_____

Address:_____

_____

_____

Phone:_____

Emergency Contact:_____

Trade: _____

Company:_____

Contact Person:_____

Address:_____

_____

_____

Phone:_____

Emergency Contact:_____

APPENDIX N

Construction Site Monitoring Program

The construction site monitoring program for this project is presented in Sections 7.1 through 7.10 of the SWPPP. Modifications to the CSPM and Sampling Records and Test Results should be added to Appendix N as they become available.

APPENDIX O

EPA Test Methods and Chain of Custody

AMERICAN ANALYTICS CHAIN-OF-CUSTODY RECORD

9765 ETON AVE., CHATSWORTH, CA 91311
Tel: 818-998-5547 FAX: 818-998-7258

A.A. COC No.:

Page ____ of ____

Client:	Project Name / No.:	Sampler's Name:
Project Manager:	Site Address:	Sampler's Signature:
Phone:	City:	P.O. No.:
Fax:	State & Zip:	Quote No.:

TAT Turnaround Codes **

(1) = Same Day Rush
(2) = 24 Hour Rush
(3) = 48 Hour Rush
(4) = 72 Hour Rush
(5) = 5 Day Rush
X = 10 Working Days (Standard TAT)

ANALYSIS REQUESTED (Test Name)

Please enter the TAT Turnaround Codes ** below

Client I.D.	A.A. I.D.	Date	Time	Sample Matrix	No. of Cont											Special Instructions

For Laboratory Use	Relinquished by	Date	Time	Received by
	Relinquished by	Date	Time	Received by
A.A. Project No.:	Relinquished by	Date	Time	Received by

Note: By relinquishing samples to American Analytics, client agrees to pay for the services requested on this chain of custody form and any additional client-requested analyses performed on this project. Payment for services is due within 30 days from the date of invoice. Sample(s) will be disposed of after 45 days following the submittal of the sample(s) to American Analytics.

Appendix O

Sample Collection, Preservation and Analysis for Monitoring Non-Visible Pollutants

Constituent	Analytical Method	Minimum Sample Volume	Sample Bottle	Sample Preservation	Reporting Limit	Maximum Holding Time
Sediment	EPA 180.1 and 160.2	1L	Plastic	None	Turbidity 0.1 NTU TSS 10mg/L	48 hrs
Ph	EPA 150.1 and 120.1	1L	Plastic	None	Ph 1-14	24 hrs
Oil & Grease	EPA 1664	1L	Amber Glass	Hydrochloric Acid	0.5 mg/L	28 days
Solvents	EPA 8260	120 ml (total)	40 ml borosilicate	Hydrochloric Acid	0.5 ppb to 10 ppb	14 days
Diesel Fuel	EPA 8015	120 ml (total)	40 ml borosilicate	Hydrochloric Acid	0.5 mg/L	14 days
Gasoline	EPA 8015	120 ml (total)	40 ml borosilicate	Hydrochloric Acid	0.05 mg/L	48 hrs
Surfactants, soaps, detergents, etc.	EPA 425.1	500 ml	Plastic	None	0.1 mg/L	48 hrs
Pesticides	EPA 8081	1L	Amber Glass	None	0.01 ppb to 2.5 ppb	7 days
Nitrates	EPA 300.0	1L	Plastic	None	1 ppm	48 hrs
Fecal Coliform	EPA 9221E	125 ml	Plastic	5 mg sodium thiosulfate tablet		6 hrs
Metals (Cu, Pb, Zn, etc.)	EPA 6000/7000	500 ml	Plastic	Nitric acid	Variable	6 months
Unknown/Unanticipated	Variable	1L	Amber Glass	None	Variable	2-4 hrs.
Notes:						

Attachment S
Pollutant Testing Guidance Table [1]

Category	Construction Site Material	Visually Observable?	Pollutant Indicators [2]	Suggested Analyses Field [3]	Laboratory
Asphalt Products	Hot Asphalt	Yes - Rainbow Surface or Brown Suspension	Visually Observable - No Testing Required		
	Asphalt Emulsion				
	Liquid Asphalt (tack coat)				
	Cold Mix				
	Crumb Rubber	Yes – Black, solid material	Visually Observable - No Testing Required		
	Asphalt Concrete (Any Type)	Yes - Rainbow Surface or Brown Suspension	Visually Observable - No Testing Required		
Cleaning Products	Acids	No	**pH** Acidity Anions (acetic acid, phosphoric acid, sulfuric acid, nitric acid, hydrogen chloride)	pH Meter Acidity Test Kit	EPA 150.1 (pH)
					SM 2310B (Acidity)
					EPA 300.0 (Anion)
	Bleaches	No	Residual Chlorine	Chlorine	SM 4500-CL G (Res. Chlorine)
	Detergents	Yes - Foam	Visually Observable - No Testing Required		
	TSP	No	***Phosphate***	Phosphate	EPA 365.3 (Phosphate)
	Solvents	No	**VOC**	None	EPA 601/602 or EPA 624 (VOC)
			SVOC	None	EPA 625 (SVOC)

Attachment S
Pollutant Testing Guidance Table [1]

Category	Construction Site Material	Visually Observable?	Pollutant Indicators [2]	Suggested Analyses Field [3]	Laboratory
Portland Concrete Cement & Masonry Products	Portland Cement (PCC)	Yes - Milky Liquid	Visually Observable - No Testing Required		
	Masonry products	No	**pH**	pH Meter Alkalinity or Acidity Test Kit	EPA 150.1 (pH)
			Alkalinity		SM 2320 (Alkalinity)
	Sealant (Methyl Methacrylate - MMA)	No	Methyl Methacrylate	None	EPA 625 (SVOC)
			Cobalt		EPA 200.8 (Metal)
			Zinc		
	Incinerator Bottom Ash Bottom Ash Steel Slag Foundry Sand Fly Ash Municipal Solid Waste	No	**Aluminum** **Calcium** **Vanadium** **Zinc**	Calcium Test	EPA 200.8 (Metal) EPA 200.7 (Calcium)
	Mortar	Yes - Milky Liquid	Visually Observable - No Testing Required		
	Concrete Rinse Water	Yes - Milky Liquid	Visually Observable - No Testing Required		
	Non-Pigmented Curing Compounds	No	Acidity	pH Meter Alkalinity or Acidity Test Kit	SM 2310B (Acidity)
			Alkalinity		SM 2320 (Alkalinity)
			pH		EPA 150.1 (pH)
			VOC		EPA 601/602 or EPA 624 (VOC)
			SVOC		EPA 625 (SVOC)

Attachment S
Pollutant Testing Guidance Table [1]

Category	Construction Site Material	Visually Observable?	Pollutant Indicators [2]	Suggested Analyses Field [3]	Laboratory
Landscaping and Other Products	Aluminum Sulfate	No	Aluminum	TDS Meter Sulfate	EPA 200.8 (Metal)
			TDS		EPA 160.1 (TDS)
			Sulfate		EPA 300.0 (Sulfate)
	Sulfur-Elemental	No	Sulfate	Sulfate	EPA 300.0 (Sulfate)
	Fertilizers-Inorganic [4]	No	Nitrate	Nitrate	EPA 300.0 (Nitrate)
			Phosphate	Phosphate	EPA 365.3 (Phosphate)
			Organic Nitrogen	None	EPA 351.3 (TKN)
			Potassium	None	EPA 200.8 (Metal)
	Fertilizers-Organic	No	TOC	Nitrate	EPA 415.1 (TOC)
			Nitrate		EPA 300.0 (Nitrate)
			Organic Nitrogen		EPA 351.3 (TKN)
			COD		EPA 410.4 (COD)
	Natural Earth (Sand, Gravel, and Topsoil)	Yes - Cloudiness and turbidity	Visually Observable - No Testing Required		
	Herbicide	No	Herbicide	None	Check lab for specific herbicide or pesticide
	Pesticide		**Pesticide**		
	Lime		Alkalinity	pH Meter Alkalinity or Acidity Test Kit	SM 2320 (Alkalinity)
			pH		EPA 150.1 (pH)
Painting Products	Paint	Yes	Visually Observable - No Testing Required		

Attachment S
Pollutant Testing Guidance Table [1]

Category	Construction Site Material	Visually Observable?	Pollutant Indicators [2]	Suggested Analyses Field [3]	Laboratory
	Paint Strippers	No	VOC	None	EPA 601/602 or EPA 624 (VOC)
			SVOC	None	EPA 625 (SVOC)
	Resins	No	COD	None	EPA 410.4 (COD)
			SVOC		EPA 625 (SVOC)
	Sealants	No	COD	None	EPA 410.4 (COD)
	Solvents	No	COD	None	EPA 410.4 (COD)
			VOC		EPA 601/602 or EPA 624 (VOC)
			SVOC		EPA 625 (SVOC)
	Lacquers, Varnish, Enamels, and Turpentine	No	COD	None	EPA 410.4 (COD)
			VOC		EPA 601/602 or EPA 624 (VOC)
			SVOC		EPA 625 (SVOC)
	Thinners	No	VOC	None	EPA 601/602 or EPA 624 (VOC)
			COD		EPA 410.4 (COD)
Portable Toilet Waste Products	Portable Toilet Waste	Yes	Visually Observable - No Testing Required		
Contaminated Soil [5]	Aerially Deposited Lead[3]	No	***Lead***	None	EPA 200.8 (Metal)

Attachment S
Pollutant Testing Guidance Table [1]

Category	Construction Site Material	Visually Observable?	Pollutant Indicators [2]	Suggested Analyses Field [3]	Laboratory
	Petroleum	Yes – Rainbow Surface Sheen and Odor	Visually Observable - No Testing Required		
	Other	No	Contaminant Specific	Contaminant Specific	Contaminant Specific
Line Flushing Products	Chlorinated Water	No	Total chlorine	Chlorine	SM 4500-CL G (Res. Chlorine)
Adhesives	Adhesives	No	COD	None	EPA 410.4 (COD)
			Phenols	Phenol	EPA 420.1 (Phenol)
			SVOC	None	EPA 625 (SVOC)
Dust Palliative Products	Salts (Magnesium Chloride, Calcium Chloride, and Natural Brines)	No	Chloride	Chloride	EPA 300.0 (Chloride)
			TDS	TDS Meter	EPA 160.1 (TDS)
			Cations (Sodium, Magnesium, Calcium)	None	EPA 200.7 (Cations)
Vehicle	Antifreeze and Other Vehicle Fluids	Yes - Colored Liquid	Visually Observable - No Testing Required		
	Batteries	No	Sulfuric Acid	None	EPA 300.0 (Sulfate)
			Lead	None	EPA 200.8 (Metal)
			pH	pH Meter Alkalinity or Acidity Test Kit	EPA 150.1 (pH)
	Fuels, Oils, Lubricants	Yes - Rainbow Surface Sheen and Odor	Visually Observable - No Testing Required		

Attachment S
Pollutant Testing Guidance Table [1]

Category	Construction Site Material	Visually Observable?	Pollutant Indicators [2]	Suggested Analyses Field [3]	Laboratory
Soil Amendment/Stabilization Products	Polymer/Copolymer [6, 7]	No	Organic Nitrogen	None	EPA 351.3 (TKN)
			BOD	None	EPA 405.1 (BOD)
			COD	None	EPA 410.4 (COD)
			DOC	None	EPA 415.1 (DOC)
			Nitrate	Nitrate	EPA 300.0 (Nitrate)
			Sulfate	Sulfate	EPA 300.0 (Sulfate)
			Nickel	None	EPA 200.8 (Metal)
	Straw/Mulch	Yes - Solids	Visually Observable - No Testing Required		
	Lignin Sulfonate	No	Alkalinity	Alkalinity	SM 2320 (Alkalinity)
			TDS	TDS Meter	EPA 160.1 (TDS)
	Psyllium	No	COD	None	EPA 410.4 (COD)
			TOC		EPA 415.1 (TOC)
	Guar/Plant Gums	No	COD	None	EPA 410.4 (COD)
			TOC		EPA 415.1 (TOC)
			Nickel		EPA 200.8 (Metal)
	Gypsum	No	pH	pH Meter Alkalinity or Acidity Test Kit	EPA 150.1 (pH)
			Calcium	Calcium	EPA 200.7 (Calcium)
			Sulfate	Sulfate	EPA 300.0 (Sulfate)
			Aluminum	None	EPA 200.8 (Metal)
			Barium		
			Manganese		
			Vanadium		
Treated Wood		No	Arsenic	Total Chromium	EPA 200.8 (Metal)

Attachment S
Pollutant Testing Guidance Table [1]

Category	Construction Site Material	Visually Observable?	Pollutant Indicators [2]	Suggested Analyses Field [3]	Laboratory
Products	Ammoniacal-Copper-Zinc-Arsenate (ACZA) Copper-Chromium-Arsenic (CCA) Ammoniacal-Copper-Arsenate (ACA) Copper Naphthenate		Total Chromium Copper Zinc		
	Creosote	Yes - Rainbow Surface or Brown Suspension	Visually Observable - No Testing Required		

Notes:

1. 1 If specific pollutant is known, analyze only for that specific pollutant. See MSDS to verify.
2. For each construction material, test for one of the pollutant indicators. Bolded pollutant indicates lowest analysis cost or best indicator. However, the composition of the specific construction material, if known, is the first criterion for selecting which analysis to use.
3. See www.hach.com, www.lamotte.com, www.ysi.com and www.chemetrics.com for some of the test kits
4. If the type of inorganic fertilizer is unknown, analyze for all pollutant indicators listed.
5. Only if special handling requirements are required in the contract documents for aerially deposited lead (ADL)
6. If used with a dye or fiber matrix, it is considered visually observable and no testing is required.
7. Based upon research conducted by the State of California Department of Transportation (Caltrans), the following copolymers/polymers do not discharge pollutants and water quality sampling and analysis is **not** required: Super Tak™, M-Binder™, Fish Stik™, Pro40dc™, Fisch-Bond™, and Soil Master WR™.